2006
Liberty
(KJ)

Mopar PARTS

Jeep

CHRYSLER • PLYMOUTH • DODGE • JEEP

THE MOPAR DIFFERENCE

2006
Liberty
KJ

VIN PLATE DECODING INFORMATION

VIN_POS	LONG_DESC	CODE	CODE_DESCRIPTION
1	Country of Origin	1	Built in U.S. by DaimlerChrysler Corporation
2	Assembler	J	Jeep
3	Vehicle Type	4	Multipurpose Passenger Vehicle Less Side Air Bags
4	GVWR & Pass. Safety	E	1361-1814 kg (3001-4000 lbs)
		F	1814-2267 kg (4001-5000 lbs)
		G	2268-2721 kg (5001-6000 lbs)
		H	2722-3175 kg (6001-7000 lbs)
		J	3176-3628 kg (7001-8000 lbs)
		K	3629-4082 kg (8001-9000 lbs)
		L	4083-4535 kg (9001-10000 lbs)
		M	4536-6350 kg (10001-14000 lbs)
5	Vehicle Line	K	Liberty 4x2 Left Hand Drive
		L	Liberty/Cherokee 4x4 Left Hand Drive
		M	Liberty/Cherokee 4x4 Right Hand Drive
6	Series	4	H Series - Liberty/Cherokee Sport
		3	M Series - Liberty Renegade
		5	P Series - Liberty/Cherokee Limited
7	Body Style	8	KJ - 74
8	Engine	1	2.4L I4 Cyl. Gas DOHC (ED1)
		7	2.5L I4 Cyl. 16V Turbo Diesel (ENJ)
		5	2.8L I4 Cyl. 16V Turbo Diesel (ENR)
		K	3.7L V6 Cyl. Gas (EKG)
9	Check Digit		Check Digit
10	Model Year	6	2006
11	Assembly Plant	L	Toledo North Assembly
12 thru 17	Vehicle Build Sequence		Model Year Assembly Sequence

Group – 001

Component Parts for Mopar Accessories

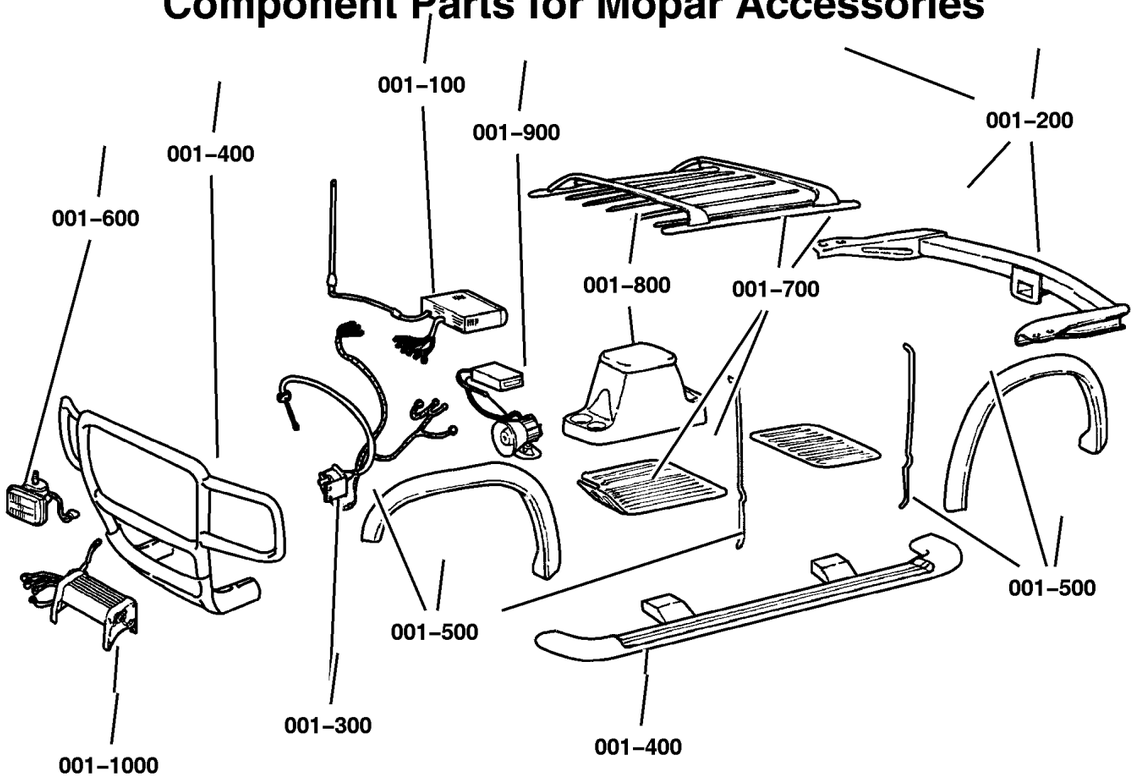

001–100 Audio & Electronics 	**001–200** Carriers & Cargo Hauling 	**001–300** Driving Convenience 	**001–400** Exterior Appearance 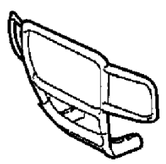
001–500 Exterior Protection 	**001–600** Fog Lights & Electrical 	**001–800** Interior Storage 	

GROUP 1 - Component Parts for Mopar Accessories

Illustration Title — Group-Fig. No.

Audio & Electronics
Player Kit - CD Changer . . . . . Fig. 001-110
Satellite Receiver Kit . . . . . Fig. 001-120
Install Kit - Sattelite Receiver Without CD Changer . . . . . Fig. 001-130
Install Kit - Satellite Receiver With CD . . . . . Fig. 001-135
Navigation Kit (RB1) . . . . . Fig. 001-140
Navigation Kit (RB4) . . . . . Fig. 001-145

Carriers & Cargo Hauling
Bike Carrier - Roof - Fork Mount . . . . . Fig. 001-210
Bike Carrier - Roof - Upright Mount . . . . . Fig. 001-215
Carrier Kit - Canoe . . . . . Fig. 001-225
Carrier Kit - Water Sports . . . . . Fig. 001-230
Ski Carrier - Spare Tire Mount . . . . . Fig. 001-235
Ski Carrier - Roof Mount . . . . . Fig. 001-240
Luggage Carrier - Roof - Hard Style . . . . . Fig. 001-245
Luggage Carrier - Roof - Vinyl . . . . . Fig. 001-250
Rack Kit - Sport Utility . . . . . Fig. 001-255
Wiring Kit - Trailer Tow - 4 Way . . . . . Fig. 001-260
Wiring Kit - Trailer Tow - 7 Way . . . . . Fig. 001-265
Fan Kit - Engine . . . . . Fig. 001-270

Driving Convenience
Remote Start - Installation Kit . . . . . Fig. 001-310

Exterior Appearance
Running Board Kit . . . . . Fig. 001-410
Wheel Kit . . . . . Fig. 001-415

Exterior Protection
Skid Plate - Transfer Case . . . . . Fig. 001-510
Skid Plate - Fuel Tank . . . . . Fig. 001-515

Fog Lights & Electrical
Light Bar Roof . . . . . Fig. 001-615
Hands Free Kit - Cellular Phone - Blue Tooth . . . . . Fig. 001-625

Interior Storage
Guard Kit - Dog . . . . . Fig. 001-810

Player Kit - CD Changer
Figure 001-110

ILLUSTRATION NOT AVAILABLE AT TIME OF PUBLICATION

ITEM	PART NUMBER	QTY	LINE	SERIES	BODY	ENGINE	TRANS	TRIM	DESCRIPTION
Note; For Warranty Repair On Item 2, Order Using Z Prefix									
1	8220 8269	1			74				PLAYER KIT, CD Changer - 6 Disc
2	56038 616AA	1			74				CHANGER, CD
3	4797 433	1							MAGAZINE, CD Changer
4	5073 243AB	1			74				CABLE, CD Changer

2006 Liberty (KJ)

SERIES	LINE	BODY	ENGINE	TRANSMISSION
H =HIGHLINE	T =JEEP - 2WD	74 =SPORT UTILITY 4-DR	EKG=3.7L V6 Eng.	DG6=4-Spd. Auto. 42RLE Trans.
M =MEDIUM	J =JEEP - 4WD		ENR=2.8L 4 Cyl Turbo Diesel Eng.	DGV=4-Spd. Auto. VLP Trans.
P =PREMIUM	U =JEEP - 4WD (RHD)		ENJ=2.5L 4 Cyl 16V Turbo Diesel Eng.	DGQ=5-Spd Auto. 5-45RFE Trans.
			ED1=2.4L 4 Cyl DOHC 16v SMPI Eng.	DEH=6-Speed Man. NSG370 Trans.
				DDD=5-Speed HD Man. Trans.
				DDK=5-Speed HD Man. Trans.

Satellite Receiver Kit
Figure 001-120

ILLUSTRATION NOT AVAILABLE AT TIME OF PUBLICATION

ITEM	PART NUMBER	QTY	LINE	SERIES	BODY	ENGINE	TRANS	TRIM	DESCRIPTION
Note: For Warranty Repair on Item 3, Order Using Z Prefix									
1	82206 488AB	1							RECEIVER, Satelite
2	5066 205AC	1							ANTENNA, Satellite
3	5064 020AJ	1							RECEIVER, Satellite

2006 Liberty (KJ)

SERIES	LINE	BODY	ENGINE	TRANSMISSION
H =HIGHLINE	T =JEEP - 2WD	74 =SPORT UTILITY 4-DR	EKG=3.7L V6 Eng.	DG6=4-Spd. Auto. 42RLE Trans.
M =MEDIUM	J =JEEP - 4WD		ENR=2.8L 4 Cyl Turbo Diesel Eng.	DGV=4-Spd. Auto. VLP Trans.
P =PREMIUM	U =JEEP - 4WD (RHD)		ENJ=2.5L 4 Cyl 16V Turbo Diesel Eng.	DGQ=5-Spd Auto. 5-45RFE Trans.
			ED1=2.4L 4 Cyl DOHC 16v SMPI Eng.	DEH=6-Speed Man. NSG370 Trans.
				DDD=5-Speed HD Man. Trans.
				DDK=5-Speed HD Man. Trans.

Install Kit - Sattelite Receiver Without CD Changer
Figure 001-130

ILLUSTRATION NOT AVAILABLE AT TIME OF PUBLICATION

ITEM	PART NUMBER	QTY	LINE	SERIES	BODY	ENGINE	TRANS	TRIM	DESCRIPTION
1	8220 6489	1							INSTALL KIT, Satelite Receiver
2	5066 207AB	1							CABLE, Antenna
3	5066 203AA	1							WIRING, Rcvr to Radio

2006 Liberty (KJ)

SERIES	LINE	BODY	ENGINE	TRANSMISSION
H =HIGHLINE	T =JEEP - 2WD	74 =SPORT UTILITY 4-DR	EKG=3.7L V6 Eng.	DG6=4-Spd. Auto. 42RLE Trans.
M =MEDIUM	J =JEEP - 4WD		ENR=2.8L 4 Cyl Turbo Diesel Eng.	DGV=4-Spd. Auto. VLP Trans.
P =PREMIUM	U =JEEP - 4WD (RHD)		ENJ=2.5L 4 Cyl 16V Turbo Diesel Eng.	DGQ=5-Spd Auto. 5-45RFE Trans.
			ED1=2.4L 4 Cyl DOHC 16v SMPI Eng.	DEH=6-Speed Man. NSG370 Trans.
				DDD=5-Speed HD Man. Trans.
				DDK=5-Speed HD Man. Trans.

Install Kit - Satellite Receiver With CD
Figure 001-135

ILLUSTRATION NOT AVAILABLE AT TIME OF PUBLICATION

ITEM	PART NUMBER	QTY	LINE	SERIES	BODY	ENGINE	TRANS	TRIM	DESCRIPTION
1	8220 7565	1							INSTALL KIT, Satelite Receiver
2	5066 202AC	1							MODULE, RR Multiplex
3	5066 207AB	1							CABLE, Antenna
4	5066 206AA	1							WIRING, RCVR TO MUX
5	5083 163AA	1							WIRING, CD to MUX
-6	5066 210AA-	1							WIRING, Adaptor

2006 Liberty (KJ)

SERIES	LINE	BODY	ENGINE	TRANSMISSION
H =HIGHLINE	T =JEEP - 2WD	74 =SPORT UTILITY 4-DR	EKG=3.7L V6 Eng.	DG6=4-Spd. Auto. 42RLE Trans.
M =MEDIUM	J =JEEP - 4WD		ENR=2.8L 4 Cyl Turbo Diesel Eng.	DGV=4-Spd. Auto. VLP Trans.
P =PREMIUM	U =JEEP - 4WD (RHD)		ENJ=2.5L 4 Cyl 16V Turbo Diesel Eng.	DGQ=5-Spd Auto. 5-45RFE Trans.
			ED1=2.4L 4 Cyl DOHC 16v SMPI Eng.	DEH=6-Speed Man. NSG370 Trans.
				DDD=5-Speed HD Man. Trans.
				DDK=5-Speed HD Man. Trans.

Navigation Kit (RB1)
Figure 001-140

ILLUSTRATION NOT AVAILABLE AT TIME OF PUBLICATION

ITEM	PART NUMBER	QTY	LINE	SERIES	BODY	ENGINE	TRANS	TRIM	DESCRIPTION
Note: For Warranty Repair On Item 2, Order Using Z Prefix									
1	82208 715AC	1							RADIO, AM/FM CD W/NAV/DVD & CD-CTRL
2	56038 629AH	1							RADIO, AM/FM CD W/NAV/DVD & CD-CTRL
3	56038 630AA	1							ANTENNA, GPS
4	5064 033AC	1							DVD, Geographic Database

2006 Liberty (KJ)

SERIES	LINE	BODY	ENGINE	TRANSMISSION
H =HIGHLINE	T =JEEP - 2WD	74 =SPORT UTILITY 4-DR	EKG=3.7L V6 Eng.	DG6=4-Spd. Auto. 42RLE Trans.
M =MEDIUM	J =JEEP - 4WD		ENR=2.8L 4 Cyl Turbo Diesel Eng.	DGV=4-Spd. Auto. VLP Trans.
P =PREMIUM	U =JEEP - 4WD (RHD)		ENJ=2.5L 4 Cyl 16V Turbo Diesel Eng.	DGQ=5-Spd Auto. 5-45RFE Trans.
			ED1=2.4L 4 Cyl DOHC 16v SMPI Eng.	DEH=6-Speed Man. NSG370 Trans.
				DDD=5-Speed HD Man. Trans.
				DDK=5-Speed HD Man. Trans.

Navigation Kit (RB4)
Figure 001-145

ILLUSTRATION NOT AVAILABLE AT TIME OF PUBLICATION

ITEM	PART NUMBER	QTY	LINE	SERIES	BODY	ENGINE	TRANS	TRIM	DESCRIPTION
Note: For Warranty Repair on Item 2, Order Using Z Prefix									
1	8220 8481	1							RADIO, AM/FM CD W/NAV/DVD & CD-CTRL, [RB4]
2	56043 286AF	1							RADIO, AM/FM CD W/NAV/DVD & CD-CTRL
3	5094 003AA	1							ANTENNA, Satellite
4	5091 501AG	1							COMPACT DISC, Navigation

2006 Liberty (KJ)

SERIES	LINE	BODY	ENGINE	TRANSMISSION
H =HIGHLINE	T =JEEP - 2WD	74 =SPORT UTILITY 4-DR	EKG=3.7L V6 Eng.	DG6=4-Spd. Auto. 42RLE Trans.
M =MEDIUM	J =JEEP - 4WD		ENR=2.8L 4 Cyl Turbo Diesel Eng.	DGV=4-Spd. Auto. VLP Trans.
P =PREMIUM	U =JEEP - 4WD (RHD)		ENJ=2.5L 4 Cyl 16V Turbo Diesel Eng.	DGQ=5-Spd Auto. 5-45RFE Trans.
			ED1=2.4L 4 Cyl DOHC 16v SMPI Eng.	DEH=6-Speed Man. NSG370 Trans.
				DDD=5-Speed HD Man. Trans.
				DDK=5-Speed HD Man. Trans.

Bike Carrier - Roof - Fork Mount
Figure 001-210

ILLUSTRATION NOT AVAILABLE AT TIME OF PUBLICATION

ITEM	PART NUMBER	QTY	LINE	SERIES	BODY	ENGINE	TRANS	TRIM	DESCRIPTION
Note; Requires Sport Utility Rack									
1	8220 7943	1			74				CARRIER KIT, Bike, Fork - Mount
2	5093 779AA	1			74				HARDWARE KIT, Accessory
3	5114 532AA	1			74				STRAP, Cargo Tie Down

2006 Liberty (KJ)

SERIES	LINE	BODY	ENGINE	TRANSMISSION
H =HIGHLINE	T =JEEP - 2WD	74 =SPORT UTILITY 4-DR	EKG=3.7L V6 Eng.	DG6=4-Spd. Auto. 42RLE Trans.
M =MEDIUM	J =JEEP - 4WD		ENR=2.8L 4 Cyl Turbo Diesel Eng.	DGV=4-Spd. Auto. VLP Trans.
P =PREMIUM	U =JEEP - 4WD (RHD)		ENJ=2.5L 4 Cyl 16V Turbo Diesel Eng.	DGQ=5-Spd Auto. 5-45RFE Trans.
			ED1=2.4L 4 Cyl DOHC 16v SMPI Eng.	DEH=6-Speed Man. NSG370 Trans.
				DDD=5-Speed HD Man. Trans.
				DDK=5-Speed HD Man. Trans.

Bike Carrier - Roof - Upright Mount
Figure 001-215

ILLUSTRATION NOT AVAILABLE AT TIME OF PUBLICATION

ITEM	PART NUMBER	QTY	LINE	SERIES	BODY	ENGINE	TRANS	TRIM	DESCRIPTION
Note; Requires Sport Utility Rack									
1	8220 7942	1			74				CARRIER KIT, Bike, Upright - Mount
2	5093 779AA	1			74				HARDWARE KIT, Accessory
3	5114 532AA	1			74				STRAP, Cargo Tie Down

2006 Liberty (KJ)

SERIES	LINE	BODY	ENGINE	TRANSMISSION
H =HIGHLINE	T =JEEP - 2WD	74 =SPORT UTILITY 4-DR	EKG=3.7L V6 Eng.	DG6=4-Spd. Auto. 42RLE Trans.
M =MEDIUM	J =JEEP - 4WD		ENR=2.8L 4 Cyl Turbo Diesel Eng.	DGV=4-Spd. Auto. VLP Trans.
P =PREMIUM	U =JEEP - 4WD (RHD)		ENJ=2.5L 4 Cyl 16V Turbo Diesel Eng.	DGQ=5-Spd Auto. 5-45RFE Trans.
			ED1=2.4L 4 Cyl DOHC 16v SMPI Eng.	DEH=6-Speed Man. NSG370 Trans.
				DDD=5-Speed HD Man. Trans.
				DDK=5-Speed HD Man. Trans.

Carrier Kit - Canoe
Figure 001-225

ILLUSTRATION NOT AVAILABLE AT TIME OF PUBLICATION

ITEM	PART NUMBER	QTY	LINE	SERIES	BODY	ENGINE	TRANS	TRIM	DESCRIPTION
Note; Requires Sport Utlity Rack									
1	8220 4700	1							CARRIER KIT, Canoe
2	5016 389AA	1							HARDWARE KIT, Accessory, Contains 4 25MM Button Head Screws, 4 30MM Button Head Screws, 4 Dome Washers, 4 Lock Washers, 4 Rubber Washers, 4 T-Nuts
3	5016 511AA	1							STRAP, Cargo Tie Down

2006 Liberty (KJ)

SERIES	LINE	BODY	ENGINE	TRANSMISSION
H =HIGHLINE	T =JEEP - 2WD	74 =SPORT UTILITY 4-DR	EKG=3.7L V6 Eng.	DG6=4-Spd. Auto. 42RLE Trans.
M =MEDIUM	J =JEEP - 4WD		ENR=2.8L 4 Cyl Turbo Diesel Eng.	DGV=4-Spd. Auto. VLP Trans.
P =PREMIUM	U =JEEP - 4WD (RHD)		ENJ=2.5L 4 Cyl 16V Turbo Diesel Eng.	DGQ=5-Spd Auto. 5-45RFE Trans.
			ED1=2.4L 4 Cyl DOHC 16v SMPI Eng.	DEH=6-Speed Man. NSG370 Trans.
				DDD=5-Speed HD Man. Trans.
				DDK=5-Speed HD Man. Trans.

Carrier Kit - Water Sports
Figure 001-230

ILLUSTRATION NOT AVAILABLE AT TIME OF PUBLICATION

ITEM	PART NUMBER	QTY	LINE	SERIES	BODY	ENGINE	TRANS	TRIM	DESCRIPTION
Note; Requires Sport Utility Rack									
1	8220 5416	1			74				CARRIER KIT, Water Sports
2	5016 389AA	1							HARDWARE KIT, Accessory, Contains 4 25MM Button Head Screws, 4 30MM Button Head Screws, 4 Dome Washers, 4 Lock Washers, 4 Rubber Washers, 4 T-Nuts
3	5016 511AA	1							STRAP, Cargo Tie Down

2006 Liberty (KJ)

SERIES	LINE	BODY	ENGINE	TRANSMISSION
H =HIGHLINE	T =JEEP - 2WD	74 =SPORT UTILITY 4-DR	EKG=3.7L V6 Eng.	DG6=4-Spd. Auto. 42RLE Trans.
M =MEDIUM	J =JEEP - 4WD		ENR=2.8L 4 Cyl Turbo Diesel Eng.	DGV=4-Spd. Auto. VLP Trans.
P =PREMIUM	U =JEEP - 4WD (RHD)		ENJ=2.5L 4 Cyl 16V Turbo Diesel Eng.	DGQ=5-Spd Auto. 5-45RFE Trans.
			ED1=2.4L 4 Cyl DOHC 16v SMPI Eng.	DEH=6-Speed Man. NSG370 Trans.
				DDD=5-Speed HD Man. Trans.
				DDK=5-Speed HD Man. Trans.

Ski Carrier - Spare Tire Mount
Figure 001-235

ILLUSTRATION NOT AVAILABLE AT TIME OF PUBLICATION

ITEM	PART NUMBER	QTY	LINE	SERIES	BODY	ENGINE	TRANS	TRIM	DESCRIPTION
NOTE: Requires full size, outside mounted spare tire.									
1	8220 7643	1			74				CARRIER KIT, Ski
2	5016 775AA	1			74				STRAP KIT, Bike Carrier Latch

2006 Liberty (KJ)

SERIES	LINE	BODY	ENGINE	TRANSMISSION
H =HIGHLINE	T =JEEP - 2WD	74 =SPORT UTILITY 4-DR	EKG=3.7L V6 Eng.	DG6=4-Spd. Auto. 42RLE Trans.
M =MEDIUM	J =JEEP - 4WD		ENR=2.8L 4 Cyl Turbo Diesel Eng.	DGV=4-Spd. Auto. VLP Trans.
P =PREMIUM	U =JEEP - 4WD (RHD)		ENJ=2.5L 4 Cyl 16V Turbo Diesel Eng.	DGQ=5-Spd Auto. 5-45RFE Trans.
			ED1=2.4L 4 Cyl DOHC 16v SMPI Eng.	DEH=6-Speed Man. NSG370 Trans.
				DDD=5-Speed HD Man. Trans.
				DDK=5-Speed HD Man. Trans.

Ski Carrier - Roof Mount
Figure 001-240

ILLUSTRATION NOT AVAILABLE AT TIME OF PUBLICATION

ITEM	PART NUMBER	QTY	LINE	SERIES	BODY	ENGINE	TRANS	TRIM	DESCRIPTION
Note; Requires Sport Utility Rack									
1									CARRIER KIT, Ski
	8220 7312	1							3 Pair or 2 Snowboards
	8220 7308	1							6 Pair or 4 Snowboards
2	5086 158AA	1							HARDWARE KIT, Accessory,
									Contains: 4 - 25MM Screws, 4 - 20M Screws, 4 - 16MM Screws, 4 - Lock Washers, 4 - Flat Washers, 4 - T Plates, 4 - Rubber Washers
-3	5066 632AA-	1							TOOL, Screw Driver

2006 Liberty (KJ)

SERIES	LINE	BODY	ENGINE	TRANSMISSION
H =HIGHLINE	T =JEEP - 2WD	74 =SPORT UTILITY 4-DR	EKG=3.7L V6 Eng.	DG6=4-Spd. Auto. 42RLE Trans.
M =MEDIUM	J =JEEP - 4WD		ENR=2.8L 4 Cyl Turbo Diesel Eng.	DGV=4-Spd. Auto. VLP Trans.
P =PREMIUM	U =JEEP - 4WD (RHD)		ENJ=2.5L 4 Cyl 16V Turbo Diesel Eng.	DGQ=5-Spd Auto. 5-45RFE Trans.
			ED1=2.4L 4 Cyl DOHC 16v SMPI Eng.	DEH=6-Speed Man. NSG370 Trans.
				DDD=5-Speed HD Man. Trans.
				DDK=5-Speed HD Man. Trans.

Luggage Carrier - Roof - Hard Style
Figure 001-245

ILLUSTRATION NOT AVAILABLE AT TIME OF PUBLICATION

ITEM	PART NUMBER	QTY	LINE	SERIES	BODY	ENGINE	TRANS	TRIM	DESCRIPTION
Note; Requires Sport Utility Rack									
1									CARRIER KIT, Luggage
	82207 341AB	1							480 Liter Capacity
	82207 353AB	1							440 Liter Capacity
2	5086 160AA	1							STRAP, Cargo Tie Down
3	5086 159AA	1							HARDWARE KIT

2006 Liberty (KJ)

SERIES	LINE	BODY	ENGINE	TRANSMISSION
H =HIGHLINE	T =JEEP - 2WD	74 =SPORT UTILITY 4-DR	EKG=3.7L V6 Eng.	DG6=4-Spd. Auto. 42RLE Trans.
M =MEDIUM	J =JEEP - 4WD		ENR=2.8L 4 Cyl Turbo Diesel Eng.	DGV=4-Spd. Auto. VLP Trans.
P =PREMIUM	U =JEEP - 4WD (RHD)		ENJ=2.5L 4 Cyl 16V Turbo Diesel Eng.	DGQ=5-Spd Auto. 5-45RFE Trans.
			ED1=2.4L 4 Cyl DOHC 16v SMPI Eng.	DEH=6-Speed Man. NSG370 Trans.
				DDD=5-Speed HD Man. Trans.
				DDK=5-Speed HD Man. Trans.

Luggage Carrier - Roof - Vinyl
Figure 001-250

ILLUSTRATION NOT AVAILABLE AT TIME OF PUBLICATION

ITEM	PART NUMBER	QTY	LINE	SERIES	BODY	ENGINE	TRANS	TRIM	DESCRIPTION
Note; Sport Utility or Production Rack Required									
1	8220 7198	1							CARRIER KIT, Luggage, 39 inch x 37 inch x 12 inch
2	5066 332AA	1							STRAP KIT, Luggage Carrier

2006 Liberty (KJ)

SERIES	LINE	BODY	ENGINE	TRANSMISSION
H =HIGHLINE	T =JEEP - 2WD	74 =SPORT UTILITY 4-DR	EKG=3.7L V6 Eng.	DG6=4-Spd. Auto. 42RLE Trans.
M =MEDIUM	J =JEEP - 4WD		ENR=2.8L 4 Cyl Turbo Diesel Eng.	DGV=4-Spd. Auto. VLP Trans.
P =PREMIUM	U =JEEP - 4WD (RHD)		ENJ=2.5L 4 Cyl 16V Turbo Diesel Eng.	DGQ=5-Spd Auto. 5-45RFE Trans.
			ED1=2.4L 4 Cyl DOHC 16v SMPI Eng.	DEH=6-Speed Man. NSG370 Trans.
				DDD=5-Speed HD Man. Trans.
				DDK=5-Speed HD Man. Trans.

Rack Kit - Sport Utility
Figure 001-255

ILLUSTRATION NOT AVAILABLE AT TIME OF PUBLICATION

ITEM	PART NUMBER	QTY	LINE	SERIES	BODY	ENGINE	TRANS	TRIM	DESCRIPTION
1	8220 5174	1	J, T		74				RACK KIT, Sport - Rail Mount
2	5086 161AA	1	J, T		74				RUB STRIP, Lugg Rack Cross
3	5086 162AA	1	J, T		74				END CAP, Luggage Rack
4	5086 293AA	1	J, T		74				HARDWARE KIT
-5	5066 632AA-	1	J, T		74				TOOL, Screw Driver

2006 Liberty (KJ)

SERIES	LINE	BODY	ENGINE	TRANSMISSION
H =HIGHLINE	T =JEEP - 2WD	74 =SPORT UTILITY 4-DR	EKG=3.7L V6 Eng.	DG6=4-Spd. Auto. 42RLE Trans.
M =MEDIUM	J =JEEP - 4WD		ENR=2.8L 4 Cyl Turbo Diesel Eng.	DGV=4-Spd. Auto. VLP Trans.
P =PREMIUM	U =JEEP - 4WD (RHD)		ENJ=2.5L 4 Cyl 16V Turbo Diesel Eng.	DGQ=5-Spd Auto. 5-45RFE Trans.
			ED1=2.4L 4 Cyl DOHC 16v SMPI Eng.	DEH=6-Speed Man. NSG370 Trans.
				DDD=5-Speed HD Man. Trans.
				DDK=5-Speed HD Man. Trans.

Wiring Kit - Trailer Tow - 4 Way
Figure 001-260

ILLUSTRATION NOT AVAILABLE AT TIME OF PUBLICATION

ITEM	PART NUMBER	QTY	LINE	SERIES	BODY	ENGINE	TRANS	TRIM	DESCRIPTION
1	8220 7290	1							WIRING PACKAGE, Trailer Tow
2	4641 780	1							STRAP, Tie
3	6016 155	1							STRAP, Tie
4									WIRING, Trailer Tow - 4 Way, Serviced in Package, (NOT SERVICED) (Not Serviced)
5	8220 4602	1							BRACKET KIT, Trailer Tow
6	4671 168	1							RELAY, Mini

2006 Liberty (KJ)

SERIES	LINE	BODY	ENGINE	TRANSMISSION
H =HIGHLINE	T =JEEP - 2WD	74 =SPORT UTILITY 4-DR	EKG=3.7L V6 Eng.	DG6=4-Spd. Auto. 42RLE Trans.
M =MEDIUM	J =JEEP - 4WD		ENR=2.8L 4 Cyl Turbo Diesel Eng.	DGV=4-Spd. Auto. VLP Trans.
P =PREMIUM	U =JEEP - 4WD (RHD)		ENJ=2.5L 4 Cyl 16V Turbo Diesel Eng.	DGQ=5-Spd Auto. 5-45RFE Trans.
			ED1=2.4L 4 Cyl DOHC 16v SMPI Eng.	DEH=6-Speed Man. NSG370 Trans.
				DDD=5-Speed HD Man. Trans.
				DDK=5-Speed HD Man. Trans.

Wiring Kit - Trailer Tow - 7 Way
Figure 001-265

ILLUSTRATION NOT AVAILABLE AT TIME OF PUBLICATION

ITEM	PART NUMBER	QTY	LINE	SERIES	BODY	ENGINE	TRANS	TRIM	DESCRIPTION
1	8220 7248	1							WIRING PACKAGE, Trailer Tow
2	56038 366AB	1							CONNECTOR, 7 Way
3	0154 633	1							SCREW, .164-18x.625
4	4641 780	1							STRAP, Tie
5	6016 155	1							STRAP, Tie
6									WIRING, Trailer Tow, (NOT SERVICED) (Not Serviced)
7	5600 7290	1							BREAKER, Circuit
8	4671 168	1							RELAY, Mini

2006 Liberty (KJ)

SERIES	LINE	BODY	ENGINE	TRANSMISSION
H =HIGHLINE	T =JEEP - 2WD	74 =SPORT UTILITY 4-DR	EKG=3.7L V6 Eng.	DG6=4-Spd. Auto. 42RLE Trans.
M =MEDIUM	J =JEEP - 4WD		ENR=2.8L 4 Cyl Turbo Diesel Eng.	DGV=4-Spd. Auto. VLP Trans.
P =PREMIUM	U =JEEP - 4WD (RHD)		ENJ=2.5L 4 Cyl 16V Turbo Diesel Eng.	DGQ=5-Spd Auto. 5-45RFE Trans.
			ED1=2.4L 4 Cyl DOHC 16v SMPI Eng.	DEH=6-Speed Man. NSG370 Trans.
				DDD=5-Speed HD Man. Trans.
				DDK=5-Speed HD Man. Trans.

Fan Kit - Engine
Figure 001-270

ILLUSTRATION NOT AVAILABLE AT TIME OF PUBLICATION

ITEM	PART NUMBER	QTY	LINE	SERIES	BODY	ENGINE	TRANS	TRIM	DESCRIPTION
1	8220 8909	1			74				FAN KIT, Cooling Heavy Duty
2	6505 172AA	1			74				U-NUT, M6x1.00
3	6102 117AA	1			74				SCREW AND WASHER, Hex Head, M6x1x20
4	52080 127AA	1			74				SHROUD, Fan
5	55037 691AA	1			74				FAN, Cooling
6	6034 860	1			74				BOLT AND WASHER, Implement Attaching
7	52079 718AD	1			74				DRIVE, Fan
8	52079 654AD	1			74				FAN, Cooling

2006 Liberty (KJ)

SERIES	LINE	BODY	ENGINE	TRANSMISSION
H =HIGHLINE	T =JEEP - 2WD	74 =SPORT UTILITY 4-DR	EKG=3.7L V6 Eng.	DG6=4-Spd. Auto. 42RLE Trans.
M =MEDIUM	J =JEEP - 4WD		ENR=2.8L 4 Cyl Turbo Diesel Eng.	DGV=4-Spd. Auto. VLP Trans.
P =PREMIUM	U =JEEP - 4WD (RHD)		ENJ=2.5L 4 Cyl 16V Turbo Diesel Eng.	DGQ=5-Spd Auto. 5-45RFE Trans.
			ED1=2.4L 4 Cyl DOHC 16v SMPI Eng.	DEH=6-Speed Man. NSG370 Trans.
				DDD=5-Speed HD Man. Trans.
				DDK=5-Speed HD Man. Trans.

Remote Start - Installation Kit
Figure 001-310

ILLUSTRATION NOT AVAILABLE AT TIME OF PUBLICATION

ITEM	PART NUMBER	QTY	LINE	SERIES	BODY	ENGINE	TRANS	TRIM	DESCRIPTION
1	82208 998AB	1							INSTALL KIT, REMOTE START
2	5140 471AA	1							ANTENNA
3	5140 470AA	1							ANTENNA
4	5140 472AA	1							TRANSMITTER
5	5140 473AA	1							SWITCH
6	5140 474AA	1							LABEL
7	5140 773AA	1							BATTERY, Transmitter
8	5179 438AA	1							HARNESS, Wiring
9	82208 859AB	1							MODULE KIT, REMOTE START
10	5140 466AA	1							MODULE, Remote Start
11	5140 468AA	1							MODULE

2006 Liberty (KJ)

SERIES	LINE	BODY	ENGINE	TRANSMISSION
H =HIGHLINE	T =JEEP - 2WD	74 =SPORT UTILITY 4-DR	EKG=3.7L V6 Eng.	DG6=4-Spd. Auto. 42RLE Trans.
M =MEDIUM	J =JEEP - 4WD		ENR=2.8L 4 Cyl Turbo Diesel Eng.	DGV=4-Spd. Auto. VLP Trans.
P =PREMIUM	U =JEEP - 4WD (RHD)		ENJ=2.5L 4 Cyl 16V Turbo Diesel Eng.	DGQ=5-Spd Auto. 5-45RFE Trans.
			ED1=2.4L 4 Cyl DOHC 16v SMPI Eng.	DEH=6-Speed Man. NSG370 Trans.
				DDD=5-Speed HD Man. Trans.
				DDK=5-Speed HD Man. Trans.

Running Board Kit
Figure 001-410

ILLUSTRATION NOT AVAILABLE AT TIME OF PUBLICATION

ITEM	PART NUMBER	QTY	LINE	SERIES	BODY	ENGINE	TRANS	TRIM	DESCRIPTION
1									RUNNING BOARD KIT, Full
	8220 7680	1							Black [DX8]
	8220 7681	1			74				Flame Red [PR4]
	8220 7682	1							Stone White [SW1]
	8220 7683	1							Patriot Blue [WB7]
	8220 7685	1							Bright Silver [WS2]
	8220 7687	1			74				Shale Green [XGR]
	8220 9251	1			74				Atlantic Blue [PBJ]
	8220 9252	1			74				Lt Khaki Metalic [PJC]
	8220 7679	1							Primed
	8220 7690	1							Gray, Matches Cladding
2									END CAP, Running Board, Unpainted
	5086 043AA	1							Front Left
	5086 045AA	1							Front Right
3									END CAP, Running Board, Unpainted
	5086 044AA	1							Left Rear
	5086 046AA	1							Right Rear
4	5083 937AA	1							SCREW PACKAGE, Screw

2006 Liberty (KJ)

SERIES	LINE	BODY	ENGINE	TRANSMISSION
H =HIGHLINE	T =JEEP - 2WD	74 =SPORT UTILITY 4-DR	EKG=3.7L V6 Eng.	DG6=4-Spd. Auto. 42RLE Trans.
M =MEDIUM	J =JEEP - 4WD		ENR=2.8L 4 Cyl Turbo Diesel Eng.	DGV=4-Spd. Auto. VLP Trans.
P =PREMIUM	U =JEEP - 4WD (RHD)		ENJ=2.5L 4 Cyl 16V Turbo Diesel Eng.	DGQ=5-Spd Auto. 5-45RFE Trans.
			ED1=2.4L 4 Cyl DOHC 16v SMPI Eng.	DEH=6-Speed Man. NSG370 Trans.
				DDD=5-Speed HD Man. Trans.
				DDK=5-Speed HD Man. Trans.

Wheel Kit
Figure 001-415

ILLUSTRATION NOT AVAILABLE AT TIME OF PUBLICATION

ITEM	PART NUMBER	QTY	LINE	SERIES	BODY	ENGINE	TRANS	TRIM	DESCRIPTION
Note; Item#1, Contains 1 Wheel and 1 Center Cap									
1									WHEEL KIT, Cast Aluminum
	8220 5580	1							Polished
	8220 5899	1			74				Chromed
2	5083 064AA	1			74				CAP, Wheel Center

2006 Liberty (KJ)

SERIES	LINE	BODY	ENGINE	TRANSMISSION
H =HIGHLINE	T =JEEP - 2WD	74 =SPORT UTILITY 4-DR	EKG=3.7L V6 Eng.	DG6=4-Spd. Auto. 42RLE Trans.
M =MEDIUM	J =JEEP - 4WD		ENR=2.8L 4 Cyl Turbo Diesel Eng.	DGV=4-Spd. Auto. VLP Trans.
P =PREMIUM	U =JEEP - 4WD (RHD)		ENJ=2.5L 4 Cyl 16V Turbo Diesel Eng.	DGQ=5-Spd Auto. 5-45RFE Trans.
			ED1=2.4L 4 Cyl DOHC 16v SMPI Eng.	DEH=6-Speed Man. NSG370 Trans.
				DDD=5-Speed HD Man. Trans.
				DDK=5-Speed HD Man. Trans.

Skid Plate - Transfer Case
Figure 001-510

ILLUSTRATION NOT AVAILABLE AT TIME OF PUBLICATION

ITEM	PART NUMBER	QTY	LINE	SERIES	BODY	ENGINE	TRANS	TRIM	DESCRIPTION
1	8220 9455	1			74				PLATE PACKAGE, Skid - Transfer Case
2	52129 091AA	1			74				PLATE, Transfer Case Skid
3	6505 294AA	1			74				RIVET
4	6503 571	1			74				SCREW AND WASHER, M10x1. 50x35
-5	5013 886AA-	1							TOOL, Rivnut

2006 Liberty (KJ)

SERIES	LINE	BODY	ENGINE	TRANSMISSION
H =HIGHLINE	T =JEEP - 2WD	74 =SPORT UTILITY 4-DR	EKG=3.7L V6 Eng.	DG6=4-Spd. Auto. 42RLE Trans.
M =MEDIUM	J =JEEP - 4WD		ENR=2.8L 4 Cyl Turbo Diesel Eng.	DGV=4-Spd. Auto. VLP Trans.
P =PREMIUM	U =JEEP - 4WD (RHD)		ENJ=2.5L 4 Cyl 16V Turbo Diesel Eng.	DGQ=5-Spd Auto. 5-45RFE Trans.
			ED1=2.4L 4 Cyl DOHC 16v SMPI Eng.	DEH=6-Speed Man. NSG370 Trans.
				DDD=5-Speed HD Man. Trans.
				DDK=5-Speed HD Man. Trans.

Skid Plate - Fuel Tank
Figure 001-515

ILLUSTRATION NOT AVAILABLE AT TIME OF PUBLICATION

ITEM	PART NUMBER	QTY	LINE	SERIES	BODY	ENGINE	TRANS	TRIM	DESCRIPTION
1	8220 6122	1			74				SKID PLATE PACKAGE, Fuel Tank
2	52100 332AH	1							PLATE, Skid
3	6502 557	6							BOLT, Hex Flange Head, M12x1. 75x40

2006 Liberty (KJ)

SERIES	LINE	BODY	ENGINE	TRANSMISSION
H =HIGHLINE	T =JEEP - 2WD	74 =SPORT UTILITY 4-DR	EKG=3.7L V6 Eng.	DG6=4-Spd. Auto. 42RLE Trans.
M =MEDIUM	J =JEEP - 4WD		ENR=2.8L 4 Cyl Turbo Diesel Eng.	DGV=4-Spd. Auto. VLP Trans.
P =PREMIUM	U =JEEP - 4WD (RHD)		ENJ=2.5L 4 Cyl 16V Turbo Diesel Eng.	DGQ=5-Spd Auto. 5-45RFE Trans.
			ED1=2.4L 4 Cyl DOHC 16v SMPI Eng.	DEH=6-Speed Man. NSG370 Trans.
				DDD=5-Speed HD Man. Trans.
				DDK=5-Speed HD Man. Trans.

Light Bar Roof
Figure 001-615

ILLUSTRATION NOT AVAILABLE AT TIME OF PUBLICATION

ITEM	PART NUMBER	QTY	LINE	SERIES	BODY	ENGINE	TRANS	TRIM	DESCRIPTION
1	82206 126AB	1			74				BAR KIT, Light
2	52112 063AC	4							LAMP, Off Road
3	5HZ07 RXFAF	4							COVER, Lamp
4	5HZ01 RXFAH	1							COVER, Light Bar Support
5	5083 967AA	1							BAR, Light Support
6	6503 952	1			74				SCREW, Pan Head, M6x1.0x17.00
7	6100 876	1			74				WASHER, Flat, M6.82x17.00x1.75
8	6504 710	1			74				NUT/RIVET, M6x1.00x13.50
9	56050 301AA	1							WIRING, Roof Lamps
-10	5073 039AA-	1	J, U						STRAP, Tie, Bag of 50
11	6507 783AA	4							SCREW, Shoulder
12									BEZEL, Instrument Panel
	5KE16 XDHAA	1	J, T						[DH]
	5KE16 ZJ8AA	1	J, T						[J8]
13	56010 417AC	1							SWITCH, Off Road Lamp
-14	5066 562AA-	1			74				TOOL, Rivnut
15									RELAY, (NOT SERVICED) (Not Serviced)

2006 Liberty (KJ)

SERIES	LINE	BODY	ENGINE	TRANSMISSION
H =HIGHLINE	T =JEEP - 2WD	74 =SPORT UTILITY 4-DR	EKG=3.7L V6 Eng.	DG6=4-Spd. Auto. 42RLE Trans.
M =MEDIUM	J =JEEP - 4WD		ENR=2.8L 4 Cyl Turbo Diesel Eng.	DGV=4-Spd. Auto. VLP Trans.
P =PREMIUM	U =JEEP - 4WD (RHD)		ENJ=2.5L 4 Cyl 16V Turbo Diesel Eng.	DGQ=5-Spd Auto. 5-45RFE Trans.
			ED1=2.4L 4 Cyl DOHC 16v SMPI Eng.	DEH=6-Speed Man. NSG370 Trans.
				DDD=5-Speed HD Man. Trans.
				DDK=5-Speed HD Man. Trans.

Hands Free Kit - Cellular Phone - Blue Tooth
Figure 001-625

ILLUSTRATION NOT AVAILABLE AT TIME OF PUBLICATION

ITEM	PART NUMBER	QTY	LINE	SERIES	BODY	ENGINE	TRANS	TRIM	DESCRIPTION
1	82207 853AE	1							HANDS FREE KIT, Cellular Phone
2	5114 359AD	1							MODULE, U Connect
3	5102 026AA	1							SPEAKER, Front
4	5102 025AA	1							MICROPHONE, Audio
5	5102 027AA	1							CONTROLLER, Audio

2006 Liberty (KJ)

SERIES	LINE	BODY	ENGINE	TRANSMISSION
H =HIGHLINE	T =JEEP - 2WD	74 =SPORT UTILITY 4-DR	EKG=3.7L V6 Eng.	DG6=4-Spd. Auto. 42RLE Trans.
M =MEDIUM	J =JEEP - 4WD		ENR=2.8L 4 Cyl Turbo Diesel Eng.	DGV=4-Spd. Auto. VLP Trans.
P =PREMIUM	U =JEEP - 4WD (RHD)		ENJ=2.5L 4 Cyl 16V Turbo Diesel Eng.	DGQ=5-Spd Auto. 5-45RFE Trans.
			ED1=2.4L 4 Cyl DOHC 16v SMPI Eng.	DEH=6-Speed Man. NSG370 Trans.
				DDD=5-Speed HD Man. Trans.
				DDK=5-Speed HD Man. Trans.

Guard Kit - Dog
Figure 001-810

ILLUSTRATION NOT AVAILABLE AT TIME OF PUBLICATION

ITEM	PART NUMBER	QTY	LINE	SERIES	BODY	ENGINE	TRANS	TRIM	DESCRIPTION
1	8220 6855	1			74				GUARD KIT, Dog Guard
2	5086 022AA	1			74				HARDWARE KIT, Load Partition

2006 Liberty (KJ)

SERIES	LINE	BODY	ENGINE	TRANSMISSION
H =HIGHLINE	T =JEEP - 2WD	74 =SPORT UTILITY 4-DR	EKG=3.7L V6 Eng.	DG6=4-Spd. Auto. 42RLE Trans.
M =MEDIUM	J =JEEP - 4WD		ENR=2.8L 4 Cyl Turbo Diesel Eng.	DGV=4-Spd. Auto. VLP Trans.
P =PREMIUM	U =JEEP - 4WD (RHD)		ENJ=2.5L 4 Cyl 16V Turbo Diesel Eng.	DGQ=5-Spd Auto. 5-45RFE Trans.
			ED1=2.4L 4 Cyl DOHC 16v SMPI Eng.	DEH=6-Speed Man. NSG370 Trans.
				DDD=5-Speed HD Man. Trans.
				DDK=5-Speed HD Man. Trans.

Group – 002

Front Suspension & Drive

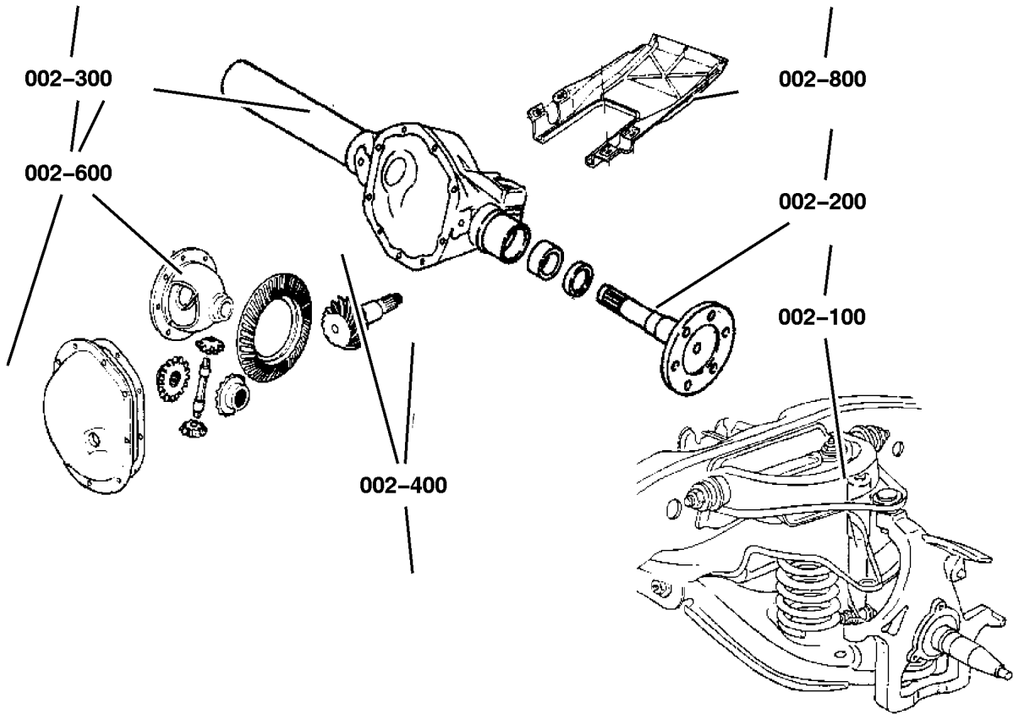

002–100 Front Suspension 	**002–200** Front Axle Drive Shafts 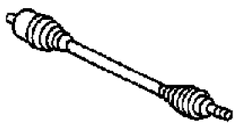	**002–300** Front Axle Housing 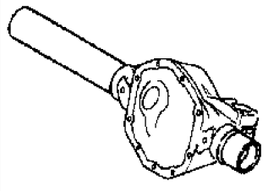	**002–400** Front Axle Assembly 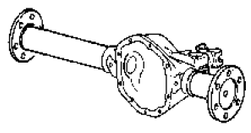
002–600 Front Axle Differential 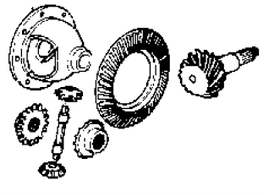	**002–800** Front Axle Skid Plate 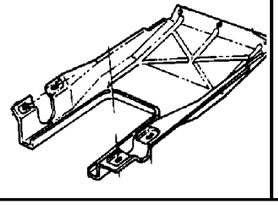		

GROUP 2 - Front Suspension & Drive

Illustration Title — Group-Fig. No.

Front Suspension
Suspension,Front and Strut . . . . . Fig. 002-110
Bar,Front Sway . . . . . Fig. 002-120
Cradle,Front Suspension and Attaching Parts . . . . . Fig. 002-130

Front Axle Drive Shafts
Axle Shafts,Front . . . . . Fig. 002-210

Front Axle Housing
Housing,Axle,Front . . . . . Fig. 002-310

Front Axle Assembly
Axle Assembly,Front . . . . . Fig. 002-410

Front Axle Differential
Differential,Front Axle . . . . . Fig. 002-610

Front Axle Skid Plate
Skid Plate,Front Axle . . . . . Fig. 002-810

Suspension,Front and Strut
Figure 002-110

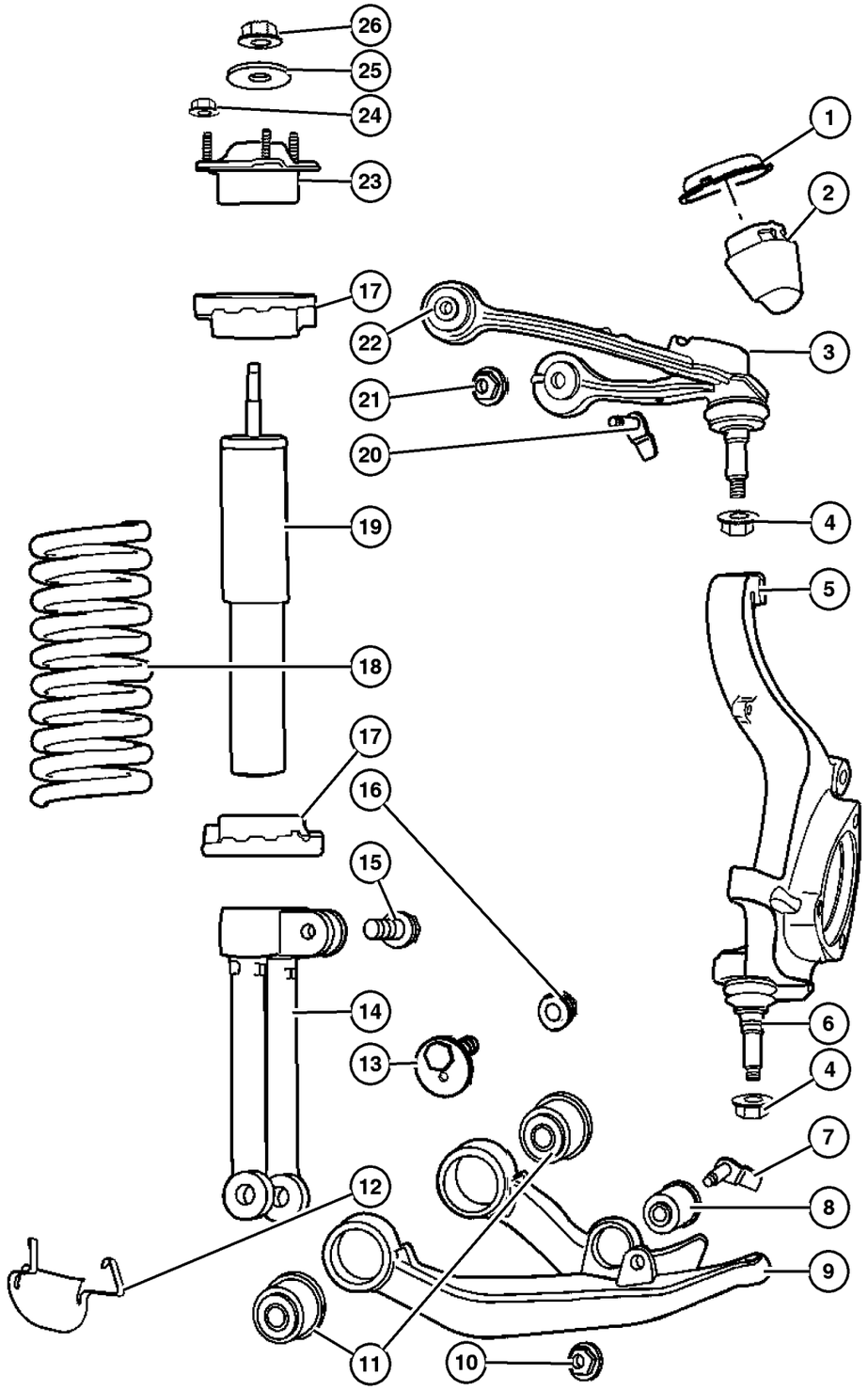

ITEM	PART NUMBER	QTY	LINE	SERIES	BODY	ENGINE	TRANS	TRIM	DESCRIPTION
Note:Sales Codes;									
[ZCC] Through [ZRK] = Spring Sales Codes will Be Found On Vehicle Identification Number [VIN] Sales Code Lisiing									
1	55360 201AC	1							CUP, Jounce Bumper, Right or Left
2	52088 684AC	2							BUMPER, Jounce, Right or Left
3	52088 632AD	2							ARM, Control, Upper-With Bushings and Balljoint, Right or Left
4									NUT AND WASHER
	6505 623AA	2							UCA to Knuckle, Mounting
		2							Lower Ball Joint to LCA, Mounting
5									KNUCKLE, Front
	52088 652AD	1	J, T						Without Lower Ball Joint, Right
	52088 653AD	1	J, T						Without Lower Ball Joint, Left
6	5114 037AD	1	J, T						BALL JOINT PACKAGE, Lower Control Arm, Right or Left
7	6507 275AA	2							BOLT AND RETAINER, Hex Head, Shock Clevis to LCA, Mounting
8	52088 746AA	1							BUSHING, Pivot, Shock Clevis
9									ARM, Lower Control, Front
	52088 636AF	1							With 3 Bushings, Right
	52088 637AF	1							With 3 Bushings, Left
10	6102 251AA	2							NUT, M14X2, Shock Clevis to LCA, Mounting
11	52088 649AC	2							BUSHING, Pivot
12	52128 983AA	2							SHIELD, Heat, Lower Ball Joint, Right or Left
13	6507 912AA	4							SCREW AND WASHER, Hex Head, LCA to Cradle Cam Bolt, Mounting
14	52088 748AC	1							CLEVIS, Front, Shock, Mounting
15	6507 325AA	1							SCREW, Hex Flange Head, Clevis Pinch
16	6102 252AA	4							NUT, Hex Flange Lock, LCA to Cradle, Mounting
17	52088 686AA	2							ISOLATOR, Spring, Upper or Lower
18									SPRING, Front Coil
	52128 873AA	1							[ZCC,ZRC]
	52128 874AA	1							[ZCD,ZRD]
	52128 875AA	1							[ZCE,ZRE]
	52128 876AB	1							[ZCF,ZRF]
	52128 877AB	1							[ZCG,ZRG]
	52128 878AB	1							[ZCH,ZRH]
	52128 879AB	1							[ZCJ,ZRJ]
	52128 880AA	1							[ZCK,ZRK]

2006 Liberty (KJ)

SERIES	LINE	BODY	ENGINE	TRANSMISSION
H =HIGHLINE	T =JEEP - 2WD	74 =SPORT UTILITY 4-DR	EKG=3.7L V6 Eng.	DG6=4-Spd. Auto. 42RLE Trans.
M =MEDIUM	J =JEEP - 4WD		ENR=2.8L 4 Cyl Turbo Diesel Eng.	DGV=4-Spd. Auto. VLP Trans.
P =PREMIUM	U =JEEP - 4WD (RHD)		ENJ=2.5L 4 Cyl 16V Turbo Diesel Eng.	DGQ=5-Spd Auto. 5-45RFE Trans.
			ED1=2.4L 4 Cyl DOHC 16v SMPI Eng.	DEH=6-Speed Man. NSG370 Trans.
				DDD=5-Speed HD Man. Trans.
				DDK=5-Speed HD Man. Trans.

Suspension,Front and Strut
Figure 002-110

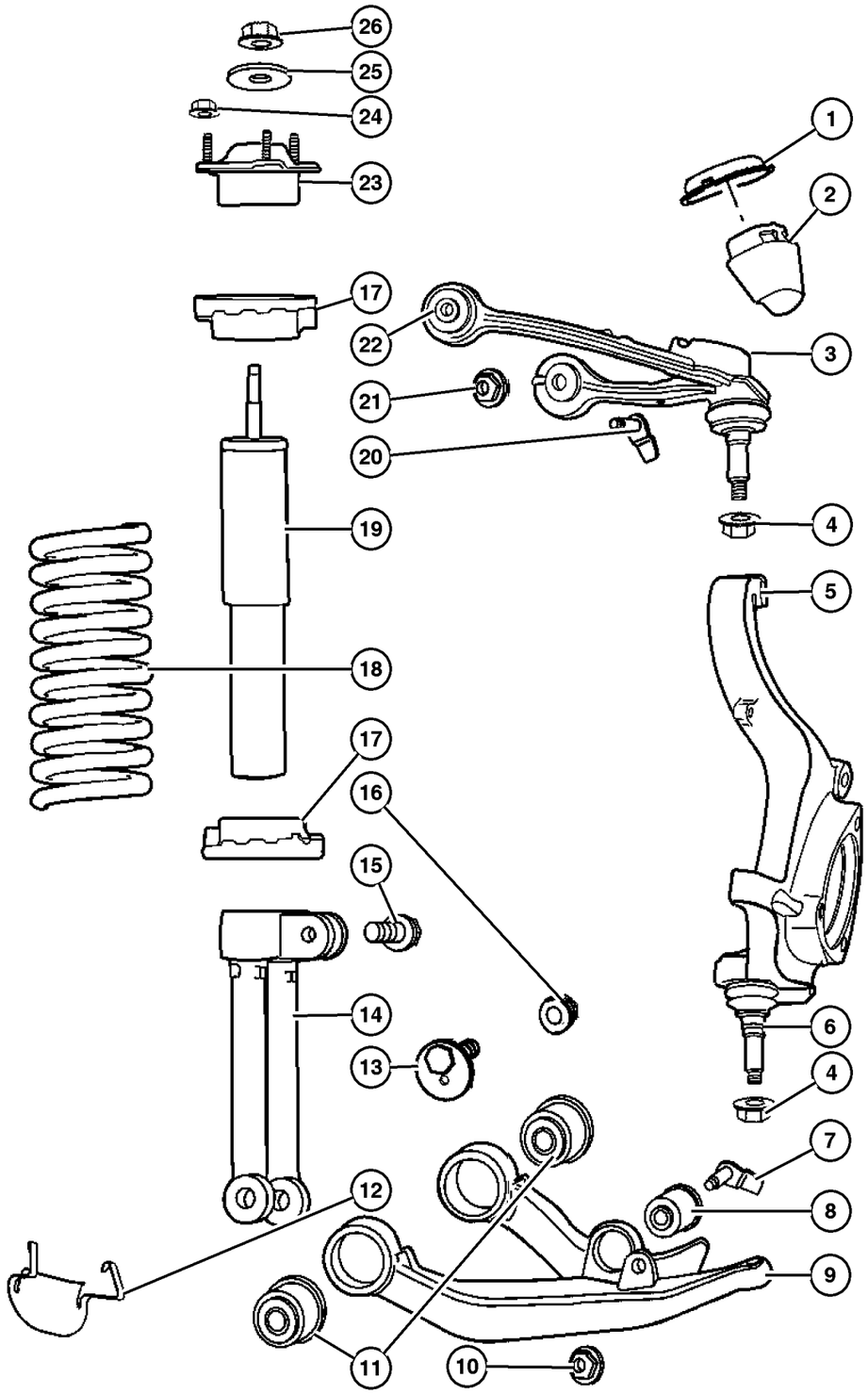

ITEM	PART NUMBER	QTY	LINE	SERIES	BODY	ENGINE	TRANS	TRIM	DESCRIPTION
19	52088 650AF	1							SHOCK ABSORBER, Suspension, Front
20	6507 965AA	4							BOLT AND RETAINER, Hex Head, UCA, Mounting
21	6502 697	4							NUT, Hex Flange Lock, M12x1.75, UCA, Mounting
22	52088 634AB	2							BUSHING, Control Arm, Upper
23									MOUNT, Shock Upper
	52128 532AA	1							Right
	52128 533AA	1							Left
24	6502 697	8							NUT, Hex Flange Lock, M12x1.75, Shock Mount to Body, Mounting
25	52089 069AA	1							RETAINER, Shock Absorber, Shock, Mounting
26	6506 443AA	1							NUT, Nylock Hex, M10x1.5, Shock, Mounting

2006 Liberty (KJ)

SERIES	LINE	BODY	ENGINE	TRANSMISSION
H =HIGHLINE	T =JEEP - 2WD	74 =SPORT UTILITY 4-DR	EKG=3.7L V6 Eng.	DG6=4-Spd. Auto. 42RLE Trans.
M =MEDIUM	J =JEEP - 4WD		ENR=2.8L 4 Cyl Turbo Diesel Eng.	DGV=4-Spd. Auto. VLP Trans.
P =PREMIUM	U =JEEP - 4WD (RHD)		ENJ=2.5L 4 Cyl 16V Turbo Diesel Eng.	DGQ=5-Spd Auto. 5-45RFE Trans.
			ED1=2.4L 4 Cyl DOHC 16v SMPI Eng.	DEH=6-Speed Man. NSG370 Trans.
				DDD=5-Speed HD Man. Trans.
				DDK=5-Speed HD Man. Trans.

Bar,Front Sway
Figure 002-120

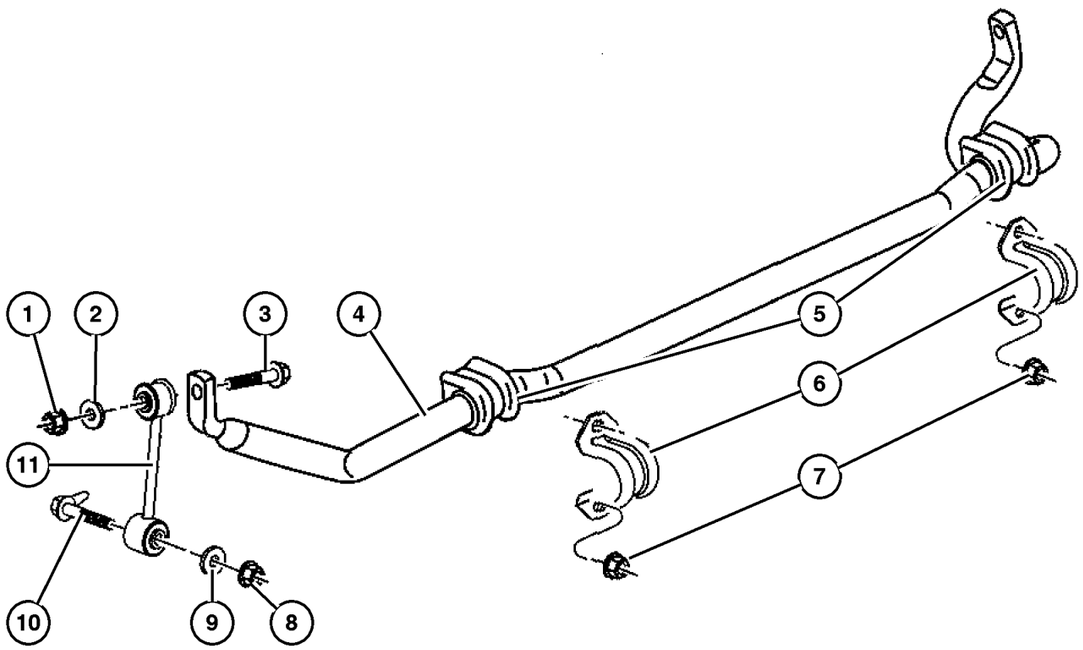

ITEM	PART NUMBER	QTY	LINE	SERIES	BODY	ENGINE	TRANS	TRIM	DESCRIPTION
1	6502 697	2							NUT, Hex Flange Lock, M12x1.75, Sway Bar Link to Sway Bar
2	6504 558	2							WASHER, ID=13.07 x OD=40.00 x THK=3.50 Sway Bar Link to Sway Bar, Sway Bar Link to Sway Bar, Mounting
3	6503 712	2							SCREW, Sway Bar Link to Sway Bar, Mounting
4	52088 660AA	1							BAR, Front Sway
5	52088 778AB	2							CUSHION, Sway Eliminator
6	52088 631AA	2							RETAINER, Sway Bar
7	6502 697	4							NUT, Hex Flange Lock, M12x1.75, Sway Bar Clamp to Cradle, Mounting
8	6502 697	2							NUT, Hex Flange Lock, M12x1.75, Sway Bar Link to LCA, Mounting
9	6504 558	2							WASHER, ID=13.07 x OD=40.00 x THK=3.50 Sway Bar Link to Lower Control Arm, Link to LCA, Mounting
10	6506 984AA	2							BOLT AND RETAINER, Hex Head, Sway Bar Link to LCA, Mounting
11	52088 662AB	2							LINK, Sway Eliminator

2006 Liberty (KJ)

SERIES	LINE	BODY	ENGINE	TRANSMISSION
H =HIGHLINE	T =JEEP - 2WD	74 =SPORT UTILITY 4-DR	EKG=3.7L V6 Eng.	DG6=4-Spd. Auto. 42RLE Trans.
M =MEDIUM	J =JEEP - 4WD		ENR=2.8L 4 Cyl Turbo Diesel Eng.	DGV=4-Spd. Auto. VLP Trans.
P =PREMIUM	U =JEEP - 4WD (RHD)		ENJ=2.5L 4 Cyl 16V Turbo Diesel Eng.	DGQ=5-Spd Auto. 5-45RFE Trans.
			ED1=2.4L 4 Cyl DOHC 16v SMPI Eng.	DEH=6-Speed Man. NSG370 Trans.
				DDD=5-Speed HD Man. Trans.
				DDK=5-Speed HD Man. Trans.

Cradle,Front Suspension and Attaching Parts
Figure 002-130

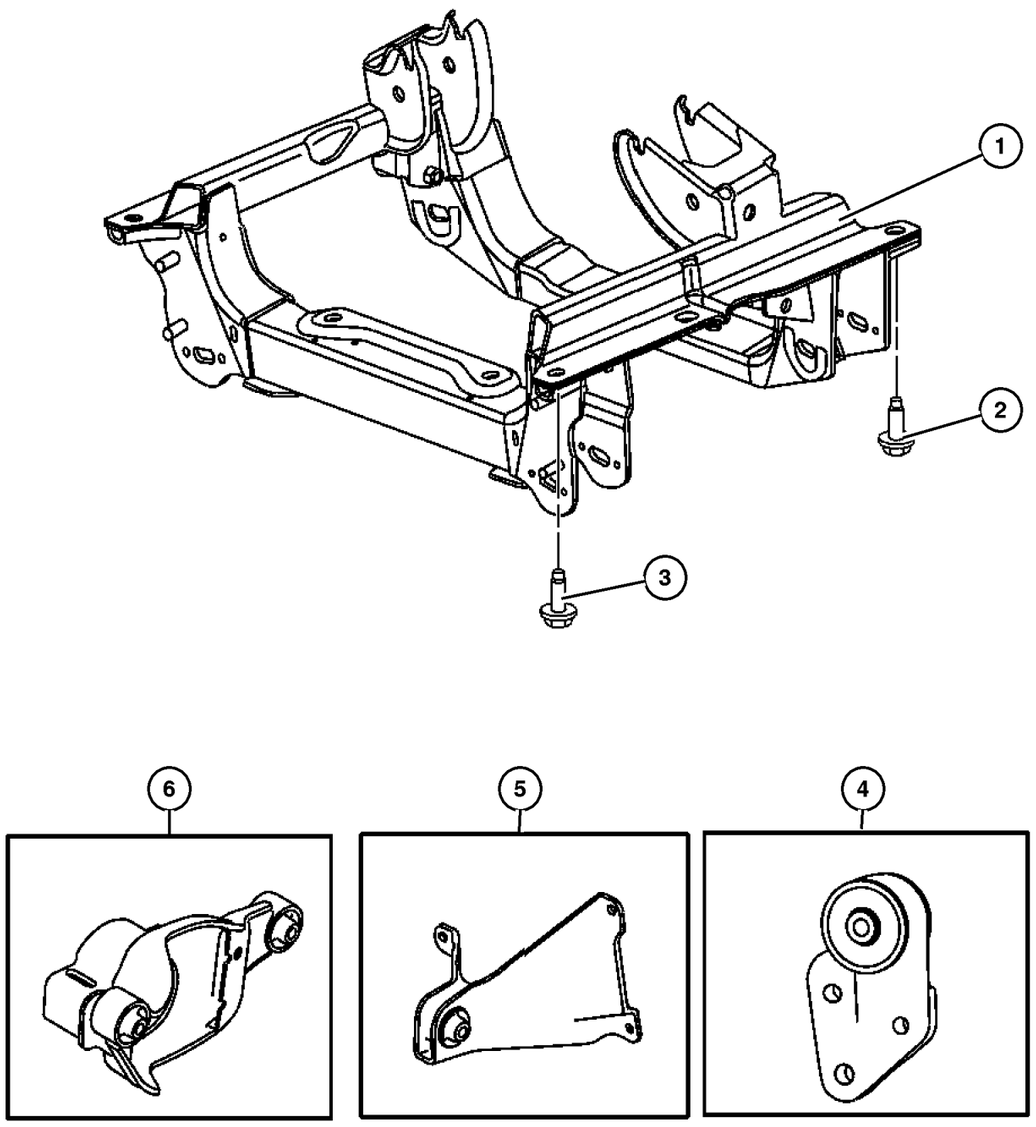

ITEM	PART NUMBER	QTY	LINE	SERIES	BODY	ENGINE	TRANS	TRIM	DESCRIPTION
Note:Sales Codes;									
[EK0]=Engines - All 3.7L 6 Cylinder Gas									
[EN0]=Engines - All 4/5 Cylinder Turbo Diesel									
1									CRADLE, front suspension
	52128 994AE	1							[EK0]
	52129 013AE	1	J, U						[EN0]
2	6506 672AA	2							SCREW AND WASHER, Hex, Cradle to Sill-Front, Mounting
3	6507 135AA	2							SCREW, Cradle to Sill-Rear, Mounting
4									BRACKET, Mounting
	52059 467AD	1	J, U						[EK0], Left Rear
	52059 475AD	1	J, U						[EN0], Left Rear
5									BRACKET, Mounting
	52059 465AD	1	J, U						[EK0], Left
	52059 473AD	1	J, U						[EN0], Left
6									BRACKET, Mounting
	52059 464AD	1	J, U						[EK0], Right
	52059 472AC	1	J, U						[EN0], Right
-7									BOLT
	6506 067AA-	2	J, U						[EK0] Right Front Bracket to Axle, Mounting
		4	J, U						[EK0] Axle Assembly to Cradle, Mounting
		2	J, U						[EN0] Right Front Bracket to Axle, Mounting
		4	J, U						[EN0] Axle Assembly to Cradle, Mounting
-8	6502 696	2	J, U						NUT, Hex Flange Lock, M10x1.5, [EK0] Right Bracket, Mounting
-9									NUT, Hex Flange, M12x1.75
	6502 835	2	J, U						[EK0] Axle Assembly to Cradle, Mounting
		4	J, U						[EN0] Axle Assembly to Cradle and Right Bracket, Mounting
-10									SCREW AND WASHER, M10x1. 50x45.00
	6101 985	3	J, U						[EK0] Left Front and Left Rear Bracket to Axle, Mounting
		6	J, U						[EN0] Left Front and Left Rear Bracket to Axle, Mounting

2006 Liberty (KJ)

SERIES	LINE	BODY	ENGINE	TRANSMISSION
H =HIGHLINE	T =JEEP - 2WD	74 =SPORT UTILITY 4-DR	EKG=3.7L V6 Eng.	DG6=4-Spd. Auto. 42RLE Trans.
M =MEDIUM	J =JEEP - 4WD		ENR=2.8L 4 Cyl Turbo Diesel Eng.	DGV=4-Spd. Auto. VLP Trans.
P =PREMIUM	U =JEEP - 4WD (RHD)		ENJ=2.5L 4 Cyl 16V Turbo Diesel Eng.	DGQ=5-Spd Auto. 5-45RFE Trans.
			ED1=2.4L 4 Cyl DOHC 16v SMPI Eng.	DEH=6-Speed Man. NSG370 Trans.
				DDD=5-Speed HD Man. Trans.
				DDK=5-Speed HD Man. Trans.

Cradle,Front Suspension and Attaching Parts
Figure 002-130

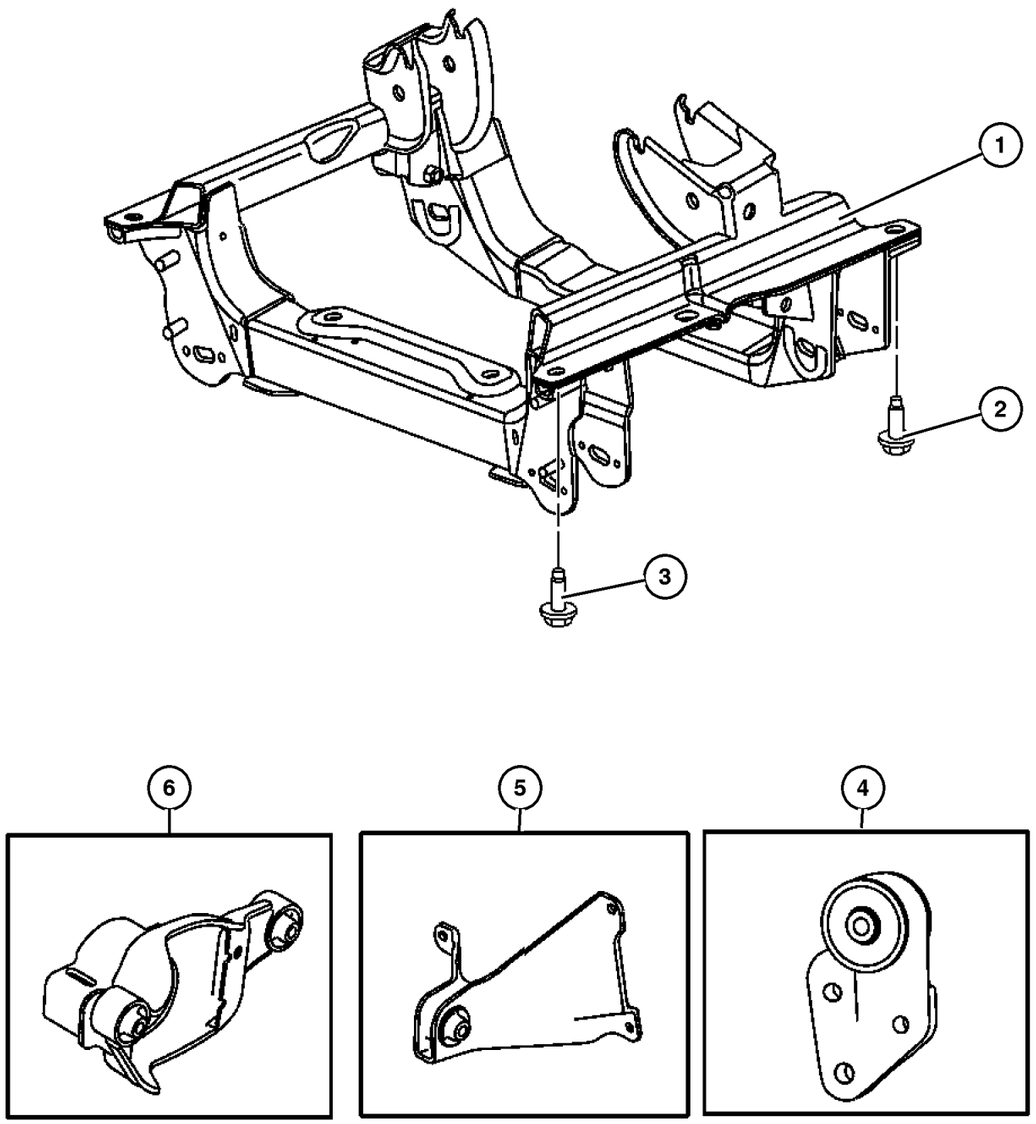

ITEM	PART NUMBER	QTY	LINE	SERIES	BODY	ENGINE	TRANS	TRIM	DESCRIPTION
-11	6502 696	3	J, U						NUT, Hex Flange Lock, M10x1.5, [EK0,EN0] Left Front Bracket to Axle, Mounting

2006 Liberty (KJ)

SERIES	LINE	BODY	ENGINE	TRANSMISSION
H =HIGHLINE	T =JEEP - 2WD	74 =SPORT UTILITY 4-DR	EKG=3.7L V6 Eng.	DG6=4-Spd. Auto. 42RLE Trans.
M =MEDIUM	J =JEEP - 4WD		ENR=2.8L 4 Cyl Turbo Diesel Eng.	DGV=4-Spd. Auto. VLP Trans.
P =PREMIUM	U =JEEP - 4WD (RHD)		ENJ=2.5L 4 Cyl 16V Turbo Diesel Eng.	DGQ=5-Spd Auto. 5-45RFE Trans.
			ED1=2.4L 4 Cyl DOHC 16v SMPI Eng.	DEH=6-Speed Man. NSG370 Trans.
				DDD=5-Speed HD Man. Trans.
				DDK=5-Speed HD Man. Trans.

Axle Shafts,Front
Figure 002-210

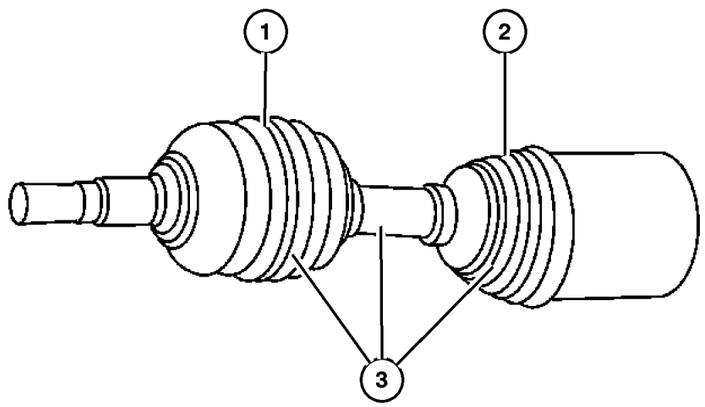

ITEM	PART NUMBER	QTY	LINE	SERIES	BODY	ENGINE	TRANS	TRIM	DESCRIPTION
Note:Sales Codes;									
[EK0]=Engines - All 3.7L 6 Cylinder Gas									
[EN0]=Engines - All 4/5 Cylinder Turbo Diesel									
1	5066 025AB	1	J, U						BOOT KIT, Half Shaft, Outer, Right or Left
2	5066 024AA	1	J, U						BOOT KIT, Half Shaft, Inner, Right or Left
3									SHAFT, Axle Half
	5066 020AA	1	J, U						[EK0], Right
	5066 021AA	1	J, U						[EK0], Left
	5066 022AA	1	J, U						[EN0], Right
	5066 023AA	1	J, U						[EN0], Left

2006 Liberty (KJ)

SERIES	LINE	BODY	ENGINE	TRANSMISSION
H =HIGHLINE	T =JEEP - 2WD	74 =SPORT UTILITY 4-DR	EKG=3.7L V6 Eng.	DG6=4-Spd. Auto. 42RLE Trans.
M =MEDIUM	J =JEEP - 4WD		ENR=2.8L 4 Cyl Turbo Diesel Eng.	DGV=4-Spd. Auto. VLP Trans.
P =PREMIUM	U =JEEP - 4WD (RHD)		ENJ=2.5L 4 Cyl 16V Turbo Diesel Eng.	DGQ=5-Spd Auto. 5-45RFE Trans.
			ED1=2.4L 4 Cyl DOHC 16v SMPI Eng.	DEH=6-Speed Man. NSG370 Trans.
				DDD=5-Speed HD Man. Trans.
				DDK=5-Speed HD Man. Trans.

Housing,Axle,Front
Figure 002-310

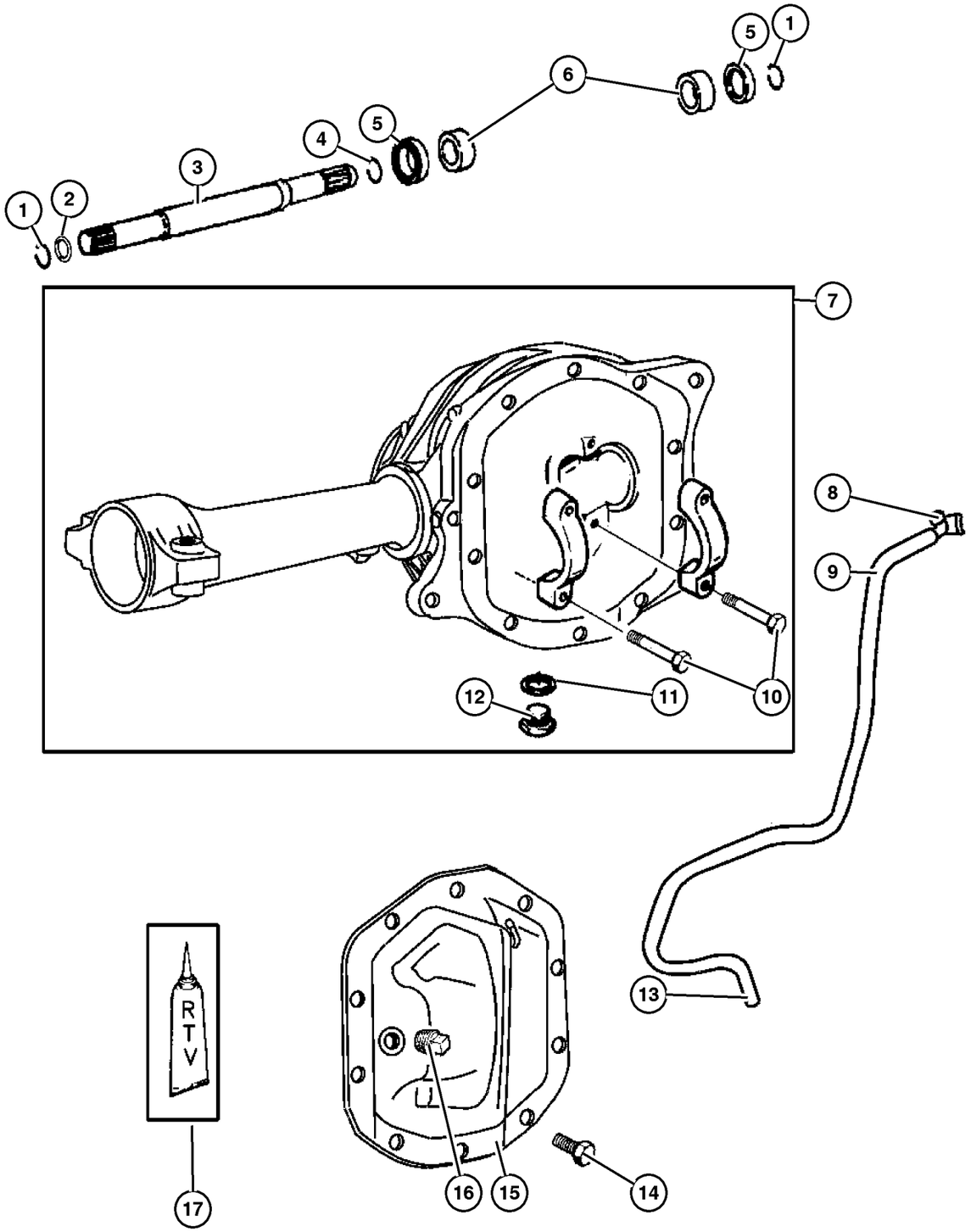

ITEM	PART NUMBER	QTY	LINE	SERIES	BODY	ENGINE	TRANS	TRIM	DESCRIPTION
1	5066 064AA	1	J, U						SNAP RING, Axle Shaft, Outboard
2	5066 067AA	1	J, U						O RING, Axle Shaft
3	5066 057AB	1	J, U						SHAFT, Axle
4	5069 009AA	1	J, U						RING, Axle Shaft, Outboard
5	5066 066AA	2	J, U						SEAL, Axle Drive Shaft
6	5066 056AB	2	J, U						BUSHING, Axle Shaft
7	5066 049AB	1	J, U						HOUSING, Front Axle
8	52104 552AB	1	J, U						VENT, Axle
9	HFV00 516AB	1	J, U						HOSE, Fuel And Vapor, 25 Foot Roll 5/16"
10	6035 985AA	4	J, U						BOLT, Differential
11	5066 055AA	1	J, U						O RING
12	5066 054AA	1	J, U						PLUG, Drain
13	6503 573	1							CLAMP, Hose
14	5069 008AA	1	J, U						BOLT KIT
15	5066 538AA	1	J, U						COVER, Differential
16	J400 4751	1	J, U						PLUG, Differential Cover
17	5010 884AA	1	J, U						SEALANT, RTV

2006 Liberty (KJ)

SERIES	LINE	BODY	ENGINE	TRANSMISSION
H =HIGHLINE	T =JEEP - 2WD	74 =SPORT UTILITY 4-DR	EKG=3.7L V6 Eng.	DG6=4-Spd. Auto. 42RLE Trans.
M =MEDIUM	J =JEEP - 4WD		ENR=2.8L 4 Cyl Turbo Diesel Eng.	DGV=4-Spd. Auto. VLP Trans.
P =PREMIUM	U =JEEP - 4WD (RHD)		ENJ=2.5L 4 Cyl 16V Turbo Diesel Eng.	DGQ=5-Spd Auto. 5-45RFE Trans.
			ED1=2.4L 4 Cyl DOHC 16v SMPI Eng.	DEH=6-Speed Man. NSG370 Trans.
				DDD=5-Speed HD Man. Trans.
				DDK=5-Speed HD Man. Trans.

Axle Assembly,Front
Figure 002-410

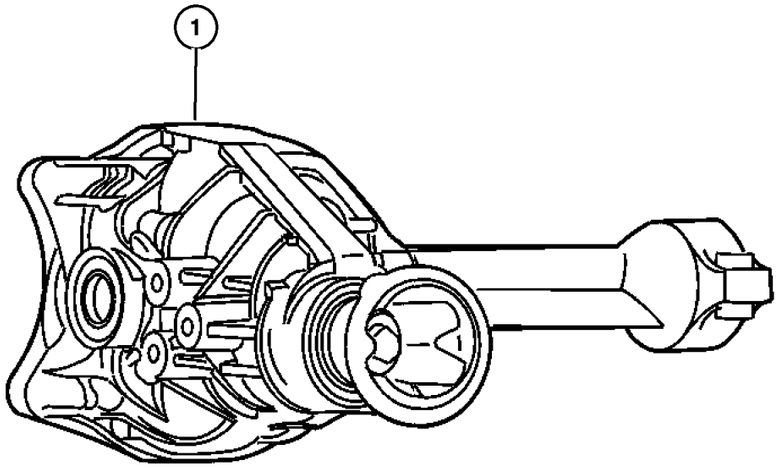

ITEM	PART NUMBER	QTY	LINE	SERIES	BODY	ENGINE	TRANS	TRIM	DESCRIPTION
Note:Sales Codes;									
[DMD]=Axle Ratio - 3.55									
[DME]=Axle Ratio - 3.73									
1									AXLE, Service Front
	5135 252AB	1	J, U						[DMD] With Tag 52114037AB
	5066 068AD	1	J, U						[DME] With Tag 52111137AG
	5135 252AB	1	J, U						[DMD] With Tag 52114355AB
	5066 068AD	1	J, U						[DME] With Tag 52114038AB

2006 Liberty (KJ)

SERIES	LINE	BODY	ENGINE	TRANSMISSION
H =HIGHLINE	T =JEEP - 2WD	74 =SPORT UTILITY 4-DR	EKG=3.7L V6 Eng.	DG6=4-Spd. Auto. 42RLE Trans.
M =MEDIUM	J =JEEP - 4WD		ENR=2.8L 4 Cyl Turbo Diesel Eng.	DGV=4-Spd. Auto. VLP Trans.
P =PREMIUM	U =JEEP - 4WD (RHD)		ENJ=2.5L 4 Cyl 16V Turbo Diesel Eng.	DGQ=5-Spd Auto. 5-45RFE Trans.
			ED1=2.4L 4 Cyl DOHC 16v SMPI Eng.	DEH=6-Speed Man. NSG370 Trans.
				DDD=5-Speed HD Man. Trans.
				DDK=5-Speed HD Man. Trans.

Differential,Front Axle
Figure 002-610

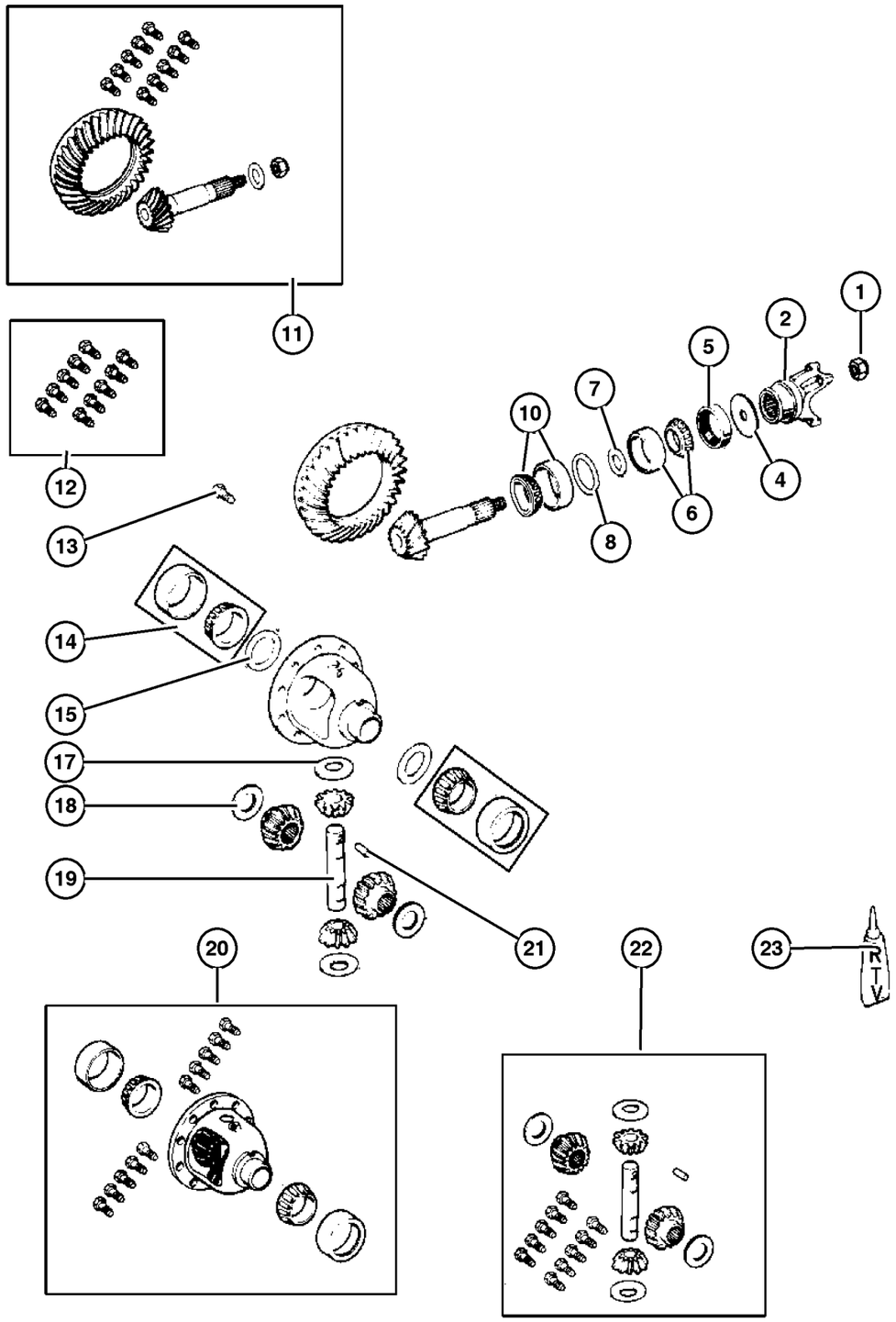

ITEM	PART NUMBER	QTY	LINE	SERIES	BODY	ENGINE	TRANS	TRIM	DESCRIPTION
Note:Sales Codes;									
[DMD]=Axle Ratio - 3.55									
[DME]=Axle Ratio - 3.73									
1	4720 895	1	J, U						NUT, Pinion Yoke
2	5066 050AC	1	J, U						YOKE, Axle
-3	5066 067AA-	1	J, U						O RING, Fits Over Hub of Yoke
4	5066 052AA	1	J, U						SLINGER, Drive Pinion
5	5066 053AA	1	J, U						SEAL, Drive Pinion
6	J812 6499	1	J, U						BEARING, Drive Pinion, Bearing and Cup, Front
7	5066 047AA	1	J, U						SPACER, Crush
8									SHIM, Drive Pinion Bearing
	5066 584AA	1	J, U						[.034]
	5066 585AA	1	J, U						[.035]
	5066 586AA	1	J, U						[.036]
	5066 587AA	1	J, U						[.037]
	5066 588AA	1	J, U						[.038]
	5066 589AA	1	J, U						[.039]
	5066 590AA	1	J, U						[.040]
	5066 591AA	1	J, U						[.041]
	5066 592AA	1	J, U						[.042]
	5066 593AA	1	J, U						[.043]
	5066 594AA	1	J, U						[.044]
	5066 572AA	1	J, U						[.045]
	5066 573AA	1	J, U						[.046]
	5066 574AA	1	J, U						[.047]
	5066 575AA	1	J, U						[.048]
	5066 576AA	1	J, U						[.049]
	5066 577AA	1	J, U						[.050]
	5066 578AA	1	J, U						[.051]
	5066 579AA	1	J, U						[.052]
	5066 580AA	1	J, U						[.053]
	5066 595AA	1	J, U						[.054]
	5066 581AA	1	J, U						[.055]
	5066 582AA	1	J, U						[.056]
	5066 583AA	1	J, U						[.057]
	5066 596AA	1	J, U						[.058]
-9	5066 533AA-	1	J, U						SHIM KIT, Pinion Shaft, Contains 1 Each of Item 8
10	4746 979	1	J, U						BEARING, Drive Pinion, Bearing and Cup, Rear
11									GEAR KIT, Ring And Pinion

2006 Liberty (KJ)

SERIES	LINE	BODY	ENGINE	TRANSMISSION
H =HIGHLINE	T =JEEP - 2WD	74 =SPORT UTILITY 4-DR	EKG=3.7L V6 Eng.	DG6=4-Spd. Auto. 42RLE Trans.
M =MEDIUM	J =JEEP - 4WD		ENR=2.8L 4 Cyl Turbo Diesel Eng.	DGV=4-Spd. Auto. VLP Trans.
P =PREMIUM	U =JEEP - 4WD (RHD)		ENJ=2.5L 4 Cyl 16V Turbo Diesel Eng.	DGQ=5-Spd Auto. 5-45RFE Trans.
			ED1=2.4L 4 Cyl DOHC 16v SMPI Eng.	DEH=6-Speed Man. NSG370 Trans.
				DDD=5-Speed HD Man. Trans.
				DDK=5-Speed HD Man. Trans.

AR = Use as required - = Non illustrated part # = New this model year

Differential,Front Axle
Figure 002-610

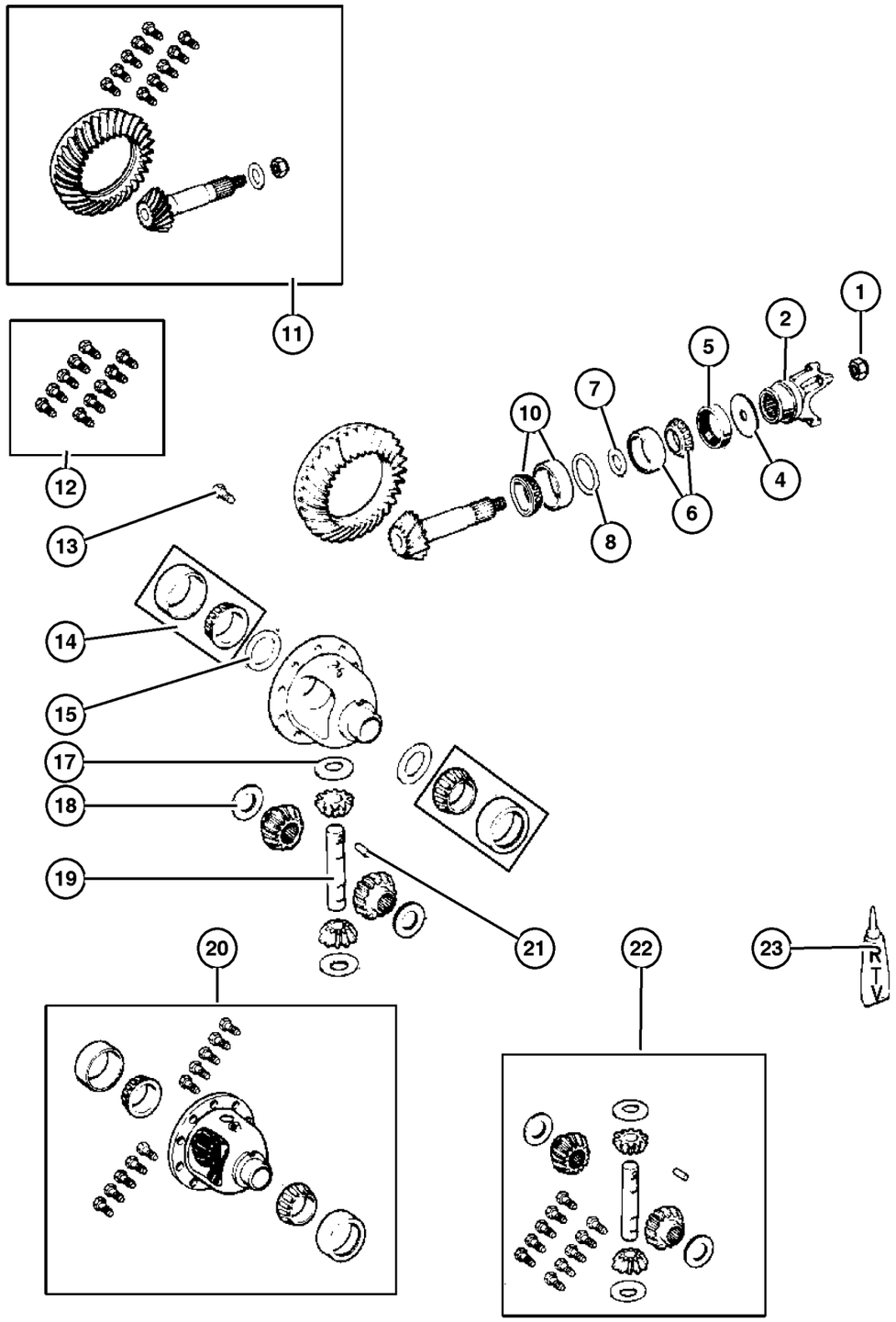

ITEM	PART NUMBER	QTY	LINE	SERIES	BODY	ENGINE	TRANS	TRIM	DESCRIPTION
	5135 255AA	1	J, U						[DMD]
	5066 051AA	1	J, U						[DME]
12	5069 008AA	1	J, U						BOLT KIT, Contains 10 of Item 13
13	5252 503	10	J, U						SCREW, Drive Gear, Mounting
14	J812 6500	1	J, U						BEARING, Differential, Contains 2
									Cups and 2 Cones
15									SHIM, Differential Bearing
	5017 218AA	1	J, U						[.109"]
	5017 219AA	1	J, U						[.110"]
	5017 220AA	1	J, U						[.111"]
	5017 221AA	1	J, U						[.112"]
	5017 222AA	1	J, U						[.113"]
	5017 223AA	1	J, U						[.114"]
	5017 224AA	1	J, U						[.115"]
	5017 225AA	1	J, U						[.116"]
	5017 226AA	1	J, U						[.117"]
	5017 227AA	1	J, U						[.118"]
	5017 228AA	1	J, U						[.119"]
	5017 229AA	1	J, U						[.120"]
	5017 230AA	1	J, U						[.121"]
	5017 231AA	1	J, U						[.122"]
	5017 232AA	1	J, U						[.123"]
	5017 233AA	1	J, U						[.124"]
	5017 234AA	1	J						[.125"]
	5017 235AA	1	J, U						[.126"]
	5017 236AA	1	J, U						[.127"]
	5017 237AA	1	J, U						[.128"]
	5017 238AA	1	J, U						[.129"]
	5017 239AA	1	J, U						[.130"]
	5017 240AA	1	J, U						[.131"]
	5017 241AA	1	J, U						[.132"]
	5017 242AA	1	J, U						[.133"]
	5017 243AA	1	J, U						[.134"]
	5017 244AA	1	J, U						[.135"]
	5017 245AA	1	J, U						[.136"]
	5017 246AA	1	J, U						[.137"]
	5017 247AA	1	J, U						[.138"]
	5017 248AA	1	J, U						[.139"]
	5017 249AA	1	J, U						[.140"]
	5017 250AA	1	J, U						[.141"]
	5017 251AA	1	J, U						[.142"]
	5017 252AA	1	J, U						[.143"]

2006 Liberty (KJ)

SERIES	LINE	BODY	ENGINE	TRANSMISSION
H =HIGHLINE	T =JEEP - 2WD	74 =SPORT UTILITY 4-DR	EKG=3.7L V6 Eng.	DG6=4-Spd. Auto. 42RLE Trans.
M =MEDIUM	J =JEEP - 4WD		ENR=2.8L 4 Cyl Turbo Diesel Eng.	DGV=4-Spd. Auto. VLP Trans.
P =PREMIUM	U =JEEP - 4WD (RHD)		ENJ=2.5L 4 Cyl 16V Turbo Diesel Eng.	DGQ=5-Spd Auto. 5-45RFE Trans.
			ED1=2.4L 4 Cyl DOHC 16v SMPI Eng.	DEH=6-Speed Man. NSG370 Trans.
				DDD=5-Speed HD Man. Trans.
				DDK=5-Speed HD Man. Trans.

Differential,Front Axle
Figure 002-610

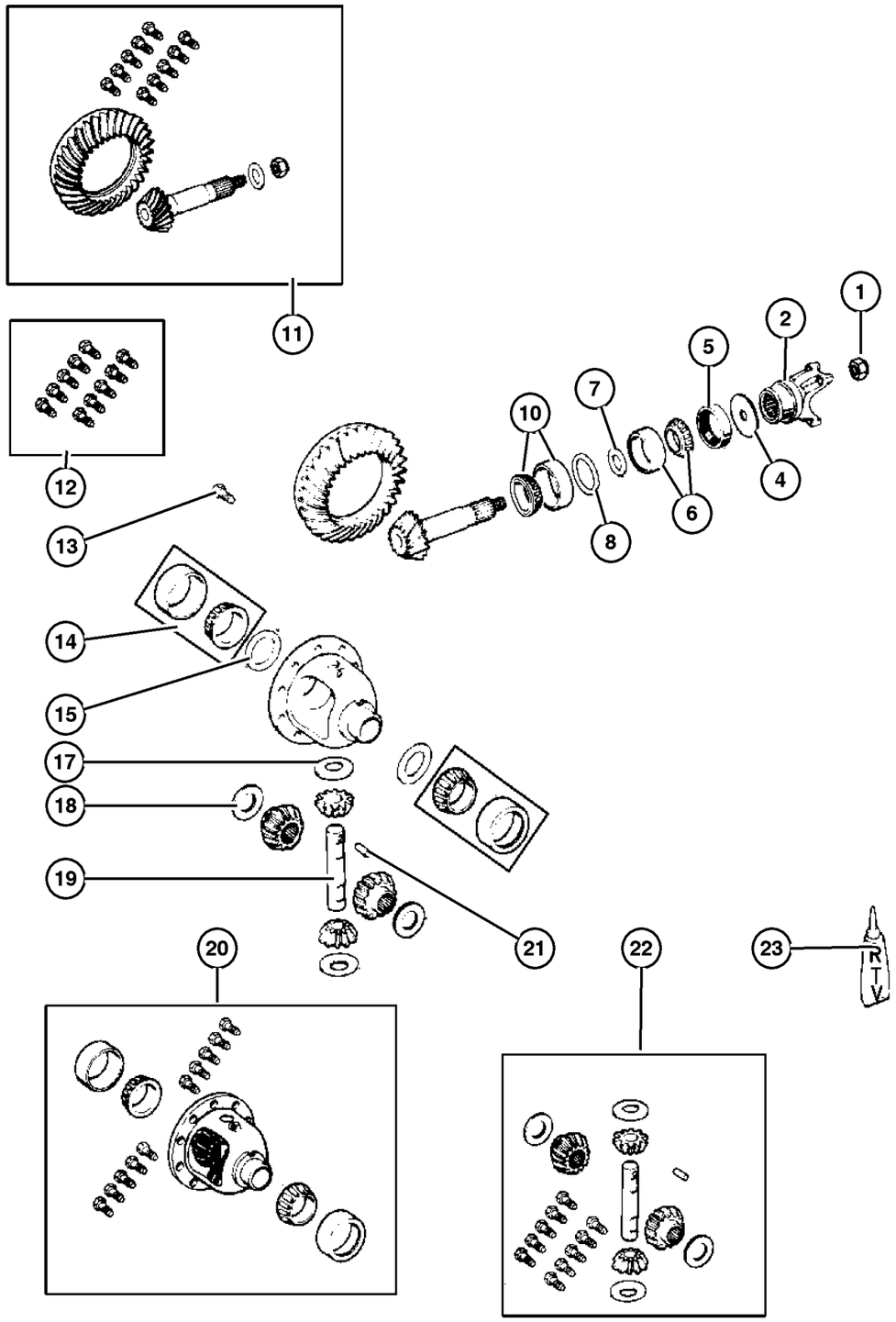

ITEM	PART NUMBER	QTY	LINE	SERIES	BODY	ENGINE	TRANS	TRIM	DESCRIPTION
	5017 253AA	1	J, U						[.144"]
	5017 254AA	1	J, U						[.145"]
	5017 255AA	1	J, U						[.146"]
	5017 256AA	1	J, U						[.147"]
	5017 257AA	1	J, U						[.148"]
-16	5066 539AA-	1	J, U						SHIM KIT, Differential, Contains 1 Each of Item 14
17	J812 0831	1	J, U						WASHER, Pinion Gear, Thrust
18	J812 0832	1	J, U						WASHER, Side Gear, Thrust
19	5003 840AA	1	J, U						SHAFT, Differential
20									CASE, Differential
	5066 529AA	1	J, U						[DME] With Internal Parts
	5135 254AA	1	J, U						[DMD] With Internal Parts
21	1791 563	1	J, U						PIN, Differential Shaft
22	5066 530AA	1	J, U						GEAR KIT, Center Differential
23	5010 884AA	1	J, U						SEALANT, RTV

2006 Liberty (KJ)

SERIES	LINE	BODY	ENGINE	TRANSMISSION
H =HIGHLINE	T =JEEP - 2WD	74 =SPORT UTILITY 4-DR	EKG=3.7L V6 Eng.	DG6=4-Spd. Auto. 42RLE Trans.
M =MEDIUM	J =JEEP - 4WD		ENR=2.8L 4 Cyl Turbo Diesel Eng.	DGV=4-Spd. Auto. VLP Trans.
P =PREMIUM	U =JEEP - 4WD (RHD)		ENJ=2.5L 4 Cyl 16V Turbo Diesel Eng.	DGQ=5-Spd Auto. 5-45RFE Trans.
			ED1=2.4L 4 Cyl DOHC 16v SMPI Eng.	DEH=6-Speed Man. NSG370 Trans.
				DDD=5-Speed HD Man. Trans.
				DDK=5-Speed HD Man. Trans.

Skid Plate,Front Axle
Figure 002-810

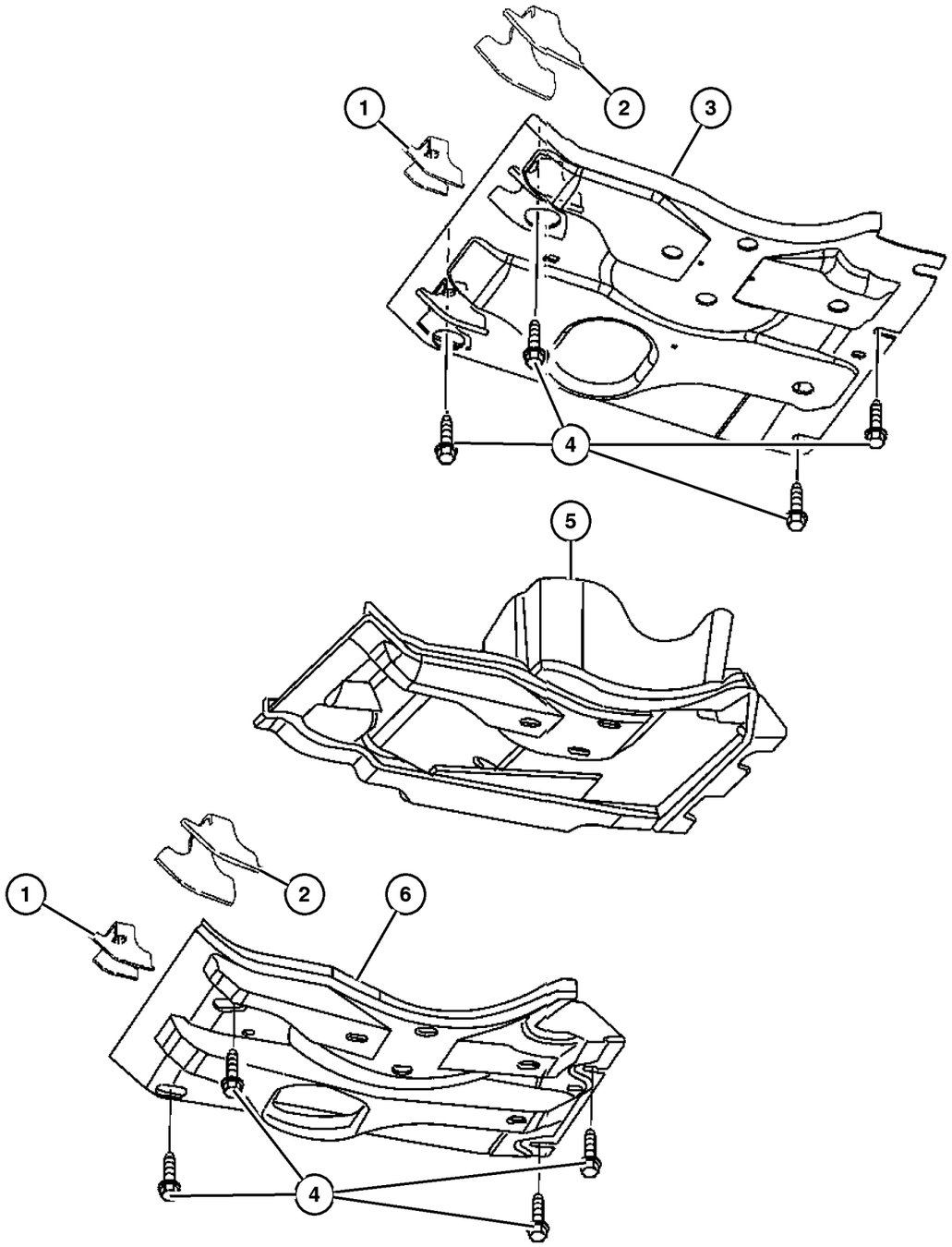

ITEM	PART NUMBER	QTY	LINE	SERIES	BODY	ENGINE	TRANS	TRIM	DESCRIPTION
Note:Sales Codes;									
[EN0]-Engines - All 4/5 Cylinder Turbo Diesel									
[XEU]=Skid Plate - Front Suspension									
1	52128 544AA	1	J, U						BRACKET, Skid Plate, Right
2	52128 545AA	1	J, U						BRACKET, Skid Plate, Left
3	52129 092AA	1	J, U						SKID PLATE, Front, [XEU]
4									SCREW
	6104 416AA	4	J, U						[EN0], Mounting
		4	J, U						[EN0] Without [XEU], Mounting
5	52129 093AC	1	J, U						BELLY PAN, Front, [EN0]
6	52129 290AA	1	J, U						SUPPORT ASSY, Frt Belly Pan, [EN0] Without [XEU]

2006 Liberty (KJ)

SERIES	LINE	BODY	ENGINE	TRANSMISSION
H =HIGHLINE	T =JEEP - 2WD	74 =SPORT UTILITY 4-DR	EKG=3.7L V6 Eng.	DG6=4-Spd. Auto. 42RLE Trans.
M =MEDIUM	J =JEEP - 4WD		ENR=2.8L 4 Cyl Turbo Diesel Eng.	DGV=4-Spd. Auto. VLP Trans.
P =PREMIUM	U =JEEP - 4WD (RHD)		ENJ=2.5L 4 Cyl 16V Turbo Diesel Eng.	DGQ=5-Spd Auto. 5-45RFE Trans.
			ED1=2.4L 4 Cyl DOHC 16v SMPI Eng.	DEH=6-Speed Man. NSG370 Trans.
				DDD=5-Speed HD Man. Trans.
				DDK=5-Speed HD Man. Trans.

Group – 003

Rear Axle

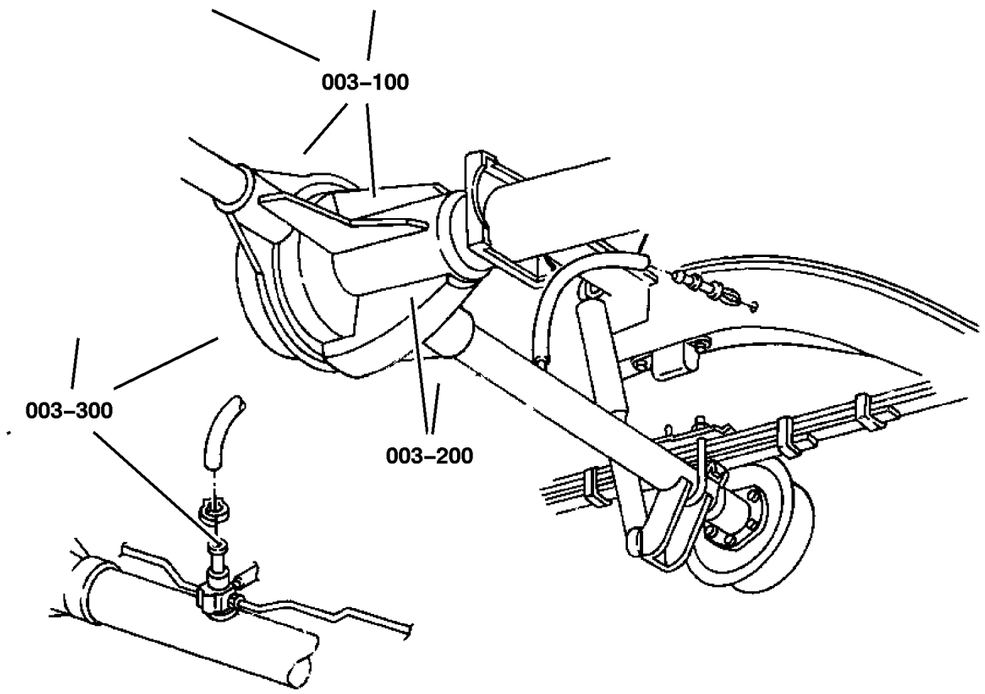

003–100 Rear Axle	003–200 Differential and Housing	003–300 Rear Axle Vent	
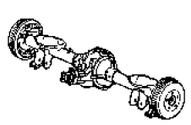	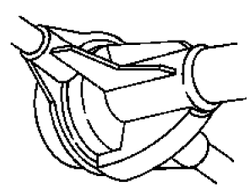	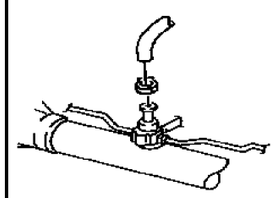	

GROUP 3 - Rear Axle

Illustration Title — Group-Fig. No.

Rear Axle

Axle Assembly,Rear,Corporate 8.25 [DRA] . . . . . Fig. 003-110

Differential and Housing

Axle,Rear,with Differential and Housing,Corporate 8.25 [DRA] . . . . . Fig. 003-210

Rear Axle Vent

Vent,Rear Axle . . . . . Fig. 003-310

Axle Assembly,Rear,Corporate 8.25 [DRA]
Figure 003-110

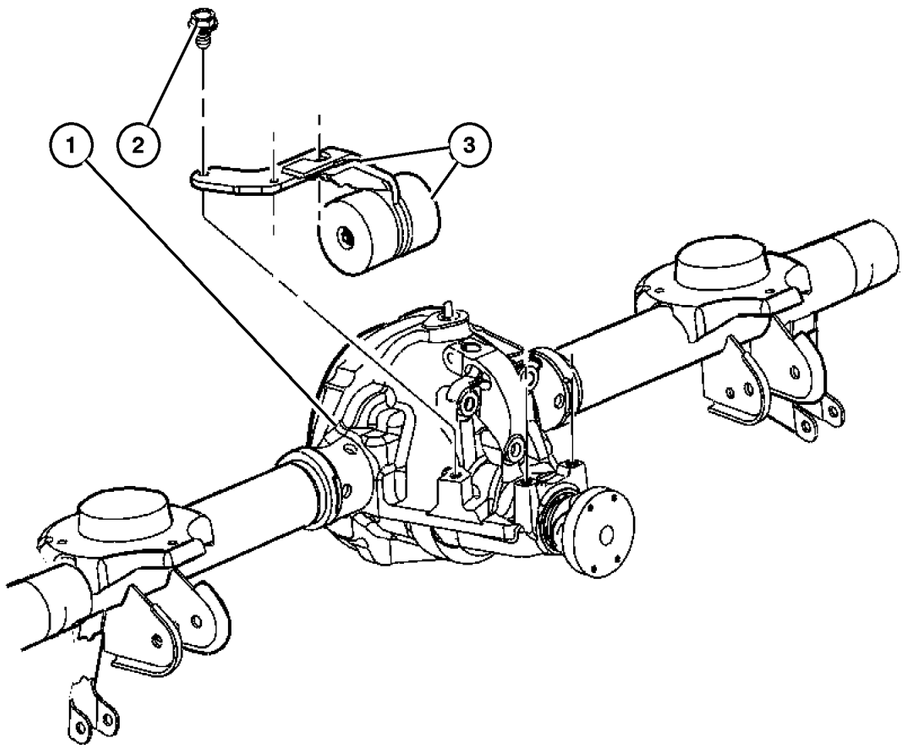

ITEM	PART NUMBER	QTY	LINE	SERIES	BODY	ENGINE	TRANS	TRIM	DESCRIPTION
Note: Sales Codes									
[DMD]=Axle Ratio - 3.55									
[DME]=Axle Ratio - 3.73									
[DRA]=Axle - Rear, Corporate 8.25									
1									AXLE, Service Rear
	5170 338AA	1							[DMD]
	5170 340AA	1							[DME]
2	6507 369AA	3							BOLT, Axle Damper, Mounting
3	52111 360AE	1							DAMPER, Axle

2006 Liberty (KJ)

SERIES	LINE	BODY	ENGINE	TRANSMISSION
H =HIGHLINE	T =JEEP - 2WD	74 =SPORT UTILITY 4-DR	EKG=3.7L V6 Eng.	DG6=4-Spd. Auto. 42RLE Trans.
M =MEDIUM	J =JEEP - 4WD		ENR=2.8L 4 Cyl Turbo Diesel Eng.	DGV=4-Spd. Auto. VLP Trans.
P =PREMIUM	U =JEEP - 4WD (RHD)		ENJ=2.5L 4 Cyl 16V Turbo Diesel Eng.	DGQ=5-Spd Auto. 5-45RFE Trans.
			ED1=2.4L 4 Cyl DOHC 16v SMPI Eng.	DEH=6-Speed Man. NSG370 Trans.
				DDD=5-Speed HD Man. Trans.
				DDK=5-Speed HD Man. Trans.

Axle,Rear,with Differential and Housing,Corporate 8.25 [DRA]
Figure 003-210

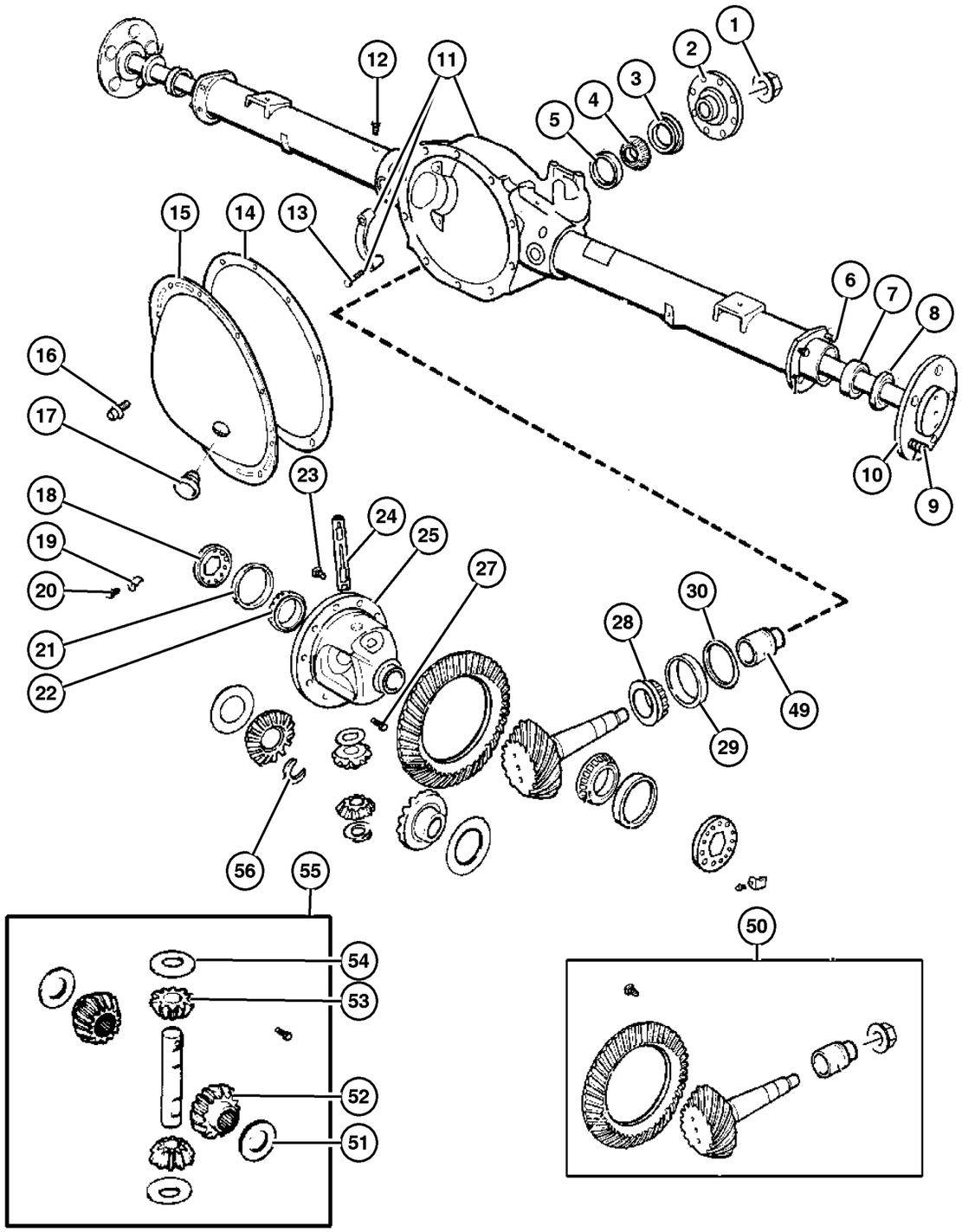

ITEM	PART NUMBER	QTY	LINE	SERIES	BODY	ENGINE	TRANS	TRIM	DESCRIPTION
Note: Sales Codes;									
[DMD]=Axle Ratio - 3.55									
[DME] = Axle Ratio - 3.73									
[DRA] =Axle - Rear, Corporate 8.25									
1	6036 572AA	1							NUT, Hex, .875-14
2	5210 5065	1							FLANGE, Driveshaft Yoke
3	52070 339AB	1							SEAL, Drive Pinion
4	2070 316	1							BEARING, Drive Pinion, Front
5	2070 317	1							CUP, Drive Pinion Bearing, Front
6	6036 595AA	8							STUD
7	3507 898AB	2							BEARING, Wheel
8	52070 427AB	2							SEAL, Axle Drive Shaft
9	6036 123AA	10							STUD, Wheel
10	52114 423AA	2							SHAFT, Axle
11	5170 334AA	1							HOUSING, Axle
12	4137 696AB	1							BOLT, Axle Vent
13	3432 695	4							SCREW, Hex Head, .50-13x2.38
14	5010 884AA	1							SEALANT, RTV
15	3723 681AC	1							COVER, Differential
16	6033 043	10							SCREW AND WASHER, Hex Flange Head, .312-18x.562
17	52070 428AA	1							PLUG, Differential Cover
18	3507 876AB	2							ADJUSTER, Differential Bearing
19	3723 859	2							LOCK, Differential Bearing
20	6023 092	2							SCREW AND WASHER, Hex Head, .25-20x.50
21	3723 569	2							CUP, Differential Side Bearing
22	1790 541	2							BEARING, Differential
23	6507 634AA	10							BOLT, Ring Gear, Mounting
24	5206 9657	1							SHAFT, Differential Pinion, Also Serviced In Differential Gear Package
25	52114 057AA	1							CASE, Differential, With Internal Parts
-26	4384 226	1							TONE RING, Sensor
27	3507 724	1							SCREW, Hex Head, .312-18x1.80, Also Serviced in Differential Gear Package
28	2800 484	1							BEARING, Drive Pinion, Rear
29	2800 485	1							CUP, Drive Pinion Bearing, Rear
30	3723 520	AR							SHIM, Drive Pinion Bearing, .020
-31	3723 521	AR							SHIM, Drive Pinion Bearing, .021
-32	3723 522	AR							SHIM, Drive Pinion Bearing, .022

2006 Liberty (KJ)

SERIES	LINE	BODY	ENGINE	TRANSMISSION
H =HIGHLINE	T =JEEP - 2WD	74 =SPORT UTILITY 4-DR	EKG=3.7L V6 Eng.	DG6=4-Spd. Auto. 42RLE Trans.
M =MEDIUM	J =JEEP - 4WD		ENR=2.8L 4 Cyl Turbo Diesel Eng.	DGV=4-Spd. Auto. VLP Trans.
P =PREMIUM	U =JEEP - 4WD (RHD)		ENJ=2.5L 4 Cyl 16V Turbo Diesel Eng.	DGQ=5-Spd Auto. 5-45RFE Trans.
			ED1=2.4L 4 Cyl DOHC 16v SMPI Eng.	DEH=6-Speed Man. NSG370 Trans.
				DDD=5-Speed HD Man. Trans.
				DDK=5-Speed HD Man. Trans.

Axle,Rear,with Differential and Housing,Corporate 8.25 [DRA]
Figure 003-210

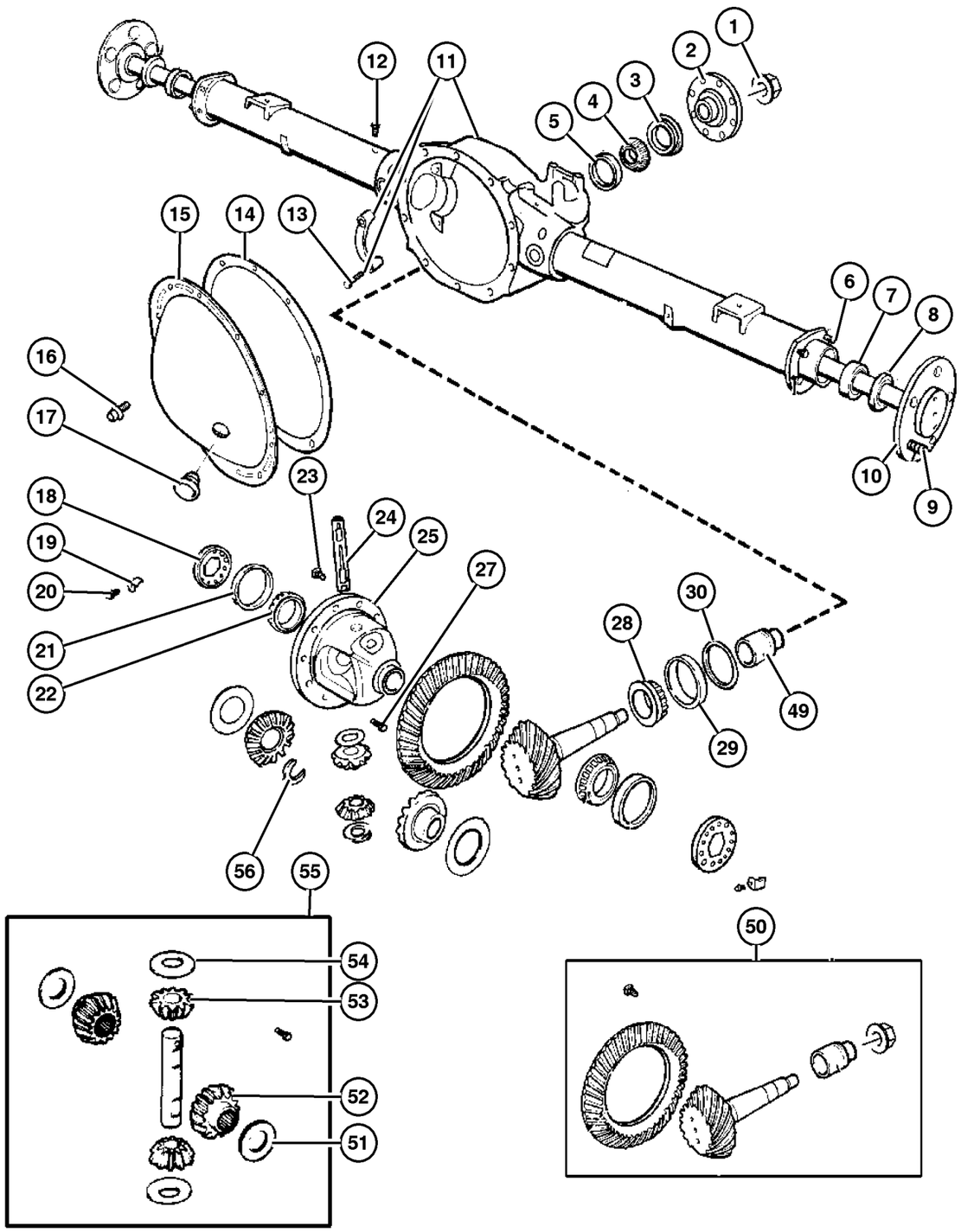

ITEM	PART NUMBER	QTY	LINE	SERIES	BODY	ENGINE	TRANS	TRIM	DESCRIPTION
-33	3723 523	AR							SHIM, Drive Pinion Bearing, .023
-34	3723 524	AR							SHIM, Drive Pinion Bearing, .024
-35	3723 525	AR							SHIM, Drive Pinion Bearing, .025
-36	3723 526	AR							SHIM, Drive Pinion Bearing, .026
-37	3723 527	AR							SHIM, Drive Pinion Bearing, .027
-38	3723 528	AR							SHIM, Drive Pinion Bearing, .028
-39	3723 529	AR							SHIM, Drive Pinion Bearing, .029
-40	3723 530	AR							SHIM, Drive Pinion Bearing, .030
-41	3723 531	AR							SHIM, Drive Pinion Bearing, .031
-42	3723 532	AR							SHIM, Drive Pinion Bearing, .032
-43	3723 533	AR							SHIM, Drive Pinion Bearing, .033
-44	3723 534	AR							SHIM, Drive Pinion Bearing, .034
-45	3723 535	AR							SHIM, Drive Pinion Bearing, .035
-46	3723 536	AR							SHIM, Drive Pinion Bearing, .036
-47	3723 537	AR							SHIM, Drive Pinion Bearing, .037
-48	3723 538	AR							SHIM, Drive Pinion Bearing, .038
49	3507 575	1							SPACER, Drive Pinion Bearing, Crush
50									GEAR KIT, Ring And Pinion
	5135 943AB	1							[DMD]
	5143 812AA	1							[DME]
51	4883 085	1							WASHER PACKAGE, Side Gear Thrust
52									GEAR, Differential, Serviced In Differential Gear Package, (NOT SERVICED) (Not Serviced)
53									PINION, Differential, Serviced In Differential Gear Package, (NOT SERVICED) (Not Serviced)
54	2852 912	2							WASHER, Pinion Gear, Thrust
55	4883 087AB	1							GEAR PACKAGE, Differential
56	5206 9426	2							RETAINER, Axle Shaft

2006 Liberty (KJ)

SERIES	LINE	BODY	ENGINE	TRANSMISSION
H =HIGHLINE	T =JEEP - 2WD	74 =SPORT UTILITY 4-DR	EKG=3.7L V6 Eng.	DG6=4-Spd. Auto. 42RLE Trans.
M =MEDIUM	J =JEEP - 4WD		ENR=2.8L 4 Cyl Turbo Diesel Eng.	DGV=4-Spd. Auto. VLP Trans.
P =PREMIUM	U =JEEP - 4WD (RHD)		ENJ=2.5L 4 Cyl 16V Turbo Diesel Eng.	DGQ=5-Spd Auto. 5-45RFE Trans.
			ED1=2.4L 4 Cyl DOHC 16v SMPI Eng.	DEH=6-Speed Man. NSG370 Trans.
				DDD=5-Speed HD Man. Trans.
				DDK=5-Speed HD Man. Trans.

AR = Use as required - = Non illustrated part # = New this model year

Vent,Rear Axle
Figure 003-310

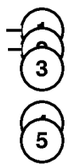

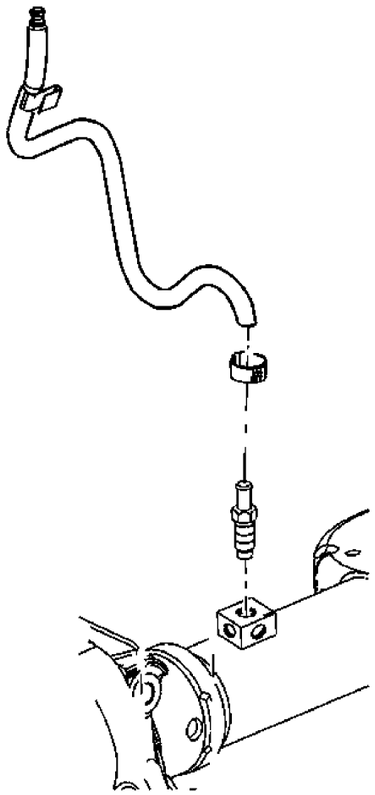

ITEM	PART NUMBER	QTY	LINE	SERIES	BODY	ENGINE	TRANS	TRIM	DESCRIPTION
1	J535 2955	1							VENT, Axle, Upper
2	6032 633AB	1							CLIP, Vent Tube, Axle Vent Hose, Upper
3	HFV00 516AB	1							HOSE, Fuel And Vapor, 25 Foot Roll 5/16"
4	6503 573	1							CLAMP, Hose, To Axle Vent Bolt, Lower
5	4137 696AB	1							BOLT, Axle Vent

2006 Liberty (KJ)

SERIES	LINE	BODY	ENGINE	TRANSMISSION
H =HIGHLINE	T =JEEP - 2WD	74 =SPORT UTILITY 4-DR	EKG=3.7L V6 Eng.	DG6=4-Spd. Auto. 42RLE Trans.
M =MEDIUM	J =JEEP - 4WD		ENR=2.8L 4 Cyl Turbo Diesel Eng.	DGV=4-Spd. Auto. VLP Trans.
P =PREMIUM	U =JEEP - 4WD (RHD)		ENJ=2.5L 4 Cyl 16V Turbo Diesel Eng.	DGQ=5-Spd Auto. 5-45RFE Trans.
			ED1=2.4L 4 Cyl DOHC 16v SMPI Eng.	DEH=6-Speed Man. NSG370 Trans.
				DDD=5-Speed HD Man. Trans.
				DDK=5-Speed HD Man. Trans.

AR = Use as required - = Non illustrated part # = New this model year

Group – 004

Parking Brake

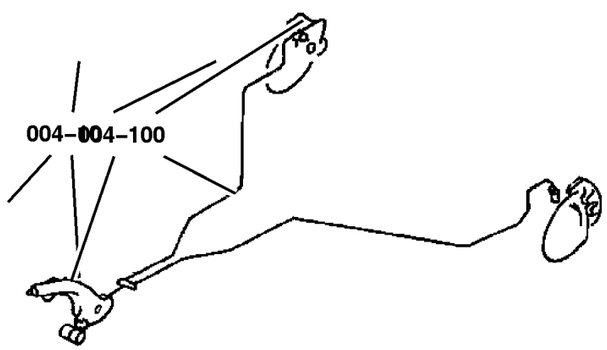

004–100 **Parking Brake Lever and Cables** 			

GROUP 4 - Parking Brake

Illustration Title — Group-Fig. No.

Parking Brake Lever and Cables

Parking Brake Lever and Cables . . . . . Fig. 004-110
Parking Brake Assembly,Rear,Disc . . . . . Fig. 004-120

Parking Brake Lever and Cables
Figure 004-110

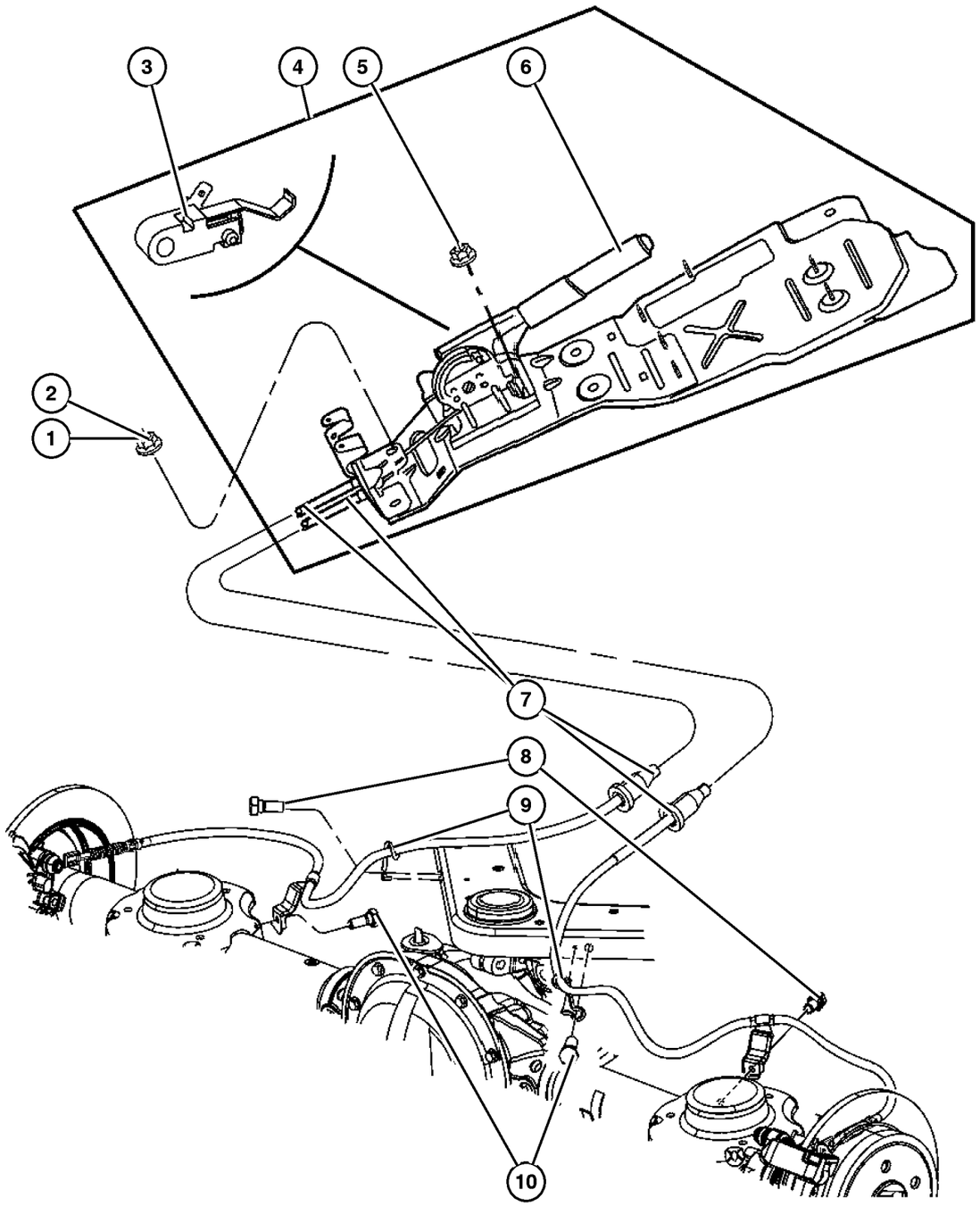

ITEM	PART NUMBER	QTY	LINE	SERIES	BODY	ENGINE	TRANS	TRIM	DESCRIPTION
Note:Sales Codes;									
[DEH]=Transmission-6-Speed Manual NSG 370									
[DG0]=Transmissions - All Automatic									
1	6505 245AA	4							NUT, M8x1.25, Park Brake Sled to Floor Pan, Mounting
2	3420 1358	1							NUT AND WASHER, Hex Nut-Sealing Washer, M6 x 1.00, [DEH] Only-Park Brake Sled to Floor Pan, Mounting
3	5209 922	1							SWITCH, Parking Brake
4									SLED, Parking Brake Lever
	52128 916AC	1							[DEH]
	52128 919AD	1							[DG0]
5	6502 720	3							NUT, Hex Flange Lock, M8x1.25, Park Brake Lever to Sled, Mounting
6	52128 860AC	1							LEVER, Park Brake, Includes Front Cable and Equalizer
7									CABLE, Parking Brake
	52128 510AG	1							Right
	52128 511AF	1							Left
8									SCREW, (NOT SERVICED) (Not Serviced)
9									CLIP, Cable Routing
	52128 612AB	1							Holds Cable to UCA, Right
	52128 613AB	1							Holds Cable to UCA, Left
10									SCREW, Hex Flange Head, M8x1.25x25.00, (NOT SERVICED) (Not Serviced)
-11	5602 1252	1							CLIP, Parking Brake Cable, Anti-Rotation Clip
-12	4793 138	1							INSULATOR, 6 Way Male, Goes to Park Brake Switch

2006 Liberty (KJ)

SERIES	LINE	BODY	ENGINE	TRANSMISSION
H =HIGHLINE	T =JEEP - 2WD	74 =SPORT UTILITY 4-DR	EKG=3.7L V6 Eng.	DG6=4-Spd. Auto. 42RLE Trans.
M =MEDIUM	J =JEEP - 4WD		ENR=2.8L 4 Cyl Turbo Diesel Eng.	DGV=4-Spd. Auto. VLP Trans.
P =PREMIUM	U =JEEP - 4WD (RHD)		ENJ=2.5L 4 Cyl 16V Turbo Diesel Eng.	DGQ=5-Spd Auto. 5-45RFE Trans.
			ED1=2.4L 4 Cyl DOHC 16v SMPI Eng.	DEH=6-Speed Man. NSG370 Trans.
				DDD=5-Speed HD Man. Trans.
				DDK=5-Speed HD Man. Trans.

Parking Brake Assembly,Rear,Disc
Figure 004-120

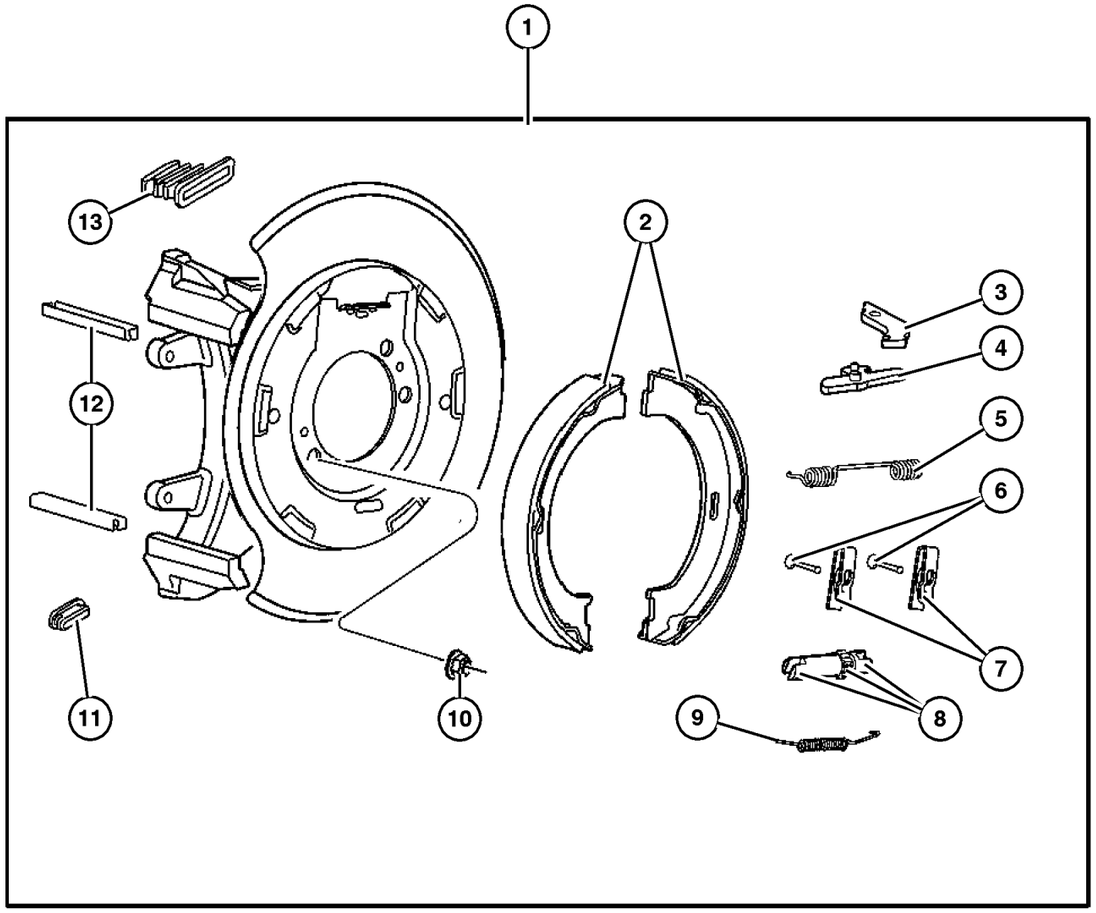

ITEM	PART NUMBER	QTY	LINE	SERIES	BODY	ENGINE	TRANS	TRIM	DESCRIPTION
1									ADAPTER, Parking Brake
	52129 176AA	1							Right
	52129 177AA	1							Left
2	5093 390AA	1							SHOE AND LINING KIT, Parking Brake, Complete Kit
3	5179 288AA	1							LEVER, Park Brake Adjusting
4									LEVER, Park Brake
	5179 290AA	1							Right
	5179 291AA	1							Left
5	5179 286AA	1							SPRING, Park Brake Shoe Return
6	4762 126	2							PIN, Brake Shoe Hold Down
7	4762 125	2							CLIP, Parking Brake Hold Down
8	5093 391AA	1							ADJUSTER, Parking Brake
9	4762 116	1							SPRING, Park Brake Shoe Return
10	6036 159AA	8							NUT, Hex, .375-24, Parking Brake Adapter to Axle Housing, Mounting
11	4762 121	1							PLUG, Brake Adjusting Hole
12	5093 394AB	4							SLIPPER, Caliper
13	5093 395AA	1							BOOT, Parking Brake Lever

2006 Liberty (KJ)

SERIES	LINE	BODY	ENGINE	TRANSMISSION
H =HIGHLINE	T =JEEP - 2WD	74 =SPORT UTILITY 4-DR	EKG=3.7L V6 Eng.	DG6=4-Spd. Auto. 42RLE Trans.
M =MEDIUM	J =JEEP - 4WD		ENR=2.8L 4 Cyl Turbo Diesel Eng.	DGV=4-Spd. Auto. VLP Trans.
P =PREMIUM	U =JEEP - 4WD (RHD)		ENJ=2.5L 4 Cyl 16V Turbo Diesel Eng.	DGQ=5-Spd Auto. 5-45RFE Trans.
			ED1=2.4L 4 Cyl DOHC 16v SMPI Eng.	DEH=6-Speed Man. NSG370 Trans.
				DDD=5-Speed HD Man. Trans.
				DDK=5-Speed HD Man. Trans.

Group – 005

Service Brakes

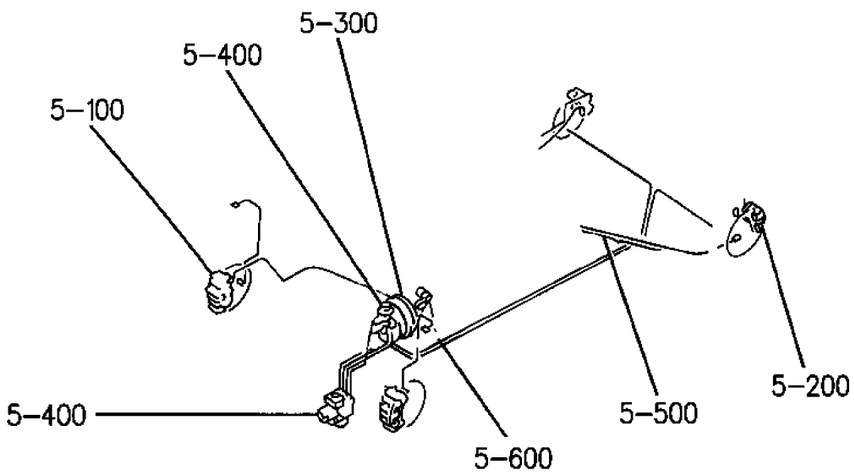

005–100 Front Brakes 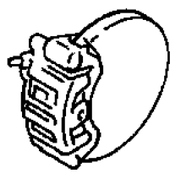	**005–200** Rear Brakes 	**005–300** Power Brake Booster 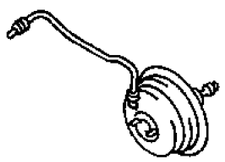	**005–400** Brake Master Cylinder 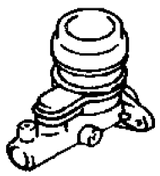
005–500 Brake Lines and Hoses 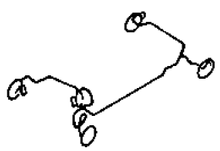	**005–600** Brake Pedals 		

GROUP 5 - Service Brakes

Illustration Title — Group-Fig. No.

Front Brakes
Brakes,Front . . . . . Fig. 005-110

Rear Brakes
Brakes,Rear,Disc . . . . . Fig. 005-210

Power Brake Booster
Booster,Power Brake . . . . . Fig. 005-310

Brake Master Cylinder
Master Cylinder,Brake . . . . . Fig. 005-410

Brake Lines and Hoses
Brake Lines,Front,LHD . . . . . Fig. 005-510
Brake Lines,Front,RHD . . . . . Fig. 005-520
Brake Lines,Rear . . . . . Fig. 005-530

Brake Pedals
Pedals,Brake and Clutch . . . . . Fig. 005-610

Brakes,Front
Figure 005-110

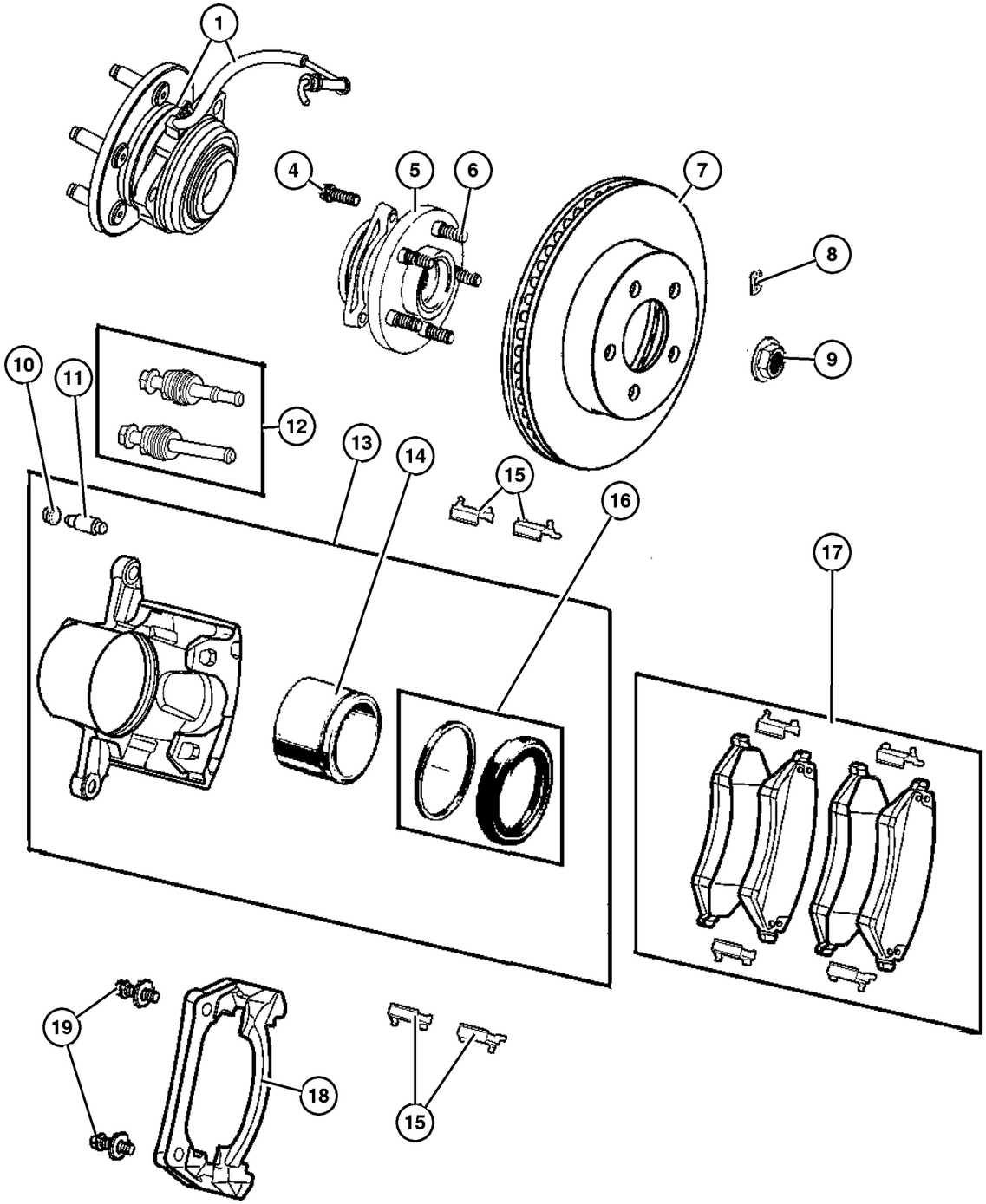

ITEM	PART NUMBER	QTY	LINE	SERIES	BODY	ENGINE	TRANS	TRIM	DESCRIPTION
Note:Sales Codes;									
[BRY]=Brakes - Anti-Lock 4 Wheel Disc									
1									SENSOR, Anti-Lock Brakes
	52128 694AE	1	J, T						Right
	52128 695AE	1	J, T						Left
-2	5175 374AA-	1	J, T						BOLT, ABS Sensor, Mounting
-3	52128 584AA-	1	J, T						CLIP, Wiring, Sensor Wire to Knuckle, Right or Left
4	6503 088	3	J, T						BOLT, Knuckle to Bearing Attaching, M12 x 1.75 x 43.00, Right or Left
5									HUB AND BEARING, Brake
	52128 692AE	1	J, T						Right
	52128 693AE	1	J, T						Left
6	6036 388AA	5	J, T						BOLT, Hub and Rotor, Right or Left
7	52128 247AA	1	J, T						ROTOR, Brake, Right or Left
8	6026 430	1	J, T						NUT, Push, Brake Rotor Retainer
9	6506 454AA	2	J, U						NUT, Hex, Halfshaft Retention
10	4238 717	1	J, T						CAP, Bleeder
11	3780 788	1	J, T						SCREW, Bleeder
12	5019 987AA	1	J, T						PIN KIT, Disc Brake, Right or Left
13									CALIPER, Disc Brake
	5066 422AA	1	J, T						Right
	5066 423AA	1	J, T						Left
14	5066 425AA	1	J, T						PISTON, Brake
15	5019 985AB	1	J, T						CLIP PACKAGE, Contains 4 Clips
16	5066 426AA	1	J, T						BOOT AND SEAL, Disc Brake
17	5066 427AA	1	J, T						PAD KIT, Front Disc Brake
18	5066 428AA	1	J, T						ADAPTER, Disc Brake Caliper, Right or Left
19	6102 149AA	2	J, T						BOLT, Caliper to Adapter, Mounting

2006 Liberty (KJ)

SERIES	LINE	BODY	ENGINE	TRANSMISSION
H =HIGHLINE	T =JEEP - 2WD	74 =SPORT UTILITY 4-DR	EKG=3.7L V6 Eng.	DG6=4-Spd. Auto. 42RLE Trans.
M =MEDIUM	J =JEEP - 4WD		ENR=2.8L 4 Cyl Turbo Diesel Eng.	DGV=4-Spd. Auto. VLP Trans.
P =PREMIUM	U =JEEP - 4WD (RHD)		ENJ=2.5L 4 Cyl 16V Turbo Diesel Eng.	DGQ=5-Spd Auto. 5-45RFE Trans.
			ED1=2.4L 4 Cyl DOHC 16v SMPI Eng.	DEH=6-Speed Man. NSG370 Trans.
				DDD=5-Speed HD Man. Trans.
				DDK=5-Speed HD Man. Trans.

Brakes,Rear,Disc
Figure 005-210

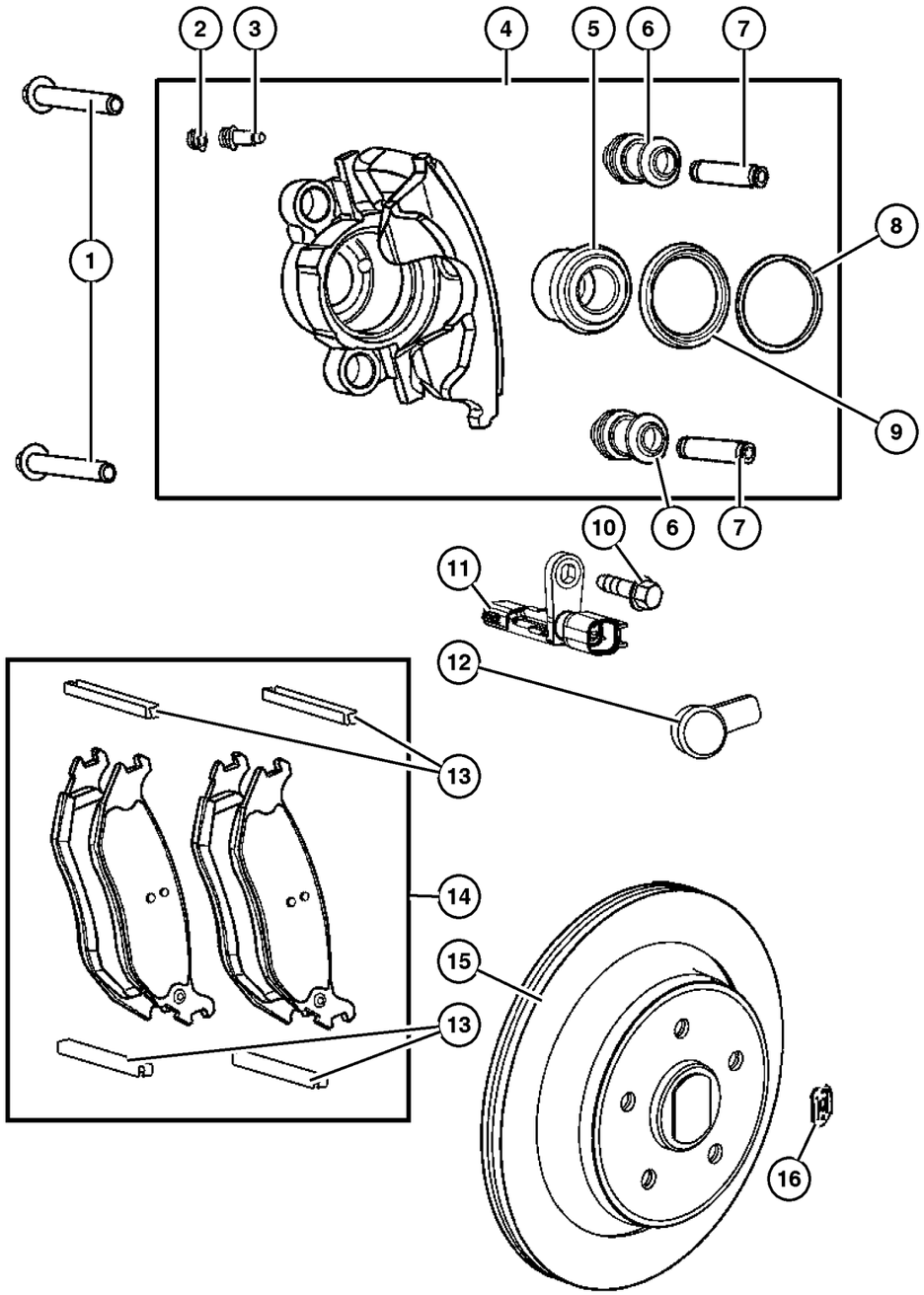

ITEM	PART NUMBER	QTY	LINE	SERIES	BODY	ENGINE	TRANS	TRIM	DESCRIPTION
1	6507 603AA	4							PIN, Caliper
2	5093 278AA	1							CAP, Bleeder
3	5179 732AA	1							BLEEDER SCREW, Brake
4									CALIPER, Disc Brake
	5179 730AA	1							Right
	5179 731AA	1							Left
5	5093 275AA	1							PISTON, Brake
6	4762 106	2							BUSHING, Caliper
7	5179 733AA	2							SLEEVE, Brake Caliper
8	5093 276AA	1							SEAL, Caliper Piston
9	5093 277AA	1							BOOT, Brake Piston
10	6105 036AA	2							SCREW AND WASHER, Hex Head, M6x1x16
11	52129 178AB	2							SENSOR, Wheel Speed
12	5179 287AA	1							COVER, Sensor, Right or Left
13	5093 394AB	4							SLIPPER, Caliper
14	5179 242AA	1							PAD KIT, Disc Brake
15	52128 411AB	2							ROTOR, Brake
16	6026 430	4							NUT, Push

2006 Liberty (KJ)

SERIES	LINE	BODY	ENGINE	TRANSMISSION
H =HIGHLINE	T =JEEP - 2WD	74 =SPORT UTILITY 4-DR	EKG=3.7L V6 Eng.	DG6=4-Spd. Auto. 42RLE Trans.
M =MEDIUM	J =JEEP - 4WD		ENR=2.8L 4 Cyl Turbo Diesel Eng.	DGV=4-Spd. Auto. VLP Trans.
P =PREMIUM	U =JEEP - 4WD (RHD)		ENJ=2.5L 4 Cyl 16V Turbo Diesel Eng.	DGQ=5-Spd Auto. 5-45RFE Trans.
			ED1=2.4L 4 Cyl DOHC 16v SMPI Eng.	DEH=6-Speed Man. NSG370 Trans.
				DDD=5-Speed HD Man. Trans.
				DDK=5-Speed HD Man. Trans.

Booster,Power Brake
Figure 005-310

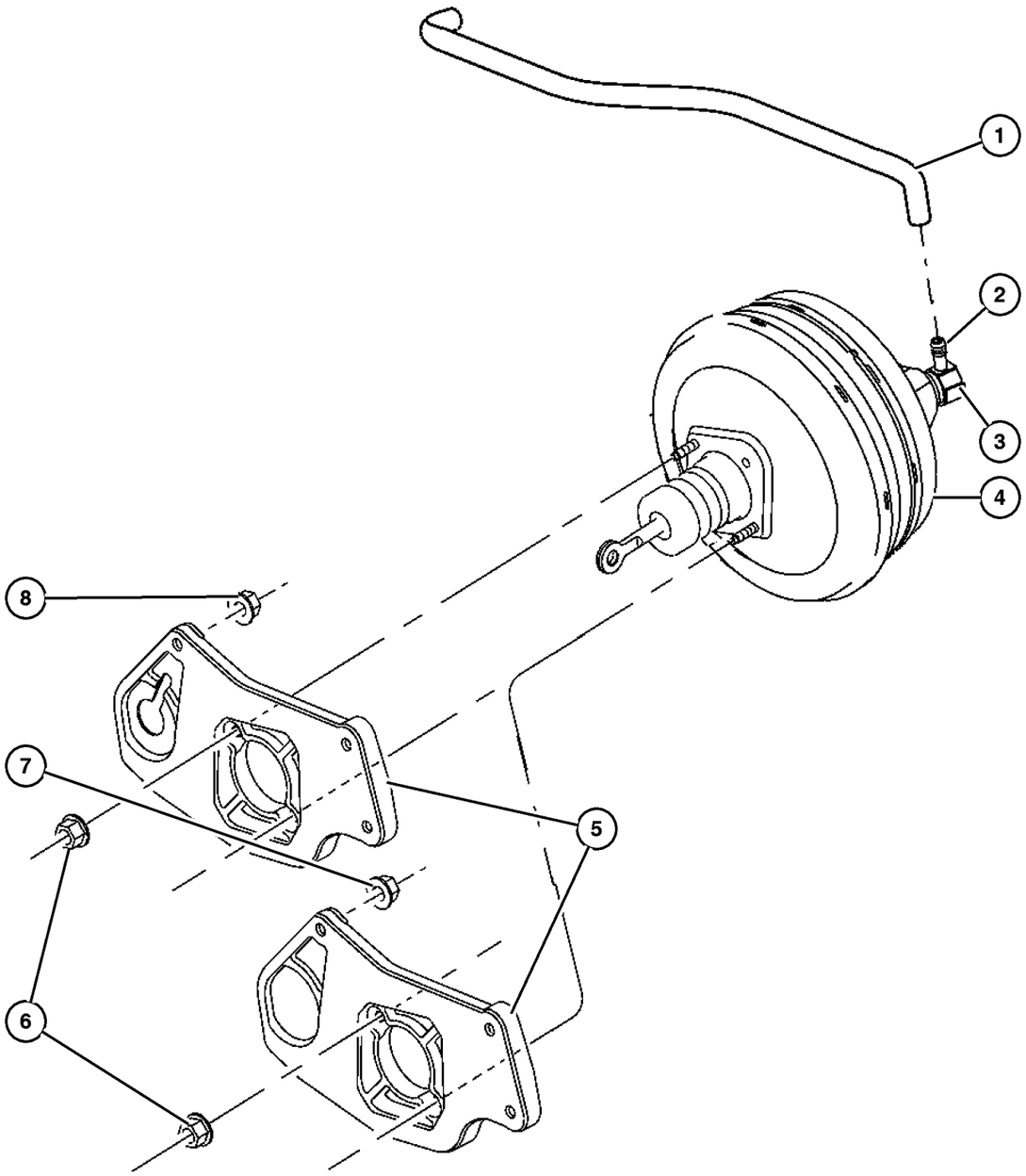

ITEM	PART NUMBER	QTY	LINE	SERIES	BODY	ENGINE	TRANS	TRIM	DESCRIPTION
Note: Sales Codes;									
[DBB]=Transmissions - All Manual									
[DG0]=Transmissions - All Automatic									
[EK0]=Engines - All 3.7L 6 Cylinder Gas									
[EN0]=Engines - All 4/5 Cylinder Turbo Diesel									
1									HOSE, Vacuum Supply
	52128 370AA	1	J, T						[EN0]-Engine To Booster
	52128 318AC	1	J, T						[EK0]-Engine To Booster
	52128 316AF	1	U						[EN0]-Engine To Booster
	52128 314AE	1	U						[EK0]-Engine To Booster
2									CAP, Vacuum Port
	5103 338AA	1	J, T						
		1	U						
3									VALVE, Vacuum Check
	5072 522AA	1	J, T						
		1	U						
4									BOOSTER, Power Brake
	5134 120AA	1	J, T						
		1	U						
5									BRACKET, Brake Booster
	52128 353AC	1	J, T						[DBB], Mounting
	52128 730AA	1	J, T						[DG0], Mounting
	52128 356AC	1	U						[DBB], Mounting
	52128 731AA	1	U						[DG0], Mounting
6	6506 386AA	2							NUT, Hex Flange With Serration, Brake Booster to Actuator Mounting Bracket, Mounting
7									NUT AND WASHER, Hex, M8x1.25
	6504 175	3	J, T						Actuator Mounting Bracket to Dash Panel, Mounting
		2	U						Actuator Mounting Bracket to Dash Panel, Mounting
8	6506 386AA	1	U						NUT, Hex Flange With Serration, Actuator Mounting Bracket to Dash Panel, Mounting

2006 Liberty (KJ)

SERIES	LINE	BODY	ENGINE	TRANSMISSION
H =HIGHLINE	T =JEEP - 2WD	74 =SPORT UTILITY 4-DR	EKG=3.7L V6 Eng.	DG6=4-Spd. Auto. 42RLE Trans.
M =MEDIUM	J =JEEP - 4WD		ENR=2.8L 4 Cyl Turbo Diesel Eng.	DGV=4-Spd. Auto. VLP Trans.
P =PREMIUM	U =JEEP - 4WD (RHD)		ENJ=2.5L 4 Cyl 16V Turbo Diesel Eng.	DGQ=5-Spd Auto. 5-45RFE Trans.
			ED1=2.4L 4 Cyl DOHC 16v SMPI Eng.	DEH=6-Speed Man. NSG370 Trans.
				DDD=5-Speed HD Man. Trans.
				DDK=5-Speed HD Man. Trans.

Master Cylinder,Brake
Figure 005-410

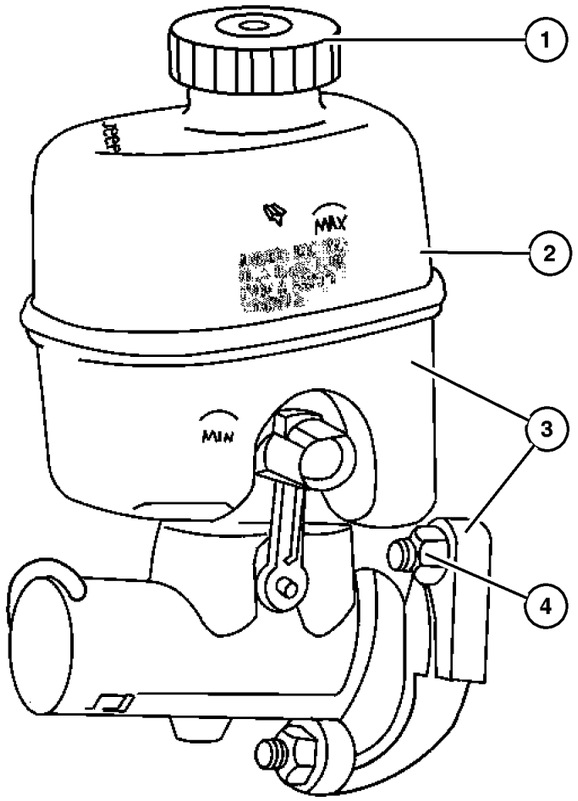

ITEM	PART NUMBER	QTY	LINE	SERIES	BODY	ENGINE	TRANS	TRIM	DESCRIPTION
1									CAP, Master Cylinder Reservoir
	4683 656	1	J, T						
		1	U						
2									RESERVOIR, Brake Master Cylinder, Order Item 3, (NOT SERVICED)
									(Not Serviced)
3									MASTER CYLINDER, Brake
	5189 227AA	1	J, T						With Reservoir and Cap
	5189 226AA	1	U						With Reservoir and Cap
4									NUT
	5072 523AA	1	J, T						Master Cylinder to Booster, Mounting
		1	U						Master Cylinder to Booster, Mounting

2006 Liberty (KJ)

SERIES	LINE	BODY	ENGINE	TRANSMISSION
H =HIGHLINE	T =JEEP - 2WD	74 =SPORT UTILITY 4-DR	EKG=3.7L V6 Eng.	DG6=4-Spd. Auto. 42RLE Trans.
M =MEDIUM	J =JEEP - 4WD		ENR=2.8L 4 Cyl Turbo Diesel Eng.	DGV=4-Spd. Auto. VLP Trans.
P =PREMIUM	U =JEEP - 4WD (RHD)		ENJ=2.5L 4 Cyl 16V Turbo Diesel Eng.	DGQ=5-Spd Auto. 5-45RFE Trans.
			ED1=2.4L 4 Cyl DOHC 16v SMPI Eng.	DEH=6-Speed Man. NSG370 Trans.
				DDD=5-Speed HD Man. Trans.
				DDK=5-Speed HD Man. Trans.

Brake Lines,Front,LHD
Figure 005-510

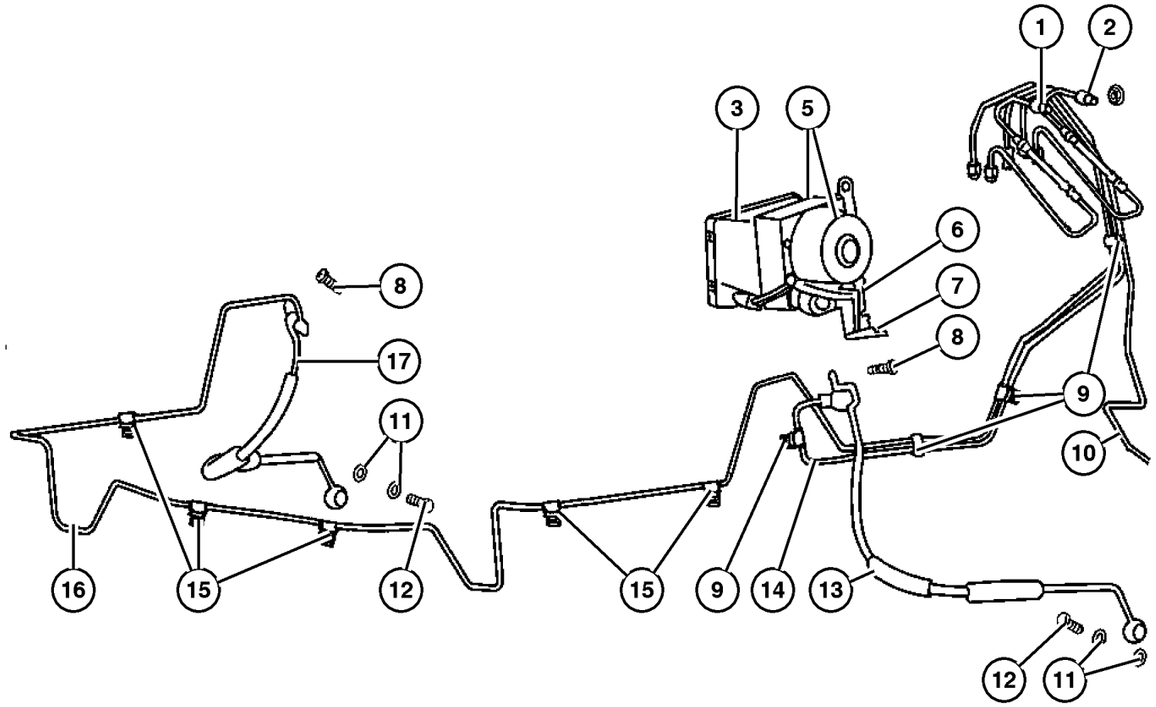

ITEM	PART NUMBER	QTY	LINE	SERIES	BODY	ENGINE	TRANS	TRIM	DESCRIPTION
Note: Sales Codes:									
[EK0]=Engines - All 3.7L 6 Cylinder Gas									
[EN0]=Engines - All 4/5 Cylinder Turbo Diesel									
1	52129 304AA	1	J, T						TUBE, Brake, Master Cylinder to HCU, Primary
2	52129 305AA	1	J, T						TUBE, Brake, Master Cylinder to HCU, Secondary
3	5179 773AA	1							MODULE, Anti-lock Brakes
-4	5159 024AA-	1							O RING, Mounts Item 3 to Item 5
5	5179 771AA	1							CONTROL UNIT, Anti-Lock Brake
6	5179 772AA	1							BRACKET, Hydraulic Control Unit
7	6100 048	2							NUT, Hex, M6x1.00, ABS Module Retention, Mounting
8	6505 446AA	2							SCREW, Brake Hose to Wheel House, Mounting
9	4582 074	3							CLIP, Fuel Bundle, 2 Way
10									BUNDLE, fuel and brake lines
	52129 255AB	1							[EK0] HCU to Rear Brake Hose, Chassis
	52129 326AB	1							[EN0] HCU to Rear Brake Hose, Chassis
11	J323 7672	4							GASKET, Brake Hose To Caliper, Mounting
12	6035 832	2							BOLT, Banjo, To Caliper, Mounting
13	52128 311AA	1							HOSE, Brake, Left
14	52129 401AA	1							TUBE, Brake, HCU to Brake Hose, Left
15	52128 409AA	5							CLIP, Brake Line, 1 Way, Mounting
16	52128 934AD	1							TUBE, Brake, HCU to Brake Hose, Right
17	52128 312AA	1							HOSE, Brake, Right

2006 Liberty (KJ)

SERIES	LINE	BODY	ENGINE	TRANSMISSION
H =HIGHLINE	T =JEEP - 2WD	74 =SPORT UTILITY 4-DR	EKG=3.7L V6 Eng.	DG6=4-Spd. Auto. 42RLE Trans.
M =MEDIUM	J =JEEP - 4WD		ENR=2.8L 4 Cyl Turbo Diesel Eng.	DGV=4-Spd. Auto. VLP Trans.
P =PREMIUM	U =JEEP - 4WD (RHD)		ENJ=2.5L 4 Cyl 16V Turbo Diesel Eng.	DGQ=5-Spd Auto. 5-45RFE Trans.
			ED1=2.4L 4 Cyl DOHC 16v SMPI Eng.	DEH=6-Speed Man. NSG370 Trans.
				DDD=5-Speed HD Man. Trans.
				DDK=5-Speed HD Man. Trans.

Brake Lines,Front,RHD
Figure 005-520

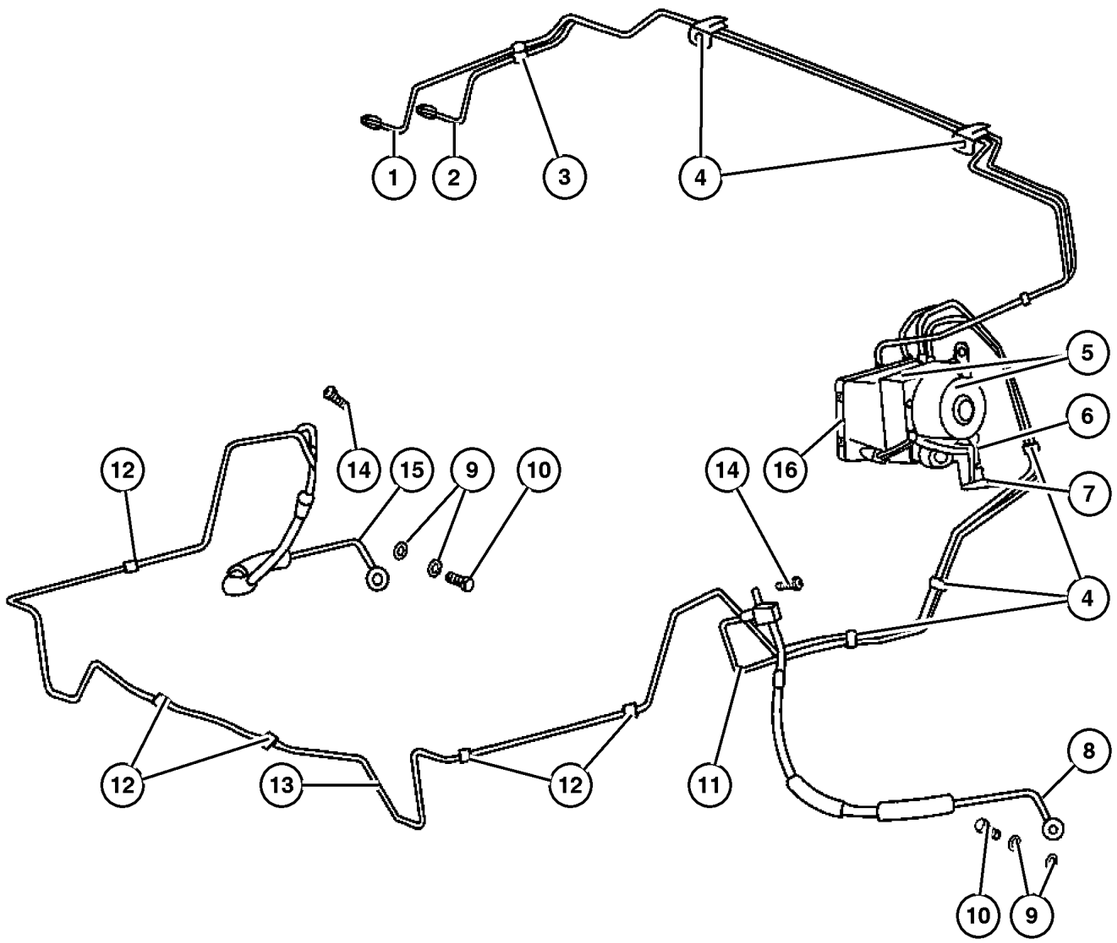

ITEM	PART NUMBER	QTY	LINE	SERIES	BODY	ENGINE	TRANS	TRIM	DESCRIPTION
Note: Sales Codes;									
[EK0]=Engines - All 3.7L 6 Cylinder Gas									
[EN0]=Engines - All 4/5 Cylinder Turbo Diesel									
1	52129 366AA	1	U						TUBE, Brake, Master Cylinder to HCU, Secondary
2	52129 361AA	1	U						TUBE, Brake, Master Cylinder to HCU, Primary
3	5183 887AA	1	U						BUMPER, Rubber
4	52128 405AB	2	U						CLIP, Brake Line, 4-Way to Plenum, Mounting
5	5179 771AA	1							CONTROL UNIT, Anti-Lock Brake
6	5179 772AA	1							BRACKET, Hydraulic Control Unit
7	6100 048	2							NUT, Hex, M6x1.00, ABS Module Retention, Mounting
8	52128 311AA	1							HOSE, Brake, Left
9	J323 7672	4							GASKET, Brake Hose To Caliper
10	6035 832	2							BOLT, Banjo, To Caliper, Mounting
11	52129 401AA	1							TUBE, Brake, HCU to Brake Hose, Left
12	52128 409AA	5							CLIP, Brake Line, 1-Way, Mounting
13	52128 934AD	1							TUBE, Brake, HCU to Brake Hose, Right
14	6505 446AA	2							SCREW, Brake Hose to Wheel House, Mounting
15	52128 312AA	1							HOSE, Brake, Right
16	5179 773AA	1							MODULE, Anti-lock Brakes
-17									BUNDLE, fuel and brake lines
	52129 255AC-	1							[EK0]
	52129 326AC-	1							[EN0]

2006 Liberty (KJ)

SERIES	LINE	BODY	ENGINE	TRANSMISSION
H =HIGHLINE	T =JEEP - 2WD	74 =SPORT UTILITY 4-DR	EKG=3.7L V6 Eng.	DG6=4-Spd. Auto. 42RLE Trans.
M =MEDIUM	J =JEEP - 4WD		ENR=2.8L 4 Cyl Turbo Diesel Eng.	DGV=4-Spd. Auto. VLP Trans.
P =PREMIUM	U =JEEP - 4WD (RHD)		ENJ=2.5L 4 Cyl 16V Turbo Diesel Eng.	DGQ=5-Spd Auto. 5-45RFE Trans.
			ED1=2.4L 4 Cyl DOHC 16v SMPI Eng.	DEH=6-Speed Man. NSG370 Trans.
				DDD=5-Speed HD Man. Trans.
				DDK=5-Speed HD Man. Trans.

Brake Lines,Rear
Figure 005-530

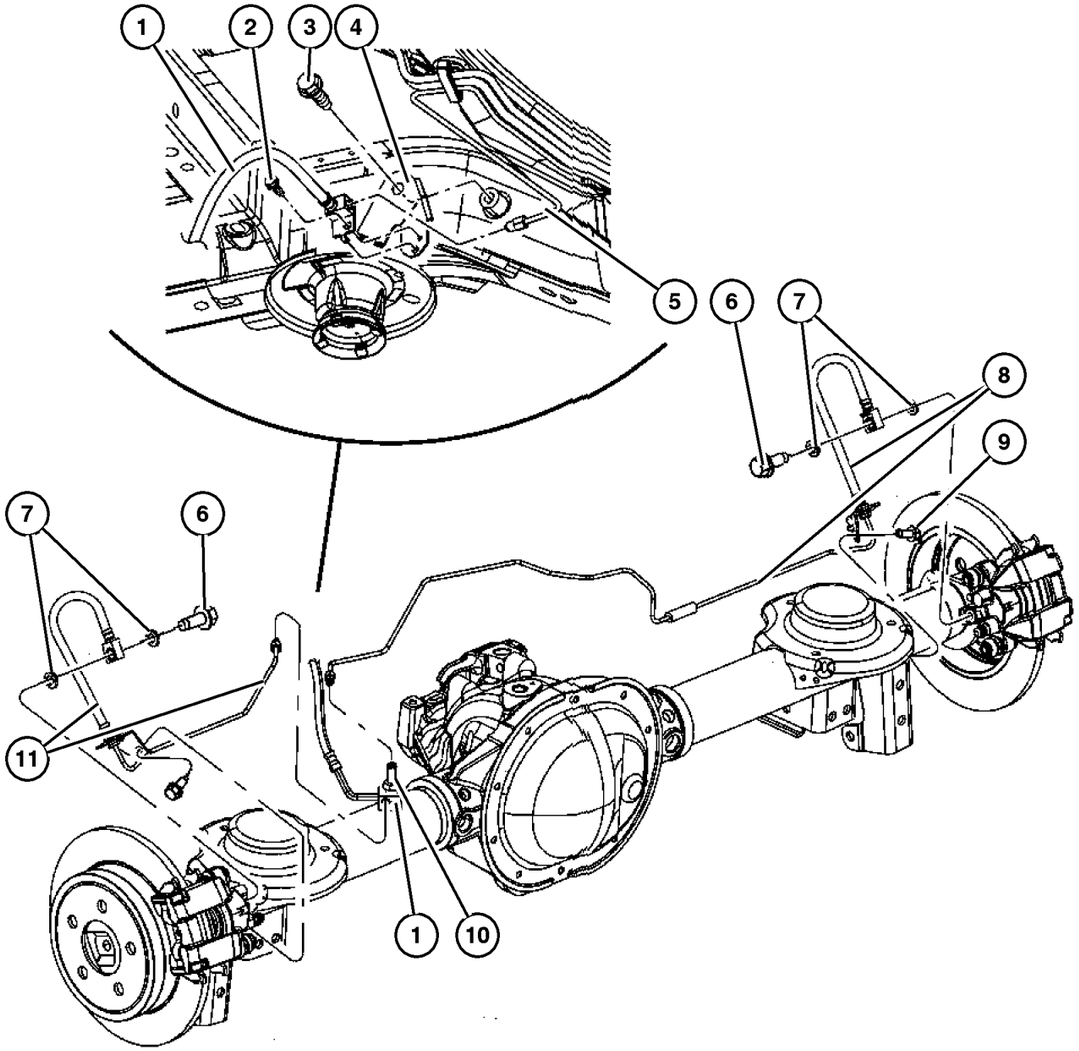

ITEM	PART NUMBER	QTY	LINE	SERIES	BODY	ENGINE	TRANS	TRIM	DESCRIPTION
Note: Sales Codes;									
[EK0]=All 3.7L 6-Cylinder Gas Engines									
[EN0]=Engines - All 4/5 Cylinder Turbo Diesel									
1	52129 260AA	1							HOSE, Brake
2	6503 343	1							SCREW, Brake Hose to Brake Hose Bracket, Mounting
3	6508 267AA	1							BOLT, [EN0] Brake Hose Bracket to Left Rail, Mounting
4	52128 480AC	1							BRACKET, Brake Hose, [EN0]
5									BUNDLE, fuel and brake lines
	52129 255AC	1							[EK0], Chassis
	52129 326AC	1							[EN0], Chassis
6	6035 832	2							BOLT, Banjo, To Caliper, Mounting
7	J323 7672	4							GASKET, Brake Hose To Caliper, Mounting
8	52128 514AD	1							HOSE, Brake, Right
9									SCREW, Hex Flange Head, M6x1. 00x15.00, Brake Hose Bracket to Spring Seat, (NOT SERVICED) (Not Serviced)
10	4137 696AB	1							BOLT, Axle Vent
11	52129 261AB	1							HOSE, Brake, Left

2006 Liberty (KJ)

SERIES	LINE	BODY	ENGINE	TRANSMISSION
H =HIGHLINE	T =JEEP - 2WD	74 =SPORT UTILITY 4-DR	EKG=3.7L V6 Eng.	DG6=4-Spd. Auto. 42RLE Trans.
M =MEDIUM	J =JEEP - 4WD		ENR=2.8L 4 Cyl Turbo Diesel Eng.	DGV=4-Spd. Auto. VLP Trans.
P =PREMIUM	U =JEEP - 4WD (RHD)		ENJ=2.5L 4 Cyl 16V Turbo Diesel Eng.	DGQ=5-Spd Auto. 5-45RFE Trans.
			ED1=2.4L 4 Cyl DOHC 16v SMPI Eng.	DEH=6-Speed Man. NSG370 Trans.
				DDD=5-Speed HD Man. Trans.
				DDK=5-Speed HD Man. Trans.

Pedals,Brake and Clutch
Figure 005-610

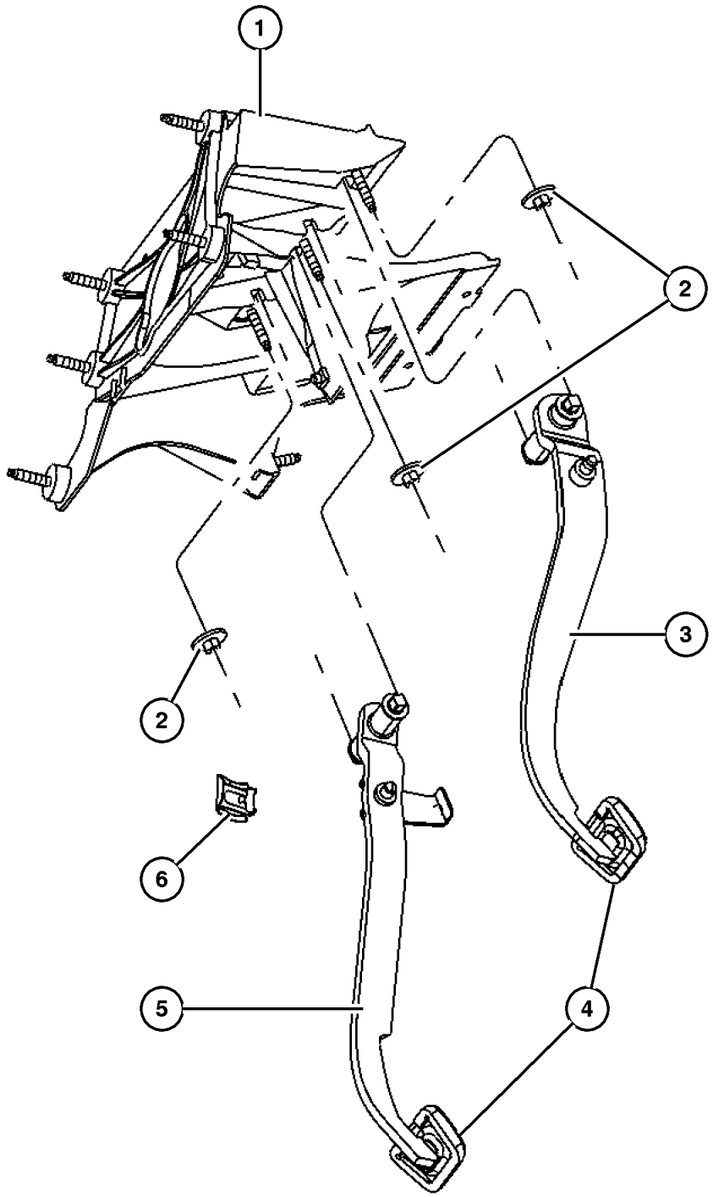

ITEM	PART NUMBER	QTY	LINE	SERIES	BODY	ENGINE	TRANS	TRIM	DESCRIPTION
Note:Sales Codes;									
DBB=Transmissions - All Manual									
DG0=Transmissions - All Automatic									
1									BRACKET, Steering Column
	55314 992AB	1	J, T						
	55315 011AB	1	U						
2	6506 232AA	2							NUT, Pedal to Steering Column Bracket, Mounting
3									PEDAL, Clutch
	52128 957AA	1	J, T						[DBB] Includes Items 4,7
	52128 958AA	1	U						[DBB] Includes Items 4,7
4									PAD, Pedal
	5200 9562	1	J, T						[DBB]
		1	U						[DBB]
	4779 027	1	J, T						[DG0]
		1	U						[DG0]
5									PEDAL, Brake
	52128 347AD	1	J, T						[DBB] Includes Items 4,7
	52128 348AC	1	U						[DBB] Includes Items 4,7
	52128 346AD	1	J, T						[DG0] Includes Items 4,7
	52128 345AC	1	U						[DG0] Includes Items 4,7
6	6035 334	1							CLIP, Brake Push Rod, Mounting
-7									TAPE, Anti-Squeak
	5019 054AA-	1	J, T						
		1	U						

2006 Liberty (KJ)

SERIES	LINE	BODY	ENGINE	TRANSMISSION
H =HIGHLINE	T =JEEP - 2WD	74 =SPORT UTILITY 4-DR	EKG=3.7L V6 Eng.	DG6=4-Spd. Auto. 42RLE Trans.
M =MEDIUM	J =JEEP - 4WD		ENR=2.8L 4 Cyl Turbo Diesel Eng.	DGV=4-Spd. Auto. VLP Trans.
P =PREMIUM	U =JEEP - 4WD (RHD)		ENJ=2.5L 4 Cyl 16V Turbo Diesel Eng.	DGQ=5-Spd Auto. 5-45RFE Trans.
			ED1=2.4L 4 Cyl DOHC 16v SMPI Eng.	DEH=6-Speed Man. NSG370 Trans.
				DDD=5-Speed HD Man. Trans.
				DDK=5-Speed HD Man. Trans.

Group – 007
Cooling

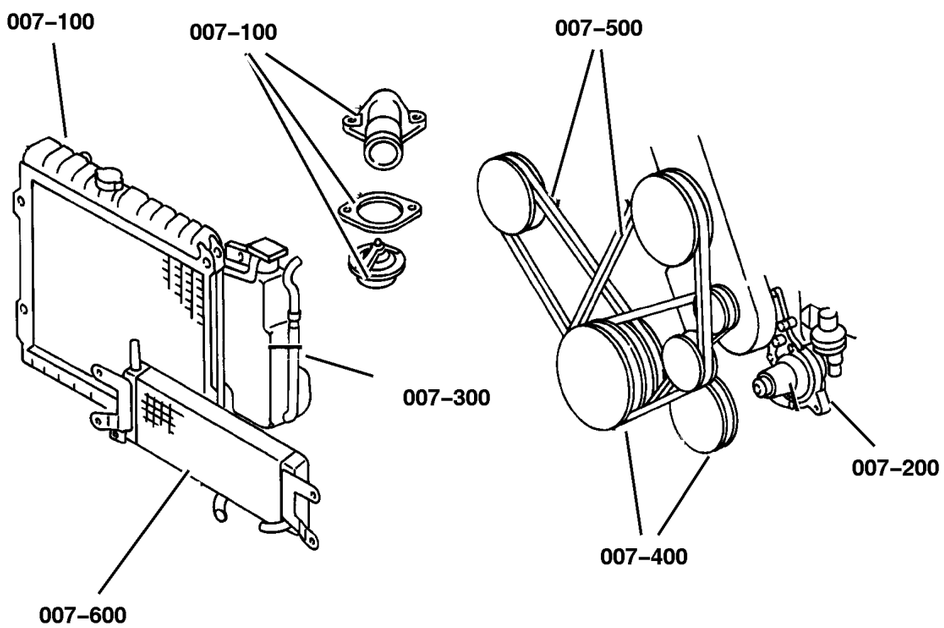

007–100 Radiator and Related Parts 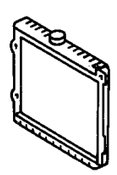	**007–200** Water Pump and Related Parts 	**007–300** Tank, Coolant Engine 	**007–400** Pulleys and Related Parts 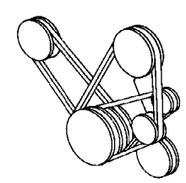
007–500 Drive Belts 	**007–600** Lines, Transmission Oil Cooler 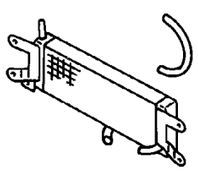	**007–700** Grilles 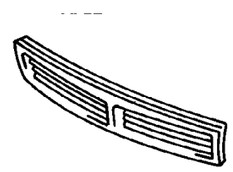	

GROUP 7 - Cooling

Illustration Title — Group-Fig. No.

Radiator and Related Parts
Radiator and Related Parts, 3.7L Engine . . . . . Fig. 007-120
Radiator and Related Parts, 2.8L Diesel Engine . . . . . Fig. 007-130
Support Assy. - Radiator . . . . . Fig. 007-140

Water Pump and Related Parts
Water Pump and Related Parts, 3.7L Engine . . . . . Fig. 007-220
Water Pump and Related Parts, 2.8L Diesel Engine . . . . . Fig. 007-230

Tank, Coolant Engine
Coolant Tank, 3.7L Engine . . . . . Fig. 007-310
Coolant Degasser Tank, 2.8L Diesel Engine . . . . . Fig. 007-320

Pulleys and Related Parts
Drive Pulleys, 3.7L Engine . . . . . Fig. 007-420
Drive Pulleys, 2.8L Diesel Engine . . . . . Fig. 007-430

Drive Belts
Drive Belts, 3.7L Engine . . . . . Fig. 007-520
Drive Belts, 2.8L Diesel Engine . . . . . Fig. 007-530

Lines, Transmission Oil Cooler
Oil Cooler Lines . . . . . Fig. 007-610

Grilles
Grille and Related Parts . . . . . Fig. 007-710

Radiator and Related Parts, 3.7L Engine
Figure 007-120

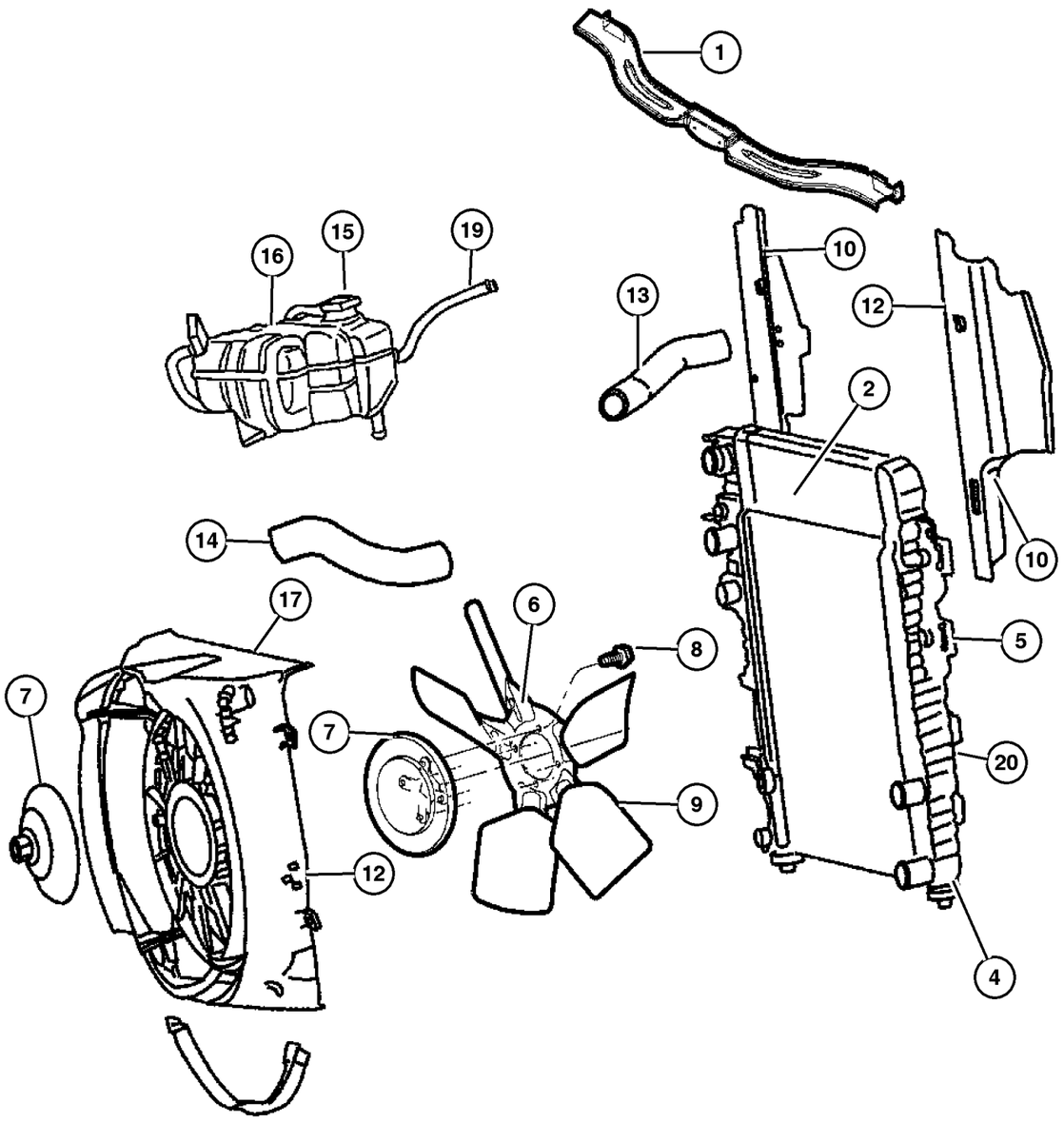

ITEM	PART NUMBER	QTY	LINE	SERIES	BODY	ENGINE	TRANS	TRIM	DESCRIPTION
Note; Sales Codes									
[DBB] = ALL MANUAL TRANSMISSIONS									
[DGO] = ALL AUTOMATIC TRANSMISSIONS									
[EK0] = ALL 3.7L 6 CYLINDER GAS ENGINES									
1	55176 763AF	1							CROSSMEMBER, Radiator
2									RADIATOR, Engine Cooling
	52080 120AE	1				EK0	DG0		
		1				EK0	DBB		
-3	55176 756AE-	1							SUPPORT, Radiator, Lower
4									ISOLATOR, Radiator
	52079 651AA	2				EK0	DG0		
		2				EK0	DBB		
5	5143 010AB	1				EN0	DBB		CONDENSER, Air Conditioning
6									FAN, Cooling, Electric
	55037 691AA	1				EK0	DG0		
		1				EK0	DBB		
7	52079 718AD	1				EK0			DRIVE, Fan, Viscous
8	6034 860	4				EK0			BOLT AND WASHER, Implement Attaching
9	52079 654AD	1				EK0			FAN, Cooling, Mechanical
10									SEAL, Radiator Side Air
	5143 008AA	1				EK0	DG0		
		1				EK0	DBB		
-11	6036 155AA-	6							PIN, Push
12	5143 008AA	1				EK0	DG0		SEAL, Radiator Side Air
13	55037 903AA	1				EK0			HOSE, Radiator Inlet
14	55037 921AE	1				EN0			HOSE, Radiator Outlet
15	4596 198	1				EK0			CAP, Radiator
16	52079 788AE	1				EK0			BOTTLE, Pressurized Coolant
17									SHROUD, Fan
	52080 127AA	1				EK0	DG0		Radiator
		1				EK0	DBB		Radiator
	55037 692AB	1				EK0	DG0		
		1				EK0	DBB		
-18	53020 887AC-	1				EK0			HOUSING, Thermostat
19	55037 642AB	1				EK0			CLIP, Hose
20									COOLER, Oil
	5142 820AA	1				EN0	DG0		
	5143 014AA	1				EK0	DG0		

2006 Liberty (KJ)

SERIES	LINE	BODY	ENGINE	TRANSMISSION
H =HIGHLINE	T =JEEP - 2WD	74 =SPORT UTILITY 4-DR	EKG=3.7L V6 Eng.	DG6=4-Spd. Auto. 42RLE Trans.
M =MEDIUM	J =JEEP - 4WD		ENR=2.8L 4 Cyl Turbo Diesel Eng.	DGV=4-Spd. Auto. VLP Trans.
P =PREMIUM	U =JEEP - 4WD (RHD)		ENJ=2.5L 4 Cyl 16V Turbo Diesel Eng.	DGQ=5-Spd Auto. 5-45RFE Trans.
			ED1=2.4L 4 Cyl DOHC 16v SMPI Eng.	DEH=6-Speed Man. NSG370 Trans.
				DDD=5-Speed HD Man. Trans.
				DDK=5-Speed HD Man. Trans.

Radiator and Related Parts, 2.8L Diesel Engine
Figure 007-130

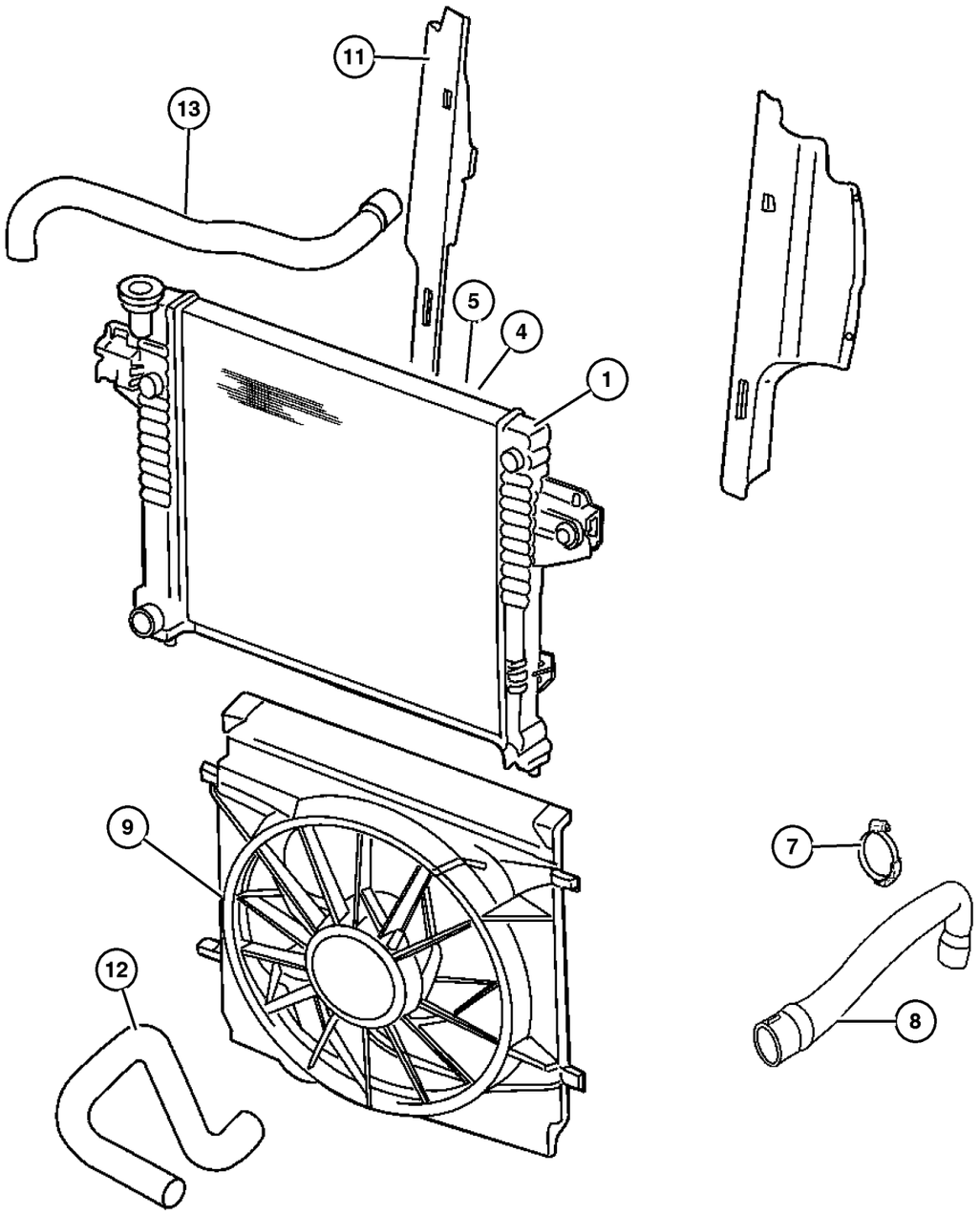

ITEM	PART NUMBER	QTY	LINE	SERIES	BODY	ENGINE	TRANS	TRIM	DESCRIPTION
Note; Sales Codes									
[DBB] = ALL MANUAL TRANSMISSIONS									
[DG0] = ALL AUTOMATIC TRANSMISSIONS									
[EN0] = ALL 4/5 CYLINDER TURBO DIESEL ENGINES									
1	5174 154AA	1				EN0	DBB		RADIATOR, Engine Cooling
-2	55176 756AE-	1							SUPPORT, Radiator
-3	55176 763AF-	1							CROSSMEMBER, Radiator
4	5183 560AA	1				EN0	DBB		CONDENSER, Air Conditioning
5	5183 561AA	1				EN0	DG0		COOLER, Condenser and Aux TOC
-6	5143 020AA-	1				EN0	DBB		COOLER, Charge Air
7	6105 105AA	1				EN0			CLAMP, HOSE CLAMP
8									HOSE, Charge Air Cooler
	55037 729AC	1				EN0			Inlet
	55037 730AC	1				EN0			Outlet
9	5143 022AA	1				EN0	DBB		SHROUD, Fan
-10	52079 879AB-	1				EN0			SHROUD, Fan, Door
11	5143 024AA	1				EN0	DBB		SEAL, Radiator Side Air
12	55037 921AE	1				EN0			HOSE, Radiator Outlet
13	55037 920AB	1				EN0			HOSE, Radiator Inlet
-14	52079 727AA-	1				EN0			FAN, Cooling
-15	55037 733AD-	1				EN0			DRIVE, Fan, Viscous

2006 Liberty (KJ)

SERIES	LINE	BODY	ENGINE	TRANSMISSION
H =HIGHLINE	T =JEEP - 2WD	74 =SPORT UTILITY 4-DR	EKG=3.7L V6 Eng.	DG6=4-Spd. Auto. 42RLE Trans.
M =MEDIUM	J =JEEP - 4WD		ENR=2.8L 4 Cyl Turbo Diesel Eng.	DGV=4-Spd. Auto. VLP Trans.
P =PREMIUM	U =JEEP - 4WD (RHD)		ENJ=2.5L 4 Cyl 16V Turbo Diesel Eng.	DGQ=5-Spd Auto. 5-45RFE Trans.
			ED1=2.4L 4 Cyl DOHC 16v SMPI Eng.	DEH=6-Speed Man. NSG370 Trans.
				DDD=5-Speed HD Man. Trans.
				DDK=5-Speed HD Man. Trans.

Support Assy. - Radiator
Figure 007-140

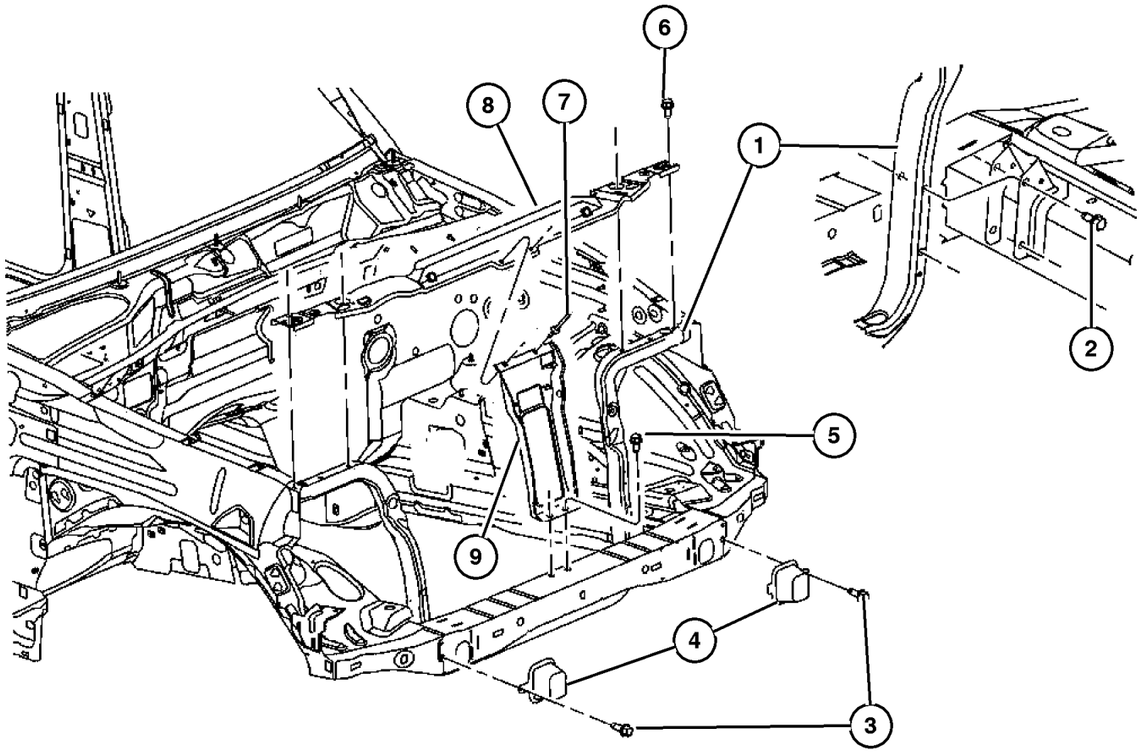

ITEM	PART NUMBER	QTY	LINE	SERIES	BODY	ENGINE	TRANS	TRIM	DESCRIPTION
1	55176 756AE	1							SUPPORT, Radiator
2	6102 142AA	6							SCREW, Hex Head, M6x1x15
3	6505 903AA	2							SCREW AND WASHER, Self Tapping, M6x1x22, Crush Can
4	55360 410AA	2							SPACER, Jounce Bumper
5	6505 903AA	2							SCREW AND WASHER, Self Tapping, M6x1x22, Hood Latch Support Attach Lower Crossmember
6	6505 903AA	4							SCREW AND WASHER, Self Tapping, M6x1x22, Upper Attach Hydroform
7	6036 456AA	2							RIVET
8	55360 190AH	1							CROSSMEMBER, Front Support
9	55360 694AB	1							REINFORCEMENT, Hood Latch

2006 Liberty (KJ)

SERIES	LINE	BODY	ENGINE	TRANSMISSION
H =HIGHLINE	T =JEEP - 2WD	74 =SPORT UTILITY 4-DR	EKG=3.7L V6 Eng.	DG6=4-Spd. Auto. 42RLE Trans.
M =MEDIUM	J =JEEP - 4WD		ENR=2.8L 4 Cyl Turbo Diesel Eng.	DGV=4-Spd. Auto. VLP Trans.
P =PREMIUM	U =JEEP - 4WD (RHD)		ENJ=2.5L 4 Cyl 16V Turbo Diesel Eng.	DGQ=5-Spd Auto. 5-45RFE Trans.
			ED1=2.4L 4 Cyl DOHC 16v SMPI Eng.	DEH=6-Speed Man. NSG370 Trans.
				DDD=5-Speed HD Man. Trans.
				DDK=5-Speed HD Man. Trans.

Water Pump and Related Parts, 3.7L Engine
Figure 007-220

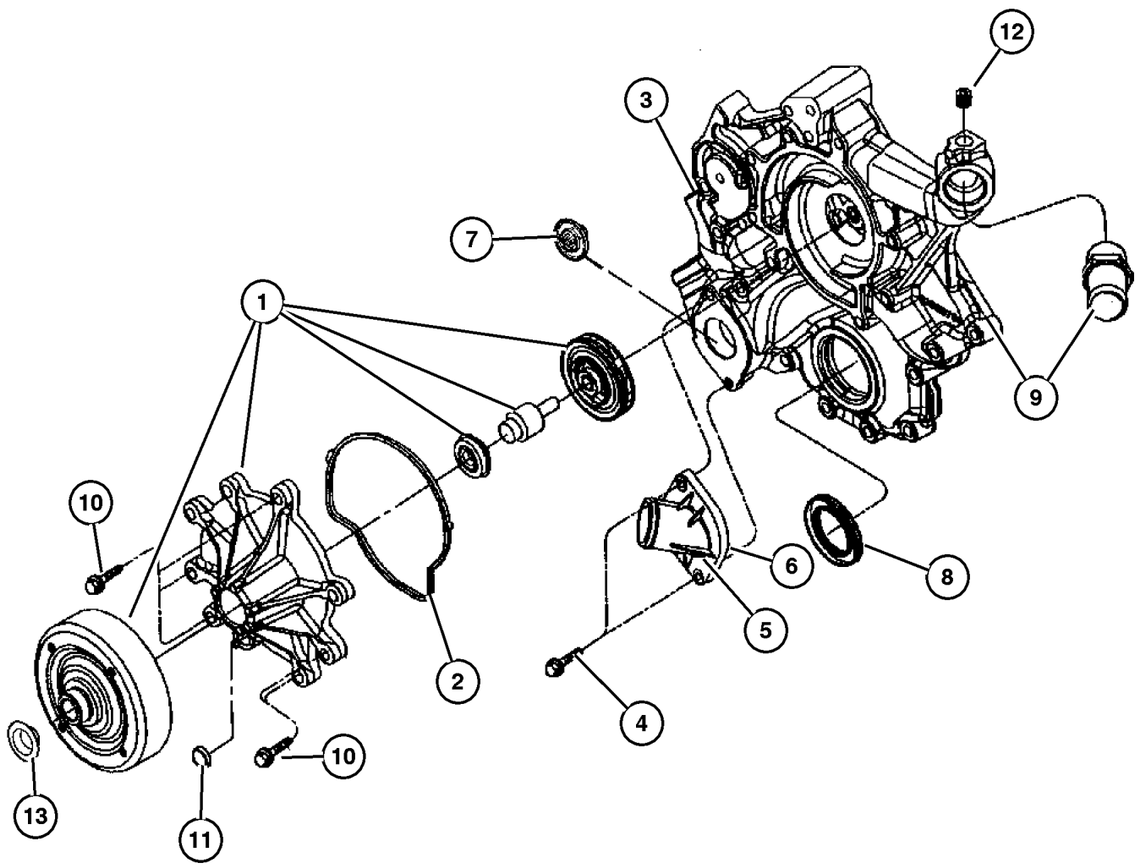

ITEM	PART NUMBER	QTY	LINE	SERIES	BODY	ENGINE	TRANS	TRIM	DESCRIPTION
Note; Sales Codes									
[DGO] = ALL AUTOMATIC TRANSMISSIONS									
[EK0] = ALL 3.7L 6-CYL GAS ENGINES									
1	53022 189AA	1				EK0			PUMP, Water
2	5302 0865	1				EK0			GASKET, Water Pump
3	6035 854	2				EK0			NIPPLE
4	6505 502AA	2				EK0			SCREW
5	53020 887AC	1				EK0			HOUSING, Thermostat
6									GASKET, Thermostat, Use RTV Sealer, (NOT SERVICED) (Not Serviced)
7	52079 476AC	1				EK0			THERMOSTAT
8	53021 313AA	1				EK0			SEAL, Crankshaft Oil, Front
9	5066 955AA	1				EN0	DG0		COVER, Timing Belt
10	6102 380AA	5				EK0			SCREW, Hex Flange Head
11									PLUG, (NOT SERVICED) (Not Serviced)
12									PLUG, (NOT SERVICED) (Not Serviced)
13	53013 505AA	1				EK0			CAP, Water Pump Pulley

2006 Liberty (KJ)

SERIES	LINE	BODY	ENGINE	TRANSMISSION
H =HIGHLINE	T =JEEP - 2WD	74 =SPORT UTILITY 4-DR	EKG=3.7L V6 Eng.	DG6=4-Spd. Auto. 42RLE Trans.
M =MEDIUM	J =JEEP - 4WD		ENR=2.8L 4 Cyl Turbo Diesel Eng.	DGV=4-Spd. Auto. VLP Trans.
P =PREMIUM	U =JEEP - 4WD (RHD)		ENJ=2.5L 4 Cyl 16V Turbo Diesel Eng.	DGQ=5-Spd Auto. 5-45RFE Trans.
			ED1=2.4L 4 Cyl DOHC 16v SMPI Eng.	DEH=6-Speed Man. NSG370 Trans.
				DDD=5-Speed HD Man. Trans.
				DDK=5-Speed HD Man. Trans.

Water Pump and Related Parts, 2.8L Diesel Engine
Figure 007-230

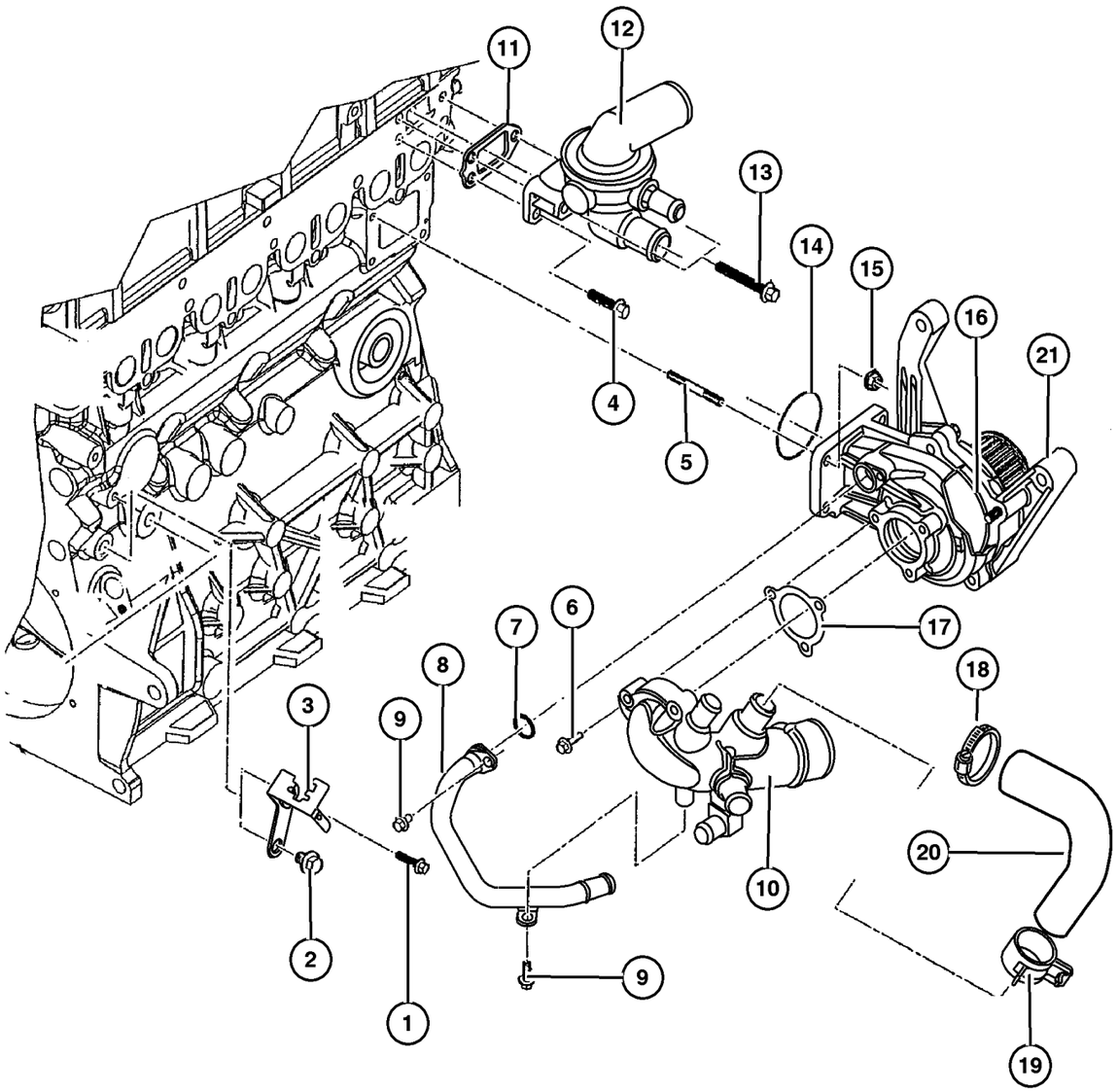

ITEM	PART NUMBER	QTY	LINE	SERIES	BODY	ENGINE	TRANS	TRIM	DESCRIPTION
NOTES; Sales Codes:									
[DBB] = ALL MANUAL TRANSMISSIONS									
[DG0] = ALL AUTOMATIC TRANSMISSIONS									
[EN0] = ALL 4/5 CYLINDER TURBO DIESEL ENGINES									
1	6101 983	4				EN0	DBB		SCREW
2	5003 557AA	2				EN0	DG0		SCREW
3									BRACKET, (NOT REQUIRED)
4	5066 986AA	1				EN0	DBB		SCREW
5	4720 550	1				EN0	DBB		STUD, Water Pump To Block
6	4882 620	4				EN0	DBB		SCREW
7									WASHER, Implement Attaching
	4723 204	8				EN0	DG0		
		8				EN0	DBB		
8	5072 703AB	1				EN0	DBB		PIPE, Water Pump Drain
9	5003 551AA	1				EN0	DBB		BOLT, M6x10
10	5096 235AA	1				EN0	DG0		ADAPTER, Water Pump
11	5066 806AA	1				EN0	DG0		GASKET, Thermostat
12	5142 601AA	1				EN0	DG0		THERMOSTAT
13	5066 962AA	1				EN0	DBB		SCREW
14	5159 019AA	1				EN0	DG0		O RING, Water Pump
15	4778 961	7				EN0	DG0		NUT
16	5072 707AA	1				EN0	DG0		O RING
17	4864 575	1				EN0	DG0		GASKET, Water Pump
18	6104 795AA	1				EN0			CLAMP, Hose
19	4886 050AA	1				EN0	DG0		CLAMP, Heater Hose
20	5142 788AA	1				EN0	DG0		HOSE, Coolant
21	5142 985AA	1				EN0	DG0		PUMP, Water

2006 Liberty (KJ)

SERIES	LINE	BODY	ENGINE	TRANSMISSION
H =HIGHLINE	T =JEEP - 2WD	74 =SPORT UTILITY 4-DR	EKG=3.7L V6 Eng.	DG6=4-Spd. Auto. 42RLE Trans.
M =MEDIUM	J =JEEP - 4WD		ENR=2.8L 4 Cyl Turbo Diesel Eng.	DGV=4-Spd. Auto. VLP Trans.
P =PREMIUM	U =JEEP - 4WD (RHD)		ENJ=2.5L 4 Cyl 16V Turbo Diesel Eng.	DGQ=5-Spd Auto. 5-45RFE Trans.
			ED1=2.4L 4 Cyl DOHC 16v SMPI Eng.	DEH=6-Speed Man. NSG370 Trans.
				DDD=5-Speed HD Man. Trans.
				DDK=5-Speed HD Man. Trans.

Coolant Tank, 3.7L Engine
Figure 007-310

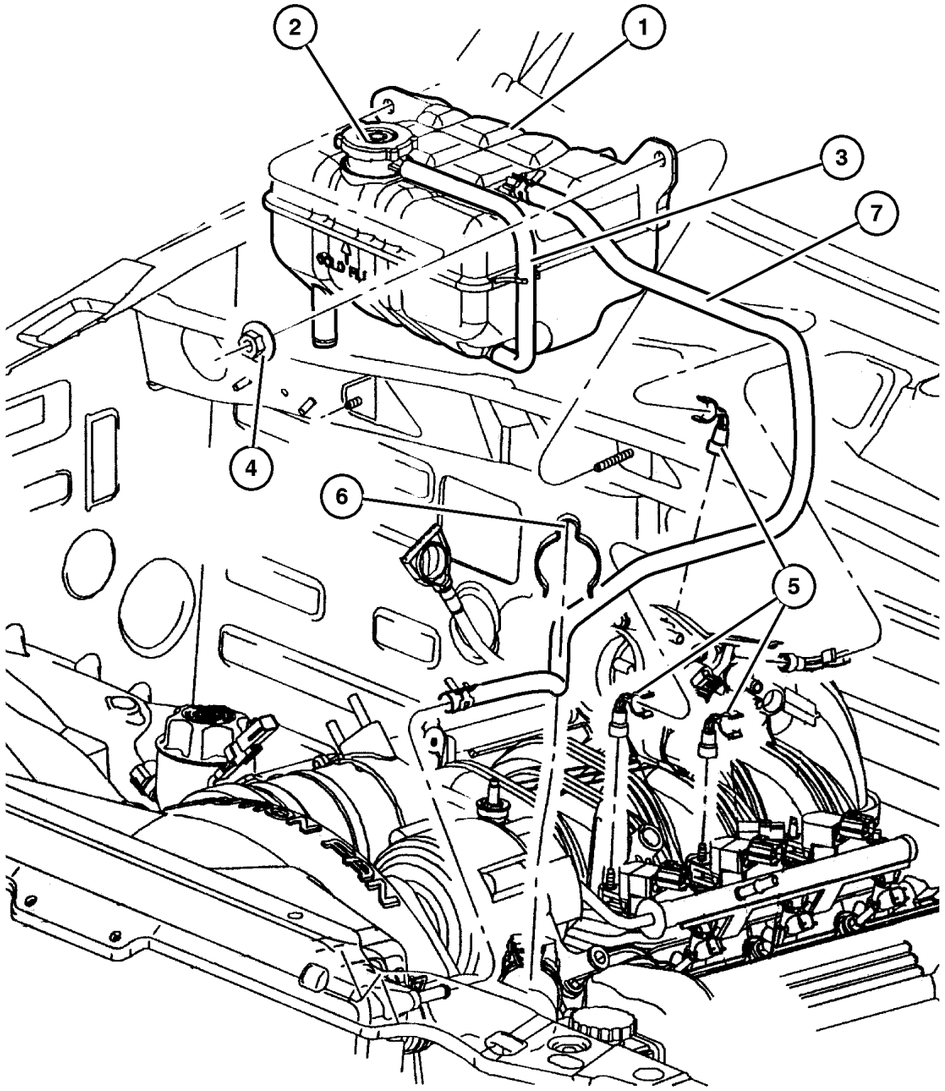

ITEM	PART NUMBER	QTY	LINE	SERIES	BODY	ENGINE	TRANS	TRIM	DESCRIPTION
Note; Sales Codes									
[EK0] = All 3.7L, 6 Cylinder Gas Engines									
1	52079 788AE	1				EK0			BOTTLE, Pressurized Coolant
2	4596 198	1				EK0			CAP, Radiator
3	55037 765AB	1				EN0			HOSE, Coolant
4	6506 603AA	2				ED0, EK0, EN0			NUT, M6x1.00
5	52128 508AC	3				EK0			CLIP, Hose
6									CLIP, Hose, 52007404, (NOT SERVICED) (Not Serviced)
7	5086 496AA	1				EK0			HOSE, Overflow, Roll Stock

2006 Liberty (KJ)

SERIES	LINE	BODY	ENGINE	TRANSMISSION
H =HIGHLINE	T =JEEP - 2WD	74 =SPORT UTILITY 4-DR	EKG=3.7L V6 Eng.	DG6=4-Spd. Auto. 42RLE Trans.
M =MEDIUM	J =JEEP - 4WD		ENR=2.8L 4 Cyl Turbo Diesel Eng.	DGV=4-Spd. Auto. VLP Trans.
P =PREMIUM	U =JEEP - 4WD (RHD)		ENJ=2.5L 4 Cyl 16V Turbo Diesel Eng.	DGQ=5-Spd Auto. 5-45RFE Trans.
			ED1=2.4L 4 Cyl DOHC 16v SMPI Eng.	DEH=6-Speed Man. NSG370 Trans.
				DDD=5-Speed HD Man. Trans.
				DDK=5-Speed HD Man. Trans.

Coolant Degasser Tank, 2.8L Diesel Engine
Figure 007-320

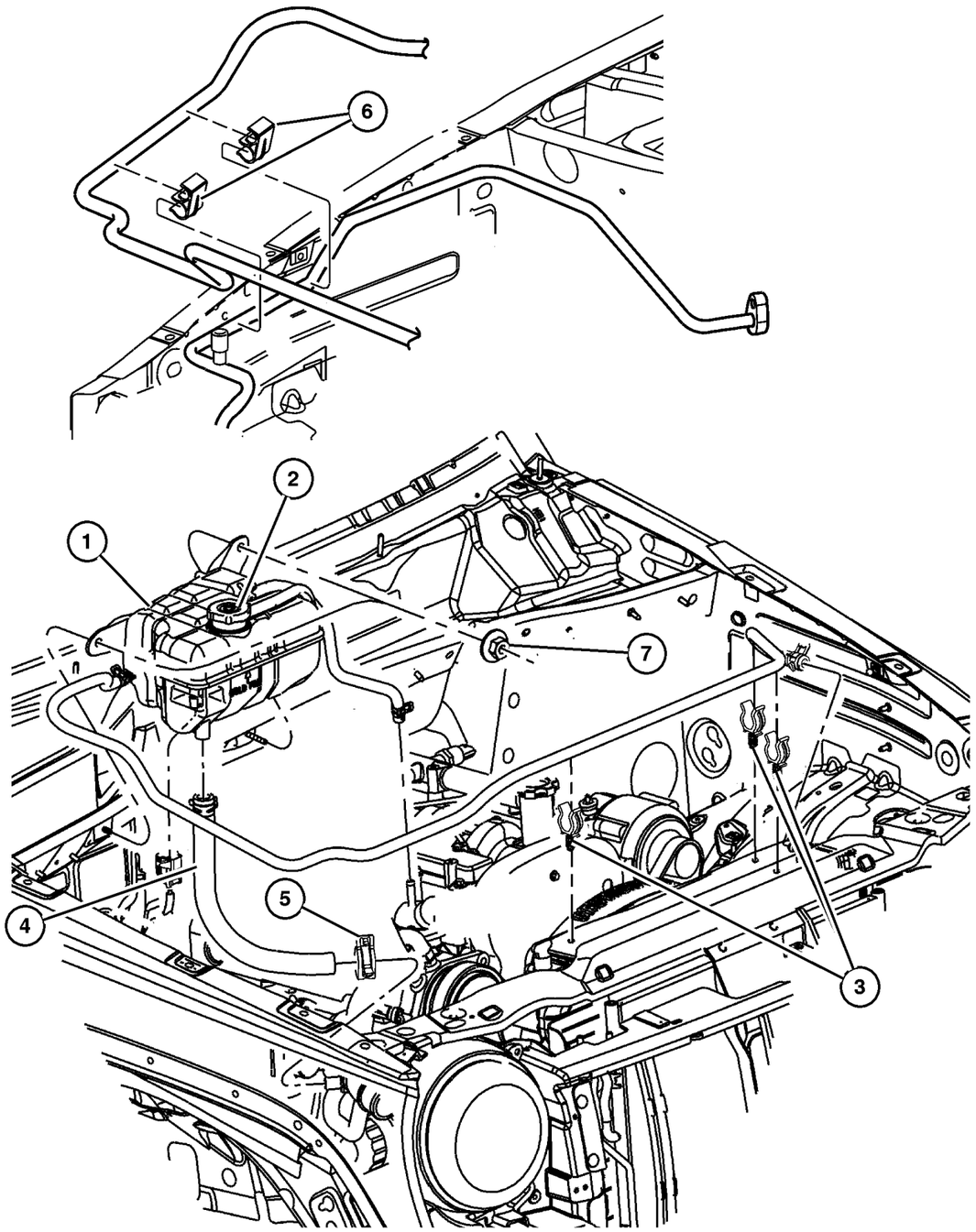

ITEM	PART NUMBER	QTY	LINE	SERIES	BODY	ENGINE	TRANS	TRIM	DESCRIPTION
NOTES: Sales Codes:									
[EN0] = ALL 4/5 CYLINDER TURBO DIESEL ENGINES									
1	55037 731AF	1				EN0			BOTTLE, Pressurized Coolant
2									CAP, Radiator, 04596198, (NOT SERVICED) (Not Serviced)
3	52080 133AB	2				EN0			CLIP, Hose
4	55037 765AB	1				EN0			HOSE, Coolant
5	6502 018	2				EN0			CLAMP, Hose, M28.9 x 1.60
6									CLIP, (NOT SERVICED) (Not Serviced)
7									NUT, M6X1.00, (NOT SERVICED) (Not Serviced)

2006 Liberty (KJ)

SERIES	LINE	BODY	ENGINE	TRANSMISSION
H =HIGHLINE	T =JEEP - 2WD	74 =SPORT UTILITY 4-DR	EKG=3.7L V6 Eng.	DG6=4-Spd. Auto. 42RLE Trans.
M =MEDIUM	J =JEEP - 4WD		ENR=2.8L 4 Cyl Turbo Diesel Eng.	DGV=4-Spd. Auto. VLP Trans.
P =PREMIUM	U =JEEP - 4WD (RHD)		ENJ=2.5L 4 Cyl 16V Turbo Diesel Eng.	DGQ=5-Spd Auto. 5-45RFE Trans.
			ED1=2.4L 4 Cyl DOHC 16v SMPI Eng.	DEH=6-Speed Man. NSG370 Trans.
				DDD=5-Speed HD Man. Trans.
				DDK=5-Speed HD Man. Trans.

Drive Pulleys, 3.7L Engine
Figure 007-420

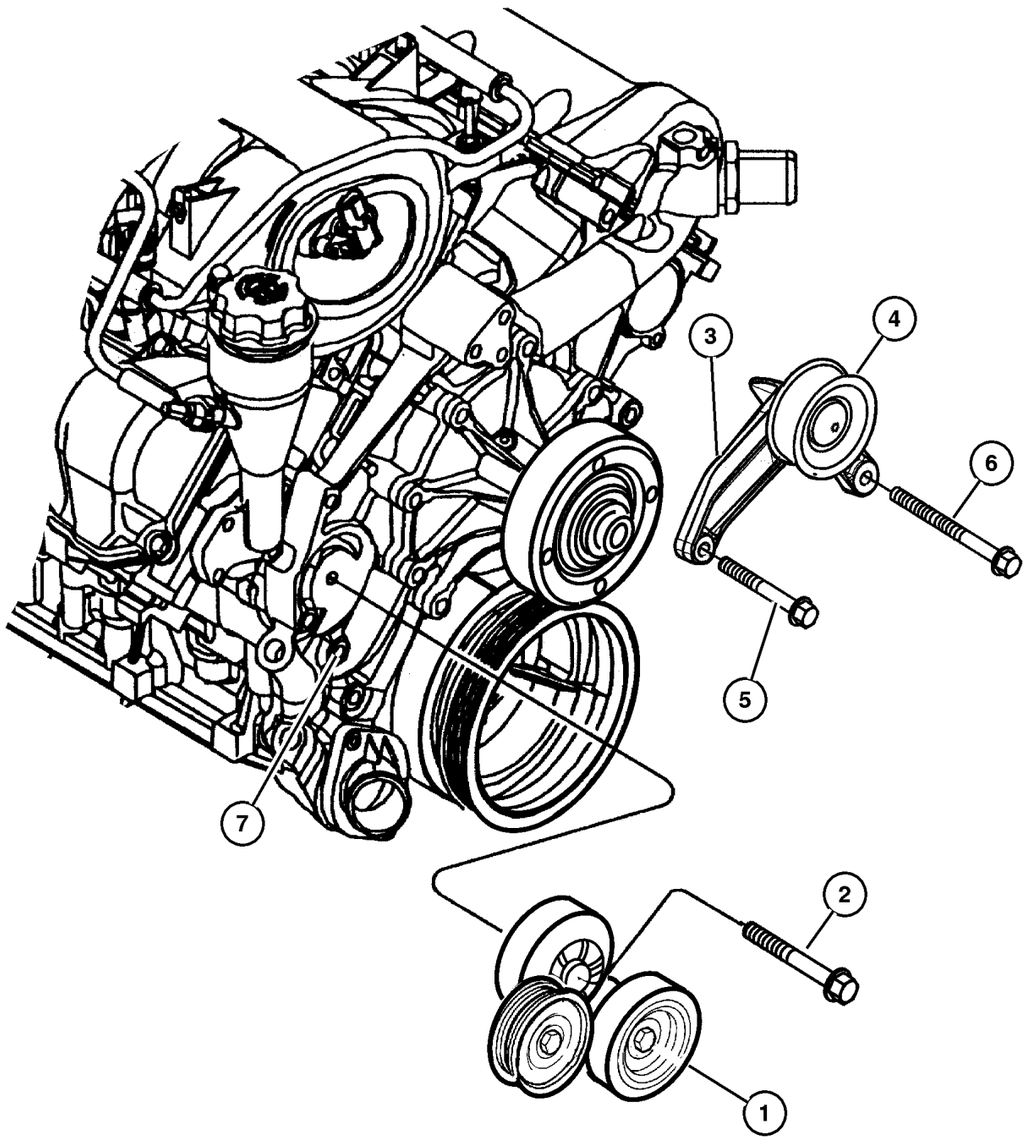

ITEM	PART NUMBER	QTY	LINE	SERIES	BODY	ENGINE	TRANS	TRIM	DESCRIPTION
Note; Sales Codes									
[EK0] = ALL 3.7L 6-CYL GAS ENGINES									
1	53030 958AD	1				EK0			TENSIONER, Alternator Belt
2	6504 930AA	1				EK0			SCREW AND WASHER, Hex Head, M10x1.5x70
3	5303 0959	1				EK0			BRACKET, Idler Pulley, [HC0]
4	5303 1045	1				EK0			PULLEY, Idler, [HC0]
5	6505 487AA	1				EK0			SCREW AND WASHER, M10x1.5x45
6	6504 344	1				EK0			SCREW AND WASHER, Hex Head
7	6507 856AA	1				EK0			SCREW AND WASHER

2006 Liberty (KJ)

SERIES	LINE	BODY	ENGINE	TRANSMISSION
H =HIGHLINE	T =JEEP - 2WD	74 =SPORT UTILITY 4-DR	EKG=3.7L V6 Eng.	DG6=4-Spd. Auto. 42RLE Trans.
M =MEDIUM	J =JEEP - 4WD		ENR=2.8L 4 Cyl Turbo Diesel Eng.	DGV=4-Spd. Auto. VLP Trans.
P =PREMIUM	U =JEEP - 4WD (RHD)		ENJ=2.5L 4 Cyl 16V Turbo Diesel Eng.	DGQ=5-Spd Auto. 5-45RFE Trans.
			ED1=2.4L 4 Cyl DOHC 16v SMPI Eng.	DEH=6-Speed Man. NSG370 Trans.
				DDD=5-Speed HD Man. Trans.
				DDK=5-Speed HD Man. Trans.

Drive Pulleys, 2.8L Diesel Engine
Figure 007-430

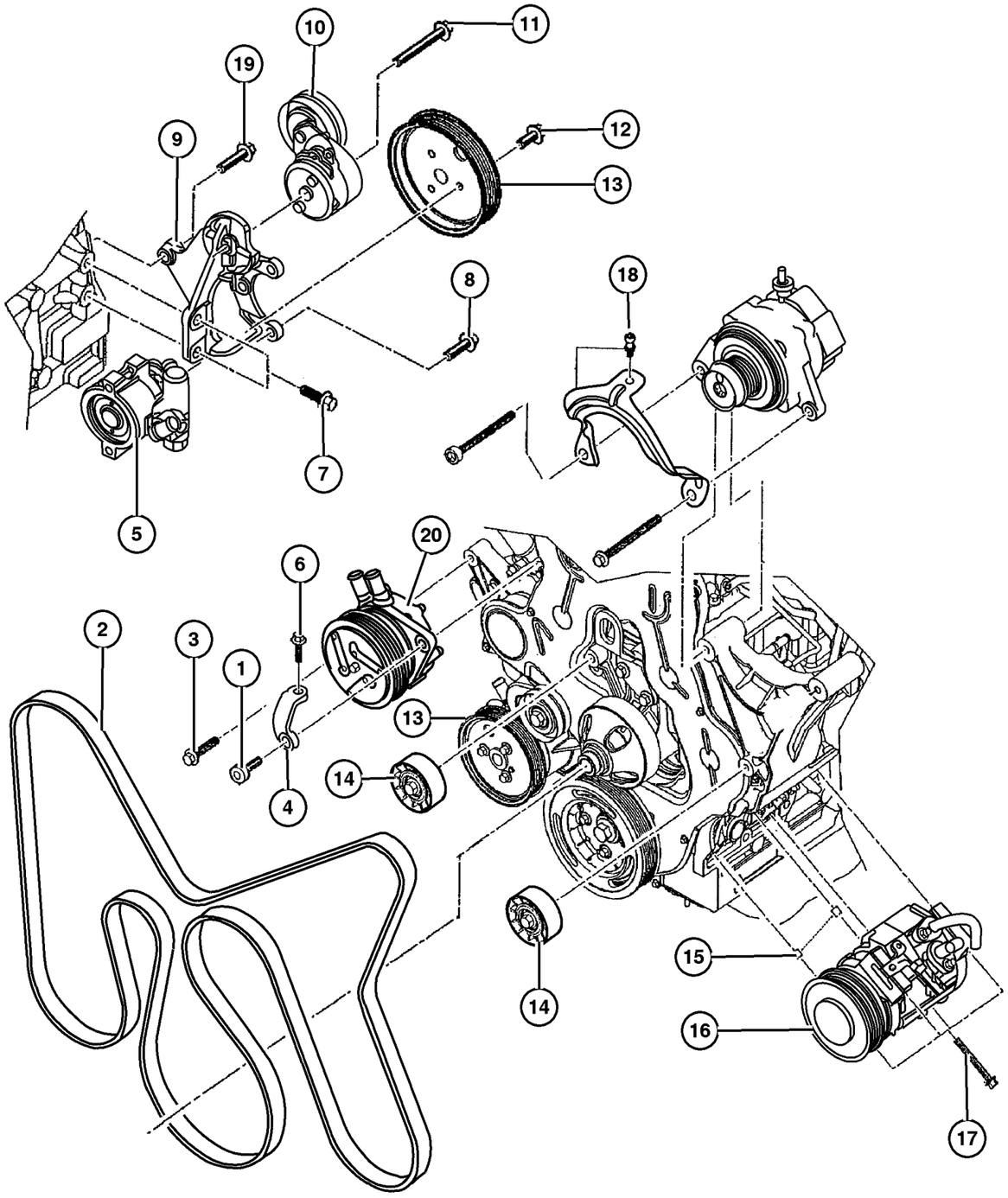

ITEM	PART NUMBER	QTY	LINE	SERIES	BODY	ENGINE	TRANS	TRIM	DESCRIPTION
Ote; Sales Codes									
[EN0]= All 4 Cylinder Diesel Engine									
1	5093 933AA	1				EN0	DBB		SCREW
2	5072 437AC	1				EN0	DBB		BELT, Accessory Drive
3	5003 533AB	4				EN0	DBB		BOLT, M10x45
4	5142 647AA	1				EN0	DBB		BRACKET
5	52088 712AC	1				EN0	DBB		PUMP, Power Steering
6	5003 557AA	2				EN0	DBB		SCREW
7	5003 532AB	10				EN0	DBB		BOLT, Adaptor Plate
8	5066 986AA	1				EN0	DBB		SCREW
9	5093 935AA	1				EN0	DBB		BRACKET, Tensioner
10	5072 440AB	1				EN0	DBB		TENSIONER, Belt
11	5015 612AB	1				EN0	DBB		SCREW
12	5003 554AB	1				EN0	DBB		BOLT
13	5072 441AA	1				EN0	DG0		PULLEY, Power Steering Pump
14	5066 938AA	2				EN0	DBB		PULLEY, Idler
15	5066 930AA	1				EN0	DBB		PIN
16	55037 467AC	1				EN0	DBB		COMPRESSOR, Air Conditioning
17	5015 032AA	4				EN0	DBB		SCREW
18	5093 941AA	1				EN0	DBB		SCREW
19	4897 253AB	4				EN0	DBB		BOLT, Hex Flange Head, M10x35
20	55037 539AA	1				EN0	DBB		HEATER, Engine

2006 Liberty (KJ)

SERIES	LINE	BODY	ENGINE	TRANSMISSION
H =HIGHLINE	T =JEEP - 2WD	74 =SPORT UTILITY 4-DR	EKG=3.7L V6 Eng.	DG6=4-Spd. Auto. 42RLE Trans.
M =MEDIUM	J =JEEP - 4WD		ENR=2.8L 4 Cyl Turbo Diesel Eng.	DGV=4-Spd. Auto. VLP Trans.
P =PREMIUM	U =JEEP - 4WD (RHD)		ENJ=2.5L 4 Cyl 16V Turbo Diesel Eng.	DGQ=5-Spd Auto. 5-45RFE Trans.
			ED1=2.4L 4 Cyl DOHC 16v SMPI Eng.	DEH=6-Speed Man. NSG370 Trans.
				DDD=5-Speed HD Man. Trans.
				DDK=5-Speed HD Man. Trans.

Drive Belts, 3.7L Engine
Figure 007-520

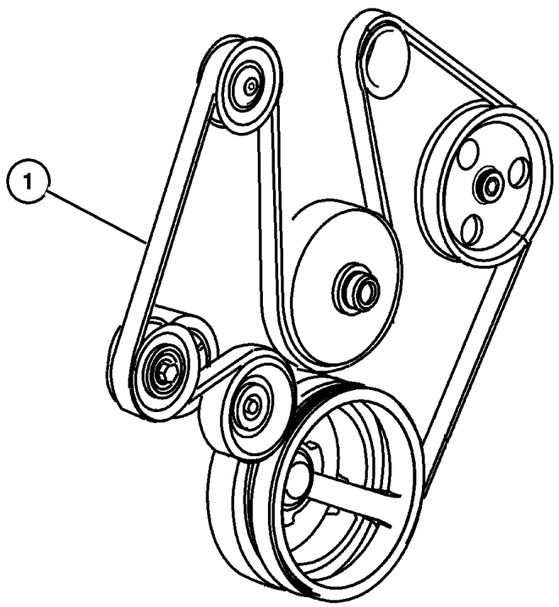

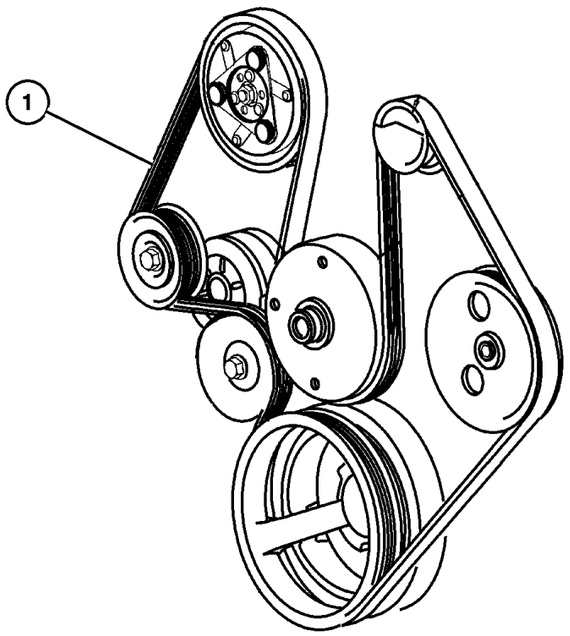

ITEM	PART NUMBER	QTY	LINE	SERIES	BODY	ENGINE	TRANS	TRIM	DESCRIPTION
Note; Sales Codes									
[EK0] = All 3.7L, 6 Cylinder Gas Engines									
1	53013 905AA	1				EK0			BELT, Accessory Drive, with or without Air Conditioning

2006 Liberty (KJ)

SERIES	LINE	BODY	ENGINE	TRANSMISSION
H =HIGHLINE	T =JEEP - 2WD	74 =SPORT UTILITY 4-DR	EKG=3.7L V6 Eng.	DG6=4-Spd. Auto. 42RLE Trans.
M =MEDIUM	J =JEEP - 4WD		ENR=2.8L 4 Cyl Turbo Diesel Eng.	DGV=4-Spd. Auto. VLP Trans.
P =PREMIUM	U =JEEP - 4WD (RHD)		ENJ=2.5L 4 Cyl 16V Turbo Diesel Eng.	DGQ=5-Spd Auto. 5-45RFE Trans.
			ED1=2.4L 4 Cyl DOHC 16v SMPI Eng.	DEH=6-Speed Man. NSG370 Trans.
				DDD=5-Speed HD Man. Trans.
				DDK=5-Speed HD Man. Trans.

Drive Belts, 2.8L Diesel Engine
Figure 007-530

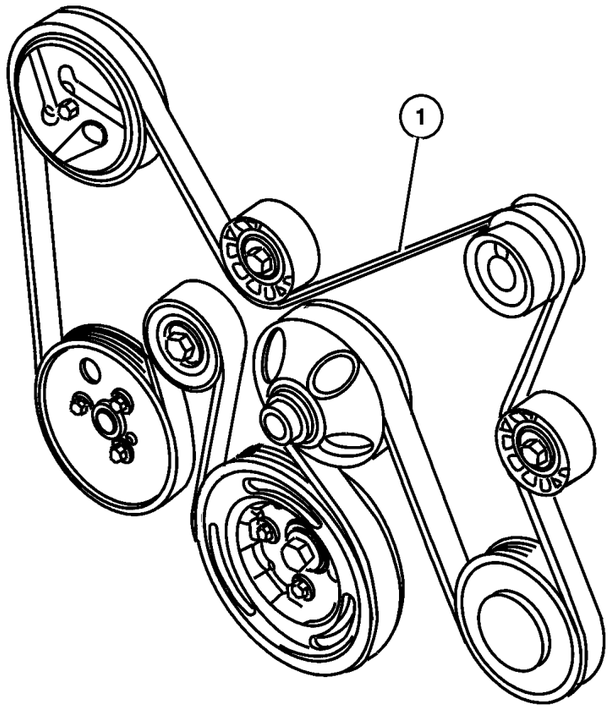

ITEM	PART NUMBER	QTY	LINE	SERIES	BODY	ENGINE	TRANS	TRIM	DESCRIPTION
Note; Sales Codes									
[EN0]= All 4 Cylinder Diesel Engines									
1	5072 437AC	1				EN0	DBB		BELT, Accessory Drive

2006 Liberty (KJ)

SERIES	LINE	BODY	ENGINE	TRANSMISSION
H =HIGHLINE	T =JEEP - 2WD	74 =SPORT UTILITY 4-DR	EKG=3.7L V6 Eng.	DG6=4-Spd. Auto. 42RLE Trans.
M =MEDIUM	J =JEEP - 4WD		ENR=2.8L 4 Cyl Turbo Diesel Eng.	DGV=4-Spd. Auto. VLP Trans.
P =PREMIUM	U =JEEP - 4WD (RHD)		ENJ=2.5L 4 Cyl 16V Turbo Diesel Eng.	DGQ=5-Spd Auto. 5-45RFE Trans.
			ED1=2.4L 4 Cyl DOHC 16v SMPI Eng.	DEH=6-Speed Man. NSG370 Trans.
				DDD=5-Speed HD Man. Trans.
				DDK=5-Speed HD Man. Trans.

Oil Cooler Lines
Figure 007-610

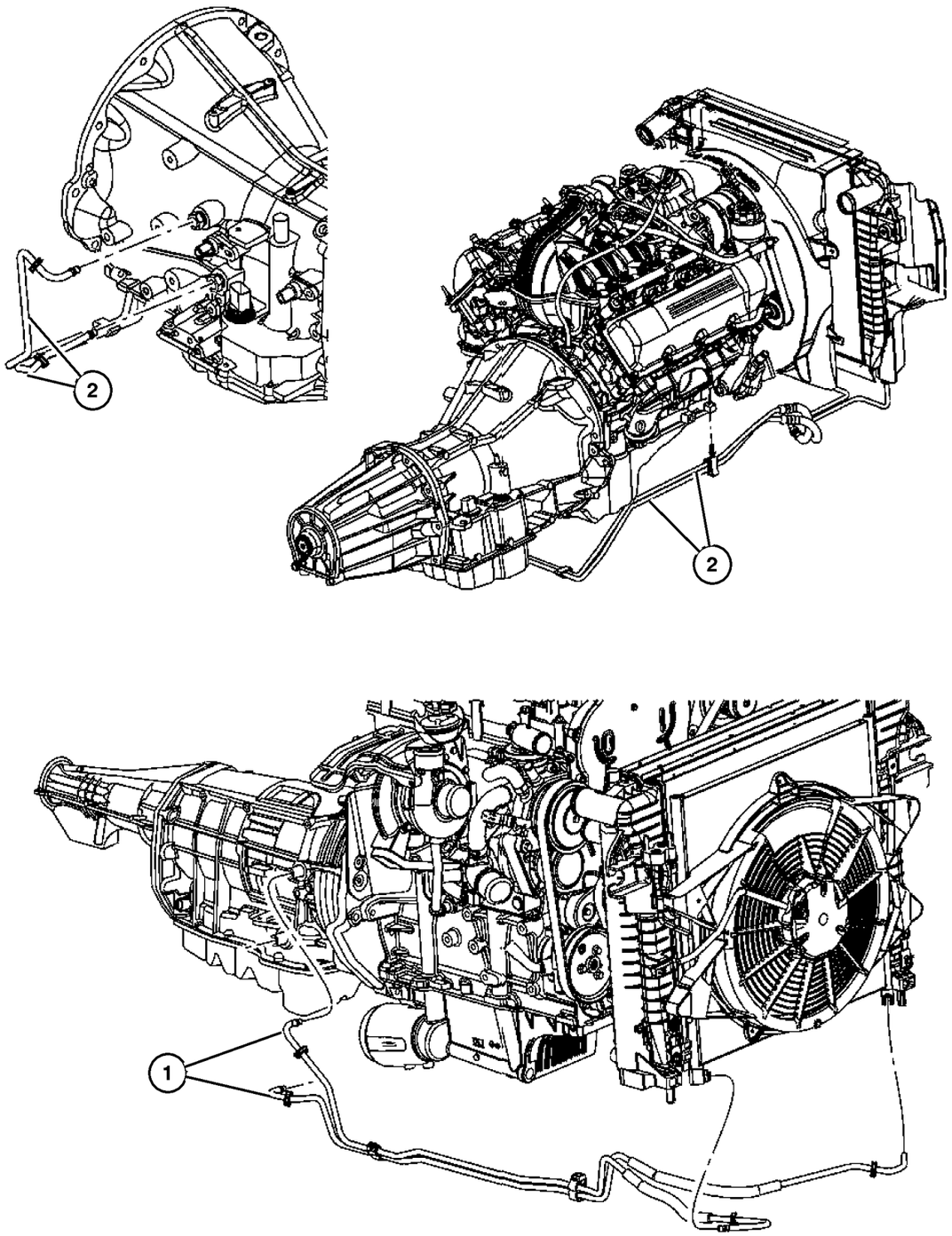

ITEM	PART NUMBER	QTY	LINE	SERIES	BODY	ENGINE	TRANS	TRIM	DESCRIPTION
Note; Sales Codes									
[DG0] = All Automatic Transmissions									
[EN0] = All 4/5 Cylinder Turbo Diesel Engines									
1	55037 785AC	1					DG6		TUBE & HOSE, Supply & Return
2	55037 734AD	1				EN0	DG0		TUBE & HOSE, Supply & Return

2006 Liberty (KJ)

SERIES	LINE	BODY	ENGINE	TRANSMISSION
H =HIGHLINE	T =JEEP - 2WD	74 =SPORT UTILITY 4-DR	EKG=3.7L V6 Eng.	DG6=4-Spd. Auto. 42RLE Trans.
M =MEDIUM	J =JEEP - 4WD		ENR=2.8L 4 Cyl Turbo Diesel Eng.	DGV=4-Spd. Auto. VLP Trans.
P =PREMIUM	U =JEEP - 4WD (RHD)		ENJ=2.5L 4 Cyl 16V Turbo Diesel Eng.	DGQ=5-Spd Auto. 5-45RFE Trans.
			ED1=2.4L 4 Cyl DOHC 16v SMPI Eng.	DEH=6-Speed Man. NSG370 Trans.
				DDD=5-Speed HD Man. Trans.
				DDK=5-Speed HD Man. Trans.

Grille and Related Parts
Figure 007-710

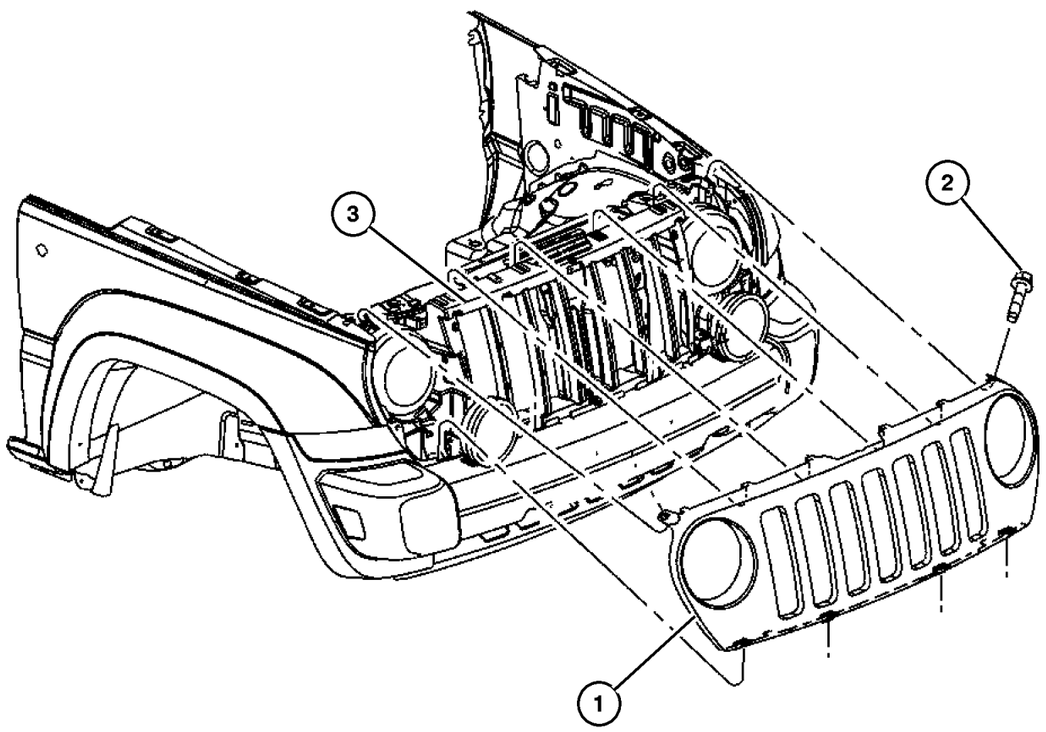

ITEM	PART NUMBER	QTY	LINE	SERIES	BODY	ENGINE	TRANS	TRIM	DESCRIPTION
NOTES; Sales Codes:									
[DBB] = ALL MANUAL TRANSMISSIONS									
[EN0-] = ALL 4/5 CYLINDER TURBO DIESEL ENGINES									
1									GRILLE, Radiator
	55156 805AD	1							[MFZ], Chrome
	5JR27 AJCAD	1							[AJC]
	5JR27 BJTAD	1							[BJT]
	5JR27 CGVAD	1							[CGV]
	5JR27 DX8AD	1							[DX8]
	5JR27 TZZAD	1							[TZZ]
	5JR27 WS2AD	1							[WS2]
2	4720 658	1				EN0	DBB		SCREW
3									REINFORCEMENT, Grille Opening
	55156 968AF	1	J, T						
		1	J						

2006 Liberty (KJ)

SERIES	LINE	BODY	ENGINE	TRANSMISSION
H =HIGHLINE	T =JEEP - 2WD	74 =SPORT UTILITY 4-DR	EKG=3.7L V6 Eng.	DG6=4-Spd. Auto. 42RLE Trans.
M =MEDIUM	J =JEEP - 4WD		ENR=2.8L 4 Cyl Turbo Diesel Eng.	DGV=4-Spd. Auto. VLP Trans.
P =PREMIUM	U =JEEP - 4WD (RHD)		ENJ=2.5L 4 Cyl 16V Turbo Diesel Eng.	DGQ=5-Spd Auto. 5-45RFE Trans.
			ED1=2.4L 4 Cyl DOHC 16v SMPI Eng.	DEH=6-Speed Man. NSG370 Trans.
				DDD=5-Speed HD Man. Trans.
				DDK=5-Speed HD Man. Trans.

Group – 008
Electrical

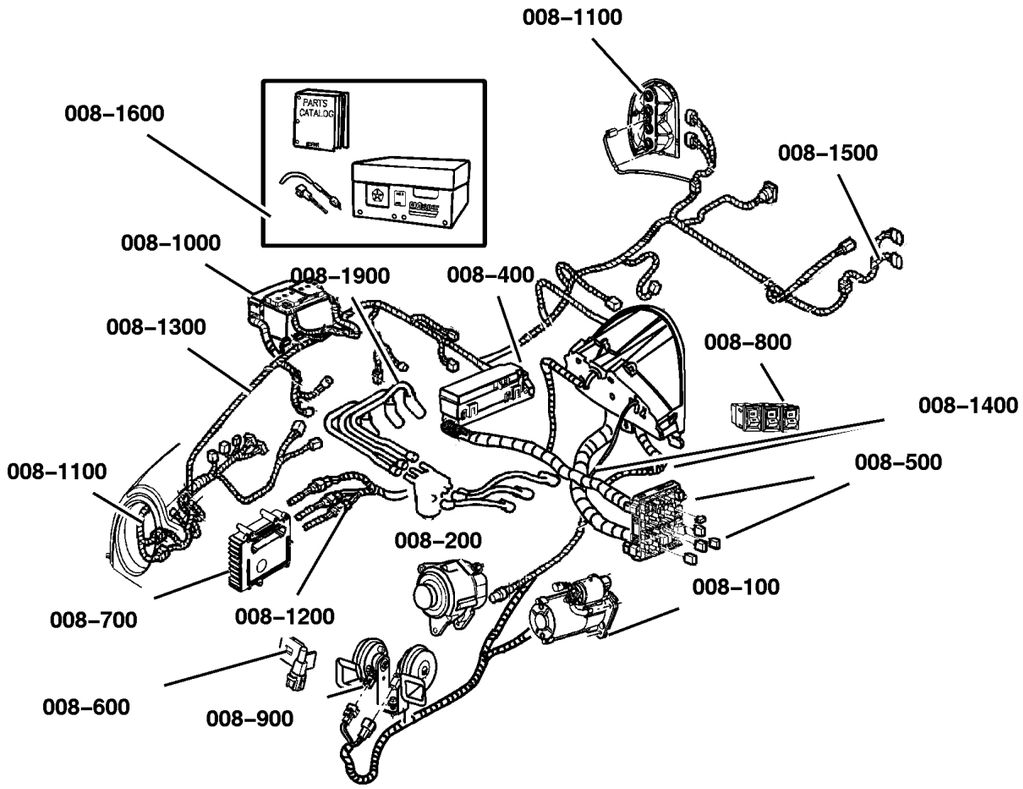

008–100 Starters 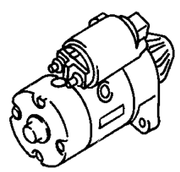	**008–200** Alternators 	**008–400** Modules 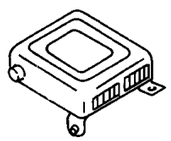	**008–500** Relays 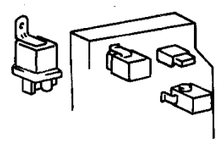
008–600 Sensors 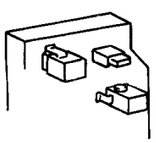	**008–700** Single Board Engine Controllers 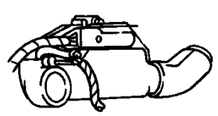	**008–800** Switches 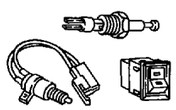	**008–900** Horns 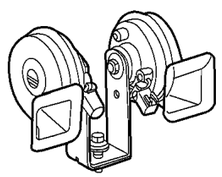

Group – 008
Electrical

008–1000 Battery Tray, Cables and Block Heaters 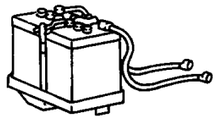	**008–1100** Lamps – Front, Rear and Courtesy 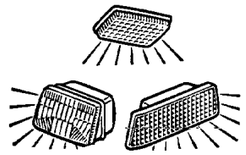	**008–1200** Wiring–Engine & Related Parts 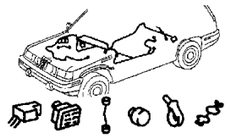	**008–1300** Wiring–Headlamp to Dash
008–1400 Wiring–Instrument Panel WIRING INSTR. PANEL	**008–1500** Wiring–Body & Accessories 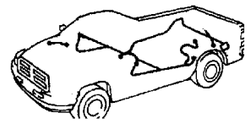	**008–1600** Wiring Repair WIRING REPAIR PKG.	**008–1700** Air Bag Systems
008–1900 Spark Plugs–Cables–Coils 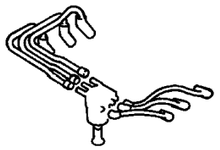			

Illustration Title	Group-Fig. No.
Starters	
Starter and Mounting [3.7L EK0]	Fig. 008-110
Starter and Mounting, [2.8L EN0]	Fig. 008-115
Alternators	
Alternator [3.7L EK0]	Fig. 008-210
Alternator [2.8L EN0]	Fig. 008-215
Modules	
Modules	Fig. 008-405
Relays	
Power Distribution Center, [3.7L EK0]	Fig. 008-505
Power Distribution Center [2.8L EN0]	Fig. 008-510
Junction Block, Relays, Circuit Breaker	Fig. 008-515
Sensors	
Sensors, Engine (3.7L EK0]	Fig. 008-610
Sensors, Engine (2.8L EN0]	Fig. 008-615
Sensors, Oxygen [3.7L EK0]	Fig. 008-625
Sensor (Drive Train)	Fig. 008-635
Sensor (Body)	Fig. 008-640
Single Board Engine Controllers	
Powertrain Control Modules	Fig. 008-705
Switches	
Switches (Instrument Panel and Console)	Fig. 008-810
Switches (Drive Train)	Fig. 008-820
Switches (Body)	Fig. 008-830
Horns	
Horns	Fig. 008-905
Battery Tray, Cables and Block Heaters	
Battery Tray & Cables	Fig. 008-1005
Engine Block Heaters	Fig. 008-1010
Lamps - Front, Rear and Courtesy	
Lamp, Front	Fig. 008-1105
Lamps Roof (Renegade)	Fig. 008-1110
Lamp, Rear	Fig. 008-1115
Lamp, Courtesy	Fig. 008-1120
Bulbs	Fig. 008-1125
Wiring-Engine & Related Parts	
Wiring, Engine and Related Parts 4 Cylinder	Fig. 008-1205
Wiring, Engine and Related Parts 6 cylinder	Fig. 008-1210

GROUP 8 - Electrical

Illustration Title	Group-Fig. No.
Wiring-Engine & Related Parts (Continued)	
Ground Straps	Fig. 008-1215
Wiring-Headlamp to Dash	
Wiring, Headlamp to Dash	Fig. 008-1305
Wiring-Instrument Panel	
Wiring Instrument Panel	Fig. 008-1405
Wiring-Body & Accessories	
Wiring, Body & Accessories	Fig. 008-1505
Wiring Doors and Tail Gate	Fig. 008-1510
Wiring Seats	Fig. 008-1515
Wiring Repair	
Wiring, Repair Package	Fig. 008-1610
Air Bag Systems	
Air Bag Module and Sensors	Fig. 008-1705
Air Bags and Clock Spring	Fig. 008-1710
Spark Plugs-Cables-Coils	
Spark Plug - Coil	Fig. 008-1905
Glow Plugs	Fig. 008-1910

Starter and Mounting [3.7L EK0]
Figure 008-110

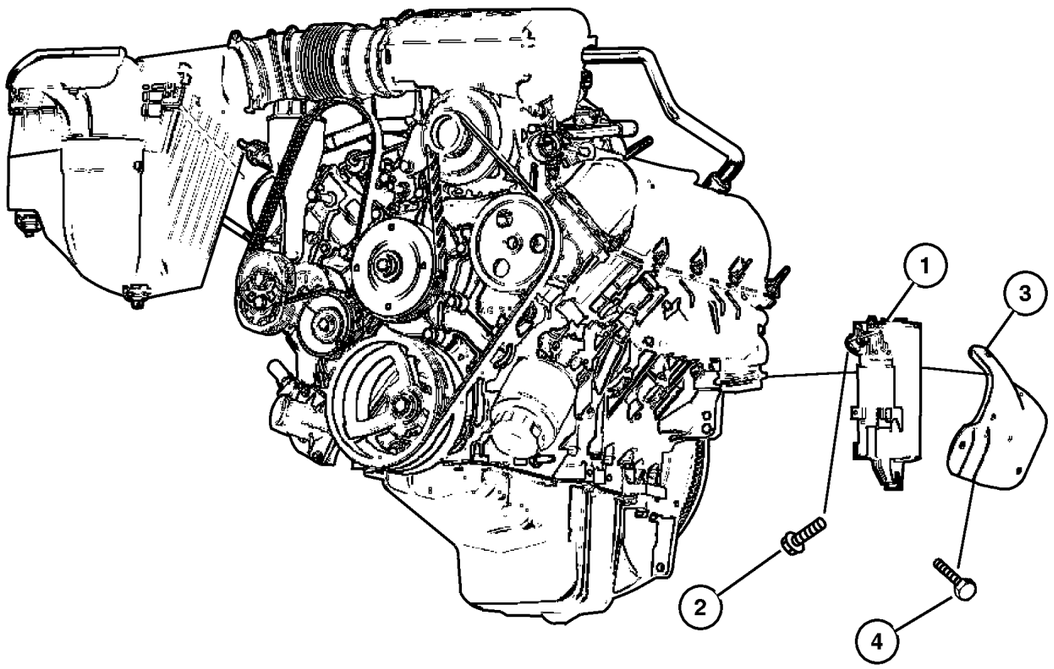

ITEM	PART NUMBER	QTY	LINE	SERIES	BODY	ENGINE	TRANS	TRIM	DESCRIPTION
Notes:									
[EK0]=3.7L V6 Engine									
[ED0] = 2.4L 4 Cylinder Engine									
1	56044 735AB	1				EK0			STARTER
2	6102 120AA	2				EK0			SCREW AND WASHER, Hex Head
3	56044 116AD	1				EK0			SHIELD, Starter
4									SCREW, Hex Flange Head, M12X1.75X110.00, M6x1x12, (NOT SERVICED) (Not Serviced)

2006 Liberty (KJ)

SERIES	LINE	BODY	ENGINE	TRANSMISSION
H =HIGHLINE	T =JEEP - 2WD	74 =SPORT UTILITY 4-DR	EKG=3.7L V6 Eng.	DG6=4-Spd. Auto. 42RLE Trans.
M =MEDIUM	J =JEEP - 4WD		ENR=2.8L 4 Cyl Turbo Diesel Eng.	DGV=4-Spd. Auto. VLP Trans.
P =PREMIUM	U =JEEP - 4WD (RHD)		ENJ=2.5L 4 Cyl 16V Turbo Diesel Eng.	DGQ=5-Spd Auto. 5-45RFE Trans.
			ED1=2.4L 4 Cyl DOHC 16v SMPI Eng.	DEH=6-Speed Man. NSG370 Trans.
				DDD=5-Speed HD Man. Trans.
				DDK=5-Speed HD Man. Trans.

Starter and Mounting, [2.8L EN0]
Figure 008-115

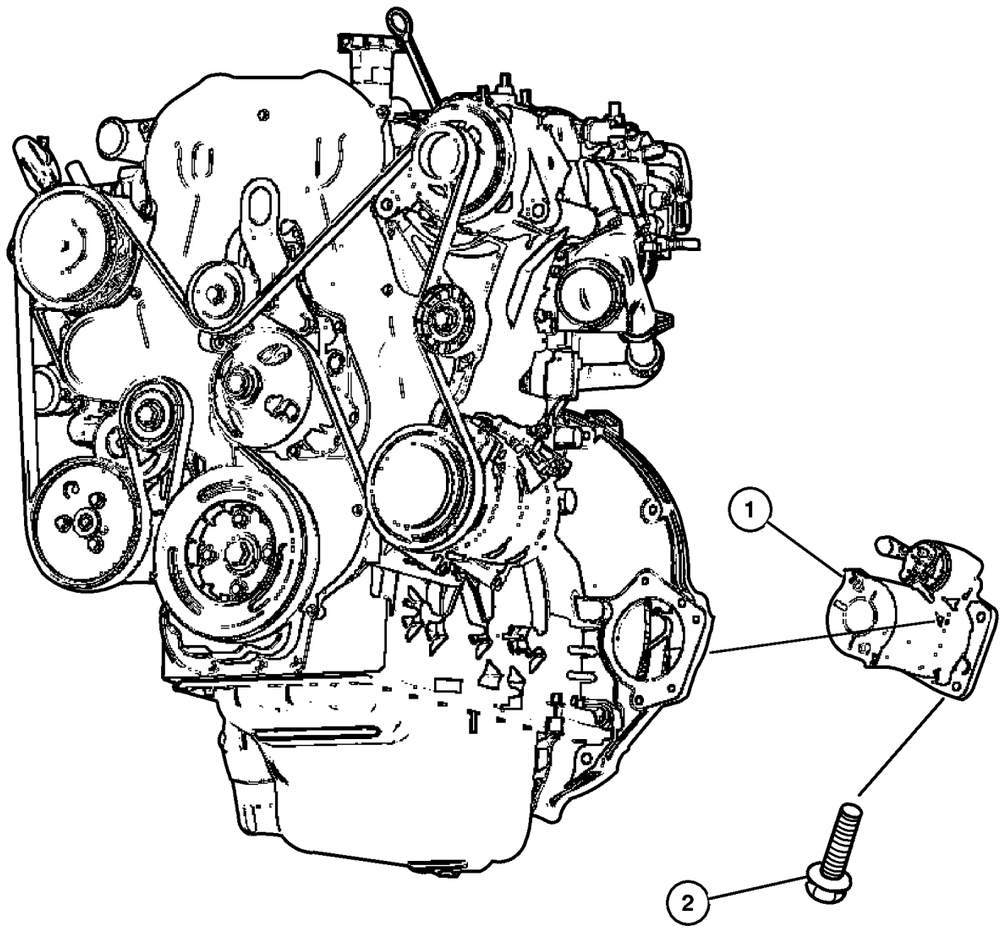

ITEM	PART NUMBER	QTY	LINE	SERIES	BODY	ENGINE	TRANS	TRIM	DESCRIPTION
1	56041 579AB	1				EN0			STARTER
2	6504 171	3				EN0			SCREW, Hex Flange Head, M8x1.25x32
-3									WASHER, Starter
	4723 279	6				EN0	DG0		
		6				EN0	DBB		

2006 Liberty (KJ)

SERIES	LINE	BODY	ENGINE	TRANSMISSION
H =HIGHLINE	T =JEEP - 2WD	74 =SPORT UTILITY 4-DR	EKG=3.7L V6 Eng.	DG6=4-Spd. Auto. 42RLE Trans.
M =MEDIUM	J =JEEP - 4WD		ENR=2.8L 4 Cyl Turbo Diesel Eng.	DGV=4-Spd. Auto. VLP Trans.
P =PREMIUM	U =JEEP - 4WD (RHD)		ENJ=2.5L 4 Cyl 16V Turbo Diesel Eng.	DGQ=5-Spd Auto. 5-45RFE Trans.
			ED1=2.4L 4 Cyl DOHC 16v SMPI Eng.	DEH=6-Speed Man. NSG370 Trans.
				DDD=5-Speed HD Man. Trans.
				DDK=5-Speed HD Man. Trans.

Alternator [3.7L EK0]
Figure 008-210

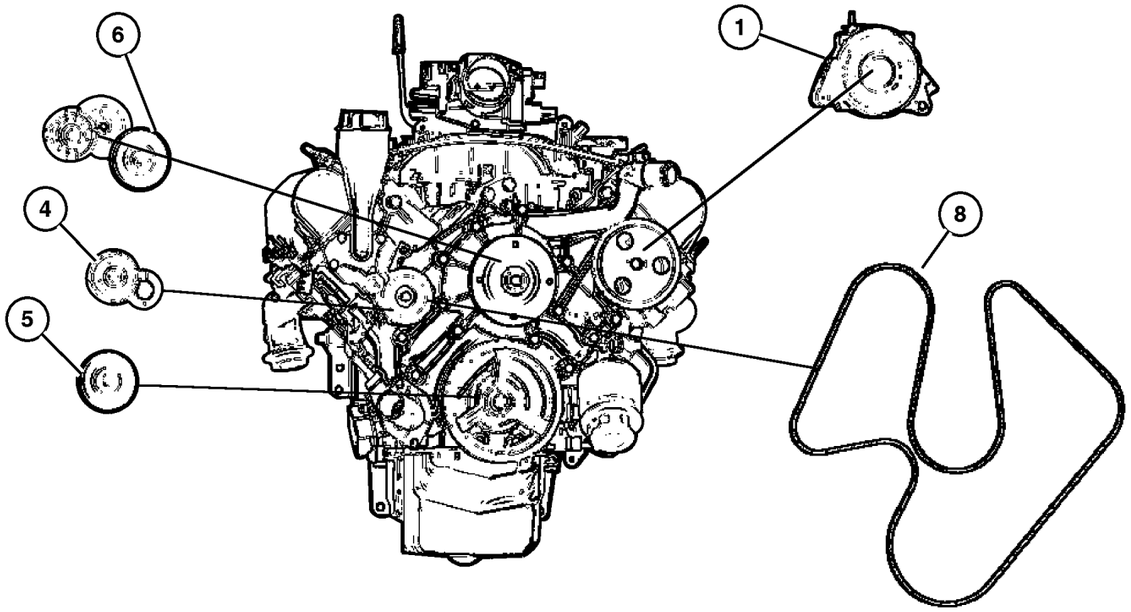

ITEM	PART NUMBER	QTY	LINE	SERIES	BODY	ENGINE	TRANS	TRIM	DESCRIPTION
Notes:									
[ED0]=2.4L 4 Cylinder Engine									
[EK0] = 3.7L V6 Engine									
1									ALTERNATOR
	5170 748AA	1		M		EK0			[BAB]
	5170 749AA	1		H, P		EK0			[BAZ]
-2	6504 344	1				EK0			SCREW AND WASHER, Hex Head, Alternator to Front Cover Attaching
-3	6505 482AA-	1				EK0			SCREW AND WASHER, Hex Head, M8x1.25x50, Alternator to Cylinder Head
4	5303 0959	1				EK0			BRACKET, Idler Pulley
5	5303 1045	1				EK0			PULLEY, Idler
6	53030 958AD	1				EK0			TENSIONER, Alternator Belt
-7	6505 488AA-	1				EK0			SCREW AND WASHER, Hex, Alternator to Front Cover attaching
8	53013 905AA	1				EK0			BELT, Accessory Drive

2006 Liberty (KJ)

SERIES	LINE	BODY	ENGINE	TRANSMISSION
H =HIGHLINE	T =JEEP - 2WD	74 =SPORT UTILITY 4-DR	EKG=3.7L V6 Eng.	DG6=4-Spd. Auto. 42RLE Trans.
M =MEDIUM	J =JEEP - 4WD		ENR=2.8L 4 Cyl Turbo Diesel Eng.	DGV=4-Spd. Auto. VLP Trans.
P =PREMIUM	U =JEEP - 4WD (RHD)		ENJ=2.5L 4 Cyl 16V Turbo Diesel Eng.	DGQ=5-Spd Auto. 5-45RFE Trans.
			ED1=2.4L 4 Cyl DOHC 16v SMPI Eng.	DEH=6-Speed Man. NSG370 Trans.
				DDD=5-Speed HD Man. Trans.
				DDK=5-Speed HD Man. Trans.

Alternator [2.8L EN0]
Figure 008-215

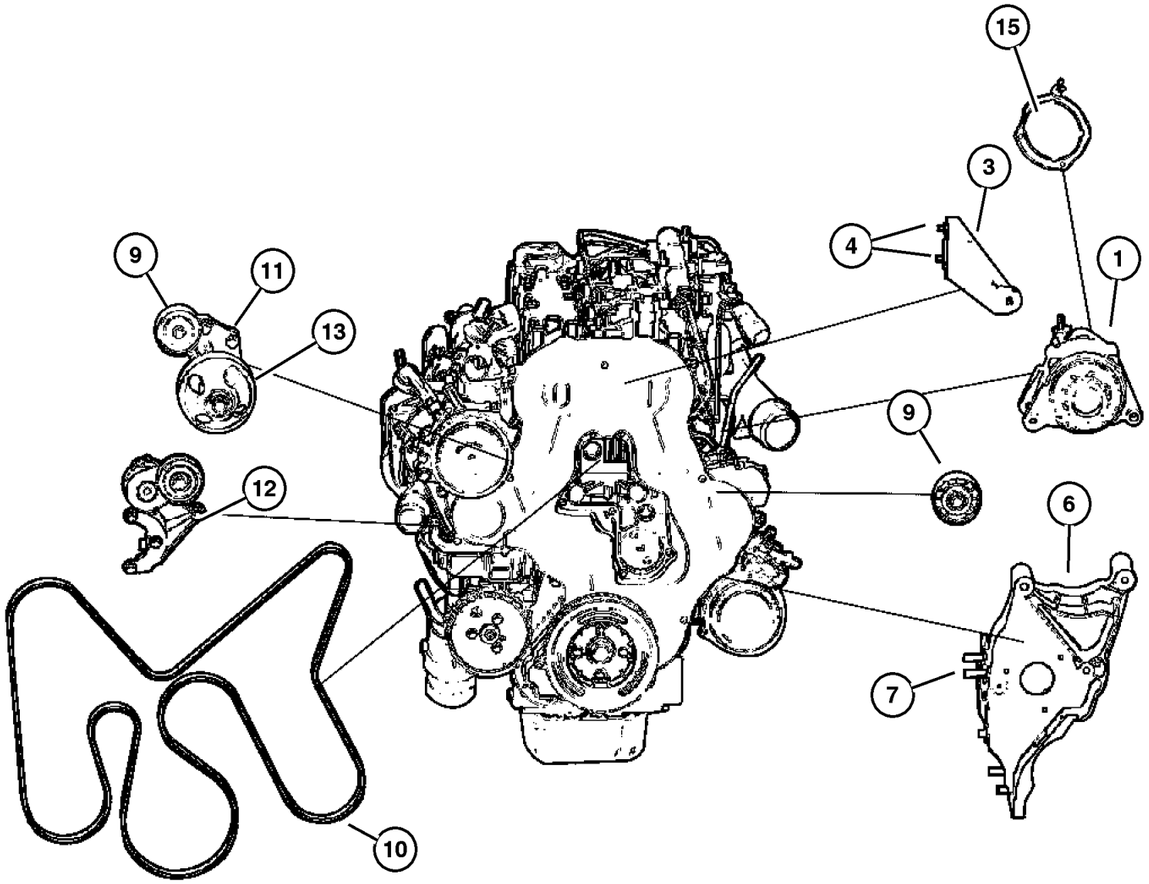

ITEM	PART NUMBER	QTY	LINE	SERIES	BODY	ENGINE	TRANS	TRIM	DESCRIPTION
Notes:									
[EN0]=All 4/5 Cylinder Turbo Diesel Engines									
[DBB]=All Manual Transmissions									
[DG0]=All Automatic Transmissions									
1									ALTERNATOR
	5142 615AA	1				EN0	DG0		Export
		1				EN0	DBB		
	56044 672AB	1				EN0	DG0		
-2									BOLT, Hex Flange Head
	5015 067AB-	1				EN0	DG0		
		1				EN0	DBB		
3									BRACKET, Alternator
	5093 939AA	1				EN0	DG0		
		1				EN0	DBB		
4									BOLT, Hex Head, M8x1.25x16
	6501 474	1	T				DG6		
		1	J, U				DG6		
-5	6502 696	2							NUT, Hex Flange Lock, M10x1.5
6									BRACKET, Accessory Mount
	5142 553AA	1				EN0	DG0		
		1				EN0	DBB		
7									BOLT, Adaptor Plate
	5003 532AB	10				EN0	DG0		
		10				EN0	DBB		
-8									PIN
	5066 834AA-	2				EN0	DBB		
		1				EN0	DG0		
9									PULLEY, Idler
	5066 938AA	2				EN0	DG0		
		2				EN0	DBB		
10									BELT, Accessory Drive
	5072 437AC	1				EN0	DG0		
		1				EN0	DBB		
11									BRACKET, Tensioner
	5093 935AA	1				EN0	DG0		
		1				EN0	DBB		
12									TENSIONER, Belt
	5072 440AB	1				EN0	DG0		
		1				EN0	DBB		
13									PUMP, Power Steering, see group 19, (NOT SERVICED) (Not Serviced)
-14									PULLEY, Alternator

2006 Liberty (KJ)

SERIES	LINE	BODY	ENGINE	TRANSMISSION
H =HIGHLINE	T =JEEP - 2WD	74 =SPORT UTILITY 4-DR	EKG=3.7L V6 Eng.	DG6=4-Spd. Auto. 42RLE Trans.
M =MEDIUM	J =JEEP - 4WD		ENR=2.8L 4 Cyl Turbo Diesel Eng.	DGV=4-Spd. Auto. VLP Trans.
P =PREMIUM	U =JEEP - 4WD (RHD)		ENJ=2.5L 4 Cyl 16V Turbo Diesel Eng.	DGQ=5-Spd Auto. 5-45RFE Trans.
			ED1=2.4L 4 Cyl DOHC 16v SMPI Eng.	DEH=6-Speed Man. NSG370 Trans.
				DDD=5-Speed HD Man. Trans.
				DDK=5-Speed HD Man. Trans.

Alternator [2.8L EN0]
Figure 008-215

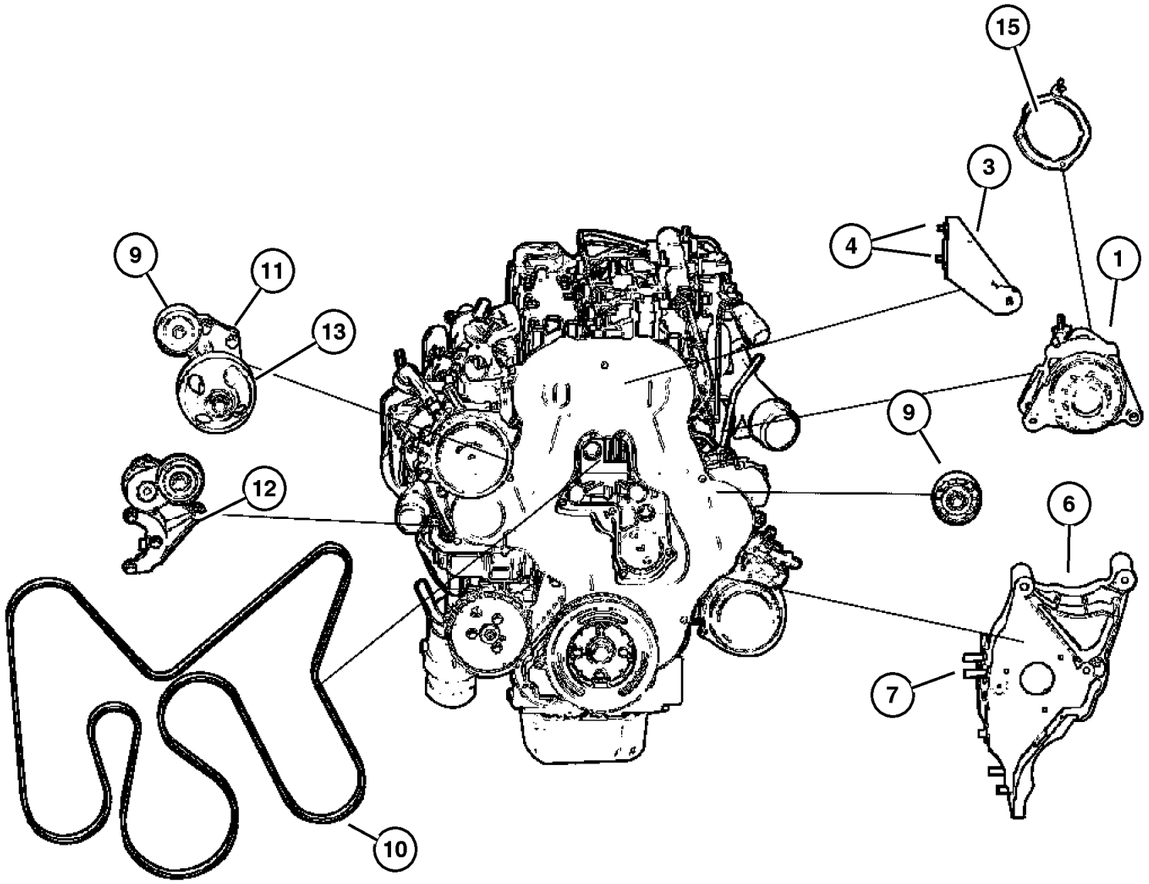

ITEM	PART NUMBER	QTY	LINE	SERIES	BODY	ENGINE	TRANS	TRIM	DESCRIPTION
	53013 554AE-	1				EN0	DG0		
		1				EN0	DBB		
15									BRACKET, Alternator
	5142 547AA	1				EN0	DG0		
		1				EN0	DBB		

2006 Liberty (KJ)

SERIES	LINE	BODY	ENGINE	TRANSMISSION
H =HIGHLINE	T =JEEP - 2WD	74 =SPORT UTILITY 4-DR	EKG=3.7L V6 Eng.	DG6=4-Spd. Auto. 42RLE Trans.
M =MEDIUM	J =JEEP - 4WD		ENR=2.8L 4 Cyl Turbo Diesel Eng.	DGV=4-Spd. Auto. VLP Trans.
P =PREMIUM	U =JEEP - 4WD (RHD)		ENJ=2.5L 4 Cyl 16V Turbo Diesel Eng.	DGQ=5-Spd Auto. 5-45RFE Trans.
			ED1=2.4L 4 Cyl DOHC 16v SMPI Eng.	DEH=6-Speed Man. NSG370 Trans.
				DDD=5-Speed HD Man. Trans.
				DDK=5-Speed HD Man. Trans.

Modules
Figure 008-405

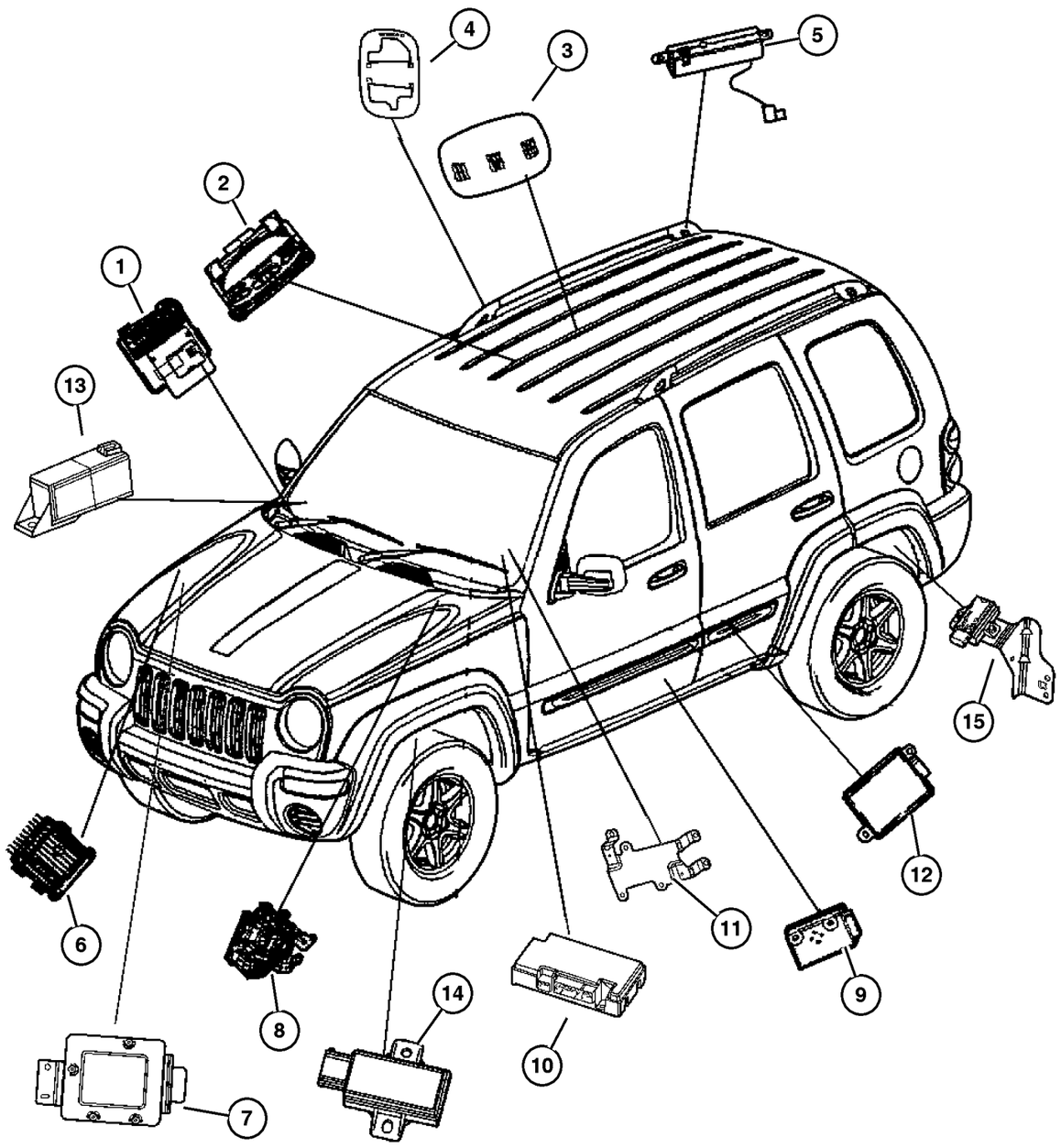

ITEM	PART NUMBER	QTY	LINE	SERIES	BODY	ENGINE	TRANS	TRIM	DESCRIPTION
Notes:									
[EKG]=3.7L 6 Cylinder Engine									
[EN0]= All 4/5 Cylinder Turbo Diesel Engine									
[DG0]=All Automatic Transmissions									
[DG4] =Multi-Speed Automatic Transmissions									
[DG6]=All 4 Speed Automatic Transmissions									
[DGQ]=All 5 Speed Automatic Transmissions									
1									MODULE, Body Controller
	5179 293AC	1				EN0			
	5179 637AC	1				EK0			
2									MODULE, Overhead Console
	56010 520AD	1	J, T						
	56010 527AD	1	J, U						
3	5GV82 BD1AG	1	J, U						MODULE, Intrusion
4	56010 331AB	1	J, U						RETAINER, Electronic Module
5									ANTENNA
	56038 526AF	1							[RDD]
	56038 527AE	1							[RDL]
6	56044 737AF	1				EN0	DGQ		MODULE, Transmission Control
7	56041 377AB	1	J, T			EN0	DGQ		BRACKET, Transmission Control Unit
8	5179 773AA	1				EK0			MODULE, Anti-lock Brakes
9									MODULE, Heated Seat Control
	56010 113AA	1	J, T						
		1	J, U						
10	5064 022AQ	1							MODULE, Telematics
11	56038 763AB	1							BRACKET, Module
12									CONTROL MODULE, Receiver
	56053 011AF	1							[LAB]
	56053 012AF	1							[XGM,GXX,GXM]
	5026 118AB	1							[GXX,GXW,LAB,XGM], Export
	56053 015AG	1							[GXX,GX1]
	56053 020AF	1							[GXX,GXW,LAB]
13	56044 671AA	1				EN0			MODULE, Glow Plug
14									TRIGGER, Tire Pressure
	56044 713AB	1							Left
	56044 714AB	1							Right
15	56044 716AC	1							TRIGGER, Tire Pressure, Right,Rear

2006 Liberty (KJ)

SERIES	LINE	BODY	ENGINE	TRANSMISSION
H =HIGHLINE	T =JEEP - 2WD	74 =SPORT UTILITY 4-DR	EKG=3.7L V6 Eng.	DG6=4-Spd. Auto. 42RLE Trans.
M =MEDIUM	J =JEEP - 4WD		ENR=2.8L 4 Cyl Turbo Diesel Eng.	DGV=4-Spd. Auto. VLP Trans.
P =PREMIUM	U =JEEP - 4WD (RHD)		ENJ=2.5L 4 Cyl 16V Turbo Diesel Eng.	DGQ=5-Spd Auto. 5-45RFE Trans.
			ED1=2.4L 4 Cyl DOHC 16v SMPI Eng.	DEH=6-Speed Man. NSG370 Trans.
				DDD=5-Speed HD Man. Trans.
				DDK=5-Speed HD Man. Trans.

Power Distribution Center, [3.7L EK0]
Figure 008-505

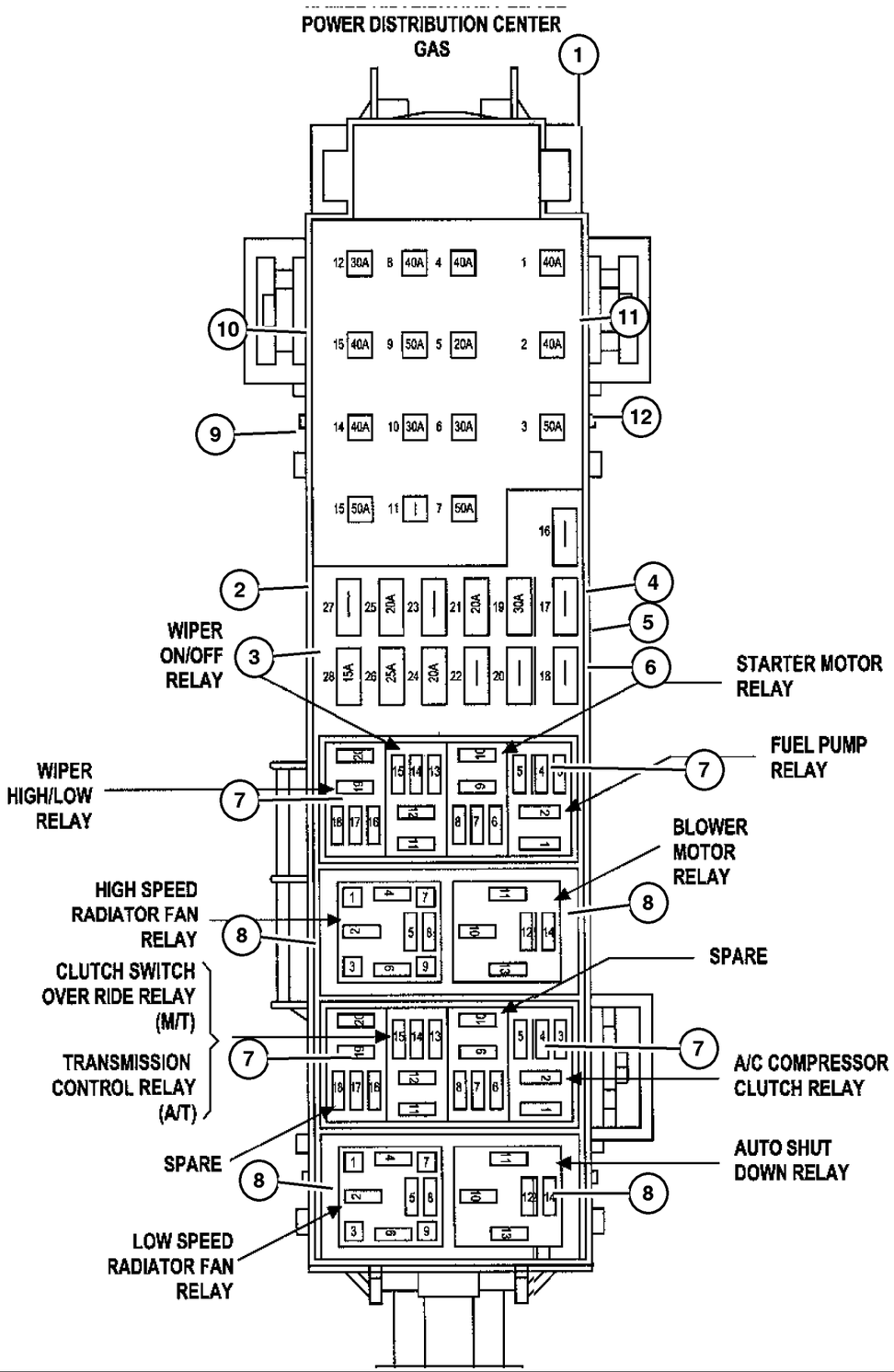

ITEM	PART NUMBER	QTY	LINE	SERIES	BODY	ENGINE	TRANS	TRIM	DESCRIPTION
1									POWER DISTRIBUTION CENTER, Serviced in headlamp to dash wiring, (NOT SERVICED) (Not Serviced)
2	00AT M10	19							FUSE, Mini, 10 AMP, Red
3	00AT M15	6							FUSE, Mini, 15 AMP, Light Blue
4	00AT M20	7							FUSE, Mini, 20 AMP, Yellow
5	00AT M25	AR							FUSE, Mini, 25 Amp, Natural
6	00AT M30	AR							FUSE, Mini, 30 AMP, Green
7	4671 168	1							RELAY, Mini
8	4671 168	1							RELAY, Mini
9	6102 075AA	AR							FUSE CARTRIDGE, 20 Amp
10	6102 076AA	AR							FUSE CARTRIDGE, 30 Amp
11	6102 077AA	AR							FUSE CARTRIDGE, 40 Amp
12	6102 078AA	AR							FUSE CARTRIDGE, 50 Amp
-13	5183 338AA-	1				ED0, EK0			COVER, Power Distribution Center
-14	56038 763AB-	1							BRACKET, Module
-15									FUSIBLE LINK
	6101 757	2					DG6, DGV		
		2					DG6		

2006 Liberty (KJ)

SERIES	LINE	BODY	ENGINE	TRANSMISSION
H =HIGHLINE	T =JEEP - 2WD	74 =SPORT UTILITY 4-DR	EKG=3.7L V6 Eng.	DG6=4-Spd. Auto. 42RLE Trans.
M =MEDIUM	J =JEEP - 4WD		ENR=2.8L 4 Cyl Turbo Diesel Eng.	DGV=4-Spd. Auto. VLP Trans.
P =PREMIUM	U =JEEP - 4WD (RHD)		ENJ=2.5L 4 Cyl 16V Turbo Diesel Eng.	DGQ=5-Spd Auto. 5-45RFE Trans.
			ED1=2.4L 4 Cyl DOHC 16v SMPI Eng.	DEH=6-Speed Man. NSG370 Trans.
				DDD=5-Speed HD Man. Trans.
				DDK=5-Speed HD Man. Trans.

Power Distribution Center [2.8L EN0]
Figure 008-510

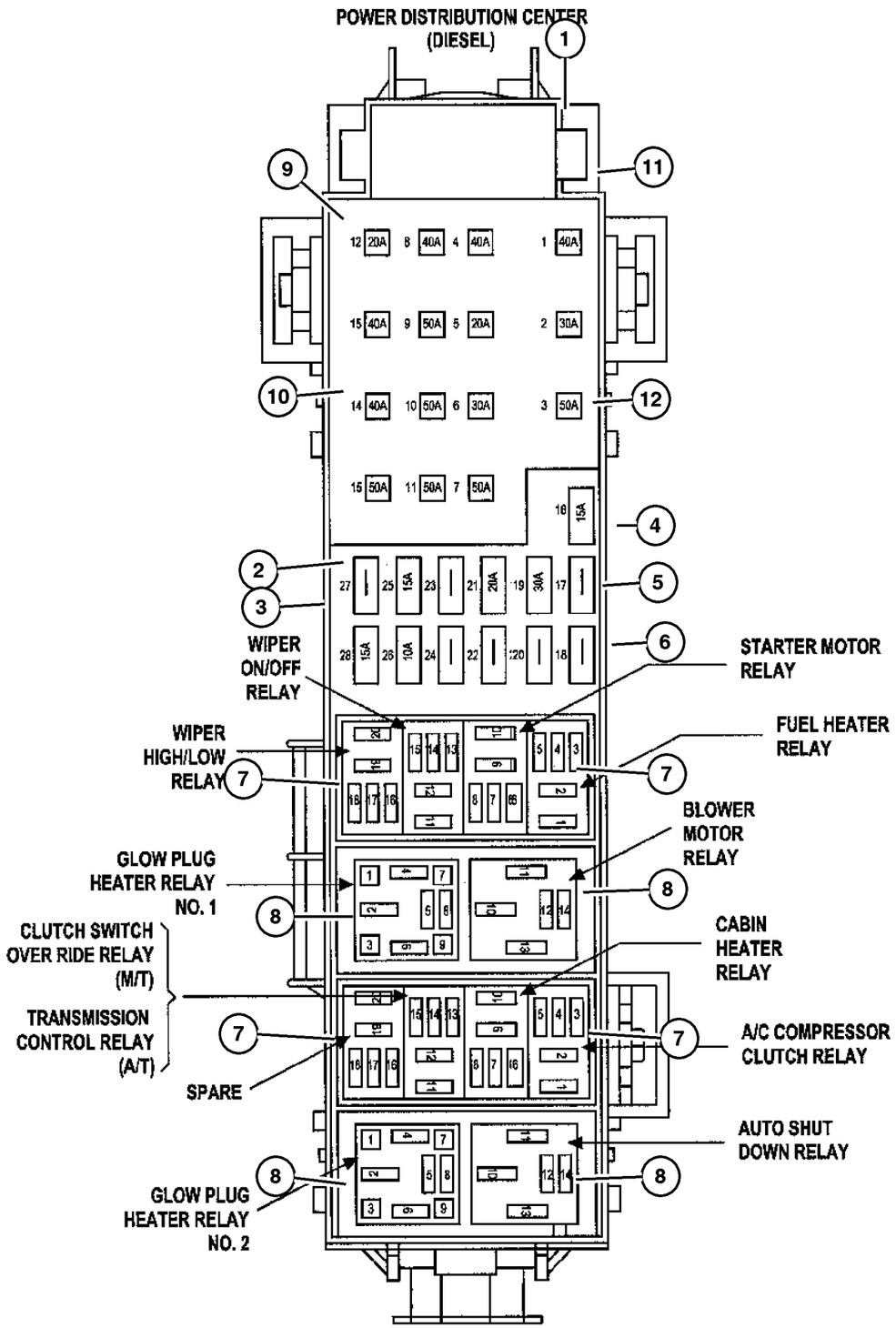

ITEM	PART NUMBER	QTY	LINE	SERIES	BODY	ENGINE	TRANS	TRIM	DESCRIPTION
1									POWER DISTRIBUTION CENTER, Serviced in headlamp to dash wiring, (NOT SERVICED) (Not Serviced)
2	00AT M10	19				EN0			FUSE, Mini, 10 AMP, Red
3	00AT M15	6				EN0			FUSE, Mini, 15 AMP, Light Blue
4	00AT M20	7				EN0			FUSE, Mini, 20 AMP, Yellow
5	00AT M25	AR							FUSE, Mini, 25 Amp, Natural
6	00AT M30	AR							FUSE, Mini, 30 AMP, Green
7	4671 168	1							RELAY, Mini
8	5600 6709	2				EN0			RELAY, Mini
9	6102 075AA	AR							FUSE CARTRIDGE, 20 Amp
10	6102 076AA	AR							FUSE CARTRIDGE, 30 Amp
11	6102 077AA	AR							FUSE CARTRIDGE, 40 Amp
12	6102 078AA	AR							FUSE CARTRIDGE, 50 Amp
-13	5170 021AA-	1				EN0			COVER, Power Distribution Center
-14									BRACKET, Wiring
	56010 275AB-	1	U						
	56010 291AB-	1	J, T						

2006 Liberty (KJ)

SERIES	LINE	BODY	ENGINE	TRANSMISSION
H =HIGHLINE	T =JEEP - 2WD	74 =SPORT UTILITY 4-DR	EKG=3.7L V6 Eng.	DG6=4-Spd. Auto. 42RLE Trans.
M =MEDIUM	J =JEEP - 4WD		ENR=2.8L 4 Cyl Turbo Diesel Eng.	DGV=4-Spd. Auto. VLP Trans.
P =PREMIUM	U =JEEP - 4WD (RHD)		ENJ=2.5L 4 Cyl 16V Turbo Diesel Eng.	DGQ=5-Spd Auto. 5-45RFE Trans.
			ED1=2.4L 4 Cyl DOHC 16v SMPI Eng.	DEH=6-Speed Man. NSG370 Trans.
				DDD=5-Speed HD Man. Trans.
				DDK=5-Speed HD Man. Trans.

Junction Block, Relays, Circuit Breaker
Figure 008-515

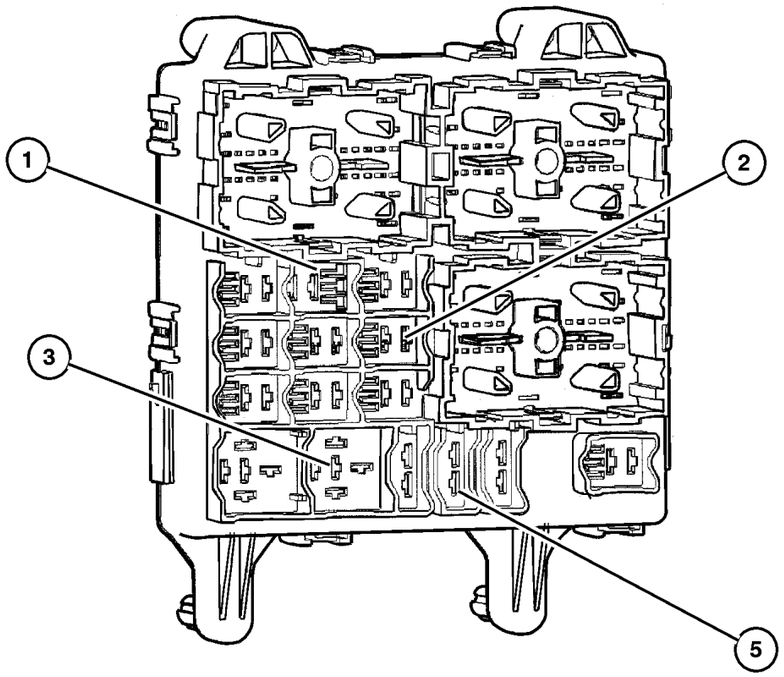

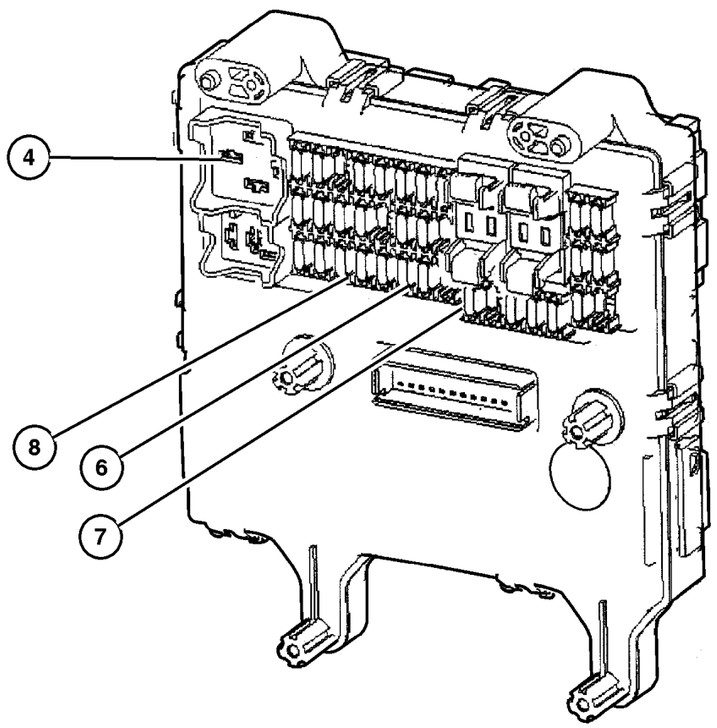

ITEM	PART NUMBER	QTY	LINE	SERIES	BODY	ENGINE	TRANS	TRIM	DESCRIPTION
1	56010 436AE	1							JUNCTION BLOCK, Relay
2	4671 168	1							RELAY, Mini, High Beam, Door Locks, Foglamp
3	5600 6709	2							RELAY, Mini
4	56042 216AB	1							RELAY
5	5600 7290	1							BREAKER, Circuit, 18 AMP
6	00AT M10	19							FUSE, Mini, 10 AMP, Red
7	00AT M15	6							FUSE, Mini, 15 AMP, Light Blue
8	00AT M20	7							FUSE, Mini, 20 AMP, Yellow
-9									PULLER, Fuse
	5072 937AA-	1	U						
		1	J, T						
-10									BRACKET, Junction Block
	56009 986AB-	1							
	56010 333AD-	1	J, T						
	56010 334AD-	1	U						

2006 Liberty (KJ)

SERIES	LINE	BODY	ENGINE	TRANSMISSION
H =HIGHLINE	T =JEEP - 2WD	74 =SPORT UTILITY 4-DR	EKG=3.7L V6 Eng.	DG6=4-Spd. Auto. 42RLE Trans.
M =MEDIUM	J =JEEP - 4WD		ENR=2.8L 4 Cyl Turbo Diesel Eng.	DGV=4-Spd. Auto. VLP Trans.
P =PREMIUM	U =JEEP - 4WD (RHD)		ENJ=2.5L 4 Cyl 16V Turbo Diesel Eng.	DGQ=5-Spd Auto. 5-45RFE Trans.
			ED1=2.4L 4 Cyl DOHC 16v SMPI Eng.	DEH=6-Speed Man. NSG370 Trans.
				DDD=5-Speed HD Man. Trans.
				DDK=5-Speed HD Man. Trans.

Sensors, Engine (3.7L EK0]
Figure 008-610

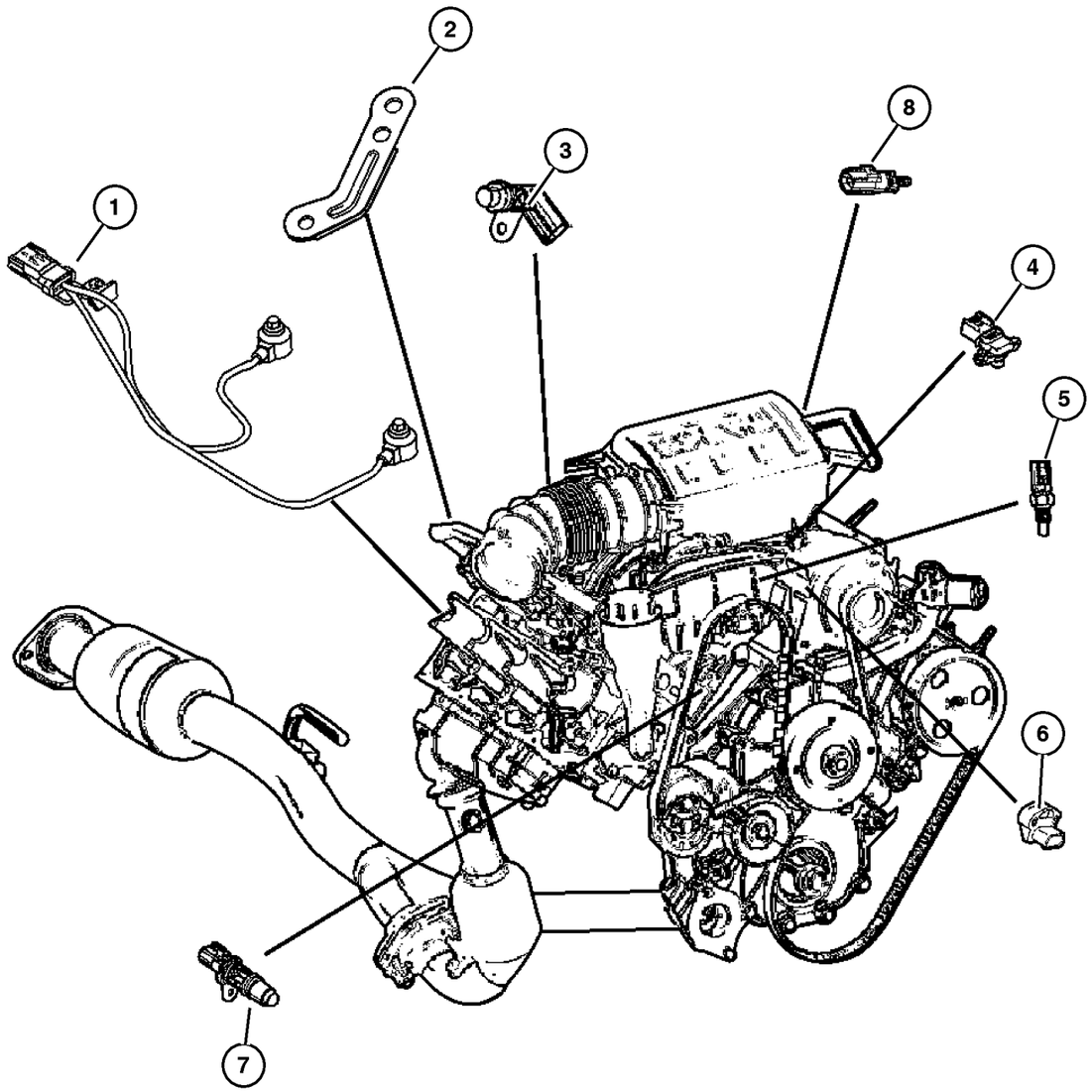

ITEM	PART NUMBER	QTY	LINE	SERIES	BODY	ENGINE	TRANS	TRIM	DESCRIPTION
Notes:									
[EK0]=3.7L V6 Engine									
1	56041 679AC	1				EK0			SENSOR, Knock
2	56041 849AA	1				EK0			BRACKET, Knock Sensor
3	56044 180AB	1				EK0			SENSOR, Crankshaft Position
4	56041 018AD	1				EK0			SENSOR, Map
5	5602 7873	1				EK0			SENSOR, Coolant Temperature
6	5019 411AC	1				EK0			SENSOR KIT, Throttle Position
7	56041 584AE	1				EK0			SENSOR, Camshaft
8	4606 487AB	1				EK0			SENSOR, Charge Air Temp

2006 Liberty (KJ)

SERIES	LINE	BODY	ENGINE	TRANSMISSION
H =HIGHLINE	T =JEEP - 2WD	74 =SPORT UTILITY 4-DR	EKG=3.7L V6 Eng.	DG6=4-Spd. Auto. 42RLE Trans.
M =MEDIUM	J =JEEP - 4WD		ENR=2.8L 4 Cyl Turbo Diesel Eng.	DGV=4-Spd. Auto. VLP Trans.
P =PREMIUM	U =JEEP - 4WD (RHD)		ENJ=2.5L 4 Cyl 16V Turbo Diesel Eng.	DGQ=5-Spd Auto. 5-45RFE Trans.
			ED1=2.4L 4 Cyl DOHC 16v SMPI Eng.	DEH=6-Speed Man. NSG370 Trans.
				DDD=5-Speed HD Man. Trans.
				DDK=5-Speed HD Man. Trans.

Sensors, Engine (2.8L EN0]
Figure 008-615

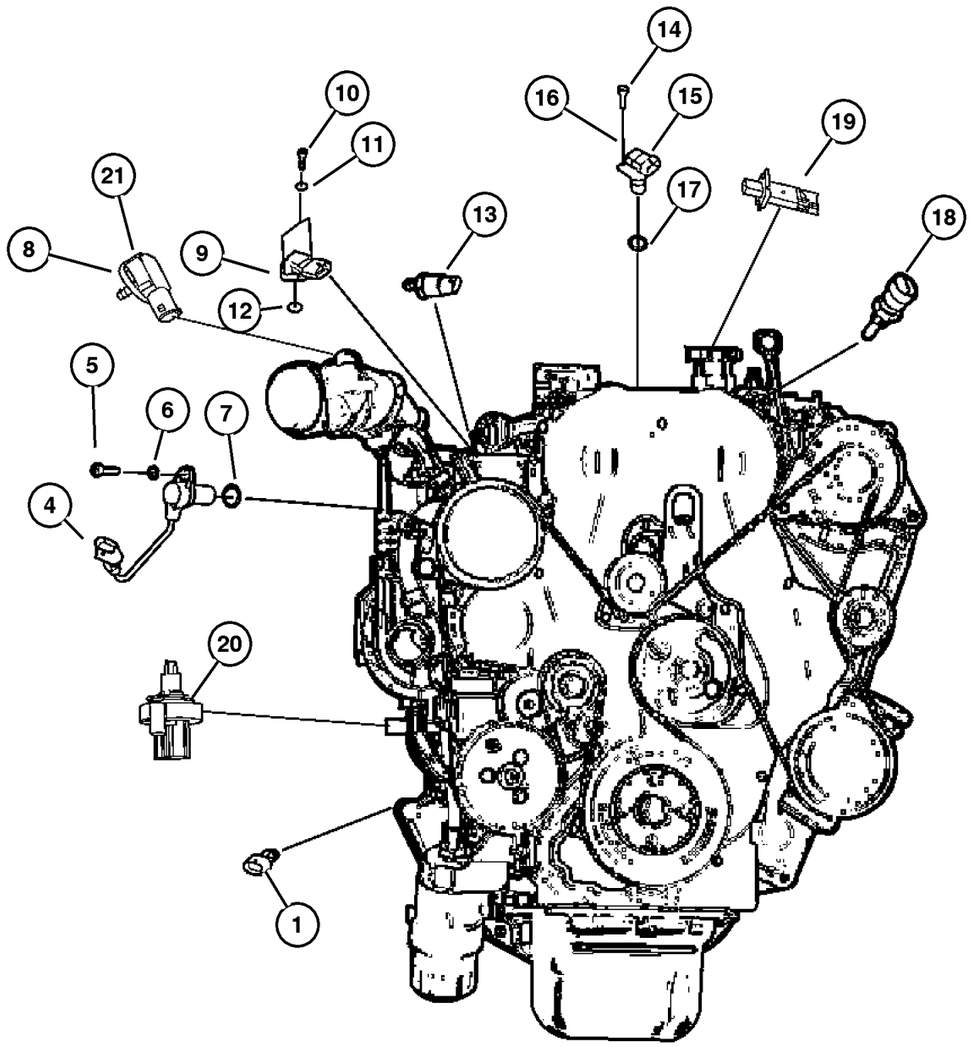

ITEM	PART NUMBER	QTY	LINE	SERIES	BODY	ENGINE	TRANS	TRIM	DESCRIPTION
Notes:									
[EN0]=All 4/5 Cylinder Turbo Diesel Engines									
[DBB]=All Manual Transmissions									
[DG0]=All Automatic Transmissions									
1									SENDING UNIT, Oil Pressure
	56028 807AB	1				EN0	DG0		
		1				EN0	DBB		
-2	4801 326AA-	1				EN0			BRACKET, Wiring, Wiring oil pressure sensor
-3	56041 379AA-	2				EN0			CLIP, Housing, Wiring oil pressure sensor
4									SENSOR, Crankshaft
	5066 882AA	1				EN0	DG0		
		1				EN0	DBB		
5									BOLT, M6x10
	5003 551AA	1				EN0	DG0		
		1				EN0	DBB		
6									WASHER, Implement Attaching
	4723 204	1				EN0	DG0		
		1				EN0	DBB		
7									O RING
	5066 860AA	1				EN0	DG0		
		1				EN0	DBB		
8									SENSOR PACKAGE, Air Flow Meter, (NOT REQUIRED)
9									SENSOR, Air Temperature
	5140 331AA	1				EN0	DG0		
		1				EN0	DBB		
10									SCREW
	5010 858AA	1				EN0	DG0		
		1				EN0	DBB		
11									WASHER, Implement Attaching
	4723 204	1				EN0	DG0		
		1				EN0	DBB		
12									O RING
	5066 860AA	1				EN0	DG0		
		1				EN0	DBB		
13									SENSOR, Fuel Pressure
	5159 960AA	1				EN0	DG0		
	5159 964AA	1				EN0	DG0		Export
	5159 963AA	1				EN0	DBB		
14									SCREW

2006 Liberty (KJ)

SERIES	LINE	BODY	ENGINE	TRANSMISSION
H =HIGHLINE	T =JEEP - 2WD	74 =SPORT UTILITY 4-DR	EKG=3.7L V6 Eng.	DG6=4-Spd. Auto. 42RLE Trans.
M =MEDIUM	J =JEEP - 4WD		ENR=2.8L 4 Cyl Turbo Diesel Eng.	DGV=4-Spd. Auto. VLP Trans.
P =PREMIUM	U =JEEP - 4WD (RHD)		ENJ=2.5L 4 Cyl 16V Turbo Diesel Eng.	DGQ=5-Spd Auto. 5-45RFE Trans.
			ED1=2.4L 4 Cyl DOHC 16v SMPI Eng.	DEH=6-Speed Man. NSG370 Trans.
				DDD=5-Speed HD Man. Trans.
				DDK=5-Speed HD Man. Trans.

Sensors, Engine (2.8L EN0]
Figure 008-615

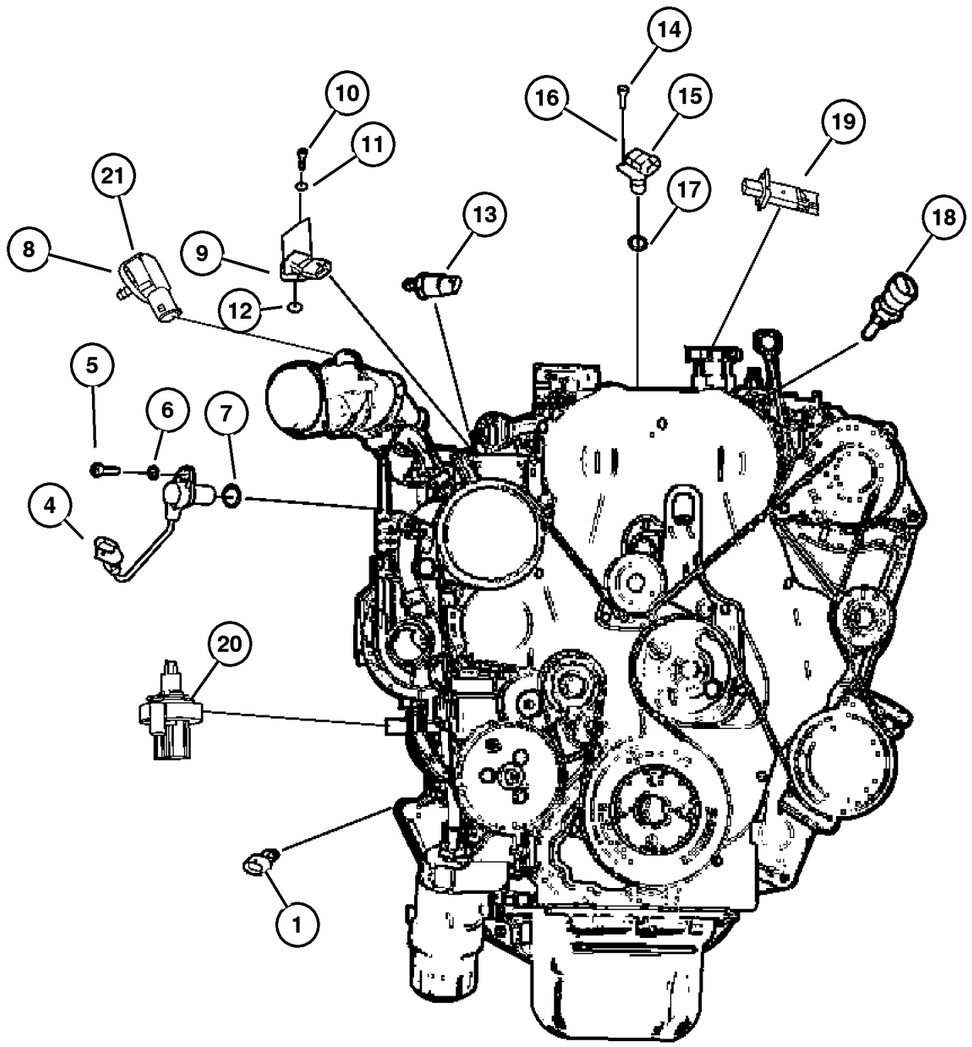

ITEM	PART NUMBER	QTY	LINE	SERIES	BODY	ENGINE	TRANS	TRIM	DESCRIPTION
	5010 858AA	1				EN0	DG0		
		1				EN0	DBB		
15									SENSOR, Camshaft
	5140 332AA	1				EN0	DG0		
		1				EN0	DBB		
16									WASHER, Implement Attaching
	4723 204	1				EN0	DG0		
		1				EN0	DBB		
17									O RING
	5066 860AA	1				EN0	DG0		
		1				EN0	DBB		
18									SENSOR, Temperature Sending Unit
	5066 779AA	1				EN0	DG0		
		1				EN0	DBB		
19	53013 733AB	1				EN0			SENSOR, Air Flow
20	5143 002AA	1				EN0			SENSOR, Fuel/Water
21	56044 591AA	1				EN0			SENSOR, Air Pressure

2006 Liberty (KJ)

SERIES	LINE	BODY	ENGINE	TRANSMISSION
H =HIGHLINE	T =JEEP - 2WD	74 =SPORT UTILITY 4-DR	EKG=3.7L V6 Eng.	DG6=4-Spd. Auto. 42RLE Trans.
M =MEDIUM	J =JEEP - 4WD		ENR=2.8L 4 Cyl Turbo Diesel Eng.	DGV=4-Spd. Auto. VLP Trans.
P =PREMIUM	U =JEEP - 4WD (RHD)		ENJ=2.5L 4 Cyl 16V Turbo Diesel Eng.	DGQ=5-Spd Auto. 5-45RFE Trans.
			ED1=2.4L 4 Cyl DOHC 16v SMPI Eng.	DEH=6-Speed Man. NSG370 Trans.
				DDD=5-Speed HD Man. Trans.
				DDK=5-Speed HD Man. Trans.

Sensors, Oxygen [3.7L EK0]
Figure 008-625

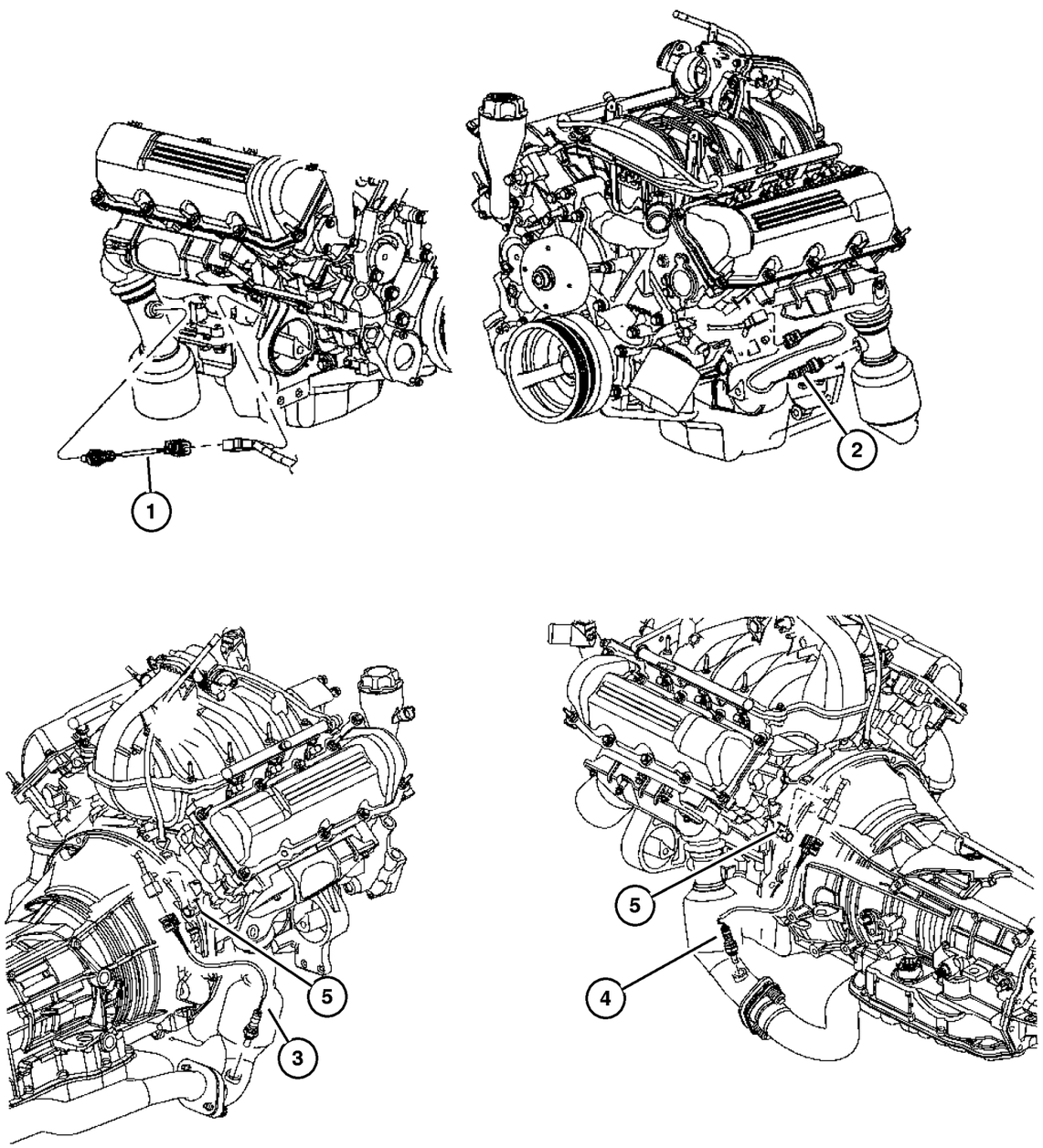

ITEM	PART NUMBER	QTY	LINE	SERIES	BODY	ENGINE	TRANS	TRIM	DESCRIPTION
1	56028 994AB	1				EK0			SENSOR, Oxygen, Before catalyst, Right
2	56028 994AB	1				EK0			SENSOR, Oxygen, Before catalyst, Left
3	56029 049AA	1				EK0			SENSOR, Oxygen, After catalyst, Right
4	56029 049AA	1				EK0			SENSOR, Oxygen, After catalyst, Left
5									BRACKET, Oxygen Sensor
	56041 823AB	1				EK0	DG0		
		2				EK0	DBB		

2006 Liberty (KJ)

SERIES	LINE	BODY	ENGINE	TRANSMISSION
H =HIGHLINE	T =JEEP - 2WD	74 =SPORT UTILITY 4-DR	EKG=3.7L V6 Eng.	DG6=4-Spd. Auto. 42RLE Trans.
M =MEDIUM	J =JEEP - 4WD		ENR=2.8L 4 Cyl Turbo Diesel Eng.	DGV=4-Spd. Auto. VLP Trans.
P =PREMIUM	U =JEEP - 4WD (RHD)		ENJ=2.5L 4 Cyl 16V Turbo Diesel Eng.	DGQ=5-Spd Auto. 5-45RFE Trans.
			ED1=2.4L 4 Cyl DOHC 16v SMPI Eng.	DEH=6-Speed Man. NSG370 Trans.
				DDD=5-Speed HD Man. Trans.
				DDK=5-Speed HD Man. Trans.

Sensor (Drive Train)
Figure 008-635

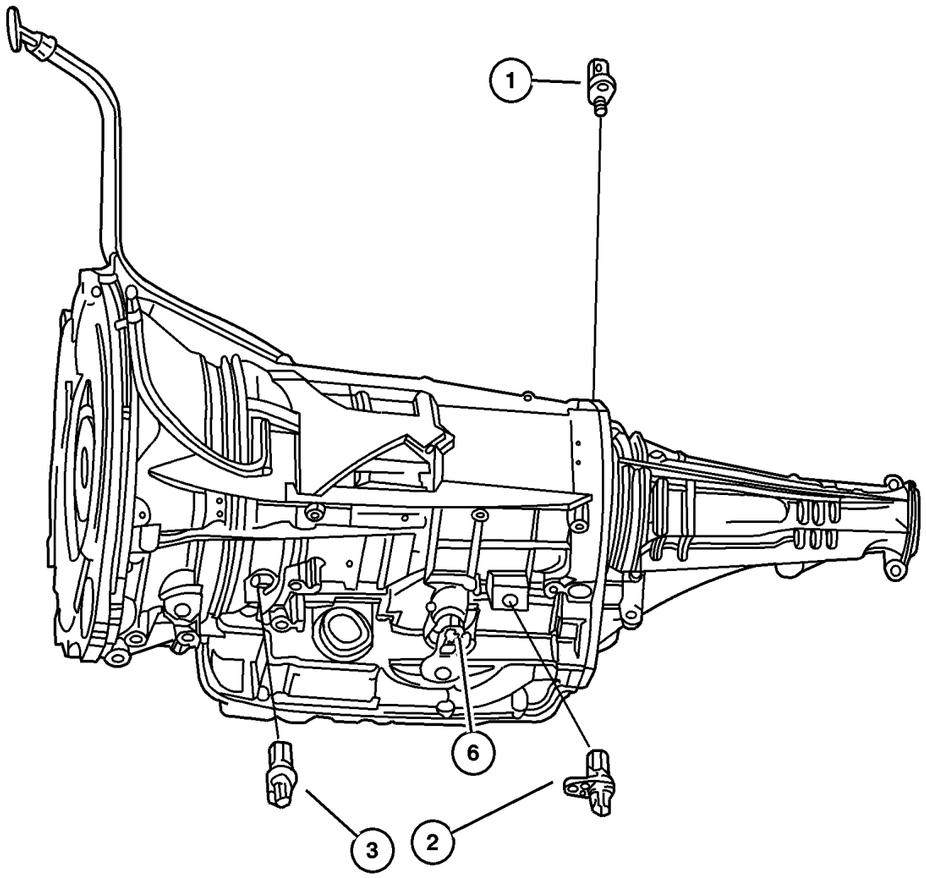

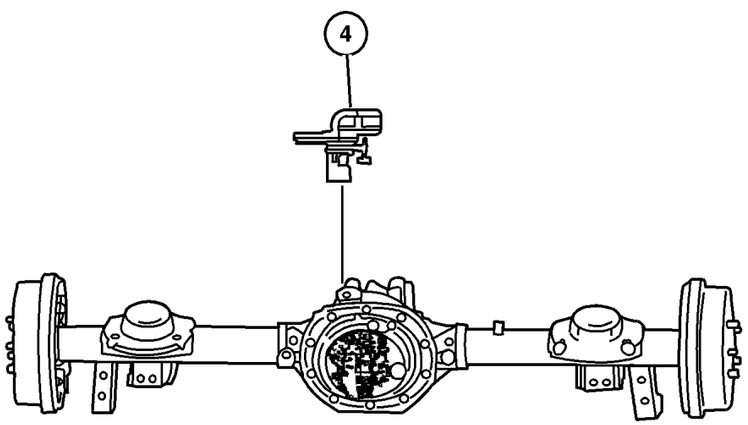

ITEM	PART NUMBER	QTY	LINE	SERIES	BODY	ENGINE	TRANS	TRIM	DESCRIPTION
Notes:									
[DGQ] = 5 Speed Automatic Transmission									
[DG4]= Multi-Speed Automatic Transmission									
[DG6] = 4 Speed Automatic Transmission									
[ED0] = 2.4L Engine									
[EK0] = 3.7L Engine									
[EN0] = 2.5L Turbo Diesel Engine									
1	4799 758	1	J, U			EN0	DGQ		TRANSDUCER, Pressure Sensor
2									SENSOR, Transmission Output Speed
	52854 001AA	1	J, U				DG6		
		1	T				DG6		
3									SENSOR, Transmission Input Speed
	4799 061AB	1	J, U				DG6		
		1	T				DG6		
4	52129 178AA	2							SENSOR, Wheel Speed
-5	5086 373AA-	1							O RING, Sensor
6									SENSOR, Manual Valve Lever
	4659 677AC	1	J, U				DG6		
		1	T				DG6		
		1	T				DGV		

2006 Liberty (KJ)

SERIES	LINE	BODY	ENGINE	TRANSMISSION
H =HIGHLINE	T =JEEP - 2WD	74 =SPORT UTILITY 4-DR	EKG=3.7L V6 Eng.	DG6=4-Spd. Auto. 42RLE Trans.
M =MEDIUM	J =JEEP - 4WD		ENR=2.8L 4 Cyl Turbo Diesel Eng.	DGV=4-Spd. Auto. VLP Trans.
P =PREMIUM	U =JEEP - 4WD (RHD)		ENJ=2.5L 4 Cyl 16V Turbo Diesel Eng.	DGQ=5-Spd Auto. 5-45RFE Trans.
			ED1=2.4L 4 Cyl DOHC 16v SMPI Eng.	DEH=6-Speed Man. NSG370 Trans.
				DDD=5-Speed HD Man. Trans.
				DDK=5-Speed HD Man. Trans.

Sensor (Body)
Figure 008-640

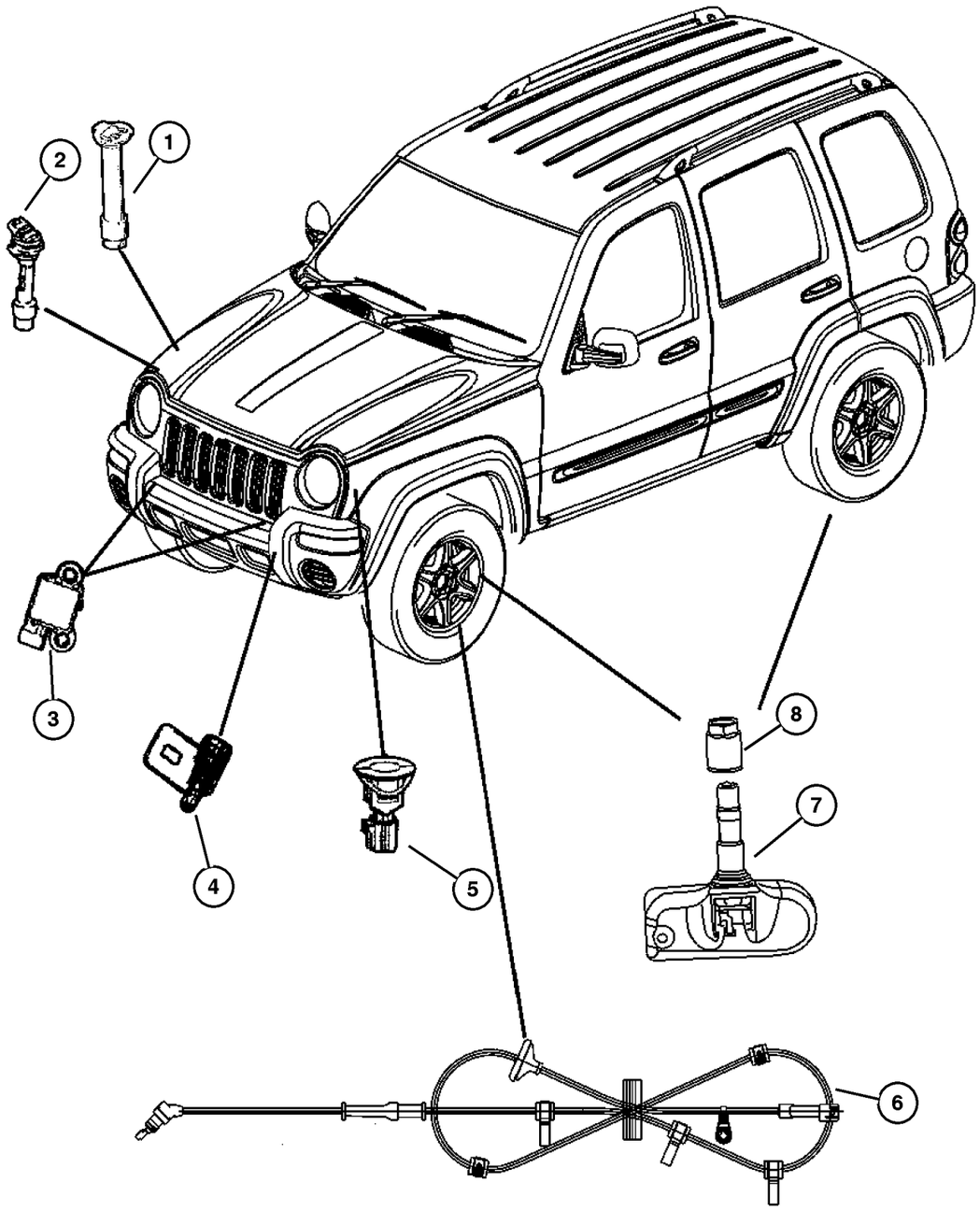

ITEM	PART NUMBER	QTY	LINE	SERIES	BODY	ENGINE	TRANS	TRIM	DESCRIPTION
1	5161 400AA	1							SENSOR, Washer Fluid Level
2									SENSOR, Coolant Level, Serviced in pressurized coolant bottle only, (NOT SERVICED) (Not Serviced)
3	5084 000AA	2							SENSOR, Air Bag
4									SENSOR, Ambient Temperature
	5604 2395	1	J	H, P		ED0, EK0			
		1	J	H, P		EN0			
		1	U	H, P		ED0, EK0			
		1	U	H, P		EN0			
		1	J	M					
		1	J, T	H, P					
		1	J, T	M					
5									SENSOR, Battery Temperature, (NOT REQUIRED)
6									SENSOR, Anti-Lock Brakes
	52128 694AE	1	J, T						Right
		1	J, U						Right
	52128 695AE	1	J, T						Left
		1	J, U						Left
7	56053 030AB	4							SENSOR, Tire Pressure, valve stem
8	56053 033AA	4							NUT, Tire Pressure Sensor

2006 Liberty (KJ)

SERIES	LINE	BODY	ENGINE	TRANSMISSION
H =HIGHLINE	T =JEEP - 2WD	74 =SPORT UTILITY 4-DR	EKG=3.7L V6 Eng.	DG6=4-Spd. Auto. 42RLE Trans.
M =MEDIUM	J =JEEP - 4WD		ENR=2.8L 4 Cyl Turbo Diesel Eng.	DGV=4-Spd. Auto. VLP Trans.
P =PREMIUM	U =JEEP - 4WD (RHD)		ENJ=2.5L 4 Cyl 16V Turbo Diesel Eng.	DGQ=5-Spd Auto. 5-45RFE Trans.
			ED1=2.4L 4 Cyl DOHC 16v SMPI Eng.	DEH=6-Speed Man. NSG370 Trans.
				DDD=5-Speed HD Man. Trans.
				DDK=5-Speed HD Man. Trans.

Powertrain Control Modules
Figure 008-705

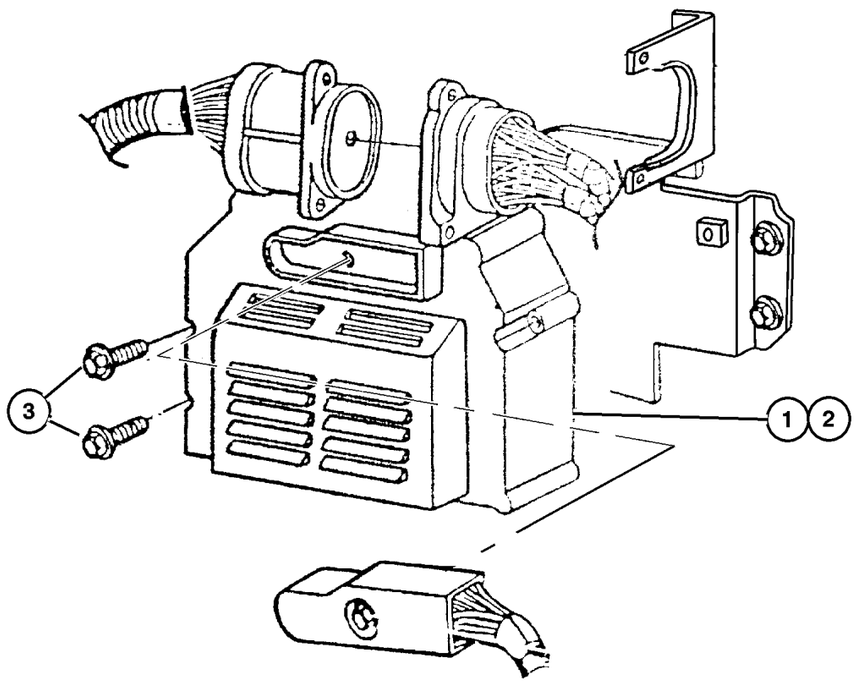

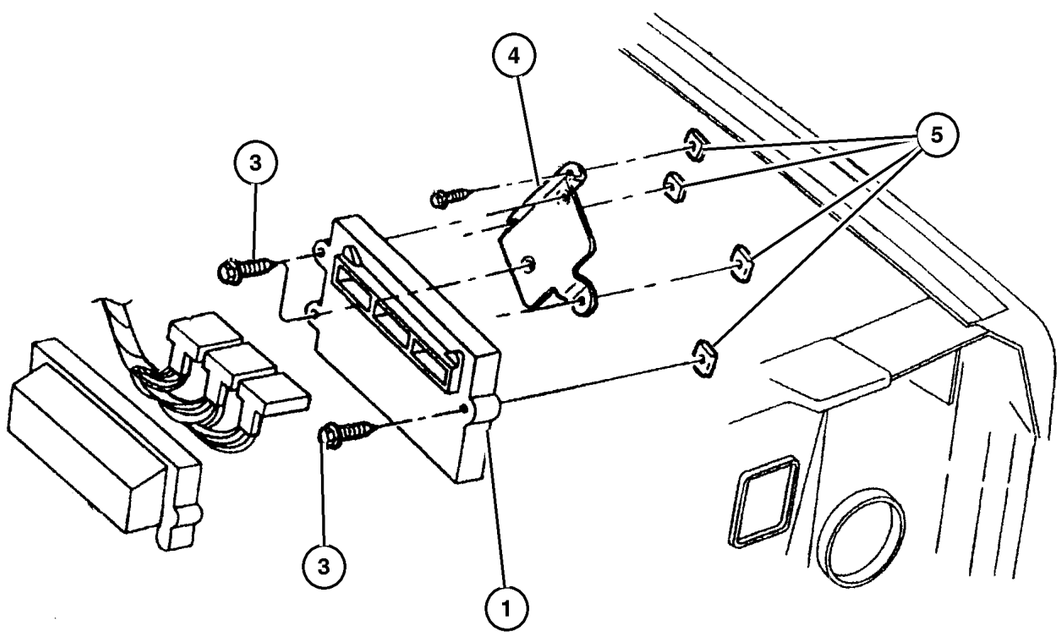

ITEM	PART NUMBER	QTY	LINE	SERIES	BODY	ENGINE	TRANS	TRIM	DESCRIPTION
1									MODULE, Powertrain Control, Generic
	5094 597AC	1				EK0	DG0		
	5094 598AC	1				EK0	DBB		
2									MODULE, Engine Controller
	56044 773AA	1	J, U			EN0	DEH		
	56044 775AA	1	J, U			EN0	DGQ		
	56044 776AB	1	J, T			EN0	DGQ		
3	6035 884	3				ED0, EK0			SCREW
4									BRACKET, Control Unit
	56041 384AD	1				EN0			
	56044 353AA	1				ED0, EK0			
5									NUT, Hex Flange Lock, M5, M5x0.80, (NOT SERVICED) (Not Serviced)

2006 Liberty (KJ)

SERIES	LINE	BODY	ENGINE	TRANSMISSION
H =HIGHLINE	T =JEEP - 2WD	74 =SPORT UTILITY 4-DR	EKG=3.7L V6 Eng.	DG6=4-Spd. Auto. 42RLE Trans.
M =MEDIUM	J =JEEP - 4WD		ENR=2.8L 4 Cyl Turbo Diesel Eng.	DGV=4-Spd. Auto. VLP Trans.
P =PREMIUM	U =JEEP - 4WD (RHD)		ENJ=2.5L 4 Cyl 16V Turbo Diesel Eng.	DGQ=5-Spd Auto. 5-45RFE Trans.
			ED1=2.4L 4 Cyl DOHC 16v SMPI Eng.	DEH=6-Speed Man. NSG370 Trans.
				DDD=5-Speed HD Man. Trans.
				DDK=5-Speed HD Man. Trans.

Switches (Instrument Panel and Console)
Figure 008-810

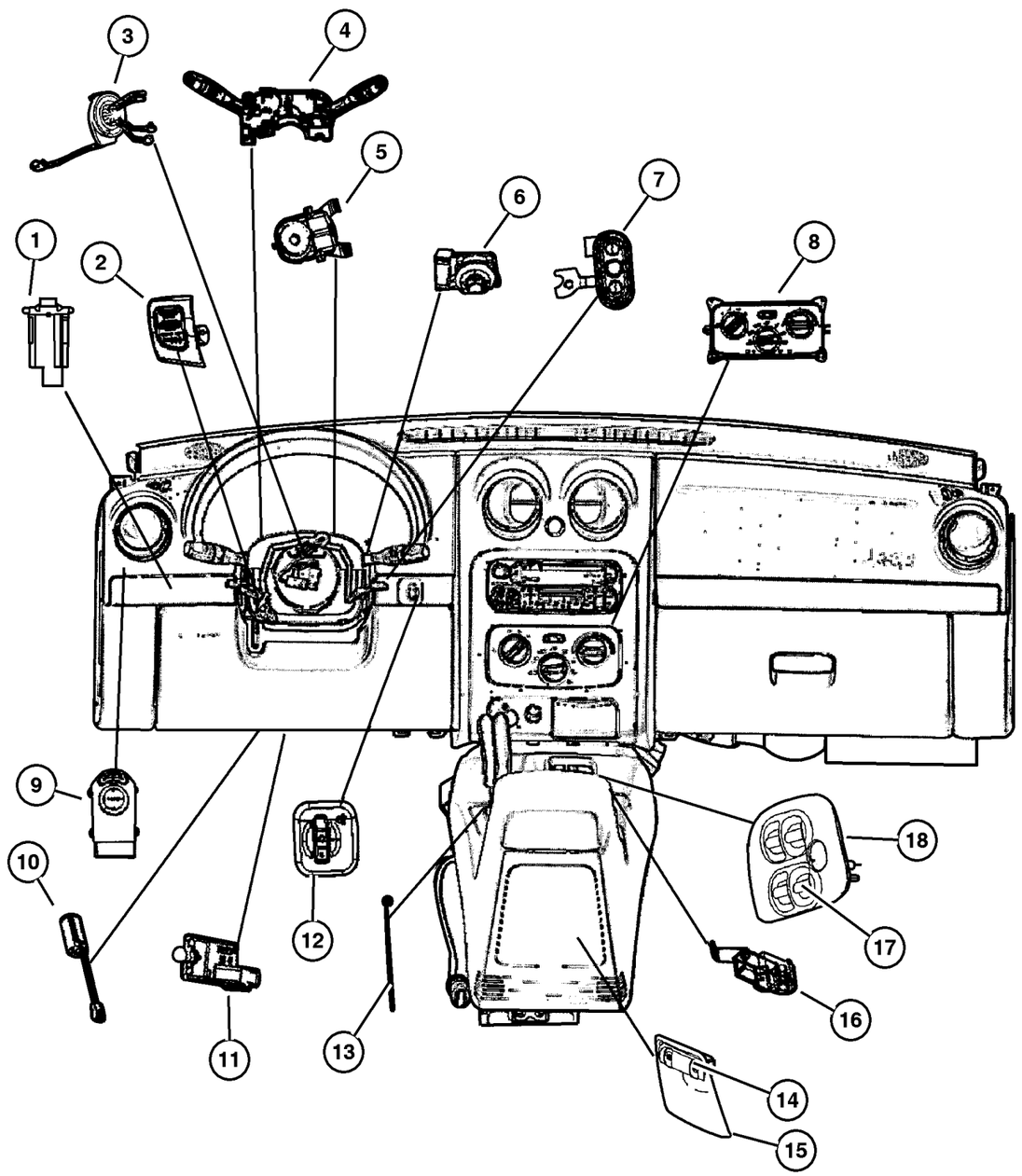

ITEM	PART NUMBER	QTY	LINE	SERIES	BODY	ENGINE	TRANS	TRIM	DESCRIPTION
Notes:									
[ED0] = 2.4L 4 Cylinder Engine									
[EK0]=3.7L V6 Engine									
[EKG] = 3.7L V6 'Magnum' Engine									
[EN0]=4/5 Cylinder Turbo Diesel Engine									
[DBB]=All Manual Transmissions									
[DG0]=All Automatic Transmissions									
1	56010 417AC	1							SWITCH, Off Road Lamp
2									SWITCH, Speed Control
	1AZ50 1DHAB	1		M					[D5], Right
		1		M					[DB], Right
	1AZ50 1J8AB	1		M					[J1], Right
		1		M					[J3], Right
	1AZ50 DX9AB	1		H					Right
	1AZ51 1DHAB	1		M					[D5], Left
		1		M					[DB], Left
	1AZ51 1J8AB	1		M					[J1], Left
		1		M					[J3], Left
	1AZ51 DX9AB	1		H					Left
	56010 686AA	1		P					Right
	56010 687AA	1		P					Left
3									CLOCKSPRING
	56010 619AC	1							[BNB]
	56044 886AC	1							
4									SWITCH, Multifunction
	56010 126AG	1							With Foglamp
	56010 132AG	1							Without Foglamp (Export)
	56010 133AG	1							With Foglamp (Export)
5	56010 158AD	1							SWITCH, Hazard Warning, and Flasher
6									SWITCH, Ignition
	4793 576AB	1				DG0			
		1				DBB			
7									SWITCH, Remote Radio
	56042 312AB	1		H					Right
		1		M					Right
		1		P					Right
	56042 313AB	1		H					Left
		1		M					Left
		1		P					Left
8	55037 533AG	1							CONTROL, A/C And Heater
9									SWITCH, Mirror

2006 Liberty (KJ)

SERIES	LINE	BODY	ENGINE	TRANSMISSION
H =HIGHLINE	T =JEEP - 2WD	74 =SPORT UTILITY 4-DR	EKG=3.7L V6 Eng.	DG6=4-Spd. Auto. 42RLE Trans.
M =MEDIUM	J =JEEP - 4WD		ENR=2.8L 4 Cyl Turbo Diesel Eng.	DGV=4-Spd. Auto. VLP Trans.
P =PREMIUM	U =JEEP - 4WD (RHD)		ENJ=2.5L 4 Cyl 16V Turbo Diesel Eng.	DGQ=5-Spd Auto. 5-45RFE Trans.
			ED1=2.4L 4 Cyl DOHC 16v SMPI Eng.	DEH=6-Speed Man. NSG370 Trans.
				DDD=5-Speed HD Man. Trans.
				DDK=5-Speed HD Man. Trans.

Switches (Instrument Panel and Console)
Figure 008-810

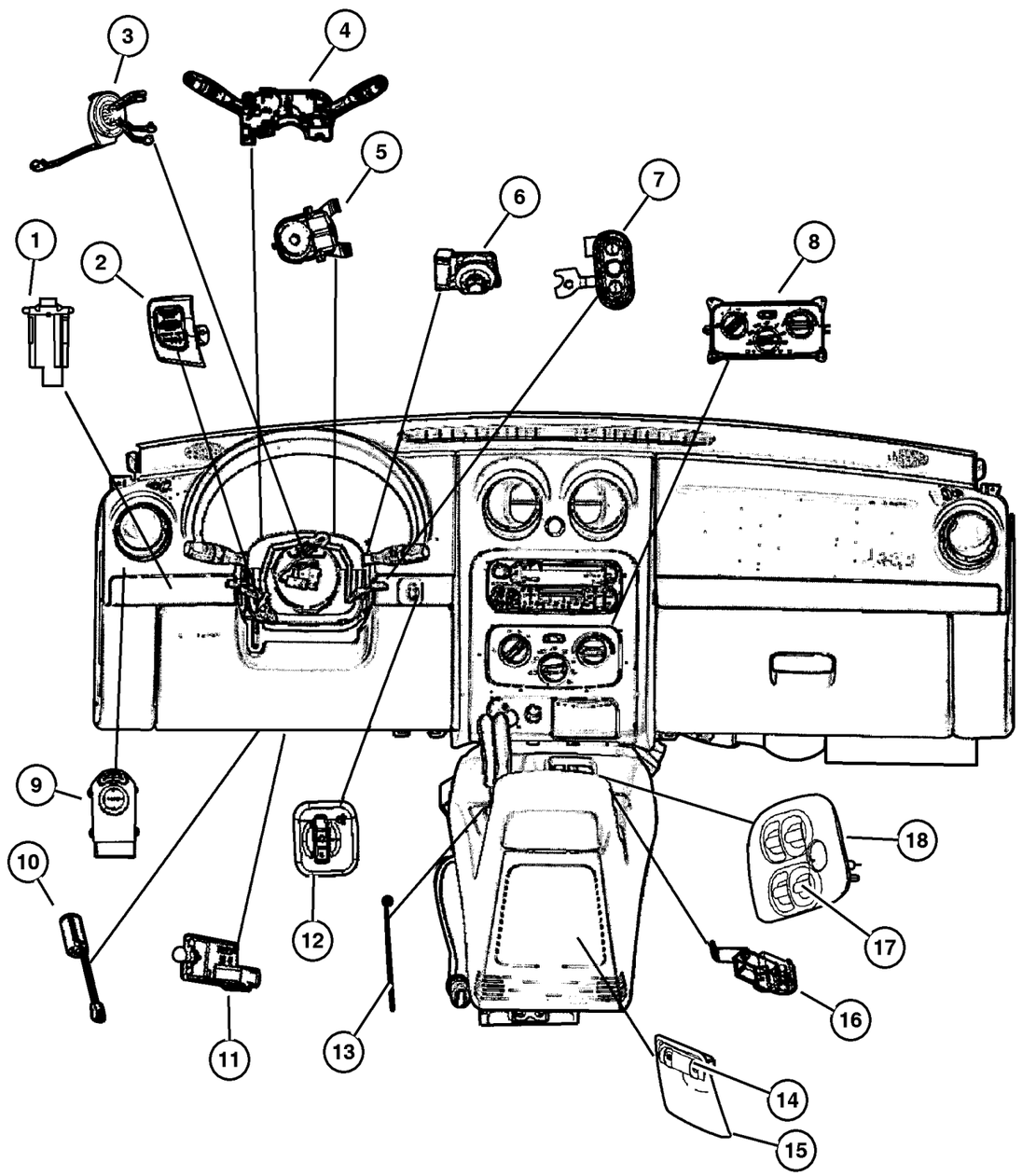

ITEM	PART NUMBER	QTY	LINE	SERIES	BODY	ENGINE	TRANS	TRIM	DESCRIPTION
	56010 696AA	1	J, T						
	56010 697AA	1	U						
10									SWITCH, Clutch Starter Interlock
	56010 692AA	1	U				DBB		
		1	J, T			EK0	DBB		
		1	J, T			ED0, EN0	DBB		
11	5083 344AA	1							SWITCH PACKAGE, Stop Lamp
12	56010 204AE	1							SWITCH, Headlamp Leveling
13									SWITCH, Overdrive Lockout, Serviced in Shifter Assembly, (NOT SERVICED) (Not Serviced)
14	56010 091AB	1							SWITCH, Power Window
15									BEZEL, Power Window Switch
	WA64 XDHAB	1							[D5]
		1							[DB]
	WA64 ZJ8AB	1							[J1]
		1							[J3]
16									SWITCH, Parking Brake
	5209 922	1					DG0		
	5212 7960	1					DEH		
17									SWITCH, Power Window
	56054 002AA	1					DBB		Master window switch
		1		H			DG0		Master window switch
		1		M			DG0		Master window switch
		1		P			DG0		Master window switch
18									BEZEL, Gear Selector
	5KC57 DX9AA	1		H			DG0		
	5KC58 AAAAA	1		M			DG0		
	5KC59 XZAAA	1		P			DG0		
	5KC69 DX9AA	1					DBB		
-19									SWITCH, Electronic Stability Program
	56044 850AB-	1		H			DG0		
		1		M, P			DG0		
		1		M, P			DBB		
		1		H			DBB		

2006 Liberty (KJ)

SERIES	LINE	BODY	ENGINE	TRANSMISSION
H =HIGHLINE	T =JEEP - 2WD	74 =SPORT UTILITY 4-DR	EKG=3.7L V6 Eng.	DG6=4-Spd. Auto. 42RLE Trans.
M =MEDIUM	J =JEEP - 4WD		ENR=2.8L 4 Cyl Turbo Diesel Eng.	DGV=4-Spd. Auto. VLP Trans.
P =PREMIUM	U =JEEP - 4WD (RHD)		ENJ=2.5L 4 Cyl 16V Turbo Diesel Eng.	DGQ=5-Spd Auto. 5-45RFE Trans.
			ED1=2.4L 4 Cyl DOHC 16v SMPI Eng.	DEH=6-Speed Man. NSG370 Trans.
				DDD=5-Speed HD Man. Trans.
				DDK=5-Speed HD Man. Trans.

Switches (Drive Train)
Figure 008-820

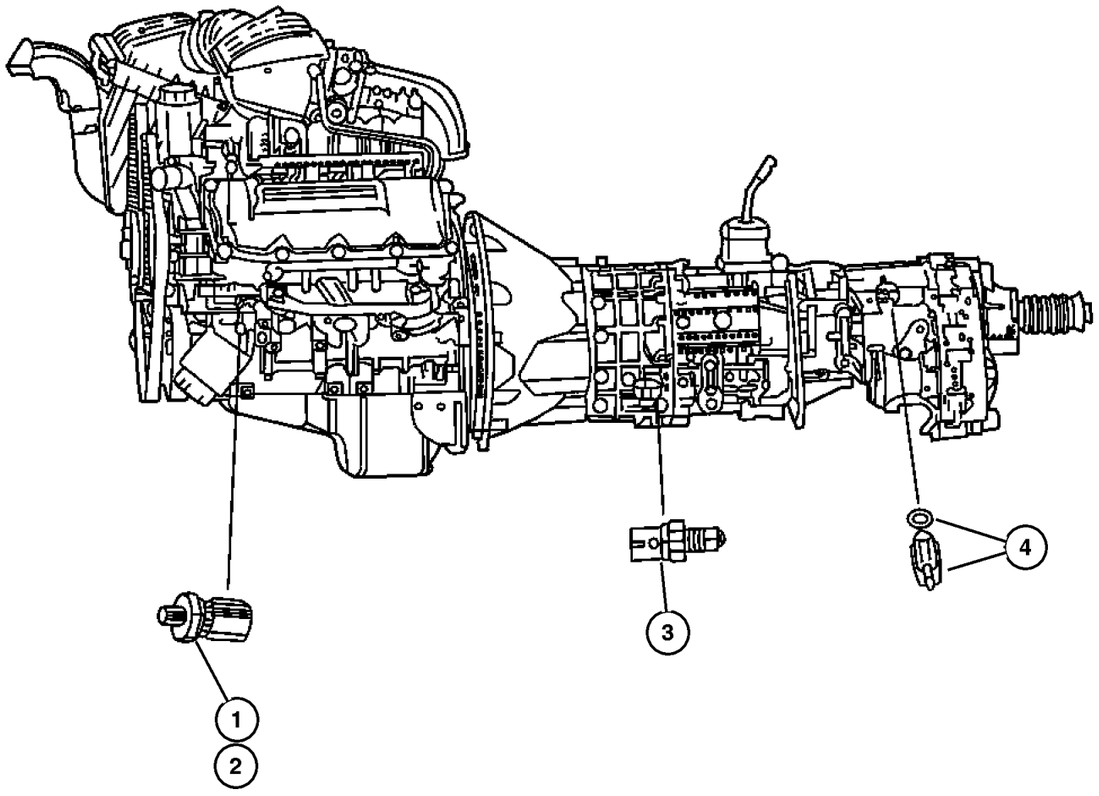

ITEM	PART NUMBER	QTY	LINE	SERIES	BODY	ENGINE	TRANS	TRIM	DESCRIPTION
Notes:									
[ED0] = 2.4L 4 Cylinder Engine									
[EK0] = 3.7L V6 Cylinder Engine									
[EKG] = 3.7L V6 'Magnum' Engine									
[EN0] = 2.5L Diesel									
[DBB] = All Manual Transmissions									
[DDD] = 5 Speed Manual Transmissions									
[DDk] = 5 Speed Manual Transmissions									
[DG0] = All Automatic Transmissions									
1									SENDING UNIT, Oil Pressure
	56028 807AB	1				EN0	DG0		
		1				EN0	DBB		
2	4868 672AA	1				EK0			SWITCH, Oil Pressure
3									SWITCH, Back Up Lamp
	5099 770AA	1	T			EK0	DEH		
		1	J, U			EN0	DEH		
		1	J, U			EK0	DEH		
		1	T			ED0	DEH		
		1	J, U			ED0	DEH		
4	5083 138AA	1	J, U						SWITCH, Transfer Case, 5 Position

2006 Liberty (KJ)

SERIES	LINE	BODY	ENGINE	TRANSMISSION
H =HIGHLINE	T =JEEP - 2WD	74 =SPORT UTILITY 4-DR	EKG=3.7L V6 Eng.	DG6=4-Spd. Auto. 42RLE Trans.
M =MEDIUM	J =JEEP - 4WD		ENR=2.8L 4 Cyl Turbo Diesel Eng.	DGV=4-Spd. Auto. VLP Trans.
P =PREMIUM	U =JEEP - 4WD (RHD)		ENJ=2.5L 4 Cyl 16V Turbo Diesel Eng.	DGQ=5-Spd Auto. 5-45RFE Trans.
			ED1=2.4L 4 Cyl DOHC 16v SMPI Eng.	DEH=6-Speed Man. NSG370 Trans.
				DDD=5-Speed HD Man. Trans.
				DDK=5-Speed HD Man. Trans.

Switches (Body)
Figure 008-830

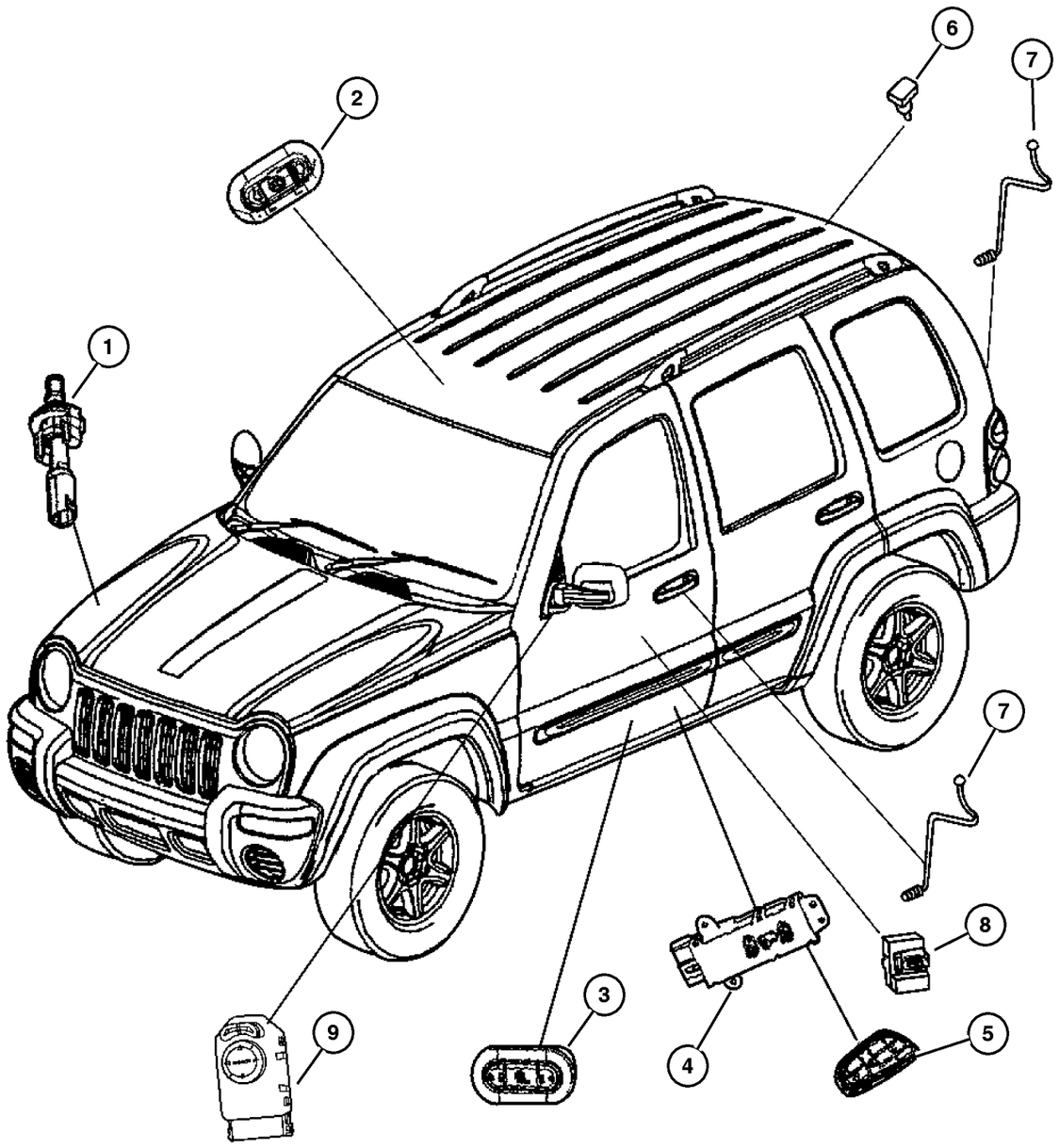

ITEM	PART NUMBER	QTY	LINE	SERIES	BODY	ENGINE	TRANS	TRIM	DESCRIPTION
1	4707 875AB	1							SWITCH, Underhood
2									SWITCH, Sunroof
	1BN48 BD1AA	1	J, T						[CUD]
		1	J, U						[CUD]
	4602 688AA	1	J, T						
		1	J, U						
3									SWITCH, Heated Seat
	5GW44 DX9AB	2	J, T						
		2	J, U						
4									SWITCH, Seat
	55352 782AA	1	J, T						[JPS]
		2	J, T						[JPT]
		2	J, U						[JPT]
5									KNOB, Power Seat Switch
	4607 042AB	1	J, T						Right
		1	J, U						Right
	4607 043AB	1	J, T						Left
		1	J, U						Left
6									SWITCH, Reading Lamp, Serviced in reading lamps assembly only, (NOT SERVICED) (Not Serviced)
7									SWITCH, Security Alarm, (NOT REQUIRED)
8	56010 695AA	2							SWITCH, Door Lock
9									SWITCH, Mirror
	56010 696AA	1	J, T						
	56010 697AA	1	U						

2006 Liberty (KJ)

SERIES	LINE	BODY	ENGINE	TRANSMISSION
H =HIGHLINE	T =JEEP - 2WD	74 =SPORT UTILITY 4-DR	EKG=3.7L V6 Eng.	DG6=4-Spd. Auto. 42RLE Trans.
M =MEDIUM	J =JEEP - 4WD		ENR=2.8L 4 Cyl Turbo Diesel Eng.	DGV=4-Spd. Auto. VLP Trans.
P =PREMIUM	U =JEEP - 4WD (RHD)		ENJ=2.5L 4 Cyl 16V Turbo Diesel Eng.	DGQ=5-Spd Auto. 5-45RFE Trans.
			ED1=2.4L 4 Cyl DOHC 16v SMPI Eng.	DEH=6-Speed Man. NSG370 Trans.
				DDD=5-Speed HD Man. Trans.
				DDK=5-Speed HD Man. Trans.

Horns
Figure 008-905

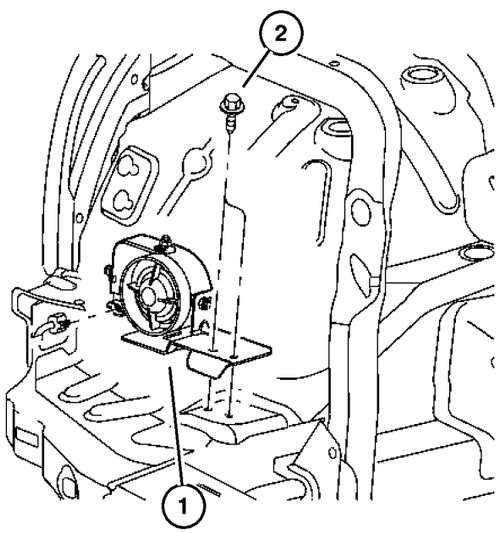

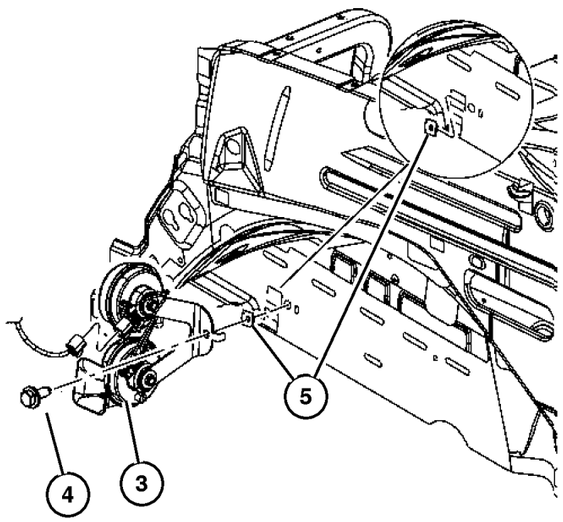

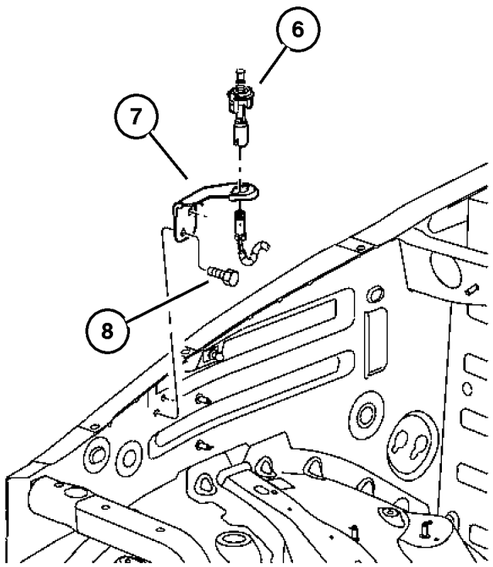

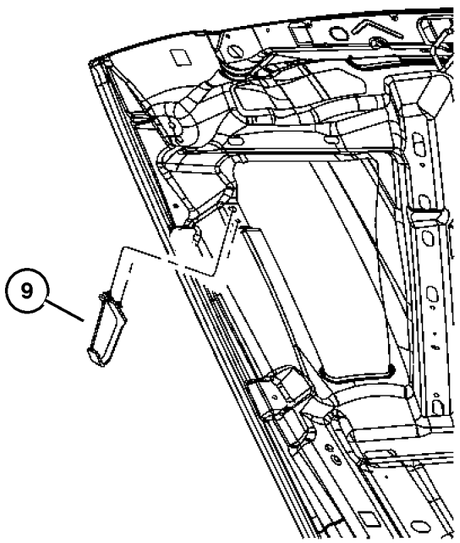

ITEM	PART NUMBER	QTY	LINE	SERIES	BODY	ENGINE	TRANS	TRIM	DESCRIPTION
1	56010 335AD	1							SIREN, Alarm
2	6505 638AA	2							SCREW, Siren attaching
3	56050 166AB	1							HORN AND BRACKET, Dual
4	6503 543	1							BOLT AND CONED WASHER, Hex Head, M8x1.25x25
5									NUT, U Type Multi Thread, M8 x 1. 25, (NOT SERVICED) (Not Serviced)
6	4707 875AB	1							SWITCH, Underhood
7	56010 290AB	1							BRACKET, Hood Ajar Disarm Switch
8	6505 638AA	2							SCREW, Hood switch bracket attaching
9	56010 147AE	1							PLATE, Striker

2006 Liberty (KJ)

SERIES	LINE	BODY	ENGINE	TRANSMISSION
H =HIGHLINE	T =JEEP - 2WD	74 =SPORT UTILITY 4-DR	EKG=3.7L V6 Eng.	DG6=4-Spd. Auto. 42RLE Trans.
M =MEDIUM	J =JEEP - 4WD		ENR=2.8L 4 Cyl Turbo Diesel Eng.	DGV=4-Spd. Auto. VLP Trans.
P =PREMIUM	U =JEEP - 4WD (RHD)		ENJ=2.5L 4 Cyl 16V Turbo Diesel Eng.	DGQ=5-Spd Auto. 5-45RFE Trans.
			ED1=2.4L 4 Cyl DOHC 16v SMPI Eng.	DEH=6-Speed Man. NSG370 Trans.
				DDD=5-Speed HD Man. Trans.
				DDK=5-Speed HD Man. Trans.

Battery Tray & Cables
Figure 008-1005

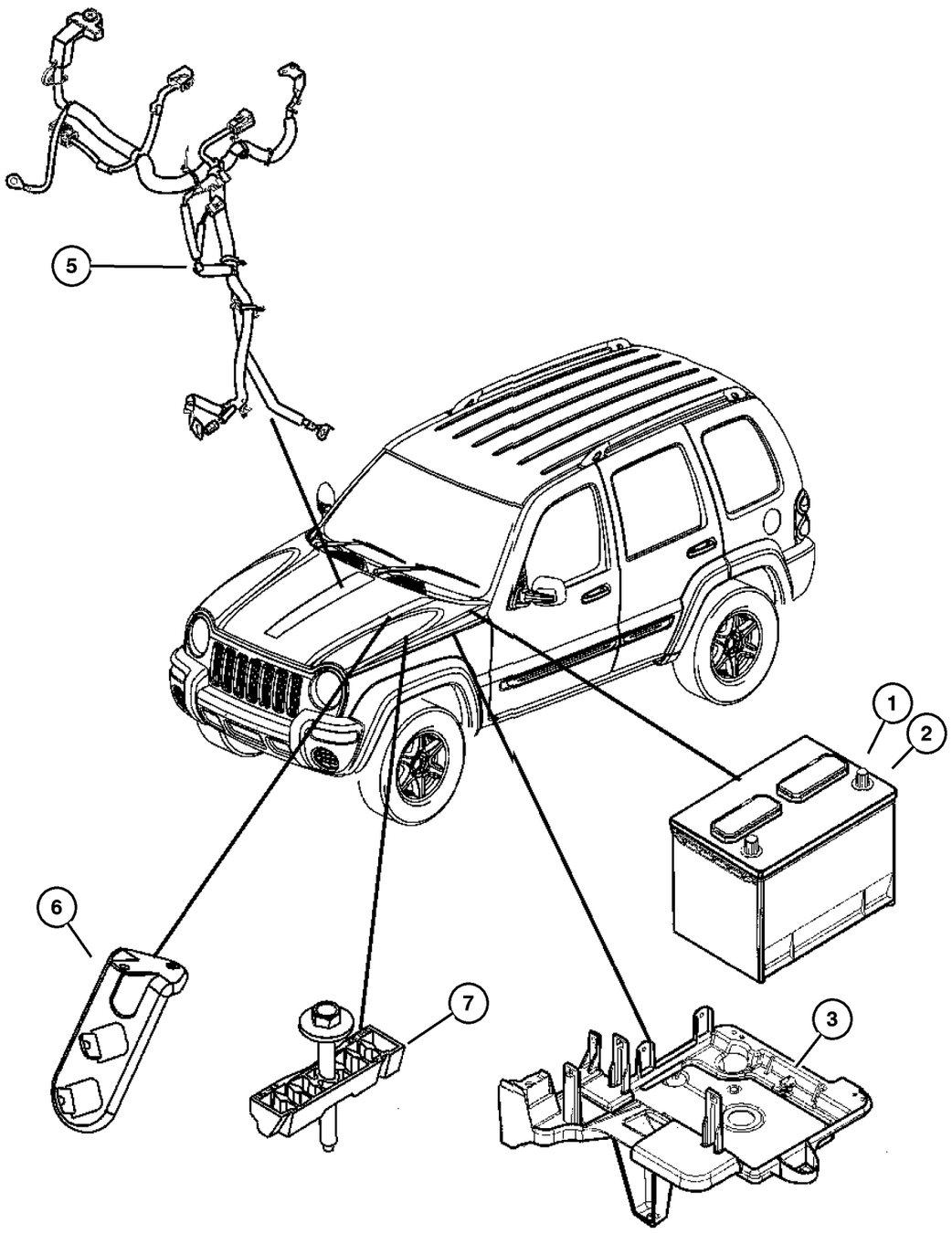

ITEM	PART NUMBER	QTY	LINE	SERIES	BODY	ENGINE	TRANS	TRIM	DESCRIPTION
Notes:									
[ED0] = 2.4L 4 Cylinder Engine									
[EK0] = 3.7L V6 Cylinder Engine									
[EN0] =All 4/5 Cylinder Turbo Diesel Engine									
1	4868 999AC	1				EN0			BATTERY, Storage
2	4609 365AE	1				EK0			BATTERY
3									SUPPORT, Battery
	55360 639AB	1				EK0			
	55360 654AB	1				EN0			
-4	6101 808	2							NUT, Hex, M6x1, Battery Wiring to PDC
5									WIRING, Alternator and Battery
	56050 300AG	1				EN0			
	56050 304AD	1		H, P		EK0			
	56050 306AE	1		M		EK0			
6									BRACKET, Wiring
	56010 275AB	1	U						
	56010 291AB	1	J, T						
7	55136 959AC	1							BRACKET, Battery Hold Down
-8	6503 102	3							NUT AND WASHER, Hex Nut-Coned Washer, M6 x 1.00, Battery tray to wheel house
-9	56050 594AA-	1				EN0			BRACKET, Battery Wiring

2006 Liberty (KJ)

SERIES	LINE	BODY	ENGINE	TRANSMISSION
H =HIGHLINE	T =JEEP - 2WD	74 =SPORT UTILITY 4-DR	EKG=3.7L V6 Eng.	DG6=4-Spd. Auto. 42RLE Trans.
M =MEDIUM	J =JEEP - 4WD		ENR=2.8L 4 Cyl Turbo Diesel Eng.	DGV=4-Spd. Auto. VLP Trans.
P =PREMIUM	U =JEEP - 4WD (RHD)		ENJ=2.5L 4 Cyl 16V Turbo Diesel Eng.	DGQ=5-Spd Auto. 5-45RFE Trans.
			ED1=2.4L 4 Cyl DOHC 16v SMPI Eng.	DEH=6-Speed Man. NSG370 Trans.
				DDD=5-Speed HD Man. Trans.
				DDK=5-Speed HD Man. Trans.

Engine Block Heaters
Figure 008-1010

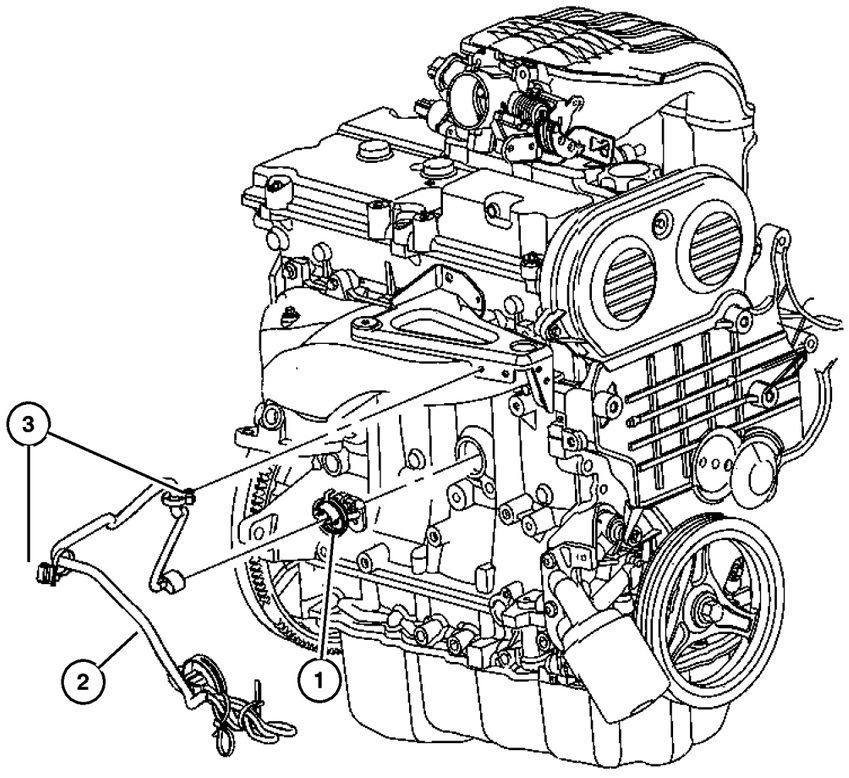

ITEM	PART NUMBER	QTY	LINE	SERIES	BODY	ENGINE	TRANS	TRIM	DESCRIPTION
1									HEATER, Engine
	55037 539AA	1				EN0	DG0		
	56041 304AB	1				EK0			
2									CORD, Engine Block Heater
	56041 974AA	1				EK0			
	56044 765AA	1				EN0	DG0		
3	4641 780	1							STRAP, Tie

2006 Liberty (KJ)

SERIES	LINE	BODY	ENGINE	TRANSMISSION
H =HIGHLINE	T =JEEP - 2WD	74 =SPORT UTILITY 4-DR	EKG=3.7L V6 Eng.	DG6=4-Spd. Auto. 42RLE Trans.
M =MEDIUM	J =JEEP - 4WD		ENR=2.8L 4 Cyl Turbo Diesel Eng.	DGV=4-Spd. Auto. VLP Trans.
P =PREMIUM	U =JEEP - 4WD (RHD)		ENJ=2.5L 4 Cyl 16V Turbo Diesel Eng.	DGQ=5-Spd Auto. 5-45RFE Trans.
			ED1=2.4L 4 Cyl DOHC 16v SMPI Eng.	DEH=6-Speed Man. NSG370 Trans.
				DDD=5-Speed HD Man. Trans.
				DDK=5-Speed HD Man. Trans.

Lamp, Front
Figure 008-1105

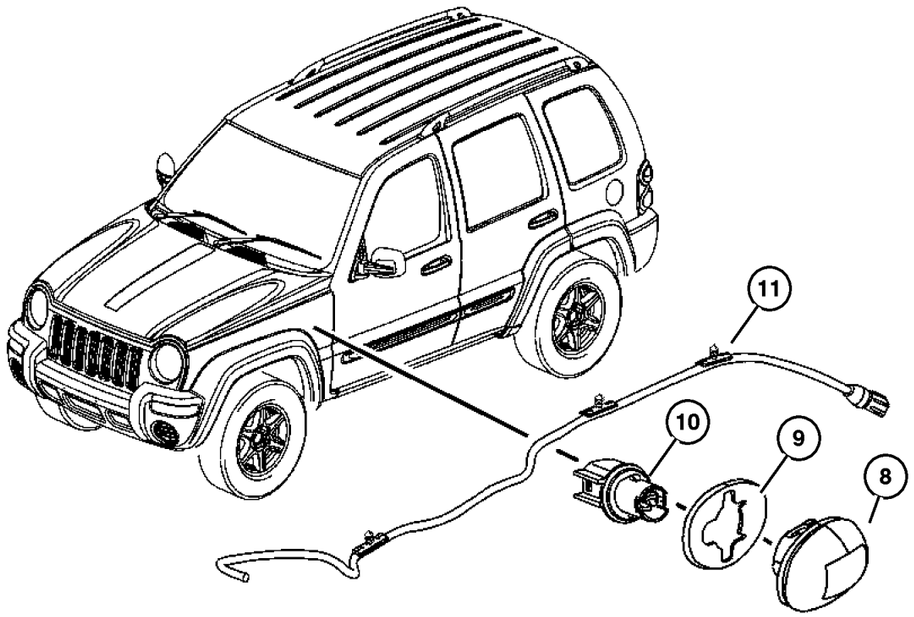

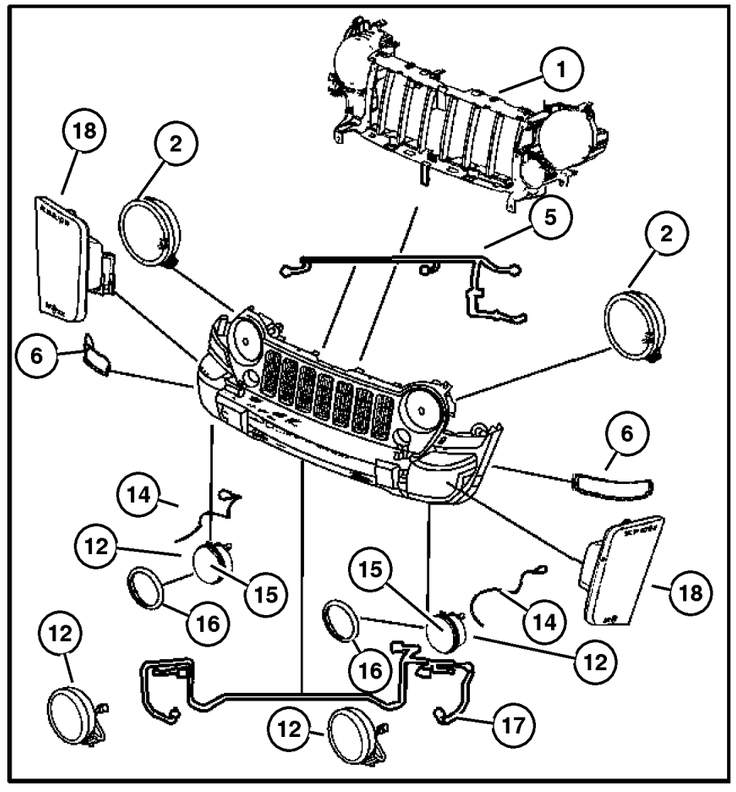

ITEM	PART NUMBER	QTY	LINE	SERIES	BODY	ENGINE	TRANS	TRIM	DESCRIPTION
For bulbs see illustration 1125									
1									REINFORCEMENT, Grille Opening
	55156 755AF	1	J, T	H, P					
		1	J	H, P		ED0, EK0			
		1	J	H, P		EN0			
		1	U	H, P		ED0, EK0			
		1	U	H, P		EN0			
	55156 968AE	1	J, T	M					
		1	J	M					
		1	U	M					
2									HEADLAMP
	55155 812AD	1	J	H, P		ED0, EK0			Right,Export
		1	J	H, P		EN0			Right,Export
		1	J	M					Right,Export
	55155 813AD	1	J	H, P		ED0, EK0			Left,Export
		1	J	M					Left,Export
		1	J	H, P		EN0			Left,Export
	55155 814AD	1	U	H, P		ED0, EK0			Right
		1	U	H, P		EN0			Right
		1	U	M					Right
	55155 815AD	1	U	H, P		ED0, EK0			Left
		1	U	H, P		EN0			Left
		1	U	M					Left
	55155 816AD	1	J	H, P		ED0, EK0			[JKL], Right
		1	J	H, P		EN0			[JKL], Right
		1	J	M					[JKL], Right
	55155 817AD	1	J	H, P		ED0, EK0			[JKL], Left
		1	J	M					[JKL], Left
		1	J	H, P		EN0			[JKL], Left
	55155 818AD	1	U	H, P		ED0, EK0			[JKL], Right
		1	U	H, P		EN0			[JKL], Right
		1	U	M					[JKL], Right

2006 Liberty (KJ)

SERIES	LINE	BODY	ENGINE	TRANSMISSION
H =HIGHLINE	T =JEEP - 2WD	74 =SPORT UTILITY 4-DR	EKG=3.7L V6 Eng.	DG6=4-Spd. Auto. 42RLE Trans.
M =MEDIUM	J =JEEP - 4WD		ENR=2.8L 4 Cyl Turbo Diesel Eng.	DGV=4-Spd. Auto. VLP Trans.
P =PREMIUM	U =JEEP - 4WD (RHD)		ENJ=2.5L 4 Cyl 16V Turbo Diesel Eng.	DGQ=5-Spd Auto. 5-45RFE Trans.
			ED1=2.4L 4 Cyl DOHC 16v SMPI Eng.	DEH=6-Speed Man. NSG370 Trans.
				DDD=5-Speed HD Man. Trans.
				DDK=5-Speed HD Man. Trans.

Lamp, Front
Figure 008-1105

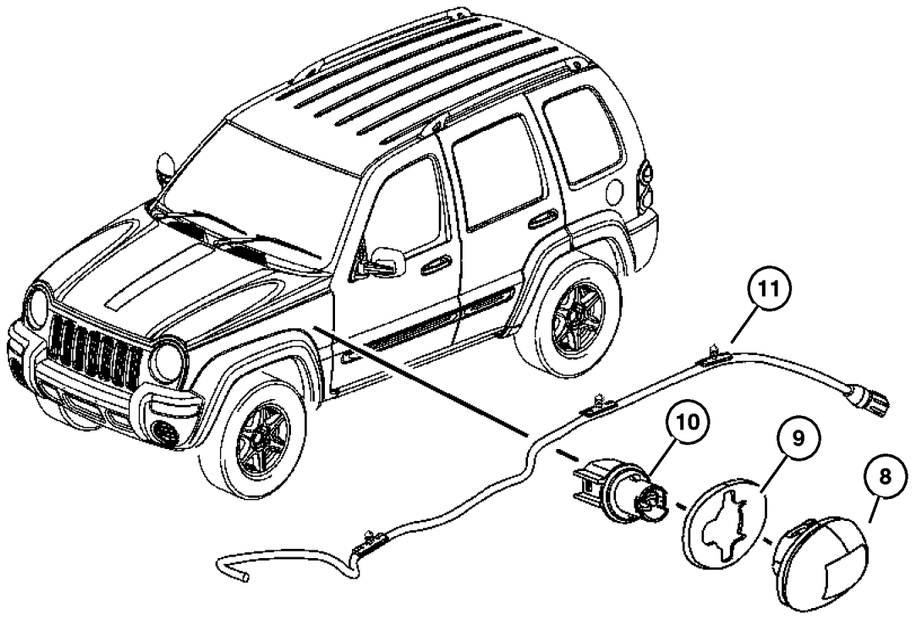

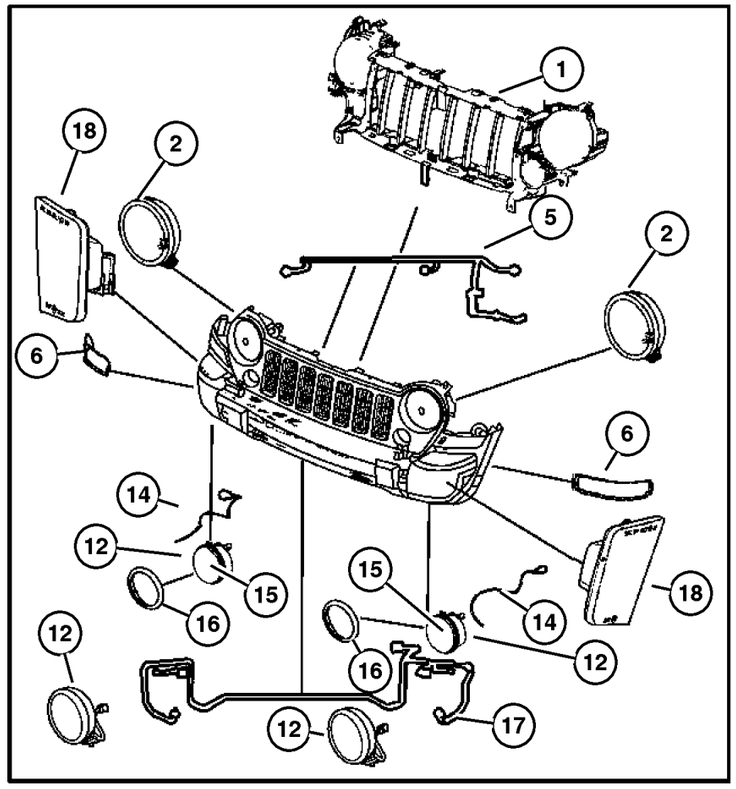

ITEM	PART NUMBER	QTY	LINE	SERIES	BODY	ENGINE	TRANS	TRIM	DESCRIPTION
	55155 819AD	1	U	H, P		ED0,			[JKL], Left
						EK0			
		1	U	H, P		EN0			[JKL], Left
		1	U	M					[JKL], Left
	55157 140AA	1	J, T	H, P					Right
		1	J, T	M					Right
	55157 141AA	1	J, T	H, P					Left
		1	J, T	M					Left
-3	6505 903AA-	4							SCREW AND WASHER, Self
									Tapping, M6x1x22, Headlamp
									Mounting
-4									RETAINER, Headlamp Bulb
	5126 316AA-	1	J, T	H, P					
		1	J, T	M					
5									WIRING, Headlamp
	55156 820AB	1	J, T	H, P					
	55156 821AB	1	J, T	H, P					[LNJ]
	55156 822AC	1	J	H, P		ED0,			Export
						EK0			
		1	U	H, P		ED0,			Export
						EK0			
	55156 823AC	1	J	H, P		ED0,			[LNJ], Export
						EK0			
		1	J	H, P		EN0			[LNJ], Export
		1	U	H, P		ED0,			[LNJ], Export
						EK0			
		1	U	H, P		EN0			[LNJ], Export
	55156 824AC	1	J	H, P		ED0,			[JKL], Export
						EK0			
		1	U	H, P		ED0,			[JKL], Export
						EK0			
	55156 825AC	1	J	H, P		ED0,			[JKL,LNJ], Export
						EK0			
		1	J	H, P		EN0			[JKL,LNJ], Export
		1	U	H, P		ED0,			[JKL,LNJ], Export
						EK0			
		1	U	H, P		EN0			[JKL,LNJ], Export
	55157 107AC	1	J, T	M					
	55157 108AD	1	J	M					Export
		1	U	M					Export
	55157 109AD	1	J	M					[JKL], Export
		1	U	M					[JKL], Export
6									LAMP, Front Combination

2006 Liberty (KJ)

SERIES	LINE	BODY	ENGINE	TRANSMISSION
H =HIGHLINE	T =JEEP - 2WD	74 =SPORT UTILITY 4-DR	EKG=3.7L V6 Eng.	DG6=4-Spd. Auto. 42RLE Trans.
M =MEDIUM	J =JEEP - 4WD		ENR=2.8L 4 Cyl Turbo Diesel Eng.	DGV=4-Spd. Auto. VLP Trans.
P =PREMIUM	U =JEEP - 4WD (RHD)		ENJ=2.5L 4 Cyl 16V Turbo Diesel Eng.	DGQ=5-Spd Auto. 5-45RFE Trans.
			ED1=2.4L 4 Cyl DOHC 16v SMPI Eng.	DEH=6-Speed Man. NSG370 Trans.
				DDD=5-Speed HD Man. Trans.
				DDK=5-Speed HD Man. Trans.

Lamp, Front
Figure 008-1105

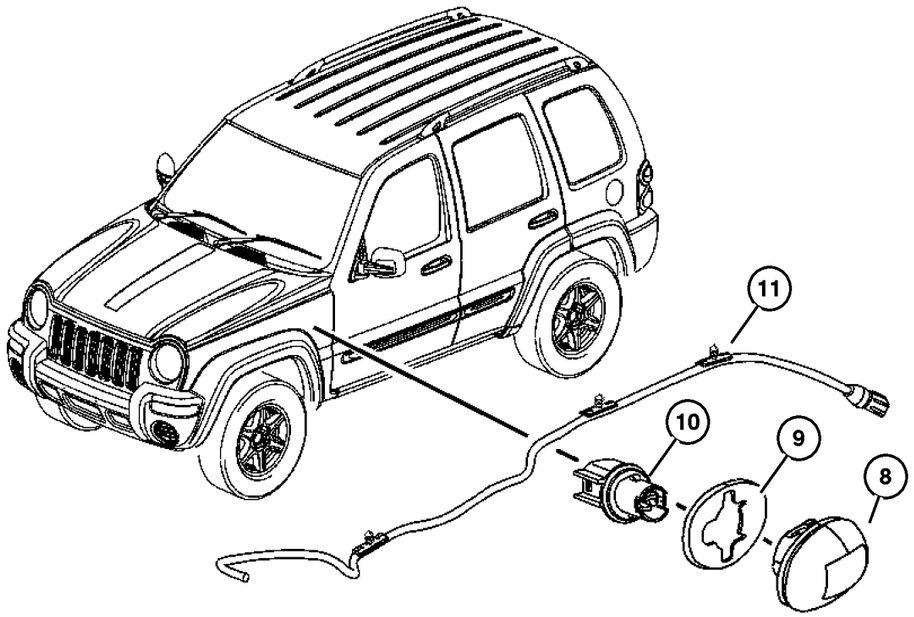

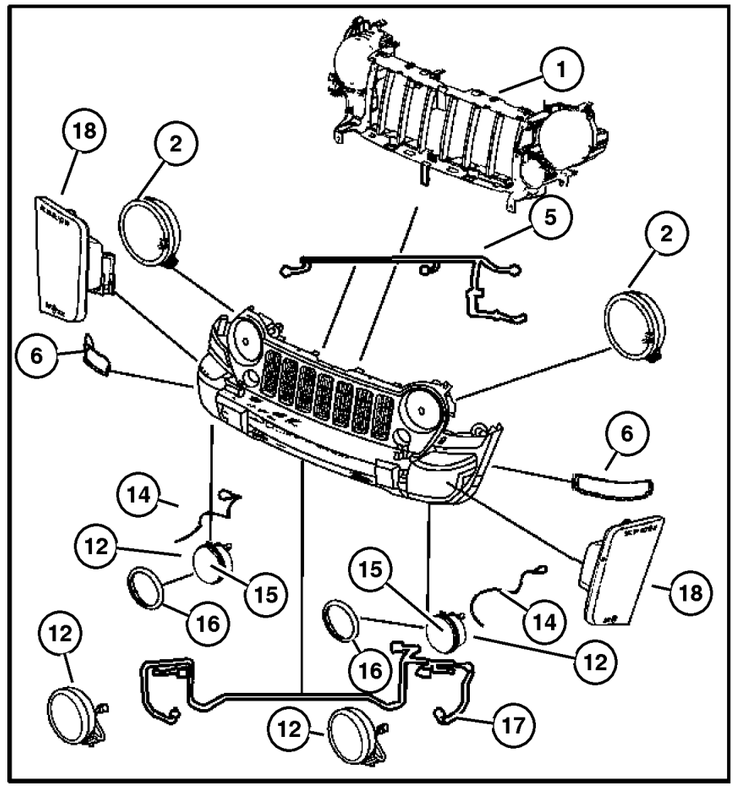

ITEM	PART NUMBER	QTY	LINE	SERIES	BODY	ENGINE	TRANS	TRIM	DESCRIPTION
	55156 766AD	1							Right
	55156 767AD	1							Left
-7									SOCKET, Side Marker
	55156 754AA-	1	J	H, P		ED0, EK0			
		1	J	H, P		EN0			
		1	U	H, P		ED0, EK0			
		1	U	H, P		EN0			
8	5288 895AC	1							LAMP, Side Repeater
9	4676 801	1							GASKET, Side Marker Lamp
10	5288 931AA	1							SOCKET, Side Repeater Lamp
11	55156 010AA	2							WIRING, Side Repeater Lamp
12	55156 923AD	2		M					LAMP, Fog
-13	5179 204AA-	2	J, T	H, P					MOUNTING KIT, Light, Includes fog lamp adjuster
14	5143 393AA	1		M					WIRING, Fog Lamp
15	5142 393AB	1		M					LENS, Fog Lamp
16	5142 394AA	1		M					BEZEL, Fog Lamp
17	55157 102AB	2							WIRING, Front End Lighting
18									LAMP, Side Marker
	55156 882AB	1							Right
	55156 883AB	1							Left
-19	5303 412AB-	2							CLIP

2006 Liberty (KJ)

SERIES	LINE	BODY	ENGINE	TRANSMISSION
H =HIGHLINE	T =JEEP - 2WD	74 =SPORT UTILITY 4-DR	EKG=3.7L V6 Eng.	DG6=4-Spd. Auto. 42RLE Trans.
M =MEDIUM	J =JEEP - 4WD		ENR=2.8L 4 Cyl Turbo Diesel Eng.	DGV=4-Spd. Auto. VLP Trans.
P =PREMIUM	U =JEEP - 4WD (RHD)		ENJ=2.5L 4 Cyl 16V Turbo Diesel Eng.	DGQ=5-Spd Auto. 5-45RFE Trans.
			ED1=2.4L 4 Cyl DOHC 16v SMPI Eng.	DEH=6-Speed Man. NSG370 Trans.
				DDD=5-Speed HD Man. Trans.
				DDK=5-Speed HD Man. Trans.

Lamps Roof (Renegade)
Figure 008-1110

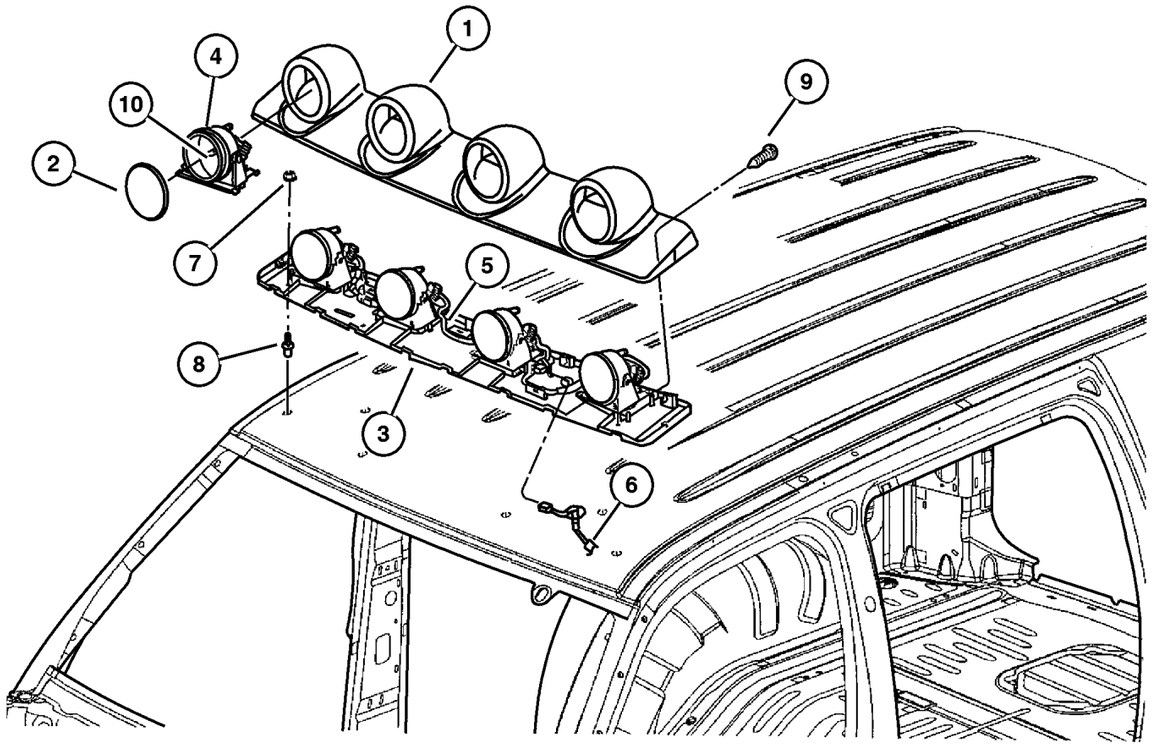

ITEM	PART NUMBER	QTY	LINE	SERIES	BODY	ENGINE	TRANS	TRIM	DESCRIPTION
1									COVER, Light Bar Support
	5HZ01 RXFAH	1							
	5HZ08 RXFAH	1							[ABE]
2	5HZ07 RXFAF	1							COVER, Lamp
3	5083 967AA	1							BAR, Light Support
4	52112 063AC	4							LAMP, Off Road
5									WIRING, Off Road Light
	52112 062AE	1							
	52112 092AE	1							[ABE]
6	56050 301AA	1							WIRING, Roof Lamps
7	6507 782AA	6							RIVET STUD
8	6504 513	6							NUT AND WASHER, Hex Nut-Coned Washer, M6 x 1.00
9	6507 783AA	4							SCREW, Shoulder
10									BULB, Headlamp
	L000 9006	1							
		1							[ABE]

2006 Liberty (KJ)

SERIES	LINE	BODY	ENGINE	TRANSMISSION
H =HIGHLINE	T =JEEP - 2WD	74 =SPORT UTILITY 4-DR	EKG=3.7L V6 Eng.	DG6=4-Spd. Auto. 42RLE Trans.
M =MEDIUM	J =JEEP - 4WD		ENR=2.8L 4 Cyl Turbo Diesel Eng.	DGV=4-Spd. Auto. VLP Trans.
P =PREMIUM	U =JEEP - 4WD (RHD)		ENJ=2.5L 4 Cyl 16V Turbo Diesel Eng.	DGQ=5-Spd Auto. 5-45RFE Trans.
			ED1=2.4L 4 Cyl DOHC 16v SMPI Eng.	DEH=6-Speed Man. NSG370 Trans.
				DDD=5-Speed HD Man. Trans.
				DDK=5-Speed HD Man. Trans.

Lamp, Rear
Figure 008-1115

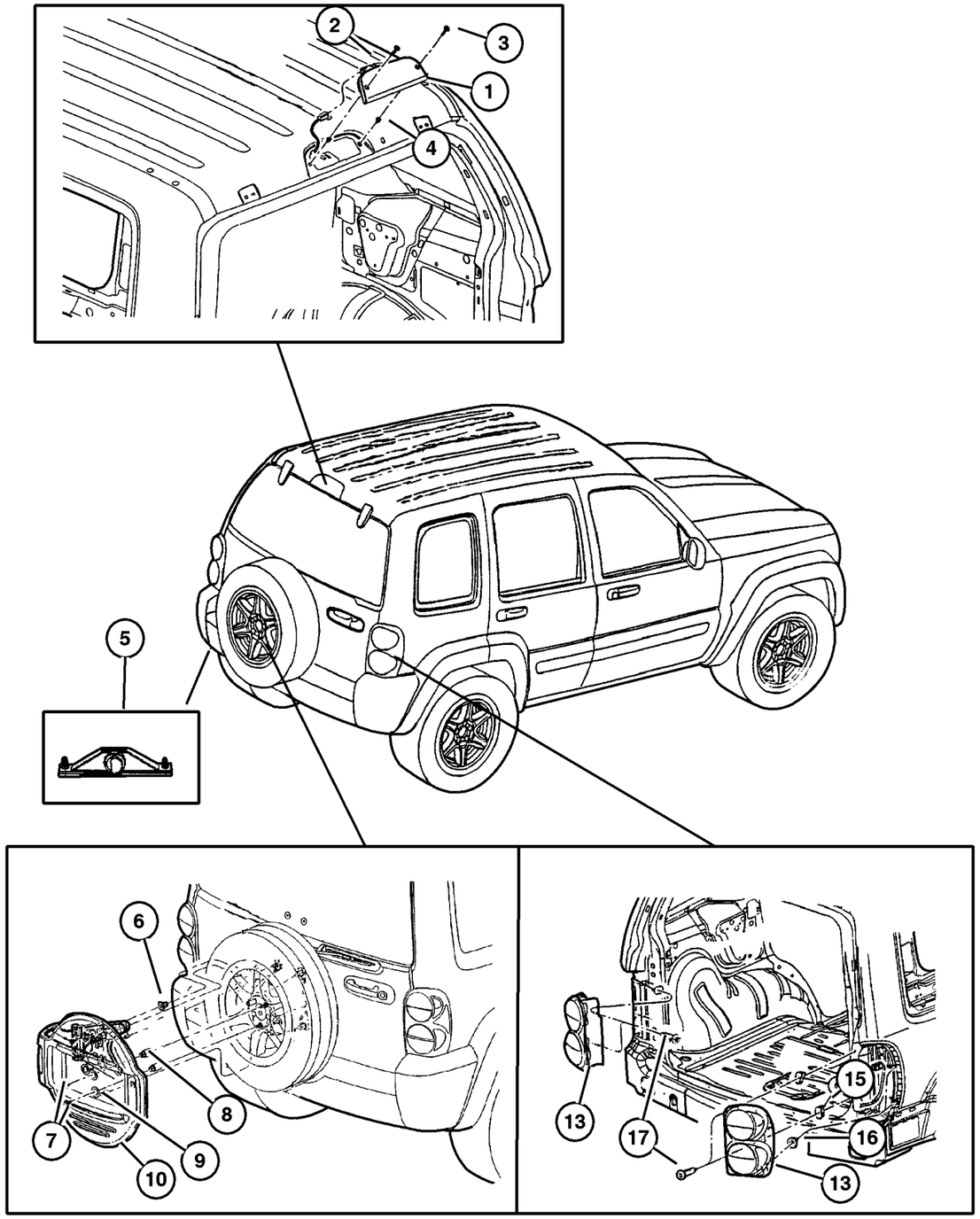

ITEM	PART NUMBER	QTY	LINE	SERIES	BODY	ENGINE	TRANS	TRIM	DESCRIPTION
For bulbs see illustration 1125									
1	55157 130AA	1							LAMP, High Mounted Stop
2	55156 027AB	1							SOCKET, High Mounted Stop Lamp
3	6036 534AA	2							SCREW, .19-16x1.00
4	6507 330AA	2							NUT, Plastic Snap-in, High Mounted Stop Lamp mounting
5									LAMP, License Plate
	4574 904	1							[MLC]
		1							[MLS]
		1							[MLA]
6									NUT/RIVET, M6x1.0, (NOT SERVICED) (Not Serviced)
7	6506 429AA	2	J, U						SCREW, M8x1.25x21
8	6036 303AA	2	J, U						NUT, .50-20, [TBR], Export
9	6507 799AA	4							NUT, Wheel
10									BRACKET, License Plate
	5HF06 RXFAK	1	J, U	H, P					[TBR], Export
		1	J, U	M					[TBR], Export
-11									LAMP, License
	55156 006AA-	2	J, U	H, P					[TBR], Export
		2	J, U	M					[TBR], Export
-12	56010 329AD-	1							WIRING, License Lamp
13									LAMP, Tail Stop Turn
	55157 060AD	1							Right
	55157 061AD	1							Left
	55157 062AC	1		H, P					[ABE], Right
	55157 063AC	1		H, P					[ABE], Left
	5KJ40 RXFAC	1							[MXG], Right
	5KJ41 RXFAC	1							[MXG], Left
	5KJ44 RXFAC	1							[MXG,ABE], Right
	5KJ45 RXFAC	1							[MXG,ABE], Left
-14	4676 589	2							SOCKET, Board
15	6507 347AA	4							NUT, Plastic Snap-in
16	6507 347AA	4							NUT, Plastic Snap-in, Tail lamp mounting
17	6104 568AA	4							SCREW, Tail lamp mounting
-18									WIRING, Rear Lamp
	56050 283AB-	1	J, T						
	56050 484AB-	1	J, U						Export
	56050 595AB-	1	J, T						[XGM]
	56050 868AA-	1	J, U						[XGM], Export

2006 Liberty (KJ)

SERIES	LINE	BODY	ENGINE	TRANSMISSION
H =HIGHLINE	T =JEEP - 2WD	74 =SPORT UTILITY 4-DR	EKG=3.7L V6 Eng.	DG6=4-Spd. Auto. 42RLE Trans.
M =MEDIUM	J =JEEP - 4WD		ENR=2.8L 4 Cyl Turbo Diesel Eng.	DGV=4-Spd. Auto. VLP Trans.
P =PREMIUM	U =JEEP - 4WD (RHD)		ENJ=2.5L 4 Cyl 16V Turbo Diesel Eng.	DGQ=5-Spd Auto. 5-45RFE Trans.
			ED1=2.4L 4 Cyl DOHC 16v SMPI Eng.	DEH=6-Speed Man. NSG370 Trans.
				DDD=5-Speed HD Man. Trans.
				DDK=5-Speed HD Man. Trans.

Lamp, Courtesy
Figure 008-1120

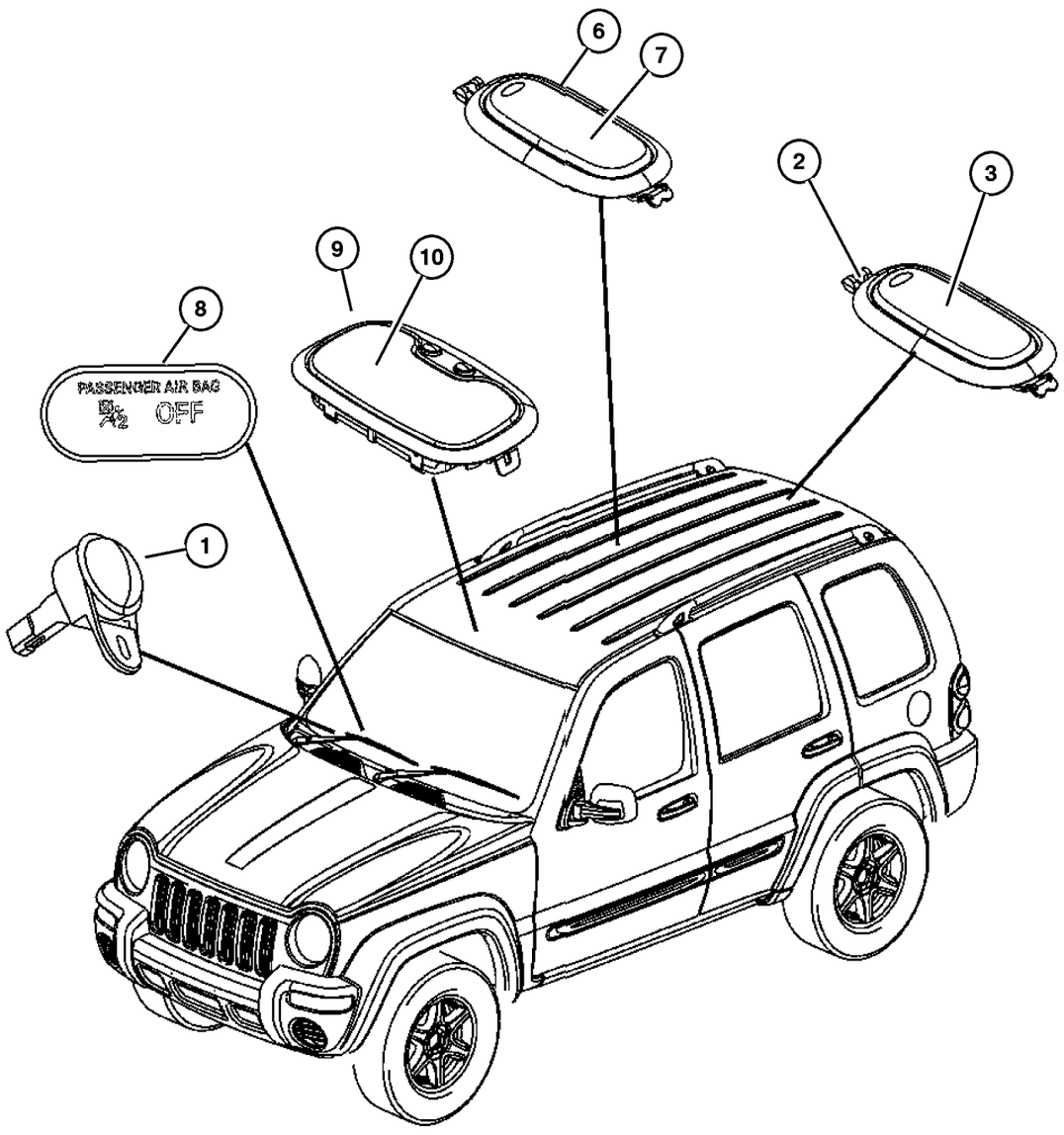

ITEM	PART NUMBER	QTY	LINE	SERIES	BODY	ENGINE	TRANS	TRIM	DESCRIPTION
NOTE: see 8 1125 for Bulbs									
1	56042 559AA	2		M, P					LAMP, Courtesy, Under dash
2									LAMP, Cargo
	1BC77 BD1AA	1	J, T						
		1	J, U						
3									LENS, Dome Lamp
	5093 414AA	1	J, T						Cargo Lamp
		1	J, U						Cargo Lamp
-4									LAMP, Message Center
	4437 661	3	J, T						
		3	J, U						
-5									LENS, Message Center
	5012 882AA-	1	J, T						
		1	J, U						
6									LAMP, Dome
	5JG55 BD1AB	1	J, T						
	5JG58 BD1AB	1	J, T						[AHM]
		1	J, U						
7									LENS, Dome Lamp
	5093 414AA	1	J, T						
		1	J, U						
8	56010 552AB	1							LAMP, Warning, Passenger Airbag ON/OFF System
9									LAMP, Reading
	WT01 BD1AA	1	J, T						
		1	J, U						
	WT06 BD1AA	1	J, T						[GWA]
		1	J, U						[GWA]
10									LENS, Reading Lamp
	5093 415AA	1	J, T						
		1	J, U						

2006 Liberty (KJ)

SERIES	LINE	BODY	ENGINE	TRANSMISSION
H =HIGHLINE	T =JEEP - 2WD	74 =SPORT UTILITY 4-DR	EKG=3.7L V6 Eng.	DG6=4-Spd. Auto. 42RLE Trans.
M =MEDIUM	J =JEEP - 4WD		ENR=2.8L 4 Cyl Turbo Diesel Eng.	DGV=4-Spd. Auto. VLP Trans.
P =PREMIUM	U =JEEP - 4WD (RHD)		ENJ=2.5L 4 Cyl 16V Turbo Diesel Eng.	DGQ=5-Spd Auto. 5-45RFE Trans.
			ED1=2.4L 4 Cyl DOHC 16v SMPI Eng.	DEH=6-Speed Man. NSG370 Trans.
				DDD=5-Speed HD Man. Trans.
				DDK=5-Speed HD Man. Trans.

LAMPS/LIGHTING - EXTERIOR

BULB APPLICATION TABLE

LAMP	BULB	
BACKUP	3157 P27/7W	1
BRAKE	3157 P27/7W	1
CENTER HIGH MOUNTED STOP	921/W16W	2
FRONT FOG (FASCIA MOUNTED)	H3/55W	3
FRONT FOG (GRILLE MOUNTED)	9145/H10	4
FRONT PARK/TURN	3157 P27/7W	1
FRONT POSITION	W5W	5
FRONT SIDE MARKER	168	6
HEADLAMP (NORTH AMERICA)	9007QL	7
HEADLAMP (EXCEPT NORTH AMERICA)	H-4 W0W6	8
LICENSE (NORTH AMERICA)	168	6
LICENSE (EXCEPT NORTH AMERICA)	W5W	5
LIGHT BAR (OFF ROAD)	9006LL	9
REAR FOG	3157 P27/7W	1
REAR PARK/TAIL	3157 P27/7W	1
REAR TURN	3757A PY27/7W	10
SIDE REPEATER	W5W	5

LAMPS/LIGHTING - INTERIOR

COURTESY LAMPS

BULB APPLICATION TABLE

LAMP	BULB	
Cargo	578	11
Courtesy	906	12
Front Map/Reading	578	11
Rear Dome	578	11
Vanity Mirror	MOPAR 6501966	13

PANEL LAMPS

BULB APPLICATION TABLE

LAMP	BULB	
Ash Receiver	161	14
Cluster Illumination	103	15
Compass Mini-Trip Illumination	MOPAR 443766	16
Heater-A/C Control Illumination	74	17
Transmission Range Indicator Illumination	S14V	

ITEM	PART NUMBER	QTY	LINE	SERIES	BODY	ENGINE	TRANS	TRIM	DESCRIPTION
Notes:									
[ED0] = 2.4L 4 Cylinder Engine									
[EK0] = 3.7L V6 Cylinder Engine									
[DG0] = All Automatic Transmissions									
1	L000 3157	2							BULB, 3157
2	L000 921E	1							BULB, 921
3	L00H 355W	1		M					BULB, Fog Lamp, H-3 55 WATT
4									BULB, Fog Lamp, 50 Watt
	L000 9145	2	J	H, P		ED0,			
						EK0			
		2	J	H, P		EN0			
		2	U	H, P		ED0,			
						EK0			
		2	U	H, P		EN0			
5	L002 825W5W	1							BULB, W10/5
6	L000 0168	1							BULB, 168
7									BULB, Headlamp
	L0009 007QL	1	J, T	H, P					
		1	J, T	M					
8									BULB, H4 Clear
	J324 2537	1	J	H, P		ED0,			
						EK0			
		1	U	H, P		ED0,			
						EK0			
		1	J	M					
		1	U	M					
9	L000 9006	1							BULB, Headlamp, Roof lamps
10	L003 757A	1							BULB, 3757APY27/7W
11									BULB, 578
	L000 0578	1	J, T						
		1	J, U						
12	L000 0906	2		M, P					BULB, 906
13									BULB, 37
	L000 0037	1	J, T						
		1	J, U						
14									BULB, 161, (NOT SERVICED) (Not Serviced)
15									BULB AND SOCKET, (NOT SERVICED) (Not Serviced)
16									LAMP, Message Center
	4437 661	3	J, T						
		3	J, U						
17	5069 170AA	1							BULB, Heater and A/C Control

2006 Liberty (KJ)

SERIES	LINE	BODY	ENGINE	TRANSMISSION
H =HIGHLINE	T =JEEP - 2WD	74 =SPORT UTILITY 4-DR	EKG=3.7L V6 Eng.	DG6=4-Spd. Auto. 42RLE Trans.
M =MEDIUM	J =JEEP - 4WD		ENR=2.8L 4 Cyl Turbo Diesel Eng.	DGV=4-Spd. Auto. VLP Trans.
P =PREMIUM	U =JEEP - 4WD (RHD)		ENJ=2.5L 4 Cyl 16V Turbo Diesel Eng.	DGQ=5-Spd Auto. 5-45RFE Trans.
			ED1=2.4L 4 Cyl DOHC 16v SMPI Eng.	DEH=6-Speed Man. NSG370 Trans.
				DDD=5-Speed HD Man. Trans.
				DDK=5-Speed HD Man. Trans.

LAMPS/LIGHTING - EXTERIOR

BULB APPLICATION TABLE

LAMP	BULB
BACKUP	3157 P27/7W (1)
BRAKE	3157 P27/7W (1)
CENTER HIGH MOUNTED STOP	921/W16W (2)
FRONT FOG (FASCIA MOUNTED)	H3/55W (3)
FRONT FOG (GRILLE MOUNTED)	9145/H10 (4)
FRONT PARK/TURN	3157 P27/7W (1)
FRONT POSITION	W5W (5)
FRONT SIDE MARKER	168 (6)
HEADLAMP (NORTH AMERICA)	9007QL (7)
HEADLAMP (EXCEPT NORTH AMERICA)	H-4 W0W6 (8)
LICENSE (NORTH AMERICA)	168 (6)
LICENSE (EXCEPT NORTH AMERICA)	W5W (5)
LIGHT BAR (OFF ROAD)	9006LL (9)
REAR FOG	3157 P27/7W (1)
REAR PARK/TAIL	3157 P27/7W (1)
REAR TURN	3757A PY27/7W (10)
SIDE REPEATER	W5W (5)

LAMPS/LIGHTING - INTERIOR

COURTESY LAMPS

BULB APPLICATION TABLE

LAMP	BULB
Cargo	578 (11)
Courtesy	906 (12)
Front Map/Reading	578 (11)
Rear Dome	578 (11)
Vanity Mirror	MOPAR 6501966 (13)

PANEL LAMPS

BULB APPLICATION TABLE

LAMP	BULB
Ash Receiver	161 (14)
Cluster Illumination	103 (15)
Compass Mini-Trip Illumination	MOPAR 443766 (16)
Heater-A/C Control Illumination	74 (17)
Transmission Range Indicator Illumination	S14V

ITEM	PART NUMBER	QTY	LINE	SERIES	BODY	ENGINE	TRANS	TRIM	DESCRIPTION
-18	L000 3893	2							BULB, T8/4
-19									BULB, 192
	L000 0192	2	J, T						
		2	J, U						

2006 Liberty (KJ)

SERIES
H =HIGHLINE
M =MEDIUM
P =PREMIUM

LINE
T =JEEP - 2WD
J =JEEP - 4WD
U =JEEP - 4WD (RHD)

BODY
74 =SPORT UTILITY 4-DR

ENGINE
EKG=3.7L V6 Eng.
ENR=2.8L 4 Cyl Turbo Diesel Eng.
ENJ=2.5L 4 Cyl 16V Turbo Diesel Eng.
ED1=2.4L 4 Cyl DOHC 16v SMPI Eng.

TRANSMISSION
DG6=4-Spd. Auto. 42RLE Trans.
DGV=4-Spd. Auto. VLP Trans.
DGQ=5-Spd Auto. 5-45RFE Trans.
DEH=6-Speed Man. NSG370 Trans.
DDD=5-Speed HD Man. Trans.
DDK=5-Speed HD Man. Trans.

Wiring, Engine and Related Parts 4 Cylinder
Figure 008-1205

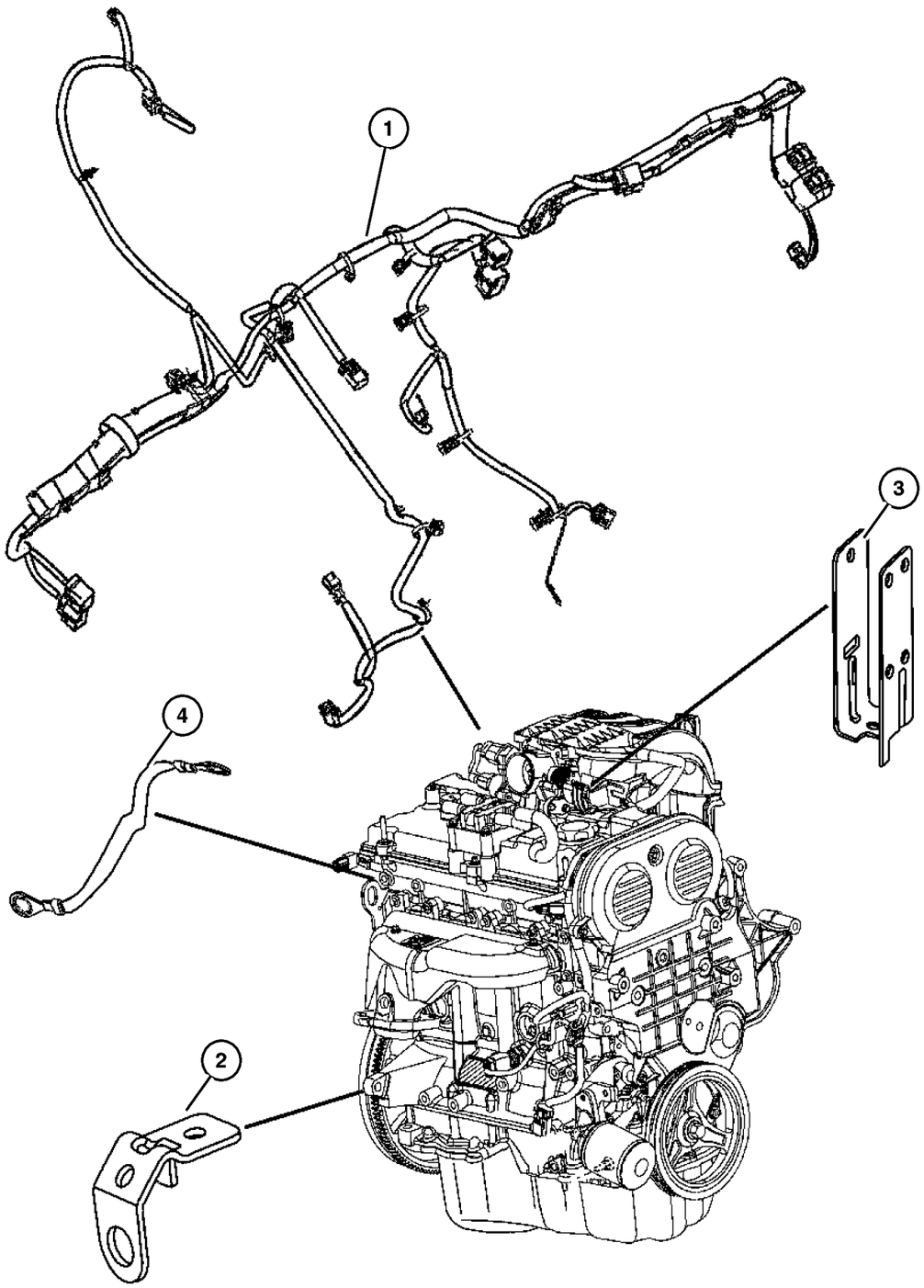

ITEM	PART NUMBER	QTY	LINE	SERIES	BODY	ENGINE	TRANS	TRIM	DESCRIPTION
Notes:									
[ED0] = 2.4L 4 Cylinder Engine									
[EK0] = 3.7L V6 Cylinder Engine									
[EN0] =All 4/5 Cylinder Turbo Diesel Engines									
[DBB]=All Manual Transmissions									
[DG0]=All Automatic Transmissions									
[DG6]=4 Speed Automatic Transmissions									
[DDD]= 5 Speed Heavy Duty Manual Transmission									
[DDK]= 5 Speed Heavy Duty Manual Transmission									
1									WIRING, Engine
	56050 448AF	1	J, T			EN0	DG0		
	56050 449AF	1	J, T			EN0	DBB		
	56050 450AF	1	U			EN0	DG0		
	56050 451AF	1	U			EN0	DBB		
2	56041 379AA	2				EN0			CLIP, Housing
3									BRACKET, Wiring
	4801 326AA	1				EN0			
	56010 275AB	1	U						
	56010 291AB	1	J, T						
4	56038 750AB	1							STRAP, Ground

2006 Liberty (KJ)

SERIES	LINE	BODY	ENGINE	TRANSMISSION
H =HIGHLINE	T =JEEP - 2WD	74 =SPORT UTILITY 4-DR	EKG=3.7L V6 Eng.	DG6=4-Spd. Auto. 42RLE Trans.
M =MEDIUM	J =JEEP - 4WD		ENR=2.8L 4 Cyl Turbo Diesel Eng.	DGV=4-Spd. Auto. VLP Trans.
P =PREMIUM	U =JEEP - 4WD (RHD)		ENJ=2.5L 4 Cyl 16V Turbo Diesel Eng.	DGQ=5-Spd Auto. 5-45RFE Trans.
			ED1=2.4L 4 Cyl DOHC 16v SMPI Eng.	DEH=6-Speed Man. NSG370 Trans.
				DDD=5-Speed HD Man. Trans.
				DDK=5-Speed HD Man. Trans.

Wiring, Engine and Related Parts 6 cylinder
Figure 008-1210

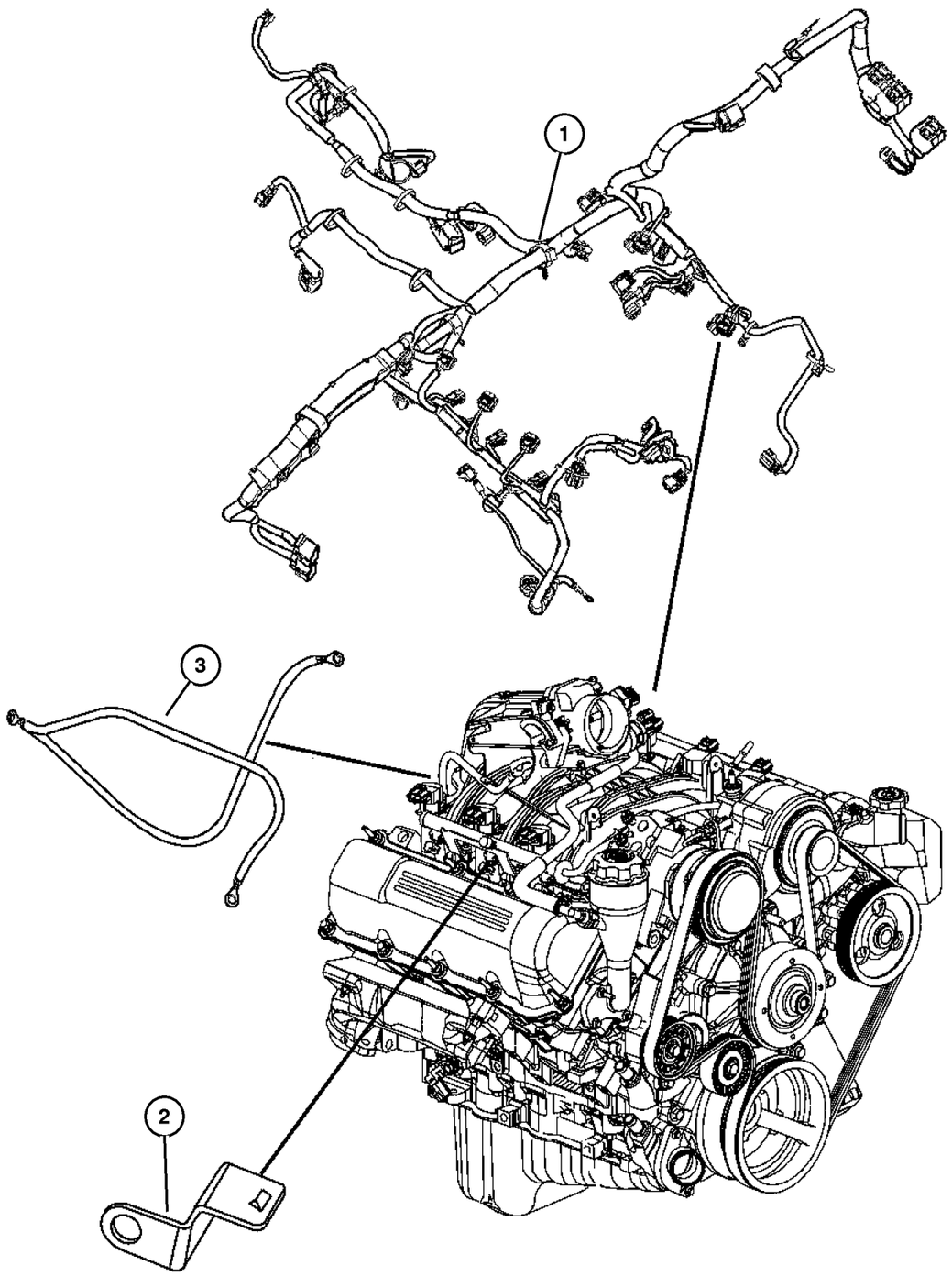

ITEM	PART NUMBER	QTY	LINE	SERIES	BODY	ENGINE	TRANS	TRIM	DESCRIPTION
1									WIRING, Engine
	4801 258AB	1	J			EK0	DG0		
		1	J			EK0	DGV		
	4801 259AB	1	T			EK0	DG0		
		1	T			EK0	DGV		
	4801 260AB	1	U			EK0	DG0		
		1	U			EK0	DGV		
	4801 261AB	1	J			EK0	DBB		
	4801 262AB	1	T			EK0	DBB		
	4801 263AB	1	J			EK0	DG0		[BNB]
		1	J			EK0	DGV		[BNB]
	4801 264AB	1	U			EK0	DG0		[BNB]
		1	U			EK0	DGV		[BNB]
	4801 265AB	1	T			EK0	DG0		[BNB]
		1	T			EK0	DGV		[BNB]
	4801 266AB	1	J			EK0	DBB		[BNB]
	4801 267AB	1	T			EK0	DBB		[BNB]
	4801 431AA	1	J			EK0	DG6		
	4801 432AA	1	T			EK0	DG6		
	4801 433AA	1	U			EK0	DG6		
	4801 434AA	1	J			EK0	DG6		[BNB]
	4801 435AA	1	U			EK0	DG6		[BNB]
	4801 436AA	1	T			EK0	DG6		[BNB]
2	56050 308AA	1				EK0			BRACKET, Wiring Harness
3	56038 750AB	1							STRAP, Ground, Hood to Fender

2006 Liberty (KJ)

SERIES	LINE	BODY	ENGINE	TRANSMISSION
H =HIGHLINE	T =JEEP - 2WD	74 =SPORT UTILITY 4-DR	EKG=3.7L V6 Eng.	DG6=4-Spd. Auto. 42RLE Trans.
M =MEDIUM	J =JEEP - 4WD		ENR=2.8L 4 Cyl Turbo Diesel Eng.	DGV=4-Spd. Auto. VLP Trans.
P =PREMIUM	U =JEEP - 4WD (RHD)		ENJ=2.5L 4 Cyl 16V Turbo Diesel Eng.	DGQ=5-Spd Auto. 5-45RFE Trans.
			ED1=2.4L 4 Cyl DOHC 16v SMPI Eng.	DEH=6-Speed Man. NSG370 Trans.
				DDD=5-Speed HD Man. Trans.
				DDK=5-Speed HD Man. Trans.

Ground Straps
Figure 008-1215

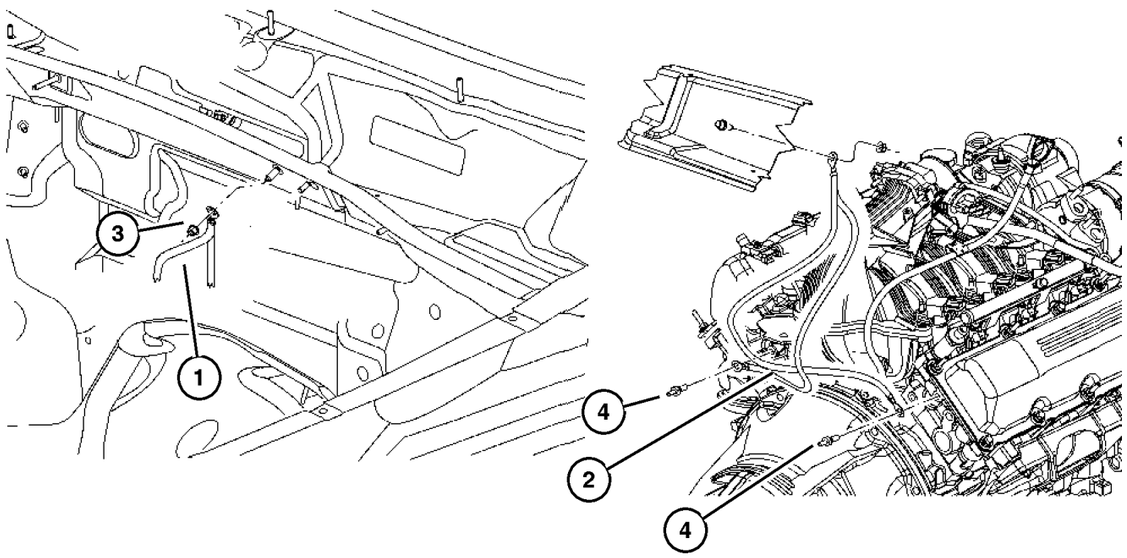

ITEM	PART NUMBER	QTY	LINE	SERIES	BODY	ENGINE	TRANS	TRIM	DESCRIPTION
1	56038 750AB	1							STRAP, Ground, Hood to fender
2	56038 554AB	1				EK0			STRAP, Ground, Engine
3	6101 802	1							NUT
4									STUD, Double Ended, CONE.WASH. HEADER.PT~~M8X1.25X39.3,
									(NOT SERVICED) (Not Serviced)

2006 Liberty (KJ)

SERIES	LINE	BODY	ENGINE	TRANSMISSION
H =HIGHLINE	T =JEEP - 2WD	74 =SPORT UTILITY 4-DR	EKG=3.7L V6 Eng.	DG6=4-Spd. Auto. 42RLE Trans.
M =MEDIUM	J =JEEP - 4WD		ENR=2.8L 4 Cyl Turbo Diesel Eng.	DGV=4-Spd. Auto. VLP Trans.
P =PREMIUM	U =JEEP - 4WD (RHD)		ENJ=2.5L 4 Cyl 16V Turbo Diesel Eng.	DGQ=5-Spd Auto. 5-45RFE Trans.
			ED1=2.4L 4 Cyl DOHC 16v SMPI Eng.	DEH=6-Speed Man. NSG370 Trans.
				DDD=5-Speed HD Man. Trans.
				DDK=5-Speed HD Man. Trans.

Wiring, Headlamp to Dash
Figure 008-1305

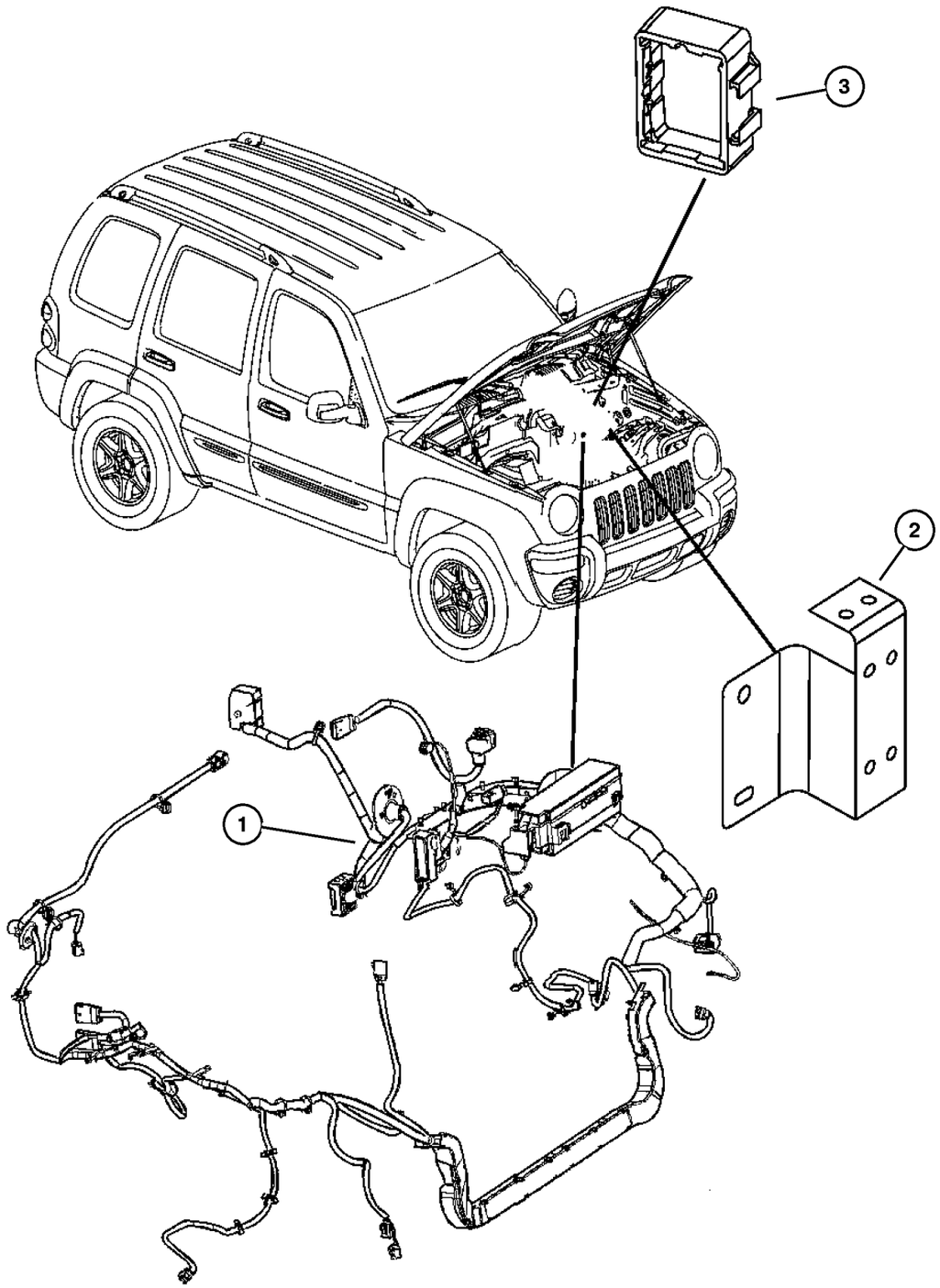

ITEM	PART NUMBER	QTY	LINE	SERIES	BODY	ENGINE	TRANS	TRIM	DESCRIPTION
Square Convoluted Tubing is Serviced with the Headlamp to Dash Harness Only									
1									WIRING, Headlamp to Dash
	56047 151AC	1	J, T			EK0	DG0		[LSB,LSC,BNB]
	56047 153AC	1	J, T			EK0	DG0		[LSB,LSC,BNB,XGM]
	56047 175AC	1	J, T			EK0	DBB		[BNB]
	56047 177AC	1	J, T			EK0	DBB		[BNB,XGM]
	56047 185AC	1	U			EK0	DG0		[BNB]
	56047 190AC	1	U			EK0	DG0		[BNB,XGM]
	56047 191AC	1	U			EN0	DBB		[BNB]
	56047 192AC	1	J, T			EN0	DBB		[BNB]
	56047 193AC	1	J, T			EN0	DBB		[BNB,XGM]
	56047 194AC	1	J, T			EN0	DG0		[BNB]
	56047 195AC	1	J, T			EN0	DG0		[BNB,XGM]
	56047 196AC	1	U			EN0	DG0		[BNB]
	56047 197AC	1	U			EN0	DBB		[BNB,XGM]
	56047 198AC	1	J, T			EK0	DG0		[BNB]
	56047 199AC	1	U			EN0	DG0		[BNB,XGM]
	56047 200AC	1	J, T			EK0	DG0		[BNB,XGM]
2									BRACKET, Wiring
	4801 326AA	1				EN0			
	56010 275AB	1	U						
	56010 291AB	1	J, T						
3	56009 948AA	1							COLLAR, Insulator

2006 Liberty (KJ)

SERIES	LINE	BODY	ENGINE	TRANSMISSION
H =HIGHLINE	T =JEEP - 2WD	74 =SPORT UTILITY 4-DR	EKG=3.7L V6 Eng.	DG6=4-Spd. Auto. 42RLE Trans.
M =MEDIUM	J =JEEP - 4WD		ENR=2.8L 4 Cyl Turbo Diesel Eng.	DGV=4-Spd. Auto. VLP Trans.
P =PREMIUM	U =JEEP - 4WD (RHD)		ENJ=2.5L 4 Cyl 16V Turbo Diesel Eng.	DGQ=5-Spd Auto. 5-45RFE Trans.
			ED1=2.4L 4 Cyl DOHC 16v SMPI Eng.	DEH=6-Speed Man. NSG370 Trans.
				DDD=5-Speed HD Man. Trans.
				DDK=5-Speed HD Man. Trans.

Wiring Instrument Panel
Figure 008-1405

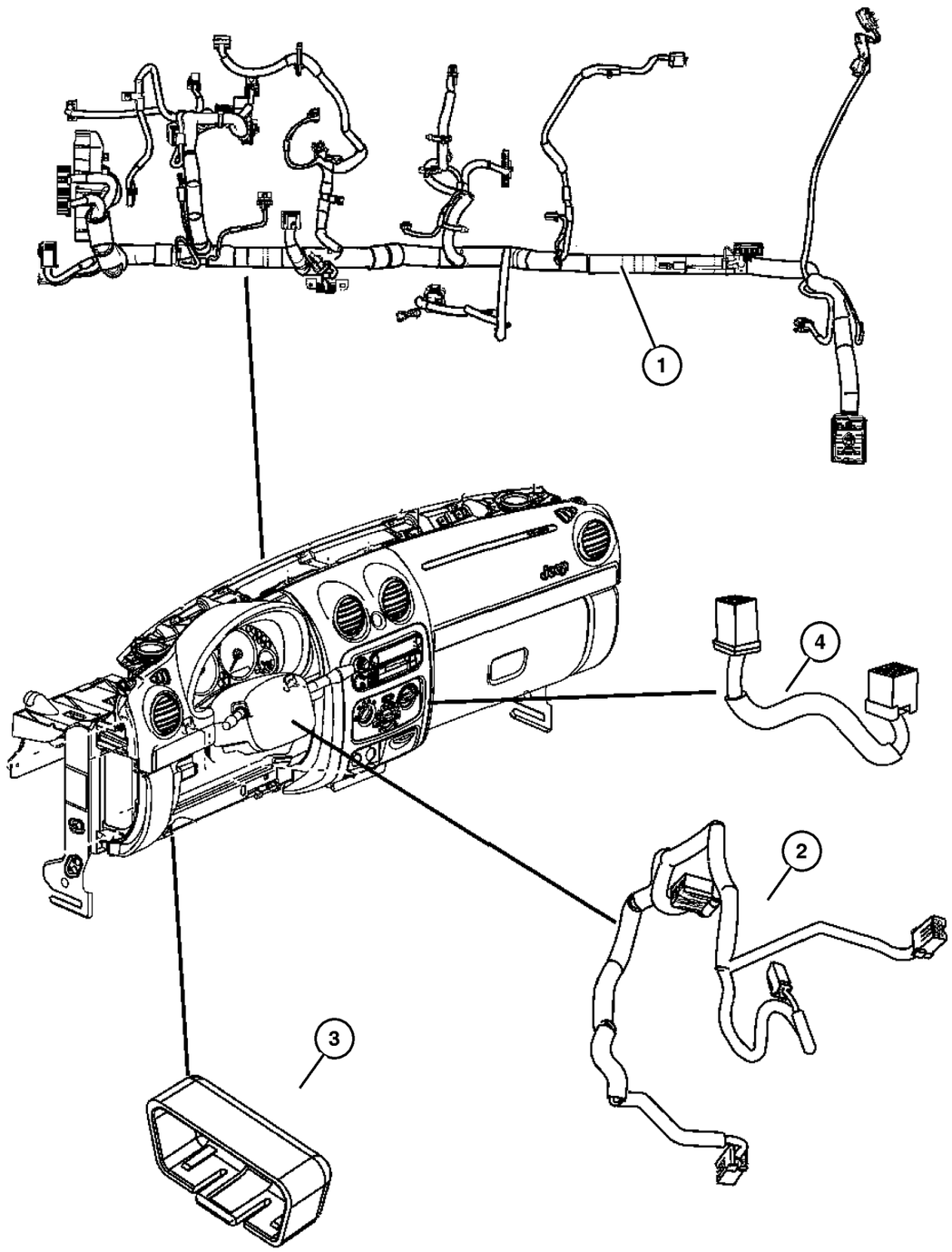

ITEM	PART NUMBER	QTY	LINE	SERIES	BODY	ENGINE	TRANS	TRIM	DESCRIPTION
1									WIRING, Instrument Panel
	56050 839AC	1	U			EN0			
	56050 840AC	1	U			EK0			
	56050 841AC	1	J			EN0			
	56050 842AC	1	J			EK0			
	56047 390AD	1	J, T			EN0			[LNS]
	56047 392AD	1	J, T			EK0			[BNB,LNS]
	56050 843AD	1	J, T			EN0			
2									WIRING, Steering Wheel
	52029 379AA	1		P					[SCG,NHM]
		1		H					[SCG,NHM]
	52029 381AA	1		P					[SCG,NHM,RDZ]
	52029 383AA	1							[SCD]
3	5604 2070	1							COVER, Wiring Protector, Export
4	56050 823AD	1							WIRING, Jumper, Hands free module

2006 Liberty (KJ)

SERIES	LINE	BODY	ENGINE	TRANSMISSION
H =HIGHLINE	T =JEEP - 2WD	74 =SPORT UTILITY 4-DR	EKG=3.7L V6 Eng.	DG6=4-Spd. Auto. 42RLE Trans.
M =MEDIUM	J =JEEP - 4WD		ENR=2.8L 4 Cyl Turbo Diesel Eng.	DGV=4-Spd. Auto. VLP Trans.
P =PREMIUM	U =JEEP - 4WD (RHD)		ENJ=2.5L 4 Cyl 16V Turbo Diesel Eng.	DGQ=5-Spd Auto. 5-45RFE Trans.
			ED1=2.4L 4 Cyl DOHC 16v SMPI Eng.	DEH=6-Speed Man. NSG370 Trans.
				DDD=5-Speed HD Man. Trans.
				DDK=5-Speed HD Man. Trans.

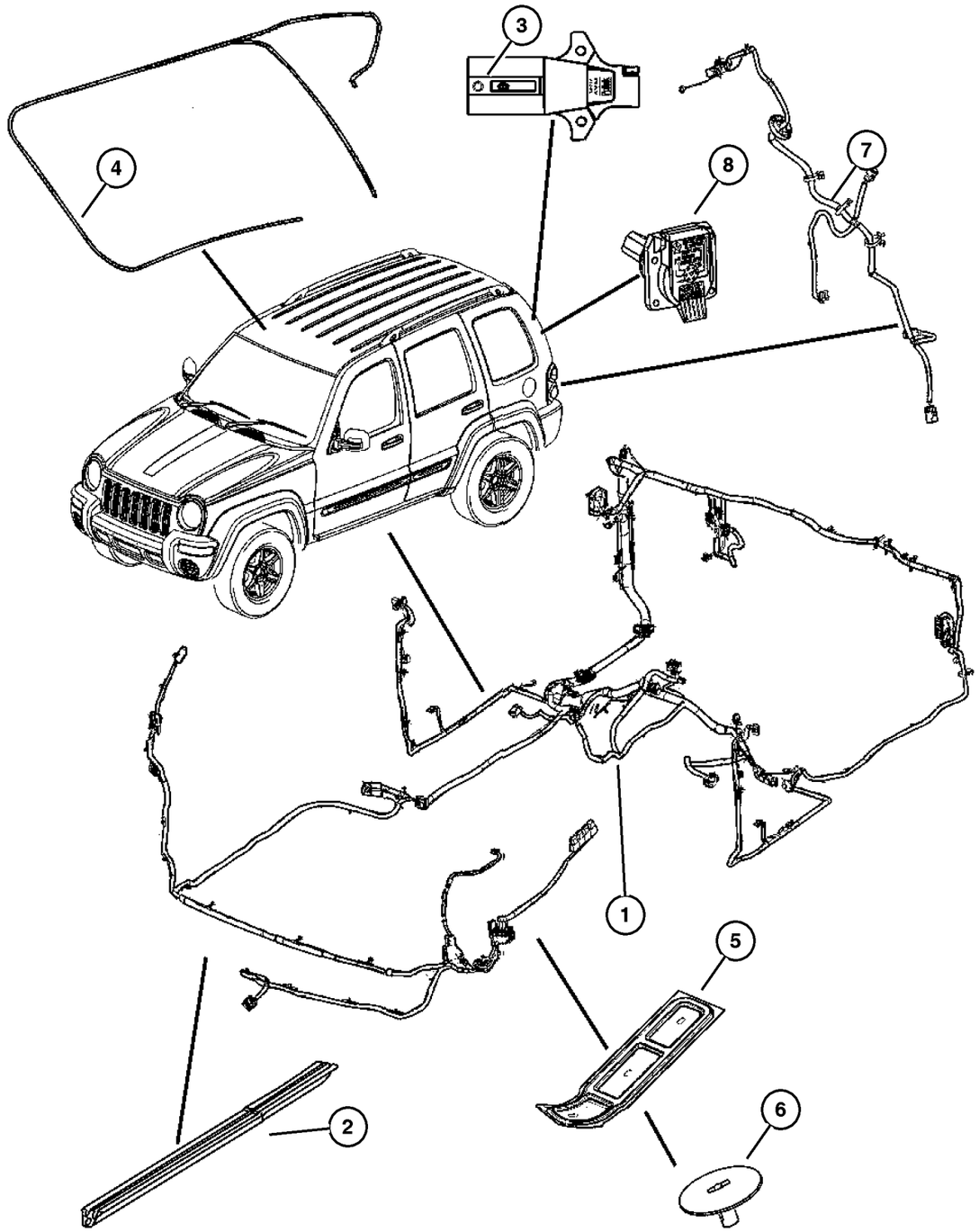

ITEM	PART NUMBER	QTY	LINE	SERIES	BODY	ENGINE	TRANS	TRIM	DESCRIPTION
Notes:									
[ED0] = 2.4L 4 Cylinder Engine									
[EK0] = 3.7L V6 Cylinder Engine									
[EN0] = 2.5L Diesel									
1									WIRING, Body
	56047 378AC	1	J, T						[JPT]
	56047 379AC	1	J, T						[JPT,AHT]
	56047 380AC	1	U						[JPM]
	56047 381AC	1	U						
	56047 382AC	1	U						[JPM,CGS]
	56047 383AC	1	U						[CGS]
	56050 844AC	1	J, T						[RCG]
	56050 845AC	1	J, T						[RCG,CGS]
	56050 846AC	1	J, T						[RCJ,JPS,BNB]
	56050 847AC	1	J, T						[AHT,GWA,CUD]
	56050 848AC	1	J, T						[CGS,JPS,BNB]
	56050 849AC	1	J, T						[CGS,AHT]
	56050 850AC	1	J, T						[JPM,CGS,GWA,ABE]
		1	J						[JPM,CGS], Export
	56050 851AC	1	J, T						[CGS,JPT,JPM]
	56050 852AC	1	J, T						[CGS,JPT,JPM,AHT]
	56050 853AC	1	J, T						[JPM,GWA,ABE,CUD]
		1	J						[JPM], Export
	56050 856AC	1	J, T						[JPT,JPM]
	56050 857AC	1	J, T						[JPT,JPM,AHT]
	56050 860AC	1	J, T						[CGS,JPT,GWA,ABE,CUD]
		1	J						[CGS], Export
	56050 861AC	1	J, T						[CGS,JPT]
	56050 864AC	1	J, T						[CGS,JPT,AHT]
	56050 865AC	1	J						Export
		1	J, T						[JPT,GWA,ABE,CUD]
2									COVER, Body Wiring
	56010 044AC	2	J, T						
		1	U						
3	5601 9823	1							ADAPTER, Trailer Tow
4									WIRING, Overhead Console
	4760 644	1	J, T						
		1	J, U						
	5166 454AA	1	J, T						[GWA]
		1	J, U						[GWA]
5									COVER, Wiring Protector
	56010 046AC	1							Right
	56010 047AC	1							Left

2006 Liberty (KJ)

SERIES	LINE	BODY	ENGINE	TRANSMISSION
H =HIGHLINE	T =JEEP - 2WD	74 =SPORT UTILITY 4-DR	EKG=3.7L V6 Eng.	DG6=4-Spd. Auto. 42RLE Trans.
M =MEDIUM	J =JEEP - 4WD		ENR=2.8L 4 Cyl Turbo Diesel Eng.	DGV=4-Spd. Auto. VLP Trans.
P =PREMIUM	U =JEEP - 4WD (RHD)		ENJ=2.5L 4 Cyl 16V Turbo Diesel Eng.	DGQ=5-Spd Auto. 5-45RFE Trans.
			ED1=2.4L 4 Cyl DOHC 16v SMPI Eng.	DEH=6-Speed Man. NSG370 Trans.
				DDD=5-Speed HD Man. Trans.
				DDK=5-Speed HD Man. Trans.

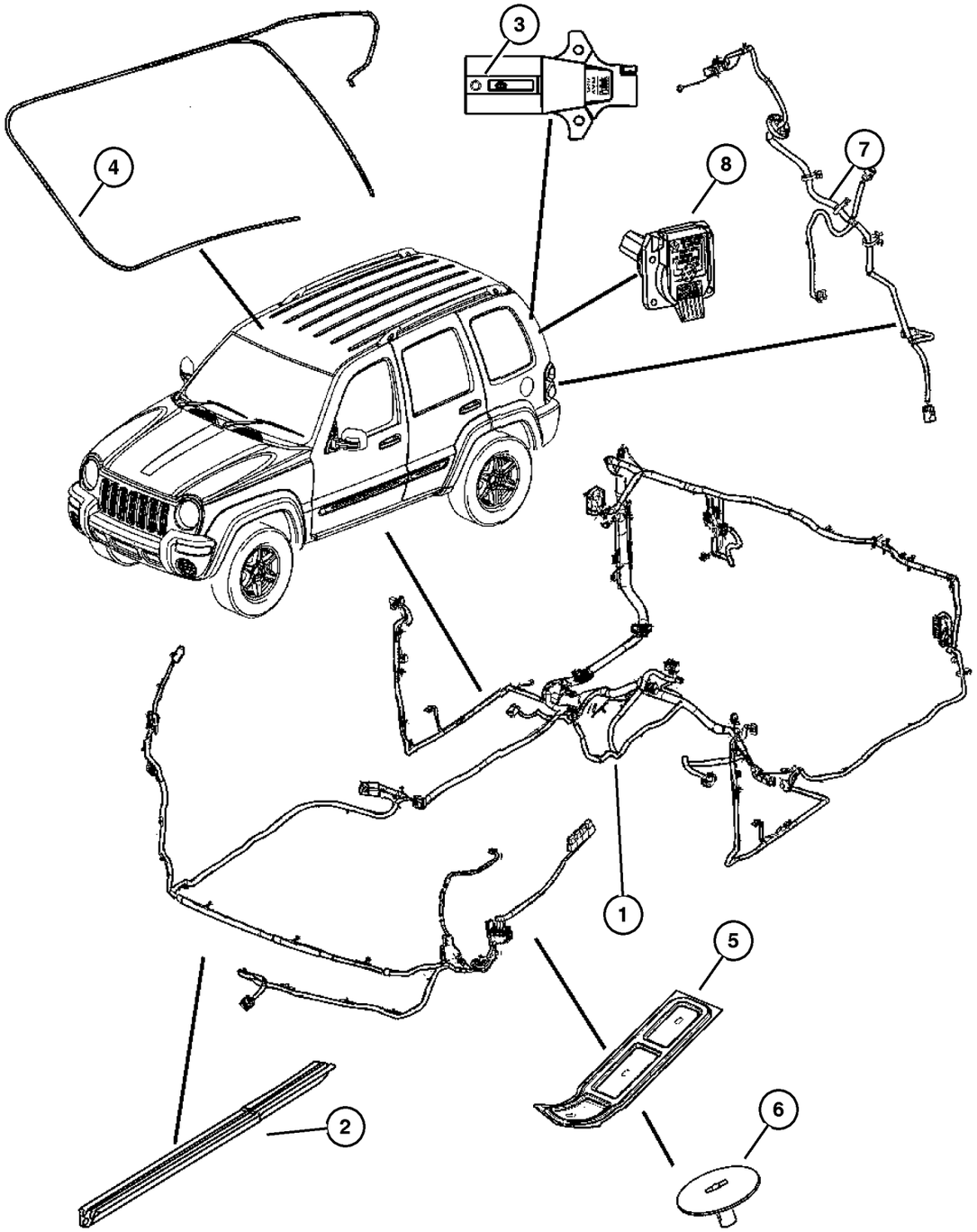

ITEM	PART NUMBER	QTY	LINE	SERIES	BODY	ENGINE	TRANS	TRIM	DESCRIPTION
6	56010 354AA	4							CLIP, Floor Pan Cover Button
7									WIRING, Fuel Tank
	56047 847AA	1				EN0			[BNB]
	56047 848AA	1				ED0,			[BNB]
						EK0			
		1				EK0			[BNB]
	56047 849AA	1				ED0,			
						EK0			
		1				EK0			
8	56038 366AB	1							CONNECTOR, 7 Way, Trailer tow
-9	5101 961AA-	1							WIRING, Sunroof

2006 Liberty (KJ)

SERIES	LINE	BODY	ENGINE	TRANSMISSION
H =HIGHLINE	T =JEEP - 2WD	74 =SPORT UTILITY 4-DR	EKG=3.7L V6 Eng.	DG6=4-Spd. Auto. 42RLE Trans.
M =MEDIUM	J =JEEP - 4WD		ENR=2.8L 4 Cyl Turbo Diesel Eng.	DGV=4-Spd. Auto. VLP Trans.
P =PREMIUM	U =JEEP - 4WD (RHD)		ENJ=2.5L 4 Cyl 16V Turbo Diesel Eng.	DGQ=5-Spd Auto. 5-45RFE Trans.
			ED1=2.4L 4 Cyl DOHC 16v SMPI Eng.	DEH=6-Speed Man. NSG370 Trans.
				DDD=5-Speed HD Man. Trans.
				DDK=5-Speed HD Man. Trans.

Wiring Doors and Tail Gate
Figure 008-1510

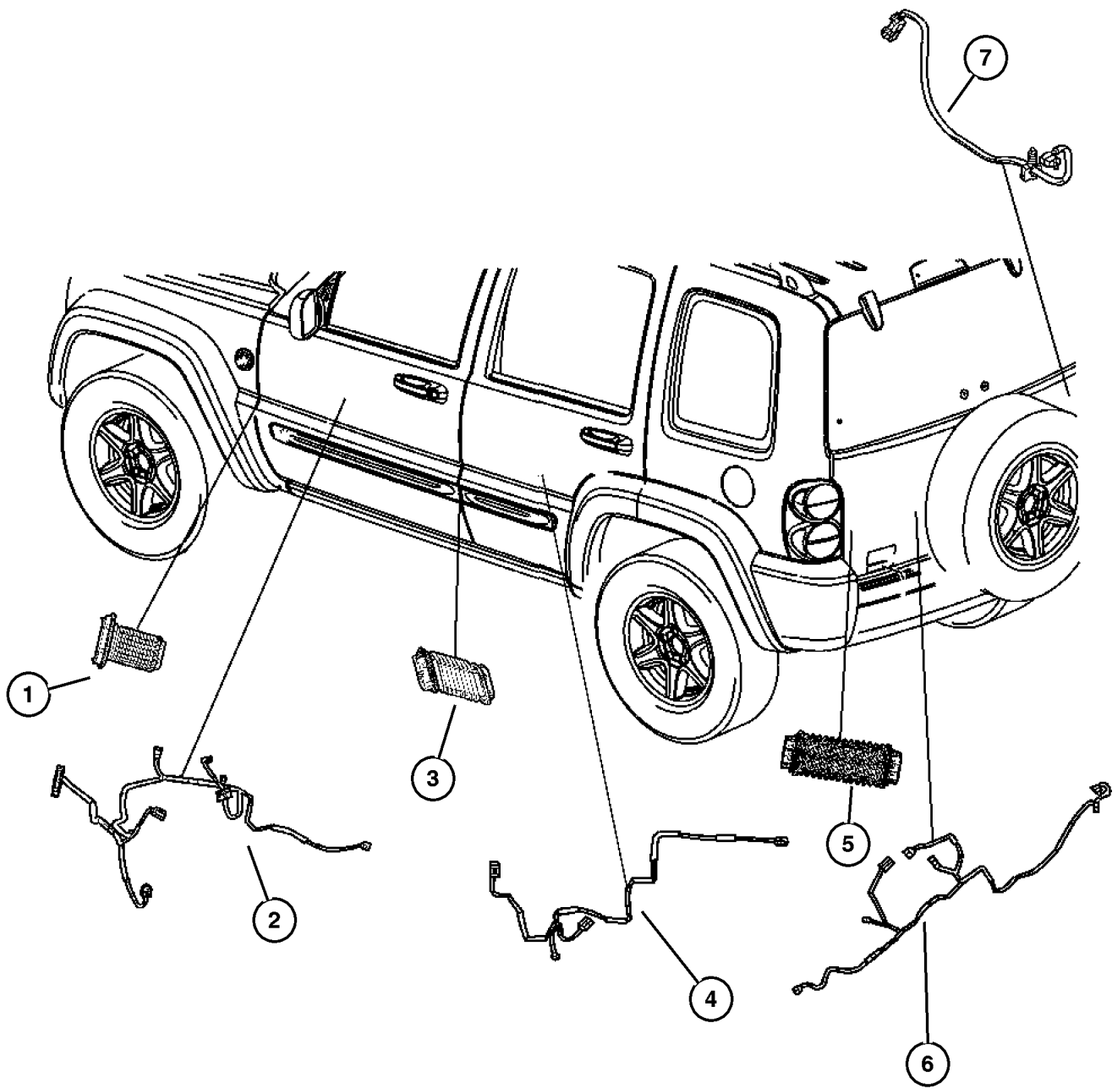

ITEM	PART NUMBER	QTY	LINE	SERIES	BODY	ENGINE	TRANS	TRIM	DESCRIPTION
1	56010 326AD	2							GROMMET, Door Wiring, Front door
2									WIRING, Front Door
	56050 556AC	1	J, T						[RCJ], Passenger
	56050 658AC	1	J, T						[JPY], Passenger
	56050 659AD	1	U						[RCJ], Driver
	56050 660AE	1	U						[RCJ], Passenger
	56050 669AD	1	U						[JPY,JPB,JPH,GVB], Driver
	56050 670AE	1	U						[JPY,JPB,JPH,GVB], Passenger
	56050 719AE	1	J, T						[JPY], Driver
	56050 721AE	1	J, T						[RCJ], Driver
3	56010 327AC	2							GROMMET, Door Wiring, Rear door
4	56050 615AC	2							WIRING, Rear Door
5	56010 328AA	1							GROMMET, Door Wiring
6									WIRING, Tailgate
	56050 510AB	1	J, T						
	56050 511AB	1	J, U						
7									WIRING, Power Door Lock
	5143 017AA	1	J, T						Swing gate. also contains micro switch
		1	J, U						Swing gate. also contains micro switch

2006 Liberty (KJ)

SERIES	LINE	BODY	ENGINE	TRANSMISSION
H =HIGHLINE	T =JEEP - 2WD	74 =SPORT UTILITY 4-DR	EKG=3.7L V6 Eng.	DG6=4-Spd. Auto. 42RLE Trans.
M =MEDIUM	J =JEEP - 4WD		ENR=2.8L 4 Cyl Turbo Diesel Eng.	DGV=4-Spd. Auto. VLP Trans.
P =PREMIUM	U =JEEP - 4WD (RHD)		ENJ=2.5L 4 Cyl 16V Turbo Diesel Eng.	DGQ=5-Spd Auto. 5-45RFE Trans.
			ED1=2.4L 4 Cyl DOHC 16v SMPI Eng.	DEH=6-Speed Man. NSG370 Trans.
				DDD=5-Speed HD Man. Trans.
				DDK=5-Speed HD Man. Trans.

Wiring Seats
Figure 008-1515

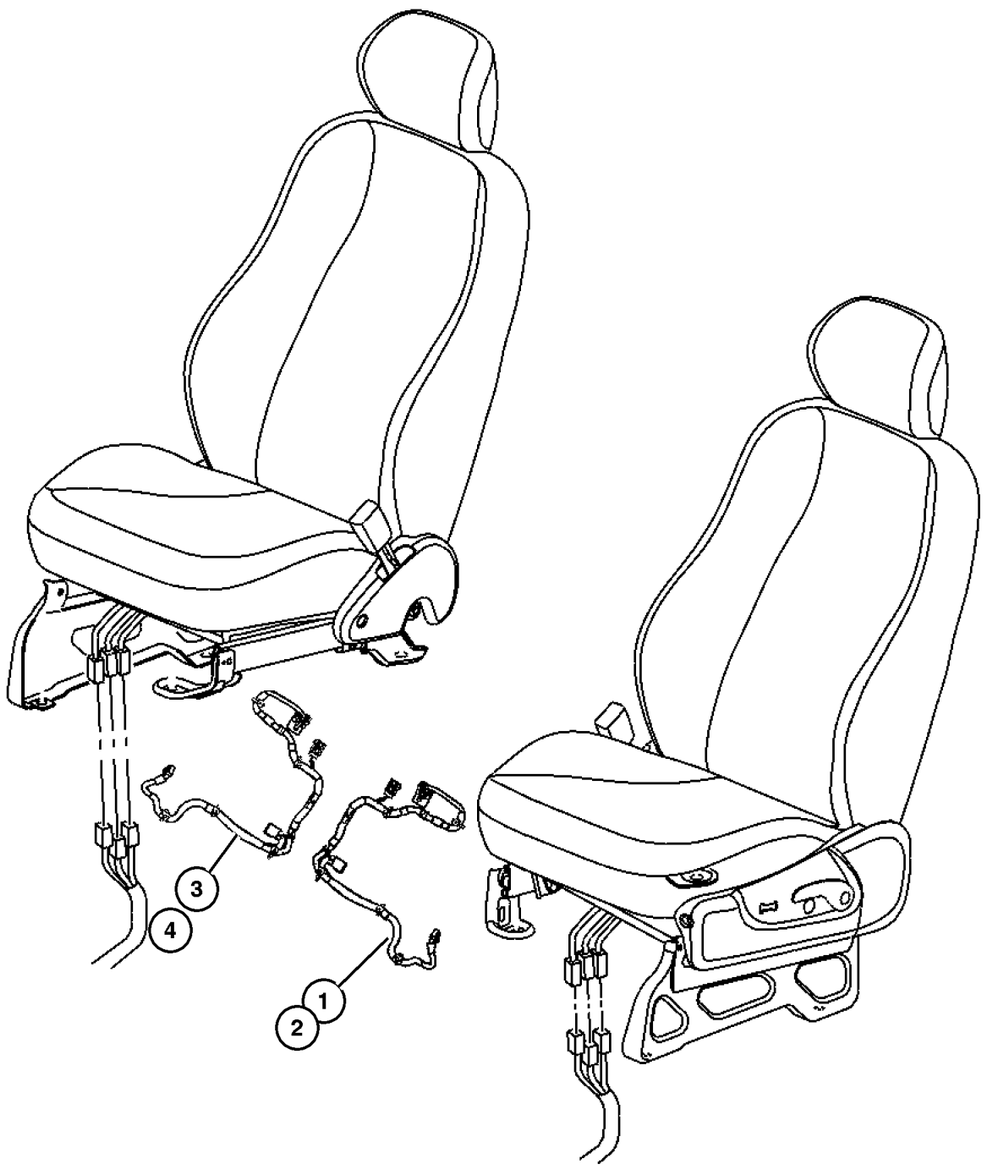

ITEM	PART NUMBER	QTY	LINE	SERIES	BODY	ENGINE	TRANS	TRIM	DESCRIPTION
1									WIRING, Seat
	5127 457AA	1	J, T						[CF5], Left
	5143 053AA	1	J, T						[CF5] With Traveling Inboard Seat Buckle, Left
		1	J, U						[CF5] With Traveling Inboard Seat Buckle, Left
2									WIRING, Power Seat
	5142 959AA	1	J, T						[CF5,JPT], Left
		1	J, U						[CF5,JPT], Left
	5143 005AA	1	J, T						[CF5,JPT,JPM], Left
		1	J, U						[CF5,JPT,JPM], Left
3									WIRING, Seat
	5127 460AA	1	J, T						[CF5] Mexico, Right
	5143 052AA	1	J, T						[CF5], Right
		1	J, U						[CF5], Right
	5143 082AA	1	J, T						[CF5] With Traveling Inboard Seat Belt Buckle, Right
4									WIRING, Power Seat
	5142 958AA	1	J, T						[CF5,JPT], Right
	5143 004AA	1	J, T						[CF5,JPT,JPM], Right
	5143 028AA	1	J, T						[CF5,JPT], Right,Export
		1	J, U						[CF5,JPT], Right,Export
	5143 034AA	1	J, T						[CF5,JPT,JPM], Right,Export
		1	J, U						[CF5,JPT,JPM], Right,Export

2006 Liberty (KJ)

SERIES	LINE	BODY	ENGINE	TRANSMISSION
H =HIGHLINE	T =JEEP - 2WD	74 =SPORT UTILITY 4-DR	EKG=3.7L V6 Eng.	DG6=4-Spd. Auto. 42RLE Trans.
M =MEDIUM	J =JEEP - 4WD		ENR=2.8L 4 Cyl Turbo Diesel Eng.	DGV=4-Spd. Auto. VLP Trans.
P =PREMIUM	U =JEEP - 4WD (RHD)		ENJ=2.5L 4 Cyl 16V Turbo Diesel Eng.	DGQ=5-Spd Auto. 5-45RFE Trans.
			ED1=2.4L 4 Cyl DOHC 16v SMPI Eng.	DEH=6-Speed Man. NSG370 Trans.
				DDD=5-Speed HD Man. Trans.
				DDK=5-Speed HD Man. Trans.

For Electrical Connector Repair Information visit the World Wide Web at

http://dto.vftis.com/mopar/disclaimer.asp

ITEM	PART NUMBER	QTY	LINE	SERIES	BODY	ENGINE	TRANS	TRIM	DESCRIPTION
Notes:									
[DG4] = All Multi Speed Automatic Transmissions									
-1									WIRING PACKAGE, Underhood Connector Repair, For Electrical Connector Repair Information visit the World Wide Web at http://dto. vftis.com/mopar/disclaimer.asp, (NOT SERVICED) (Not Serviced)
-2	5602 1384	2							CLIP, Wiring
-3									STRAP, Tie
	6016 155	3							
	5073 039AA-	1	J, U						
		1	U				DG0		

2006 Liberty (KJ)

SERIES	LINE	BODY	ENGINE	TRANSMISSION
H =HIGHLINE	T =JEEP - 2WD	74 =SPORT UTILITY 4-DR	EKG=3.7L V6 Eng.	DG6=4-Spd. Auto. 42RLE Trans.
M =MEDIUM	J =JEEP - 4WD		ENR=2.8L 4 Cyl Turbo Diesel Eng.	DGV=4-Spd. Auto. VLP Trans.
P =PREMIUM	U =JEEP - 4WD (RHD)		ENJ=2.5L 4 Cyl 16V Turbo Diesel Eng.	DGQ=5-Spd Auto. 5-45RFE Trans.
			ED1=2.4L 4 Cyl DOHC 16v SMPI Eng.	DEH=6-Speed Man. NSG370 Trans.
				DDD=5-Speed HD Man. Trans.
				DDK=5-Speed HD Man. Trans.

Air Bag Module and Sensors
Figure 008-1705

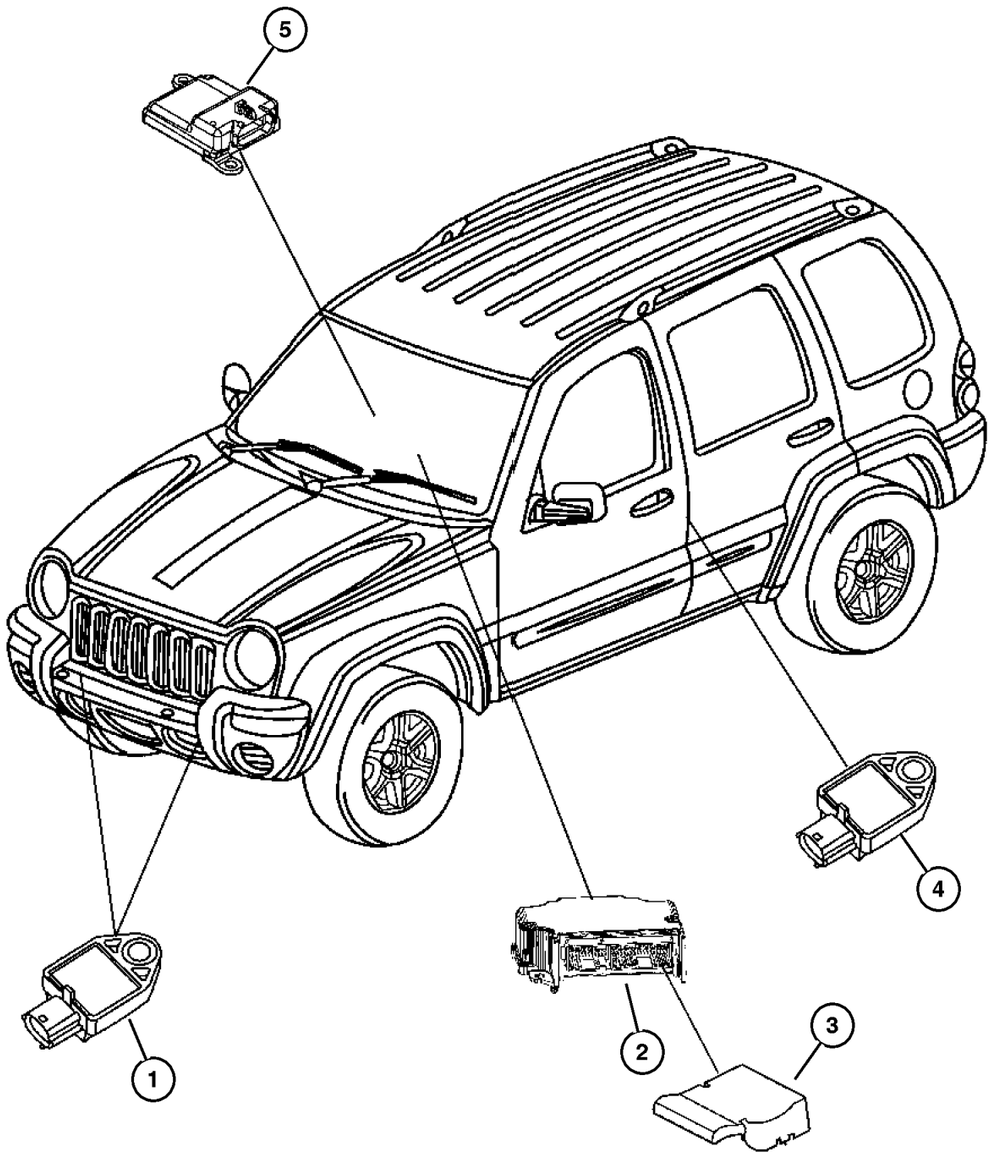

ITEM	PART NUMBER	QTY	LINE	SERIES	BODY	ENGINE	TRANS	TRIM	DESCRIPTION
1	5084 000AA	2							SENSOR, Air Bag
2									MODULE, Occupant Restraint
	4606 997AB	1							[CG1,CG3]
	4606 998AB	1							[CG1,CG3,CGS]
	4606 999AA	1							[CG1], Export
	4896 005AA	1							[CG1,CGS], Export
3	56038 787AB	1							COVER, Module
4	5084 000AA	2							SENSOR, Air Bag
5	55352 877AK	1	J, T						MODULE, Occupant Classification

2006 Liberty (KJ)

SERIES	LINE	BODY	ENGINE	TRANSMISSION
H =HIGHLINE	T =JEEP - 2WD	74 =SPORT UTILITY 4-DR	EKG=3.7L V6 Eng.	DG6=4-Spd. Auto. 42RLE Trans.
M =MEDIUM	J =JEEP - 4WD		ENR=2.8L 4 Cyl Turbo Diesel Eng.	DGV=4-Spd. Auto. VLP Trans.
P =PREMIUM	U =JEEP - 4WD (RHD)		ENJ=2.5L 4 Cyl 16V Turbo Diesel Eng.	DGQ=5-Spd Auto. 5-45RFE Trans.
			ED1=2.4L 4 Cyl DOHC 16v SMPI Eng.	DEH=6-Speed Man. NSG370 Trans.
				DDD=5-Speed HD Man. Trans.
				DDK=5-Speed HD Man. Trans.

Air Bags and Clock Spring
Figure 008-1710

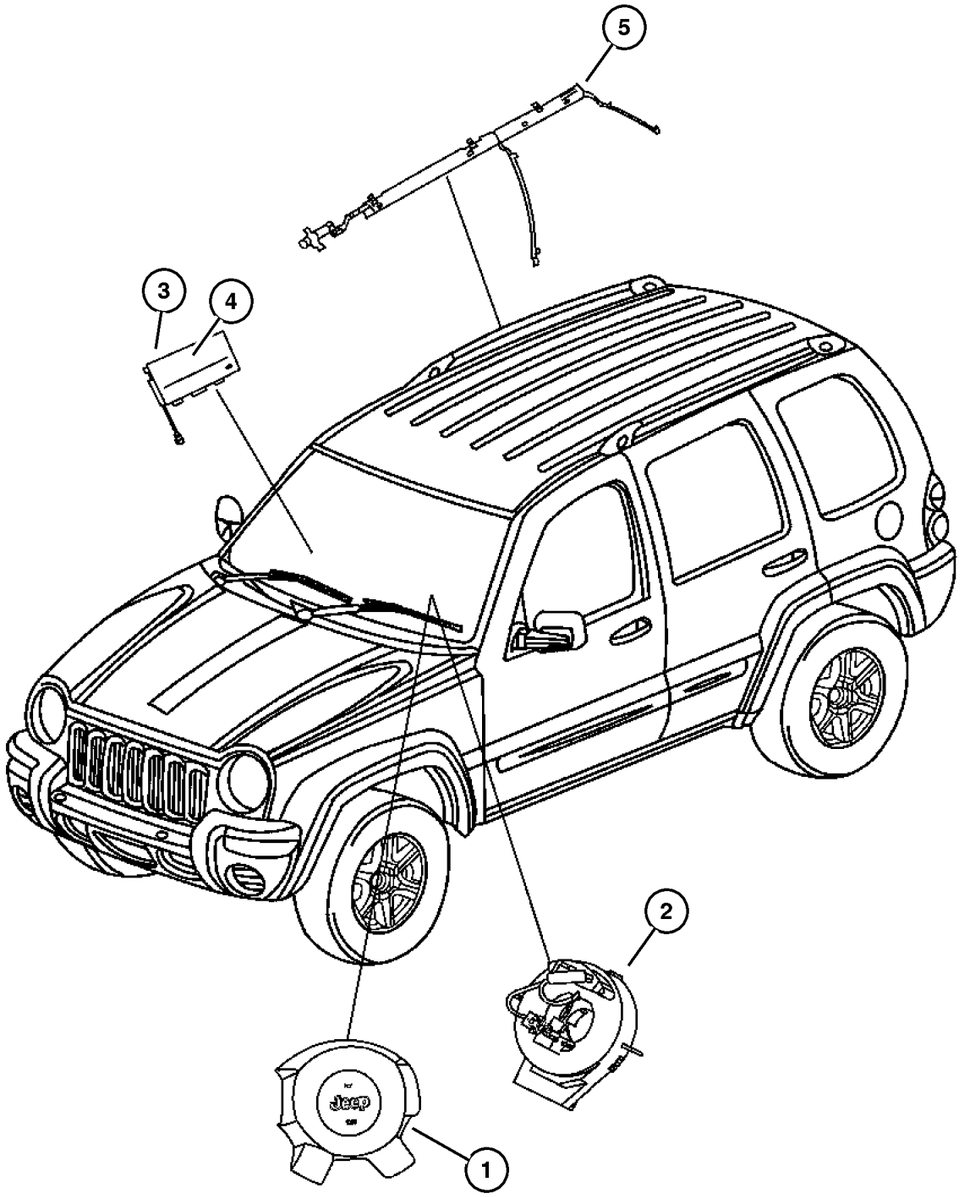

ITEM	PART NUMBER	QTY	LINE	SERIES	BODY	ENGINE	TRANS	TRIM	DESCRIPTION
1									AIR BAG, Driver
	5JS06 1DHAE	1		M, P					[D5]
		1		M, P					[DB]
	5JS06 1J8AE	1		M, P					[J1]
		1		M, P					[J3]
	5JS06 1X9AE	1		H					
2									CLOCKSPRING
	56010 619AC	1							[BNB]
	56044 886AC	1							
3	55315 103AE	1							AIR BAG, Passenger
4									DOOR, Passenger Air Bag
	WD14 XDHAC	1	U						[D5]
		1	U						[DB]
	WD14 ZJ8AC	1	U						[J1]
		1	U						[J3]
	ZE70 WL8AB	1	J, T						[D5][XCA]
		1	J, T						[DB][XCA]
		1	J, T						[J1][XCA]
		1	J, T						[J3][XCA]
	5HZ98 XDHAC	1	J, T						[D5] Mexico
		1	J, T						[DB] Mexico
		1	J, T						[D5], Export
		1	J, T						[DB], Export
	5HZ98 ZJ8AC	1	J, T						[J1]Mexico
		1	J, T						J3]Mexico
		1	J, T						[J1], Export
		1	J, T						J3], Export
5									AIR BAG, Side Curtain
	55315 098AC	1							Right
	55315 099AC	1							Left

2006 Liberty (KJ)

SERIES	LINE	BODY	ENGINE	TRANSMISSION
H =HIGHLINE	T =JEEP - 2WD	74 =SPORT UTILITY 4-DR	EKG=3.7L V6 Eng.	DG6=4-Spd. Auto. 42RLE Trans.
M =MEDIUM	J =JEEP - 4WD		ENR=2.8L 4 Cyl Turbo Diesel Eng.	DGV=4-Spd. Auto. VLP Trans.
P =PREMIUM	U =JEEP - 4WD (RHD)		ENJ=2.5L 4 Cyl 16V Turbo Diesel Eng.	DGQ=5-Spd Auto. 5-45RFE Trans.
			ED1=2.4L 4 Cyl DOHC 16v SMPI Eng.	DEH=6-Speed Man. NSG370 Trans.
				DDD=5-Speed HD Man. Trans.
				DDK=5-Speed HD Man. Trans.

Spark Plug - Coil
Figure 008-1905

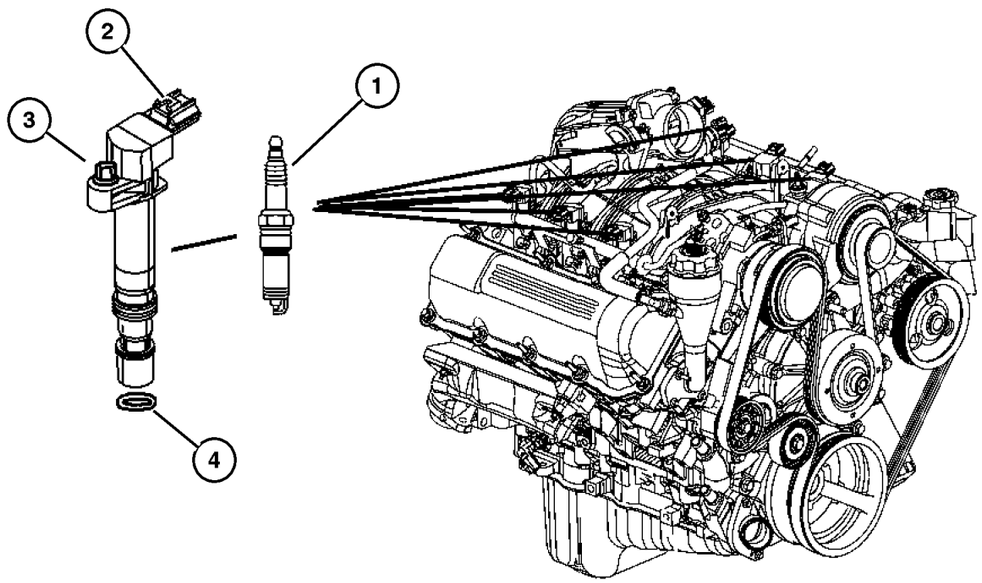

ITEM	PART NUMBER	QTY	LINE	SERIES	BODY	ENGINE	TRANS	TRIM	DESCRIPTION
1	SPZF R6F11G	6				EK0			SPARK PLUG
2	56028 138AF	6				EK0			COIL, Ignition
3									NUT, Coil mounting M6X1.00, (NOT SERVICED) (Not Serviced)
4	5072 382AA	6				EK0			O RING, Coil

2006 Liberty (KJ)

SERIES	LINE	BODY	ENGINE	TRANSMISSION
H =HIGHLINE	T =JEEP - 2WD	74 =SPORT UTILITY 4-DR	EKG=3.7L V6 Eng.	DG6=4-Spd. Auto. 42RLE Trans.
M =MEDIUM	J =JEEP - 4WD		ENR=2.8L 4 Cyl Turbo Diesel Eng.	DGV=4-Spd. Auto. VLP Trans.
P =PREMIUM	U =JEEP - 4WD (RHD)		ENJ=2.5L 4 Cyl 16V Turbo Diesel Eng.	DGQ=5-Spd Auto. 5-45RFE Trans.
			ED1=2.4L 4 Cyl DOHC 16v SMPI Eng.	DEH=6-Speed Man. NSG370 Trans.
				DDD=5-Speed HD Man. Trans.
				DDK=5-Speed HD Man. Trans.

Glow Plugs
Figure 008-1910

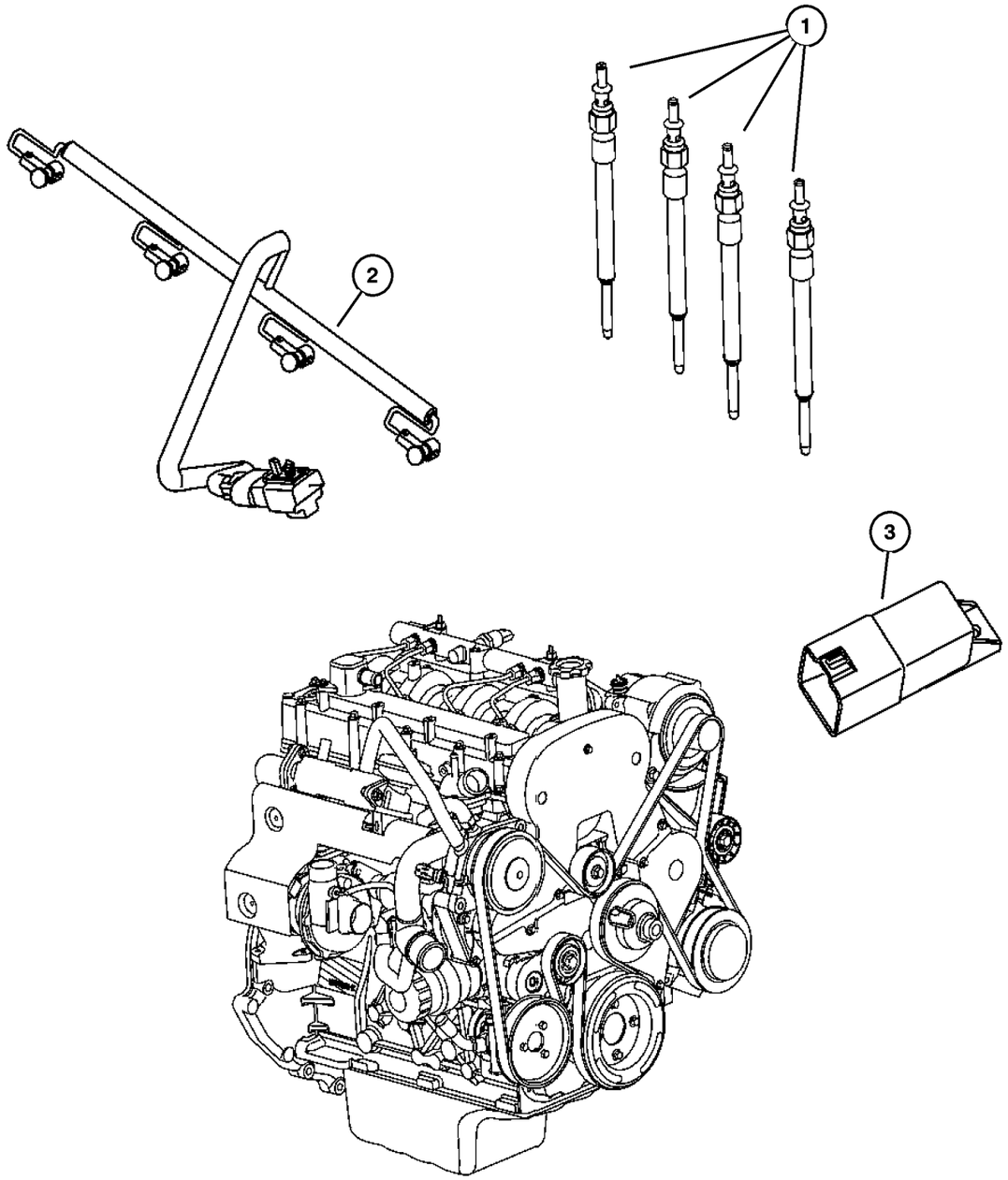

ITEM	PART NUMBER	QTY	LINE	SERIES	BODY	ENGINE	TRANS	TRIM	DESCRIPTION
1									PLUG, Glow
	5142 577AA	4				EN0	DG0		
		4				EN0	DBB		
2									WIRE, Glow Plug
	5142 576AA	1				EN0	DG0		
		1				EN0	DBB		
3	56044 671AA	1				EN0			MODULE, Glow Plug

2006 Liberty (KJ)

SERIES	LINE	BODY	ENGINE	TRANSMISSION
H =HIGHLINE	T =JEEP - 2WD	74 =SPORT UTILITY 4-DR	EKG=3.7L V6 Eng.	DG6=4-Spd. Auto. 42RLE Trans.
M =MEDIUM	J =JEEP - 4WD		ENR=2.8L 4 Cyl Turbo Diesel Eng.	DGV=4-Spd. Auto. VLP Trans.
P =PREMIUM	U =JEEP - 4WD (RHD)		ENJ=2.5L 4 Cyl 16V Turbo Diesel Eng.	DGQ=5-Spd Auto. 5-45RFE Trans.
			ED1=2.4L 4 Cyl DOHC 16v SMPI Eng.	DEH=6-Speed Man. NSG370 Trans.
				DDD=5-Speed HD Man. Trans.
				DDK=5-Speed HD Man. Trans.

Group – 08A

Instrument Panel and Radios and Consoles

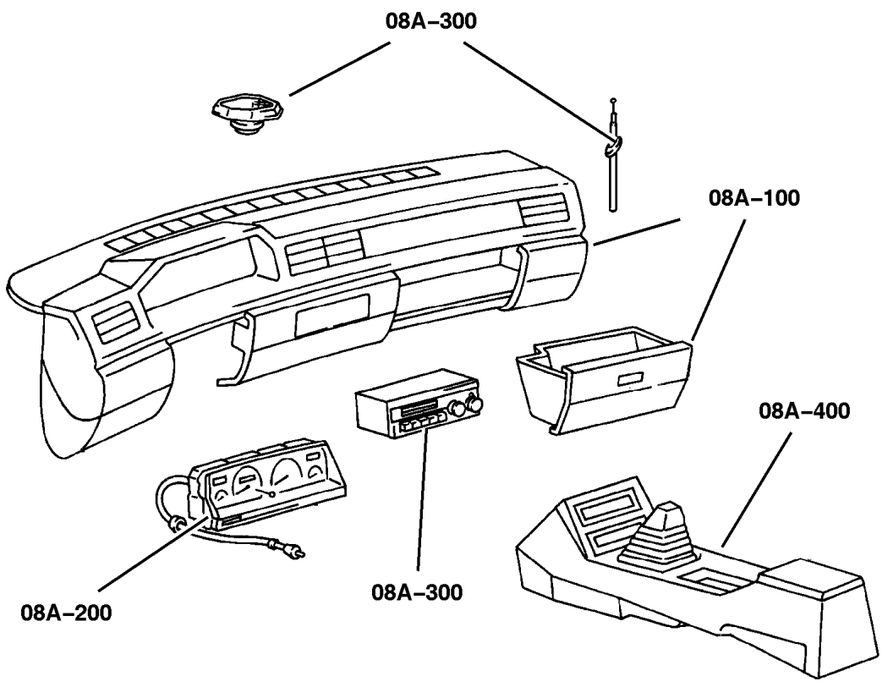

08A–100	08A–200	08A–300	08A–400
Instrument Panel	Instrument Panel Cluster	Radio, Antenna, and Speakers	Consoles
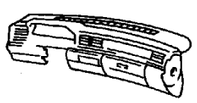	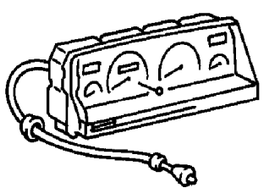	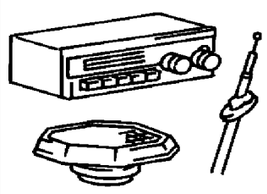	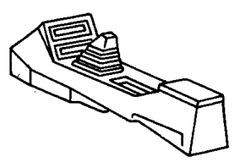

GROUP 8A - Instrument Panel and Radios and Consoles

Illustration Title — Group-Fig. No.

Instrument Panel
Instrument Panel . . . . . Fig. 08A-110

Instrument Panel Cluster
Instrument Panel Cluster . . . . . Fig. 08A-210

Radio, Antenna, and Speakers
Radios . . . . . Fig. 08A-310
Speakers . . . . . Fig. 08A-320
Antenna . . . . . Fig. 08A-330

Consoles
Console, Overhead . . . . . Fig. 08A-410
Console, Floor . . . . . Fig. 08A-420

Instrument Panel
Figure 08A-110

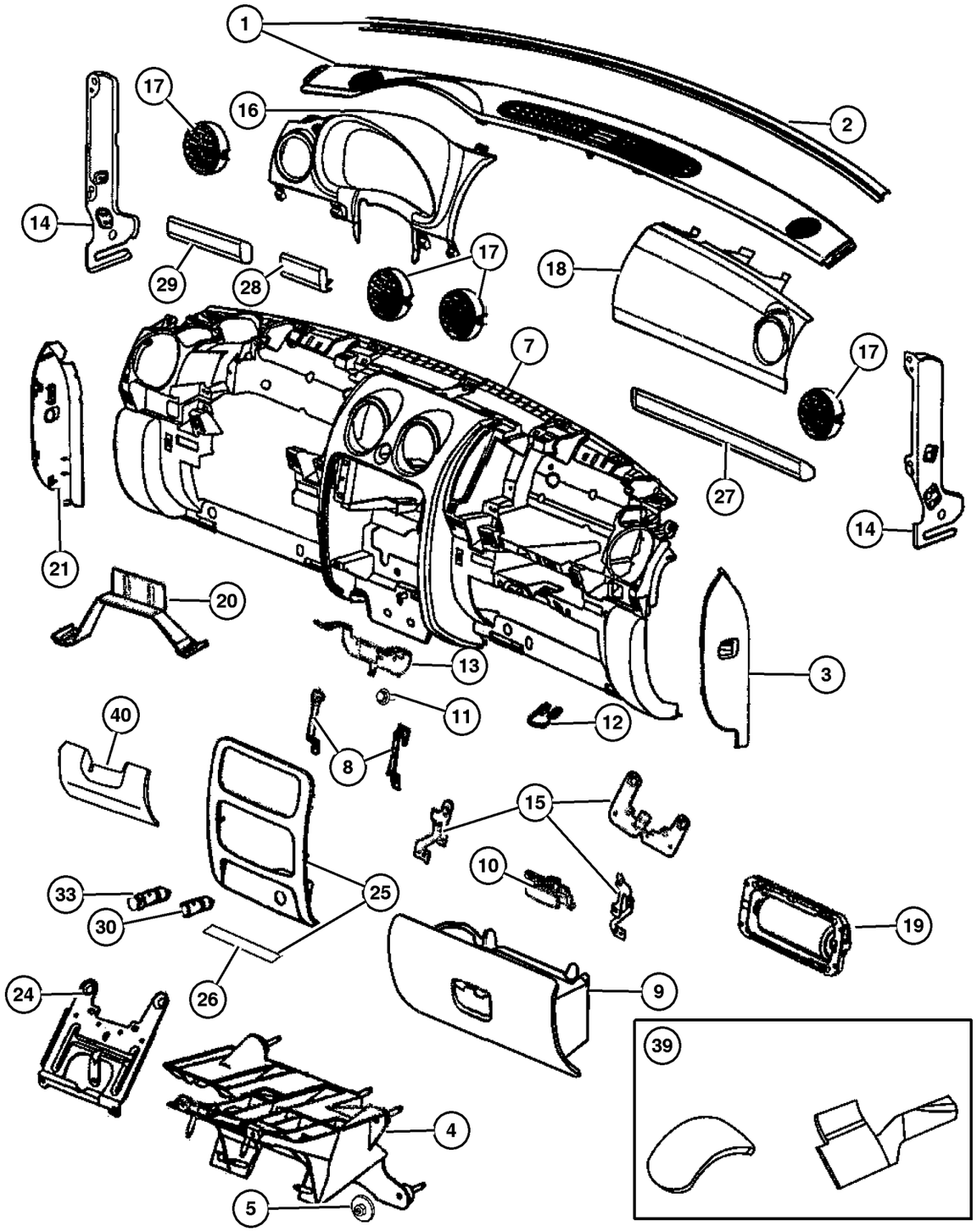

ITEM	PART NUMBER	QTY	LINE	SERIES	BODY	ENGINE	TRANS	TRIM	DESCRIPTION
1									COVER, Instrument Panel
	5GD54 XDHAE	1	J, T						[D5]
		1	J, T						[D8]
	5GD54 ZJ8AE	1	J, T						[J1]
		1	J, T						[J3]
2									SEAL, Instrument Panel, (NOT SERVICED) (Not Serviced)
3									COVER, Instrument Panel Opening
	5GN55 XDHAD	1	J, T						[D5]
		1	J, T						[D8]
	5GN55 ZJ8AD	1	J, T						[J1]
		1	J, T						[J3]
4									BRACKET, Steering Column
	55314 987AB	1	J, T						Comes with 11 Studs, Lower
	55314 988AB	1	U						Comes with 11 Studs, Lower
5	6506 232AA	2							NUT
-6									SCREW, M6x1x20
	6101 826	2							To Upper Support Bracket, Steering Column Lower
		2							Support Bracket to Instrument Panel, Steering Column Lower
7									PANEL, Instrument
	ZE85 XDHAC	1	J, T						[D5][XCA]
		1	J, T						[DB][XCA]
	ZE85 ZJ8AC	1	J, T						[J1][XCA]
		1	J, T						[J3][XCA]
	ZE87 XDHAC	1	U						[D5]
		1	U						[DB]
	ZE87 ZJ8AC	1	U						[J1]
		1	U						[J3]
	5JX85 XDHAC	1	J, T						[D5]
		1	J, T						[DB]
	5JX85 ZJ8AC	1	J, T						[J1]
		1	J, T						[J3]
8									BRACKET, Radio
	5072 596AA	1	J, T						
		1	U						
9									GLOVE BOX, Instrument Panel
	ZE71 XDHAB	1	J, T						[D5]
		1	J, T						[DB]
		1	U						[D5]
		1	U						[DB]

2006 Liberty (KJ)

SERIES	LINE	BODY	ENGINE	TRANSMISSION
H =HIGHLINE	T =JEEP - 2WD	74 =SPORT UTILITY 4-DR	EKG=3.7L V6 Eng.	DG6=4-Spd. Auto. 42RLE Trans.
M =MEDIUM	J =JEEP - 4WD		ENR=2.8L 4 Cyl Turbo Diesel Eng.	DGV=4-Spd. Auto. VLP Trans.
P =PREMIUM	U =JEEP - 4WD (RHD)		ENJ=2.5L 4 Cyl 16V Turbo Diesel Eng.	DGQ=5-Spd Auto. 5-45RFE Trans.
			ED1=2.4L 4 Cyl DOHC 16v SMPI Eng.	DEH=6-Speed Man. NSG370 Trans.
				DDD=5-Speed HD Man. Trans.
				DDK=5-Speed HD Man. Trans.

AR = Use as required - = Non illustrated part # = New this model year

Instrument Panel
Figure 08A-110

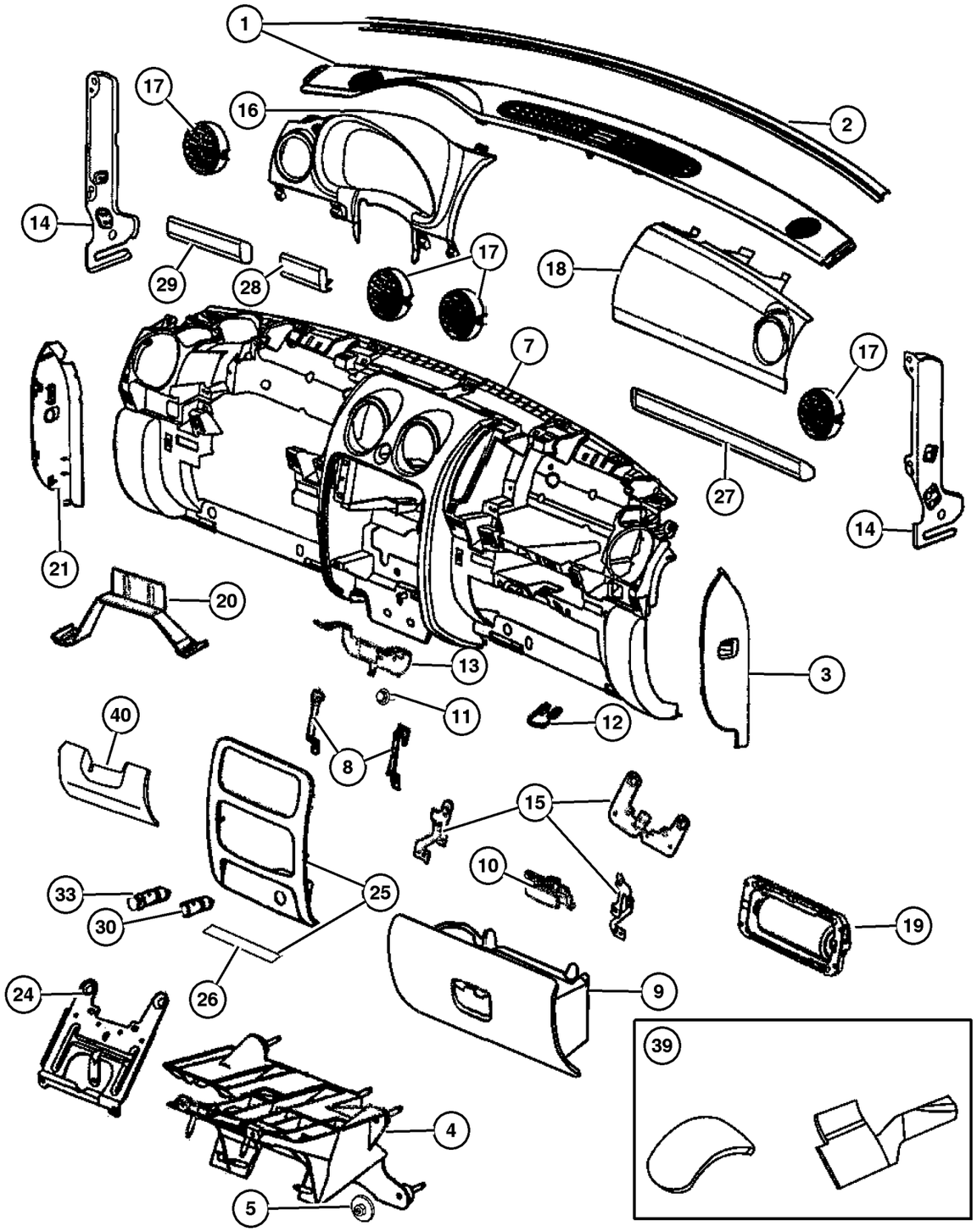

ITEM	PART NUMBER	QTY	LINE	SERIES	BODY	ENGINE	TRANS	TRIM	DESCRIPTION
	ZE71 ZJ8AB	1	J, T						[J1]
		1	J, T						[J3]
		1	U						[J1]
		1	U						[J3]
10									LATCH, Glovebox Door
	WQ54 XDHAA	1	J, T						[D5]
		1	J, T						[DB]
		1	U						[D5]
		1	U						[DB]
	WQ54 ZJ8AA	1	J, T						[J1]
		1	J, T						[J3]
		1	U						[J1]
		1	U						[J3]
11	6101 945	4							SCREW
12									STRIKER, Glove Box Door Latch
	5072 605AA	1	J, T						
		1	U						
13									BRACKET, Audio Equipment
	5072 606AA	1	J, T						
		1	U						
14									BRACKET, Instrument Panel
	5073 523AA	1	J, T						Right end
	56052 063AB	1	U						Right end
	56052 064AC	1	J, T						Left end
		1	U						Left end
15									BRACKET, Air Bag
	56052 057AB	1	J, T						Center
	56052 058AB	1	U						Center
	56052 059AB	1	J, T						Left
	56052 060AB	1	U						Inboard
	56052 061AB	1	J, T						Inboard
	56052 062AB	1	U						Left
16									BEZEL, Cluster
	WD13 XDHAA	1	U						[D5]
		1	U						[DB]
	WD13 ZJ8AA	1	U						[J1]
		1	U						[J3]
	5JA36 XDHAB	1	J, T						[D5]
		1	J, T						[DB]
	5JA36 ZJ8AB	1	J, T						[J1]
		1	J, T						[J3]
17									OUTLET, Air Conditioning & Heater

2006 Liberty (KJ)

SERIES	LINE	BODY	ENGINE	TRANSMISSION
H =HIGHLINE	T =JEEP - 2WD	74 =SPORT UTILITY 4-DR	EKG=3.7L V6 Eng.	DG6=4-Spd. Auto. 42RLE Trans.
M =MEDIUM	J =JEEP - 4WD		ENR=2.8L 4 Cyl Turbo Diesel Eng.	DGV=4-Spd. Auto. VLP Trans.
P =PREMIUM	U =JEEP - 4WD (RHD)		ENJ=2.5L 4 Cyl 16V Turbo Diesel Eng.	DGQ=5-Spd Auto. 5-45RFE Trans.
			ED1=2.4L 4 Cyl DOHC 16v SMPI Eng.	DEH=6-Speed Man. NSG370 Trans.
				DDD=5-Speed HD Man. Trans.
				DDK=5-Speed HD Man. Trans.

Instrument Panel
Figure 08A-110

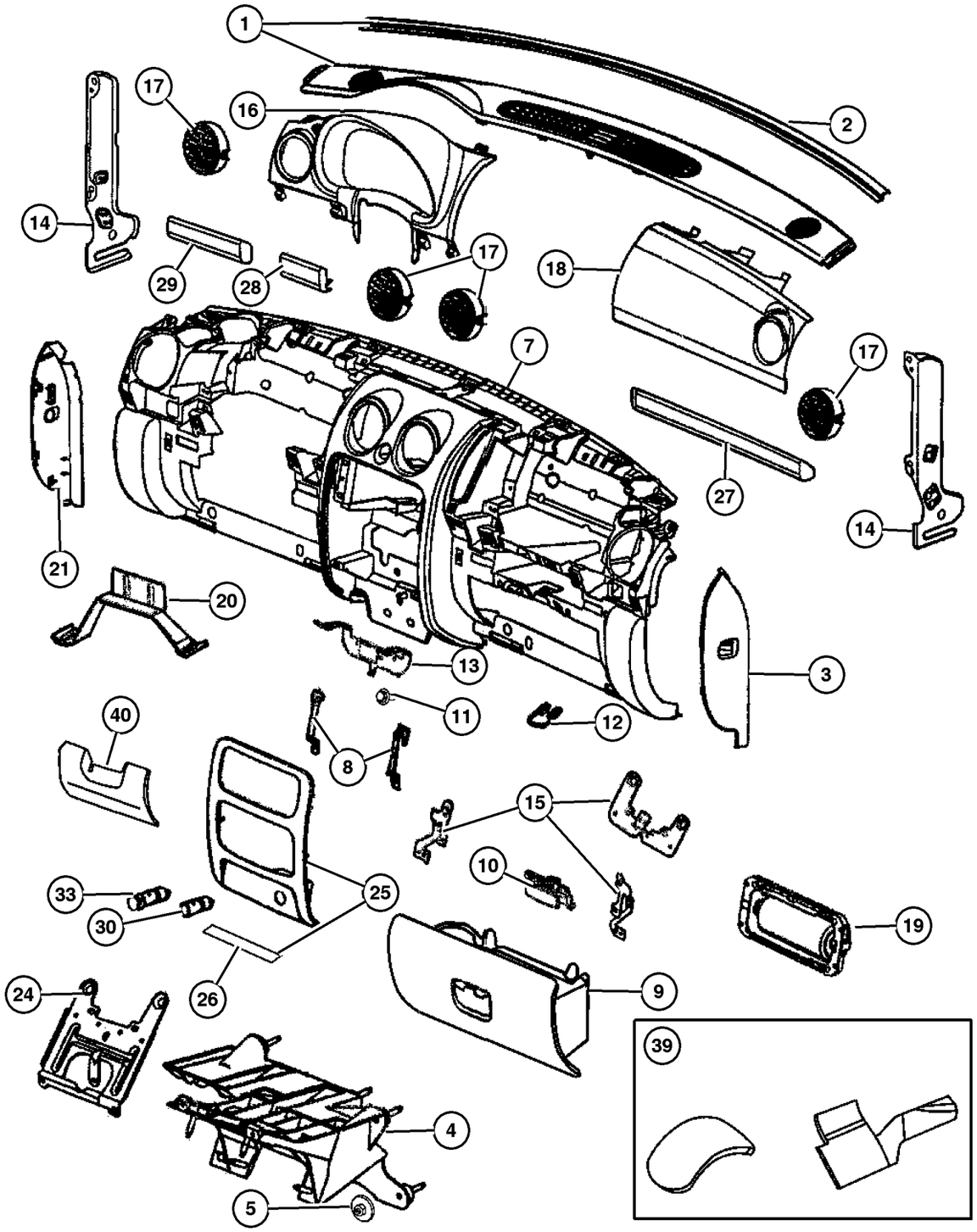

ITEM	PART NUMBER	QTY	LINE	SERIES	BODY	ENGINE	TRANS	TRIM	DESCRIPTION
	WC88 DX9AC	4		H, M					
	WC88 XDHAC	4		P					
18									DOOR, Passenger Air Bag, Air Outlet Included (Heat Staked)
	WD14 XDHAC	1	U						[D5]
		1	U						[DB]
	WD14 ZJ8AC	1	U						[J1]
		1	U						[J3]
	ZE70 ZJ8AB	1	J, T						[J1][XCA]
	ZE70 WL8AB	1	J, T						[D5][XCA]
		1	J, T						[DB][XCA]
		1	J, T						[J3][XCA]
	5HZ98 XDHAC	1	J, T						[D5]
		1	J, T						[DB]
	5HZ98 ZJ8AC	1	J, T						[J1]
		1	J, T						[J3]
19	55315 103AE	1							AIR BAG, Passenger
20	55037 453AC	1							BRACKET, Instrument Panel
21									COVER, Fuse Access
	5GK18 XDHAD	1	U						[D5]
		1	U						[DB]
	5GK18 ZJ8AD	1	U						[J1]
		1	U						[J3]
	5GK19 XDHAD	1	J, T						[D5]
		1	J, T						[DB]
	5GK19 ZJ8AD	1	J, T						[J1]
		1	J, T						[J3]
-22									PULLER, Fuse
	5072 937AA-	1	U						
		1	J, T						
-23									PANEL, Knee Blocker
	5JF63 XDHAC-	1							[D5]
		1							[DB]
	5JF63 ZJ8AC-	1							[J1]
		1							[J3]
24									BRACKET, Steering Column
	55314 992AB	1	J, T						Upper, Left Hand Drive
	55315 011AB	1	U						Upper, Right Hand Drive
25									BEZEL, Instrument Panel, Center
	5KD13 DX9AB	1		H					Center
	1AX30 AAAAA	1		M					
	5KC22 XZAAA	1		P					
26	55116 992AA	1							PAD, Instrument Panel

2006 Liberty (KJ)

SERIES	LINE	BODY	ENGINE	TRANSMISSION
H =HIGHLINE	T =JEEP - 2WD	74 =SPORT UTILITY 4-DR	EKG=3.7L V6 Eng.	DG6=4-Spd. Auto. 42RLE Trans.
M =MEDIUM	J =JEEP - 4WD		ENR=2.8L 4 Cyl Turbo Diesel Eng.	DGV=4-Spd. Auto. VLP Trans.
P =PREMIUM	U =JEEP - 4WD (RHD)		ENJ=2.5L 4 Cyl 16V Turbo Diesel Eng.	DGQ=5-Spd Auto. 5-45RFE Trans.
			ED1=2.4L 4 Cyl DOHC 16v SMPI Eng.	DEH=6-Speed Man. NSG370 Trans.
				DDD=5-Speed HD Man. Trans.
				DDK=5-Speed HD Man. Trans.

AR = Use as required - = Non illustrated part # = New this model year

Instrument Panel
Figure 08A-110

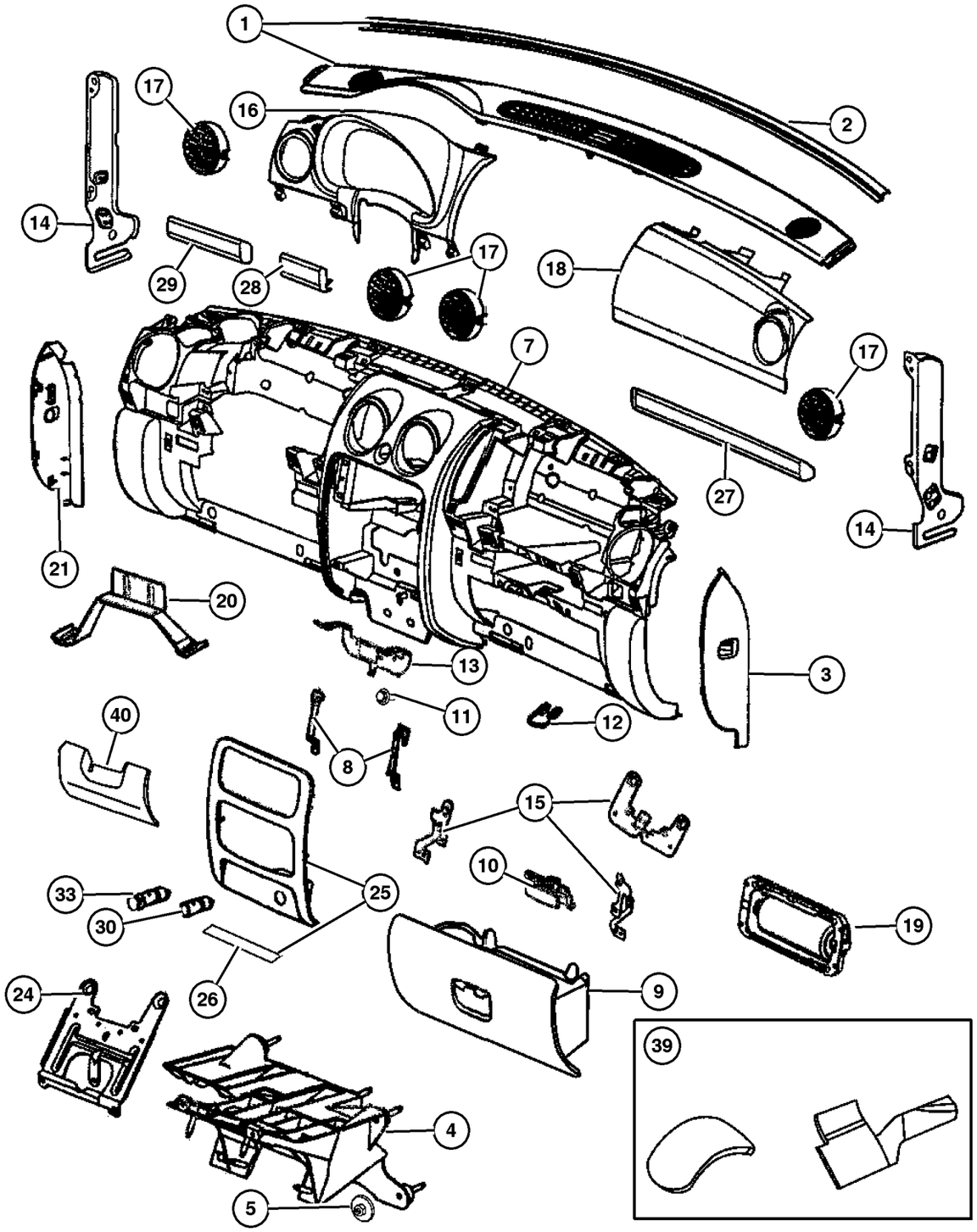

ITEM	PART NUMBER	QTY	LINE	SERIES	BODY	ENGINE	TRANS	TRIM	DESCRIPTION
27									BEZEL, Instrument Panel
	5KD06 XDHAA	1	J, T						[D5]
		1	J, T						[DB]
	5KD06 ZJ8AA	1	J, T						[J1]
		1	J, T						[J3]
	5KD12 XDHAA	1	U						[D5]
		1	U						[DB]
	5KD12 ZJ8AA	1	U						[J1]
		1	U						[J3]
28									BEZEL, Instrument Panel
	5KD05 XDHAA	1	J, T						[D5]
		1	J, T						[DB]
	5KD05 ZJ8AA	1	J, T						[J1]
		1	J, T						[J3]
	5KD10 XDHAA	1	U						[D5]
		1	U						[DB]
	5KD10 ZJ8AA	1	U						[J1]
		1	U						[J3]
29									BEZEL, Instrument Panel
	5KD08 XDHAA	1	U						[D5]
		1	U						[DB]
	5KD08 ZJ8AA	1	U						[J1]
		1	U						[J3]
	5KD09 XDHAA	1	U						[D5][LNS]
		1	U						[DB][LNS]
	5KD09 ZJ8AA	1	U						[J1][LNS]
		1	U						[J3][LNS]
	5KE15 XDHAA	1	J, T						[D5]
		1	J, T						[DB]
	5KE15 ZJ8AA	1	J, T						[J1]
		1	J, T						[J3]
	5KE16 XDHAA	1	J, T						[D5][LNJ]
		1	J, T						[DB][LNJ]
	5KE16 ZJ8AA	1	J, T						[J1][LNJ]
		1	J, T						[J3][LNJ]
30	4793 554AB	1							POWER OUTLET
-31	56010 621AA-	1							MOUNT, Power Outlet
-32	4685 590	1							BASE, Cigar Lighter
33	4685 536	1							KNOB AND ELEMENT, Cigar Lighter
-34	4793 555	1							RING, Cigar Lighter Mounting
-35									PANEL, CLOSEOUT
	55352 786AF-	1	J, T						Right

2006 Liberty (KJ)

SERIES	LINE	BODY	ENGINE	TRANSMISSION
H =HIGHLINE	T =JEEP - 2WD	74 =SPORT UTILITY 4-DR	EKG=3.7L V6 Eng.	DG6=4-Spd. Auto. 42RLE Trans.
M =MEDIUM	J =JEEP - 4WD		ENR=2.8L 4 Cyl Turbo Diesel Eng.	DGV=4-Spd. Auto. VLP Trans.
P =PREMIUM	U =JEEP - 4WD (RHD)		ENJ=2.5L 4 Cyl 16V Turbo Diesel Eng.	DGQ=5-Spd Auto. 5-45RFE Trans.
			ED1=2.4L 4 Cyl DOHC 16v SMPI Eng.	DEH=6-Speed Man. NSG370 Trans.
				DDD=5-Speed HD Man. Trans.
				DDK=5-Speed HD Man. Trans.

AR = Use as required - = Non illustrated part # = New this model year

Instrument Panel
Figure 08A-110

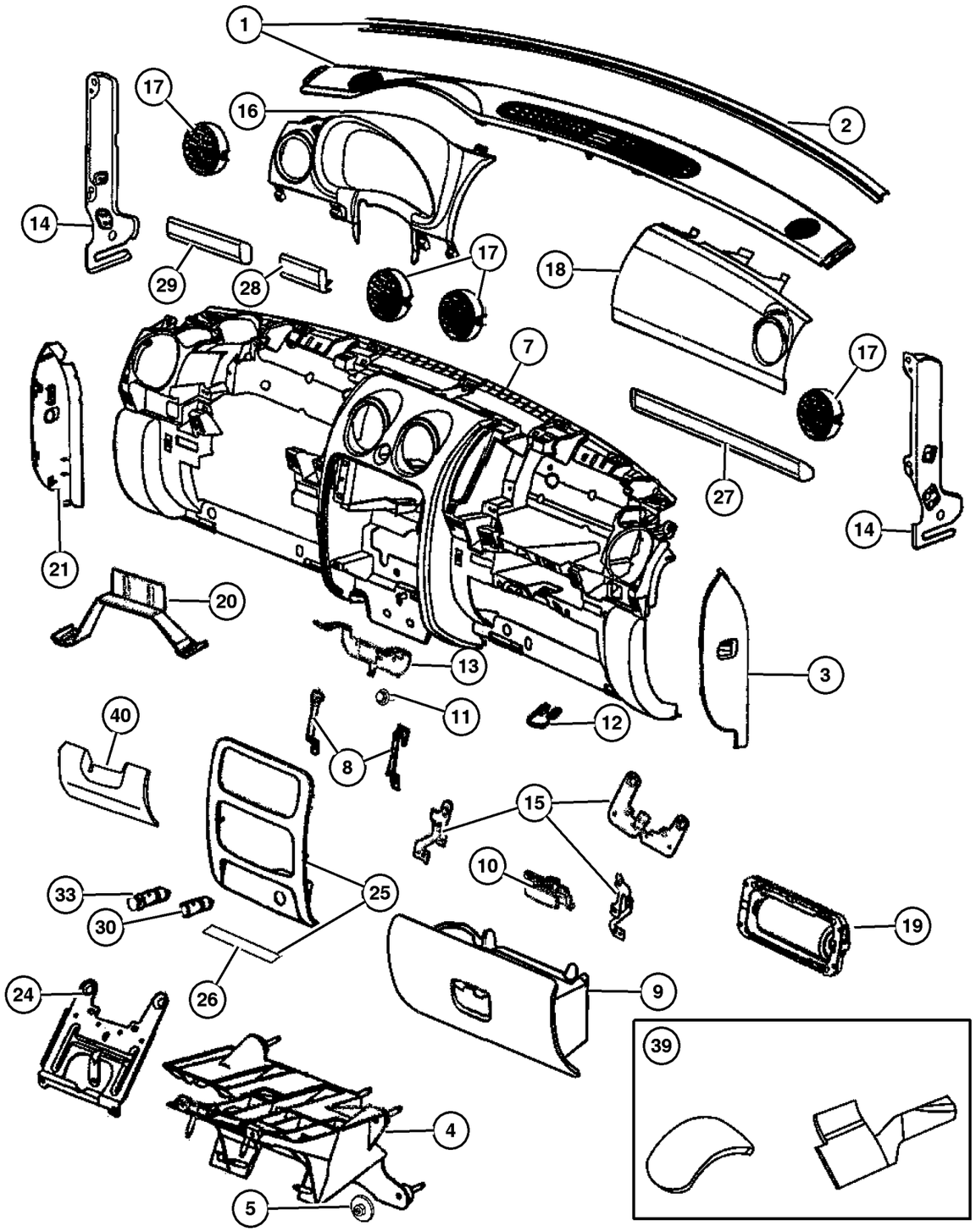

ITEM	PART NUMBER	QTY	LINE	SERIES	BODY	ENGINE	TRANS	TRIM	DESCRIPTION
	55352 787AG-	1	J, T						Left
	55352 788AF-	1	U						Right
	55352 789AG-	1	U						Left
-36	4595 823AB-	1							SMOKERS KIT, Ash Receiver With Lighter
-37	55116 979AB-	1							ASH RECEIVER, Floor Console
-38									GROMMET, Instrument Panel
	5140 877AA-	1	J, T						
		1	U						
39	55037 718AC	1	J, T			EN0			INSULATION, Dash Panel
40									PANEL, Knee Blocker
	5JF63 XDHAC	1							[D5]
		1							[DB]
	5JF63 ZJ8AC	1							[J1]
		1							[J3]
-41									HANDLE, Grab
	5KD07 XDHAA-	1	J, T						[D5]
		1	J, T						[DB]
	5KD07 ZJ8AA-	1	J, T						[J1]
		1	J, T						[J3]
-42									CLIP, Instrument Panel
	5189 225AA-	1	U						For ESP Connector
		1	J, T						For ESP Connector

2006 Liberty (KJ)

SERIES	LINE	BODY	ENGINE	TRANSMISSION
H =HIGHLINE	T =JEEP - 2WD	74 =SPORT UTILITY 4-DR	EKG=3.7L V6 Eng.	DG6=4-Spd. Auto. 42RLE Trans.
M =MEDIUM	J =JEEP - 4WD		ENR=2.8L 4 Cyl Turbo Diesel Eng.	DGV=4-Spd. Auto. VLP Trans.
P =PREMIUM	U =JEEP - 4WD (RHD)		ENJ=2.5L 4 Cyl 16V Turbo Diesel Eng.	DGQ=5-Spd Auto. 5-45RFE Trans.
			ED1=2.4L 4 Cyl DOHC 16v SMPI Eng.	DEH=6-Speed Man. NSG370 Trans.
				DDD=5-Speed HD Man. Trans.
				DDK=5-Speed HD Man. Trans.

AR = Use as required - = Non illustrated part # = New this model year

Instrument Panel Cluster
Figure 08A-210

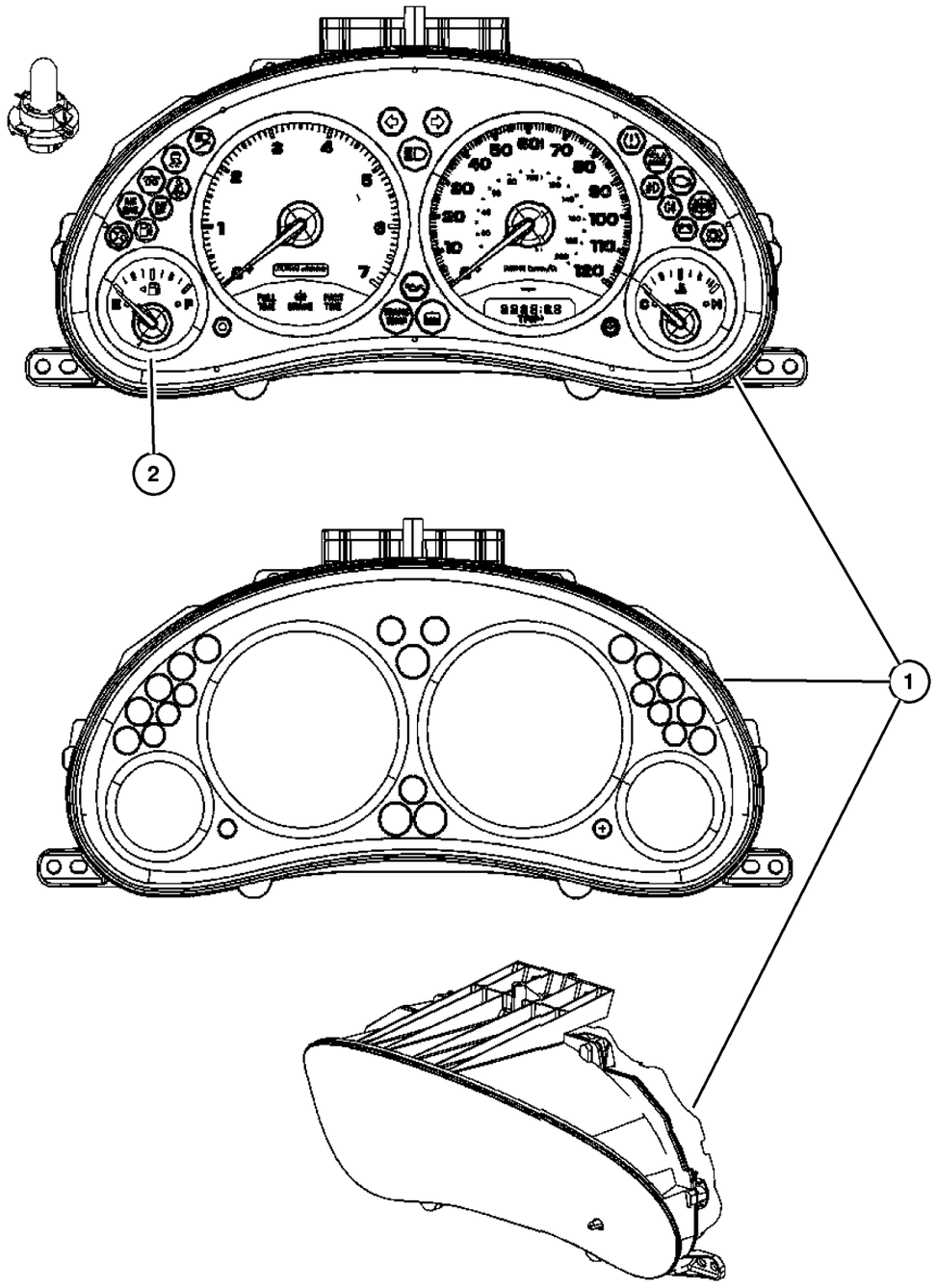

ITEM	PART NUMBER	QTY	LINE	SERIES	BODY	ENGINE	TRANS	TRIM	DESCRIPTION
1									CLUSTER, Instrument Panel
	56044 865AC	1				ED0,			[JAY,JCB]
						EK0			
		1				EK0			[JAY,JCB]
	56044 866AC	1				ED0,			[JAY,JCB,ABU]
						EK0			
		1				EK0			[JAY,JCB,ABU]
	56044 869AC	1				ED0,			[JA2,JCB]
						EK0			
		1				EK0			[JA2,JCB]
	56044 870AC	1				ED0,			[JA2,JCB,ABU]
						EK0			
		1				EK0			[JA2,JCB,ABU]
	56044 871AC	1				ED0,			[JAY,JDJ]
						EK0			
		1				EK0			[JAY,JDJ]
	56044 872AC	1				ED0,			[JA2,JDJ]
						EK0			
		1				EK0			[JA2,JDJ]
	56044 873AC	1				ED0,			[JAY,JDR]
						EK0			
		1				EK0			[JAY,JDR]
	56044 874AC	1				ED0,			[JA2,JDR]
						EK0			
		1				EK0			[JA2,JDR]
	56044 875AC	1				EN0			[JAY,JCB,ABU]
	56044 876AC	1				EN0			[JA2,JCB,ABU]
	56044 877AC	1				EN0			[JAY,JDJ]
	56044 878AC	1				EN0			[JA2,JDJ]
	56044 879AC	1				EN0			[JAY,JDR]
	56044 880AC	1				EN0			[JA2,JDR]
	56044 881AC	1				EN0			[JAY,JCB]
	56044 882AC	1				EN0			[JA2,JCB]
2									MASK AND LENS, Instrument Cluster
	4828 962AB	1				ED0,			[JAY]
						EK0			
		1				EN0			[JAY]
	4832 731AC	1				ED0,			[JA2]
						EK0			
		1				EN0			[JA2]

2006 Liberty (KJ)

SERIES	LINE	BODY	ENGINE	TRANSMISSION
H =HIGHLINE	T =JEEP - 2WD	74 =SPORT UTILITY 4-DR	EKG=3.7L V6 Eng.	DG6=4-Spd. Auto. 42RLE Trans.
M =MEDIUM	J =JEEP - 4WD		ENR=2.8L 4 Cyl Turbo Diesel Eng.	DGV=4-Spd. Auto. VLP Trans.
P =PREMIUM	U =JEEP - 4WD (RHD)		ENJ=2.5L 4 Cyl 16V Turbo Diesel Eng.	DGQ=5-Spd Auto. 5-45RFE Trans.
			ED1=2.4L 4 Cyl DOHC 16v SMPI Eng.	DEH=6-Speed Man. NSG370 Trans.
				DDD=5-Speed HD Man. Trans.
				DDK=5-Speed HD Man. Trans.

Radios
Figure 08A-310

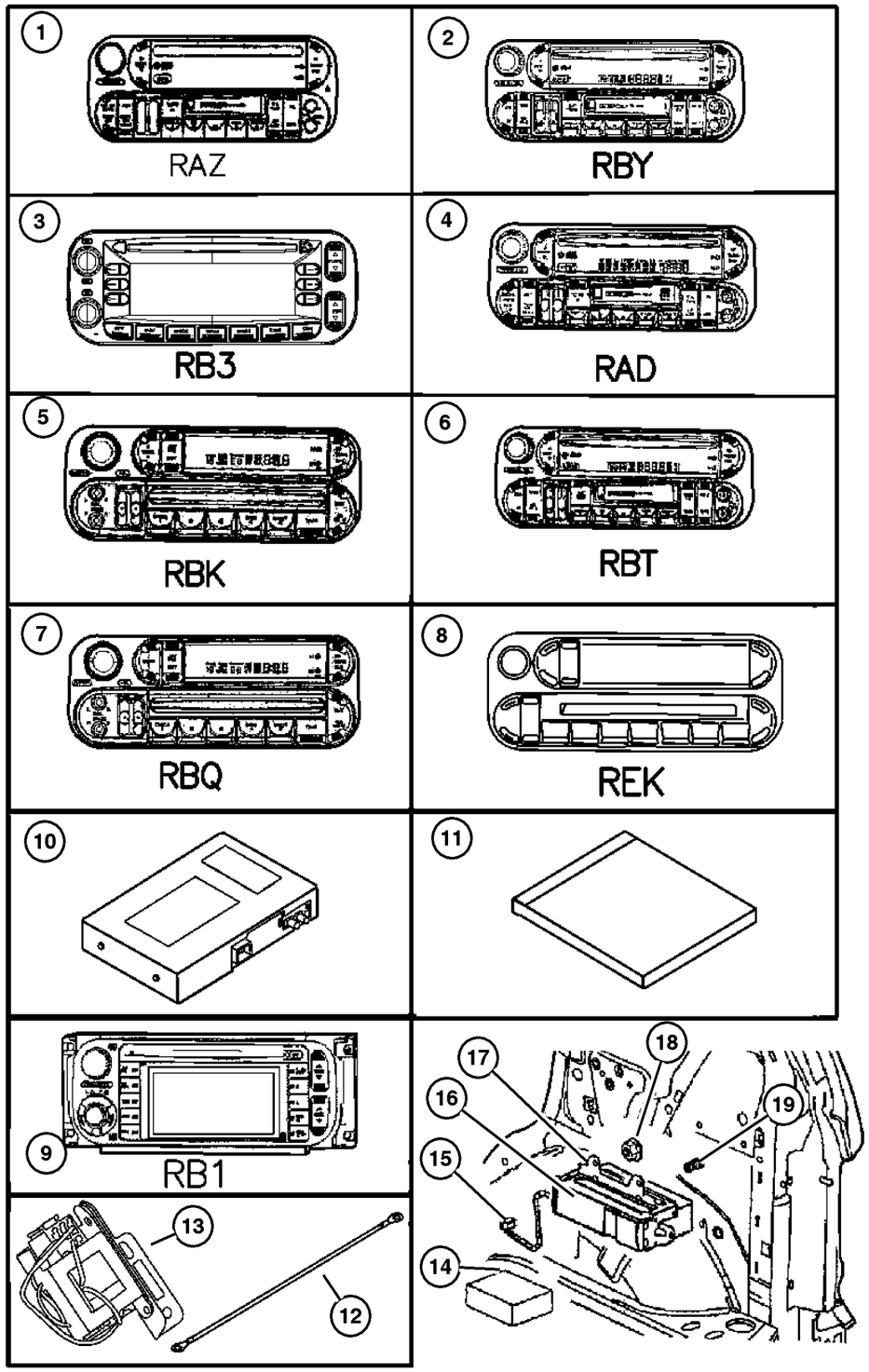

ITEM	PART NUMBER	QTY	LINE	SERIES	BODY	ENGINE	TRANS	TRIM	DESCRIPTION
1	5064 042AB	1							RADIO, AM/FM with CD and Cassette, [RAZ]
2	5091 609AD	1							RADIO, AM/FM/Cassette With CD, [RBY]
3	5064 119AA	1							RADIO, AM/FM CD W/NAV & CD-CTRL, [RB3]
4	5091 601AF	1							RADIO, AM/FM/Cassette With CD, [RAD]
5	5091 506AE	1							RADIO, AM/FM with CD and Equalizer, [RBK]
6	5091 608AD	1							RADIO, AM/FM/Cassette With CD, [RBT]
7	5091 507AE	1							RADIO, AM/FM with CD and Equalizer, [RBQ]
8	5091 610AC	1							RADIO, AM/FM with CD, [REK]
9	56038 629AH	1							RADIO, AM/FM CD W/NAV/DVD & CD-CTRL, [RB1]
10	5064 020AJ	1							RECEIVER, Satellite
11	5064 033AC	1							DVD, Geographic Database
12									STRAP, Ground
	56038 750AB	1							Hood to Fender
	56038 554AB	1				EK0			Engine to body
13									CHOKE, Speaker
	56038 654AA	1	J, T						
	56038 655AA	1	U						
14	4797 433	1							MAGAZINE, CD Changer, [REM]
15									CABLE, CD Changer
	5073 243AB	1			74				
	56050 824AD	1	J, T						[REM]
	56050 825AD	1	U						[REM]
16	56038 616AA	1			74				CHANGER, CD
17	56038 605AA	1							BRACKET, CD Changer
18	6100 047	4							NUT AND WASHER, Hex Nut-Coned Washer, M6 x 1.00, [REM]
19	6503 846	4							STUD, Single Ended, Knurled, Pilot Point, M6x1.00x20.00, Changer mounting

2006 Liberty (KJ)

SERIES	LINE	BODY	ENGINE	TRANSMISSION
H =HIGHLINE	T =JEEP - 2WD	74 =SPORT UTILITY 4-DR	EKG=3.7L V6 Eng.	DG6=4-Spd. Auto. 42RLE Trans.
M =MEDIUM	J =JEEP - 4WD		ENR=2.8L 4 Cyl Turbo Diesel Eng.	DGV=4-Spd. Auto. VLP Trans.
P =PREMIUM	U =JEEP - 4WD (RHD)		ENJ=2.5L 4 Cyl 16V Turbo Diesel Eng.	DGQ=5-Spd Auto. 5-45RFE Trans.
			ED1=2.4L 4 Cyl DOHC 16v SMPI Eng.	DEH=6-Speed Man. NSG370 Trans.
				DDD=5-Speed HD Man. Trans.
				DDK=5-Speed HD Man. Trans.

Speakers
Figure 08A-320

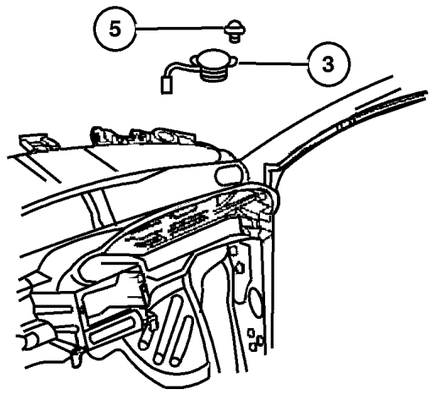

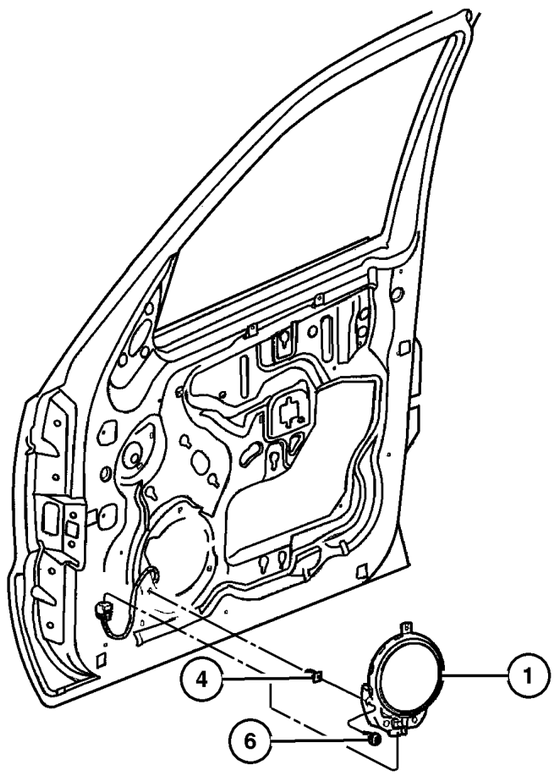

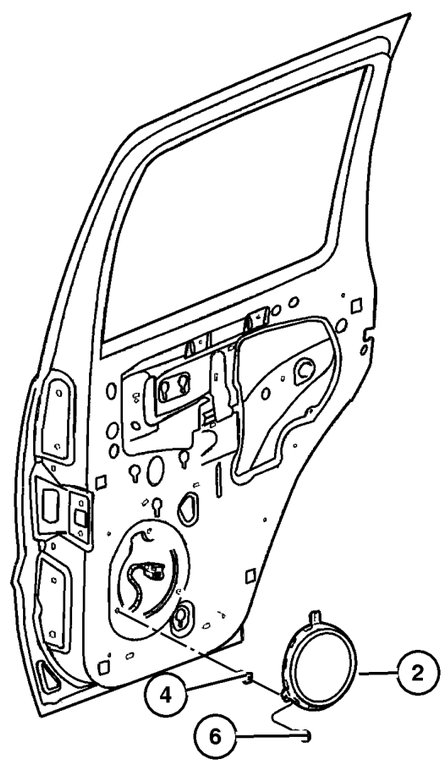

ITEM	PART NUMBER	QTY	LINE	SERIES	BODY	ENGINE	TRANS	TRIM	DESCRIPTION
Notes:									
[RCG] = Speakers, Six									
[RCJ] = Speakers, Six, Premium Infinity									
1									SPEAKER, 6.5"
	5091 020AB	2							[RCG], Front Door
	56038 593AI	2							[RCJ], Front Door
2									SPEAKER, 6.5"
	5091 020AB	2							[RCG], Rear Door
	56038 800AB	2							[RCJ], Rear Door
3									SPEAKER, Tweeter
	56010 666AC	2							[RCG]
	56038 815AB	2							[RCJ]
4	6507 009AA	6							NUT, Plastic Snap-in, Mounting, Door Speaker
5									SCREW, M4.2X1.70X15.00 (Door Speaker Mounting), (NOT SERVICED) (Not Serviced)
6									SCREW, 0.164-18X.750 (I/Panel Speaker Mounting), (NOT SERVICED) (Not Serviced)

2006 Liberty (KJ)

SERIES	LINE	BODY	ENGINE	TRANSMISSION
H =HIGHLINE	T =JEEP - 2WD	74 =SPORT UTILITY 4-DR	EKG=3.7L V6 Eng.	DG6=4-Spd. Auto. 42RLE Trans.
M =MEDIUM	J =JEEP - 4WD		ENR=2.8L 4 Cyl Turbo Diesel Eng.	DGV=4-Spd. Auto. VLP Trans.
P =PREMIUM	U =JEEP - 4WD (RHD)		ENJ=2.5L 4 Cyl 16V Turbo Diesel Eng.	DGQ=5-Spd Auto. 5-45RFE Trans.
			ED1=2.4L 4 Cyl DOHC 16v SMPI Eng.	DEH=6-Speed Man. NSG370 Trans.
				DDD=5-Speed HD Man. Trans.
				DDK=5-Speed HD Man. Trans.

Antenna
Figure 08A-330

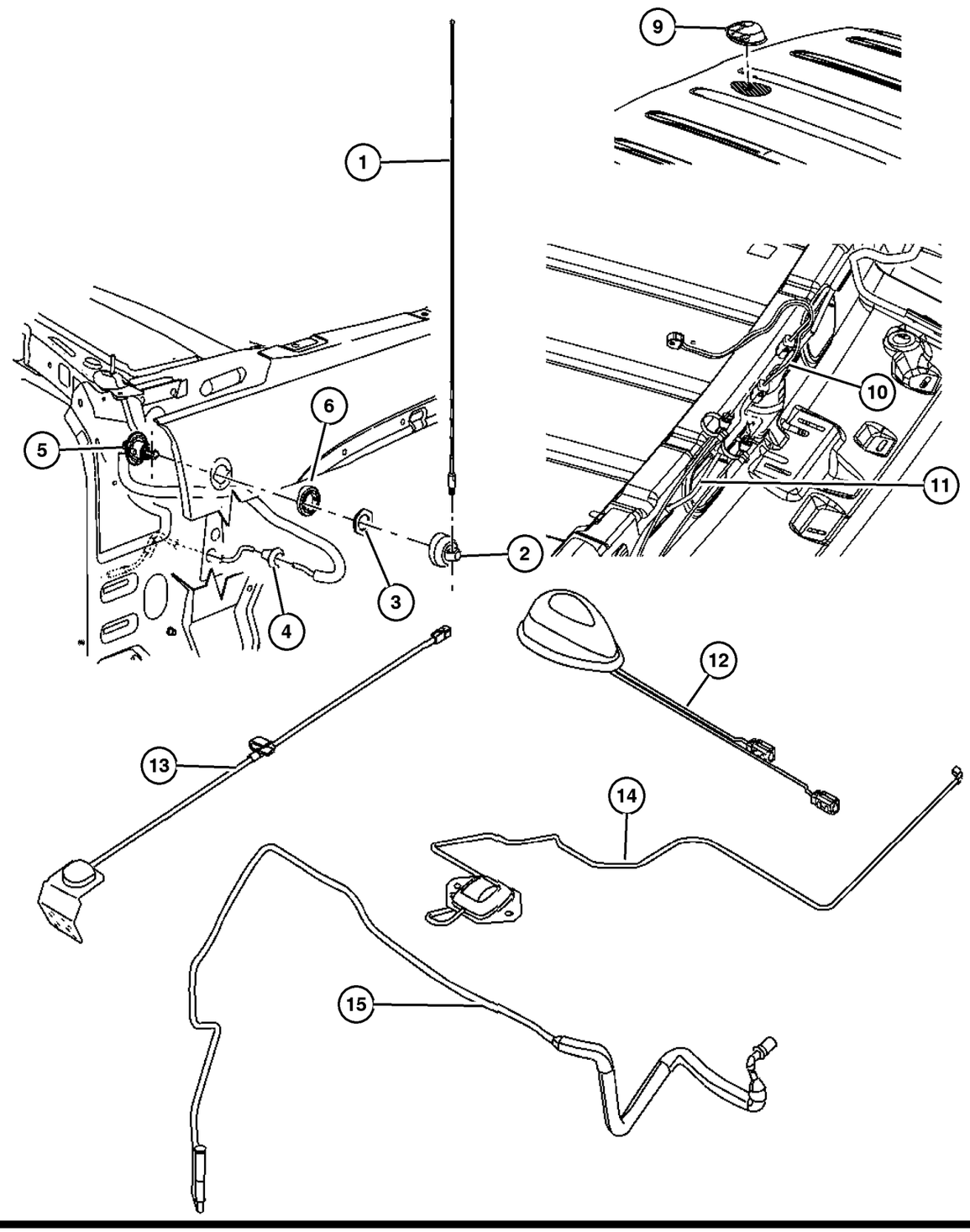

ITEM	PART NUMBER	QTY	LINE	SERIES	BODY	ENGINE	TRANS	TRIM	DESCRIPTION
NOTES:									
Sales Codes:									
[RB1] = AM/FM,CD,GPS Navigation									
[RB3] = AM/FM,CD,GPS,Navigation									
[RDL] = Antenna- Integrated in Rear Window									
[RSA] = Sirius Satellite Radio									
1	56038 545AE	1							MAST, Antenna
2	56038 523AA	1							COVER, Antenna Opening
3	56038 581AA	1							NUT
4									GROMMET, Serviced with Cable Base Assembly with Lead, (NOT SERVICED) (Not Serviced)
5									ANTENNA
	56038 526AF	1							[RDD]
	56038 527AE	1							[RDL]
6	56038 580AB	1							ADAPTER, Antenna
-7	4780 615AB-	2							PLUG, Body, .75 Diameter
-8									SCREW, (NOT SERVICED) (Not Serviced)
9	5066 205AC	1							ANTENNA, Satellite
10	5026 097AB	1							ANTENNA, Keyless Entry
11	56038 804AC	1							CABLE, Antenna
12	5066 205AC	1							ANTENNA, Satellite
13									ANTENNA, Global Positioning
	56040 794AA	1							[RB3]
	56040 796AA	1							[RB1]
14	5094 003AA	1							ANTENNA, Satellite
15									CABLE, Antenna
	56038 559AG	1							Radio to cowl
	56038 575AG	1							Antenna module to cowl
	56038 576AG	1							Radio to cowl RHD

2006 Liberty (KJ)

SERIES	LINE	BODY	ENGINE	TRANSMISSION
H =HIGHLINE	T =JEEP - 2WD	74 =SPORT UTILITY 4-DR	EKG=3.7L V6 Eng.	DG6=4-Spd. Auto. 42RLE Trans.
M =MEDIUM	J =JEEP - 4WD		ENR=2.8L 4 Cyl Turbo Diesel Eng.	DGV=4-Spd. Auto. VLP Trans.
P =PREMIUM	U =JEEP - 4WD (RHD)		ENJ=2.5L 4 Cyl 16V Turbo Diesel Eng.	DGQ=5-Spd Auto. 5-45RFE Trans.
			ED1=2.4L 4 Cyl DOHC 16v SMPI Eng.	DEH=6-Speed Man. NSG370 Trans.
				DDD=5-Speed HD Man. Trans.
				DDK=5-Speed HD Man. Trans.

Console, Overhead
Figure 08A-410

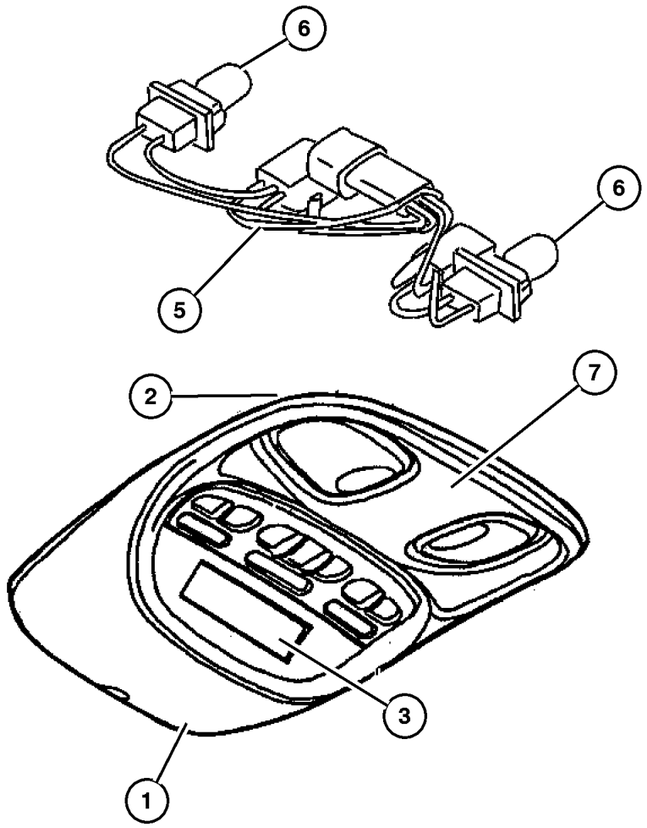

ITEM	PART NUMBER	QTY	LINE	SERIES	BODY	ENGINE	TRANS	TRIM	DESCRIPTION
1									HOUSING, Overhead Console
	1AU40 BD1AA	1	J, T						[GWA]
		1	J, U						[GWA]
	1BZ08 BD1AA	1	J, T						
		1	J, U						
2									RETAINER, Overhead Console
	5072 348AA	1	J, T						
		1	J, U						
3									MODULE, Overhead Console
	56010 520AD	1	J, T						[AHM]
	56010 527AD	1	J, U						
-4	5GV82 BD1AG-	1	J, U						MODULE, Intrusion
5									WIRING, Overhead Console
	4760 644	1	J, T						
	5166 454AA	1	J, T						With bulb and sockets
		1	J, U						With bulb and sockets
6									BULB, 192
	L000 0192	2	J, T						
		2	J, U						
7									LAMP, Reading
	WT01 BD1AA	1	J, T						
		1	J, U						
-8									BULB, 212-2
	L002 1202	2	J, T						
		2	J, U						
-9									SWITCH, Sunroof
	1BN48 BD1AA-	1	J, T						
		1	J, U						
-10	56010 331AB-	1	J, U						RETAINER, Electronic Module
-11									LAMP, Message Center
	4437 661	3	J, T						
		3	J, U						
-12									LENS, Message Center
	5012 882AA-	1	J, T						
		1	J, U						

2006 Liberty (KJ)

SERIES	LINE	BODY	ENGINE	TRANSMISSION
H =HIGHLINE	T =JEEP - 2WD	74 =SPORT UTILITY 4-DR	EKG=3.7L V6 Eng.	DG6=4-Spd. Auto. 42RLE Trans.
M =MEDIUM	J =JEEP - 4WD		ENR=2.8L 4 Cyl Turbo Diesel Eng.	DGV=4-Spd. Auto. VLP Trans.
P =PREMIUM	U =JEEP - 4WD (RHD)		ENJ=2.5L 4 Cyl 16V Turbo Diesel Eng.	DGQ=5-Spd Auto. 5-45RFE Trans.
			ED1=2.4L 4 Cyl DOHC 16v SMPI Eng.	DEH=6-Speed Man. NSG370 Trans.
				DDD=5-Speed HD Man. Trans.
				DDK=5-Speed HD Man. Trans.

Console, Floor
Figure 08A-420

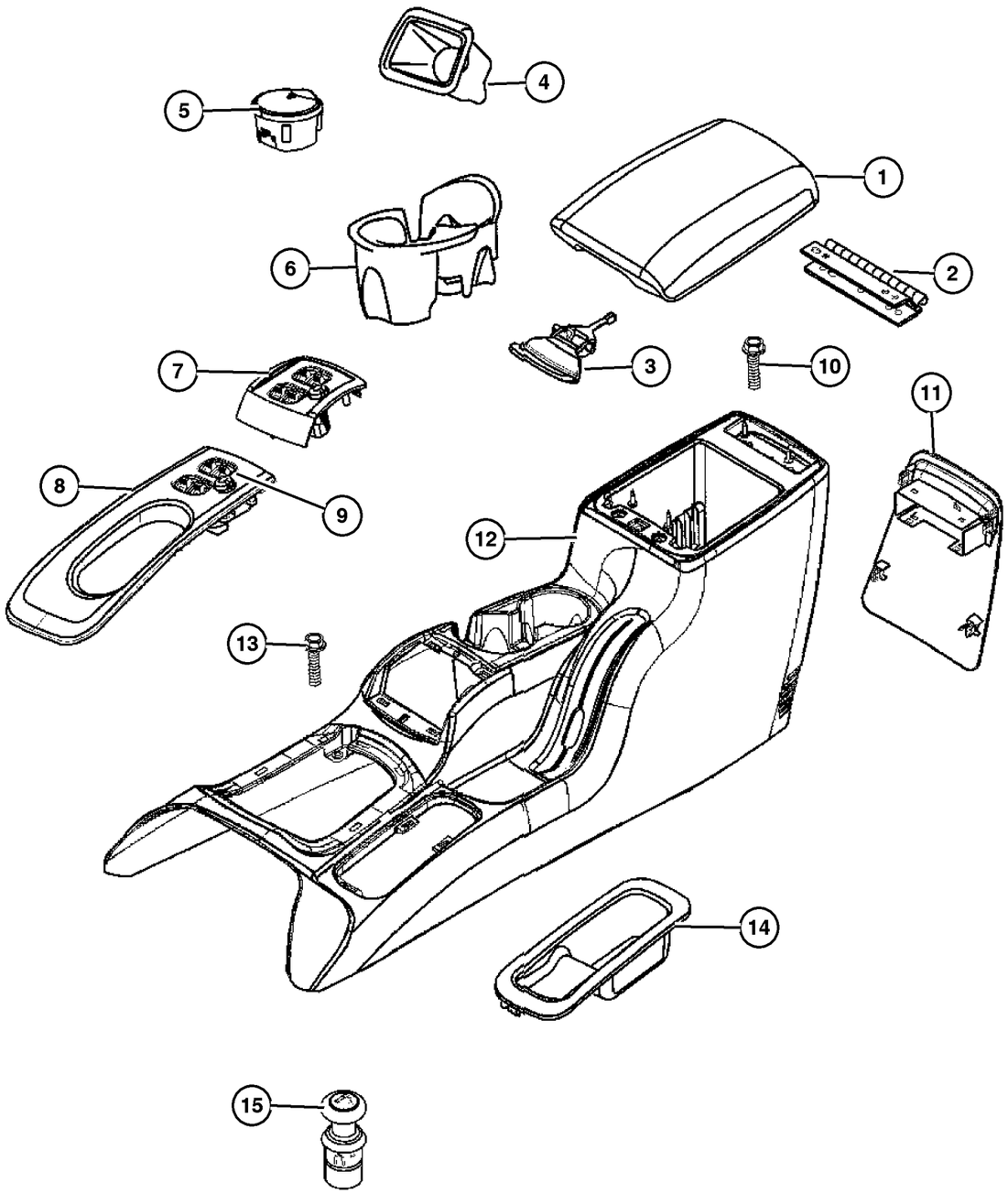

ITEM	PART NUMBER	QTY	LINE	SERIES	BODY	ENGINE	TRANS	TRIM	DESCRIPTION
1									LID, Floor Console Bin
	WD59 1DHAB	1					DBB		[D5]
		1					DBB		[DB]
		1					DG0		[D5]
		1					DG0		[DB]
	WD59 1J8AB	1					DBB		[J1]
		1					DBB		[J3]
2									HINGE, Floor Console Lid
	5072 906AA	1					DBB		
		1					DG0		
3									LATCH, Console Lock
	5072 905AA	1					DBB		
		1					DG0		
4									BIN, Floor Console
	5142 485AA	1					DBB		
		1					DG0		
5	55116 979AB	1							ASH RECEIVER, Floor Console
6									CUPHOLDER, Floor Console
	5142 484AB	1					DG0		
		1					DBB		
7	5KC69 DX9AA	1					DBB		BEZEL, Gear Selector
8									BEZEL, Gear Selector
	5KC57 DX9AA	1		H			DG0		
	5KC58 AAAAA	1		M			DG0		
	5KC59 XZAAA	1		P			DG0		
9	56054 002AA	1					DBB		SWITCH, Power Window, Power Window Master
10									SCREW, Hex Flange Head, M4.2x1.70x16.00, (NOT SERVICED) (Not Serviced)
11									BEZEL, Power Window Switch
	WA64 XDHAB	1							[D5]
		1							[DB]
	WA64 ZJ8AB	1							[J1]
		1							[J3]
12									CONSOLE, Base
	1AZ41 1DHAB	1					DBB		[D5]
		1					DBB		[DB]
	1AZ41 1J8AB	1					DBB		[J1]
		1					DBB		[J3]
	1BA08 1DHAB	1					DG0		[D5]
		1					DG0		[DB]

2006 Liberty (KJ)

SERIES	LINE	BODY	ENGINE	TRANSMISSION
H =HIGHLINE	T =JEEP - 2WD	74 =SPORT UTILITY 4-DR	EKG=3.7L V6 Eng.	DG6=4-Spd. Auto. 42RLE Trans.
M =MEDIUM	J =JEEP - 4WD		ENR=2.8L 4 Cyl Turbo Diesel Eng.	DGV=4-Spd. Auto. VLP Trans.
P =PREMIUM	U =JEEP - 4WD (RHD)		ENJ=2.5L 4 Cyl 16V Turbo Diesel Eng.	DGQ=5-Spd Auto. 5-45RFE Trans.
			ED1=2.4L 4 Cyl DOHC 16v SMPI Eng.	DEH=6-Speed Man. NSG370 Trans.
				DDD=5-Speed HD Man. Trans.
				DDK=5-Speed HD Man. Trans.

AR = Use as required - = Non illustrated part # = New this model year

Console, Floor
Figure 08A-420

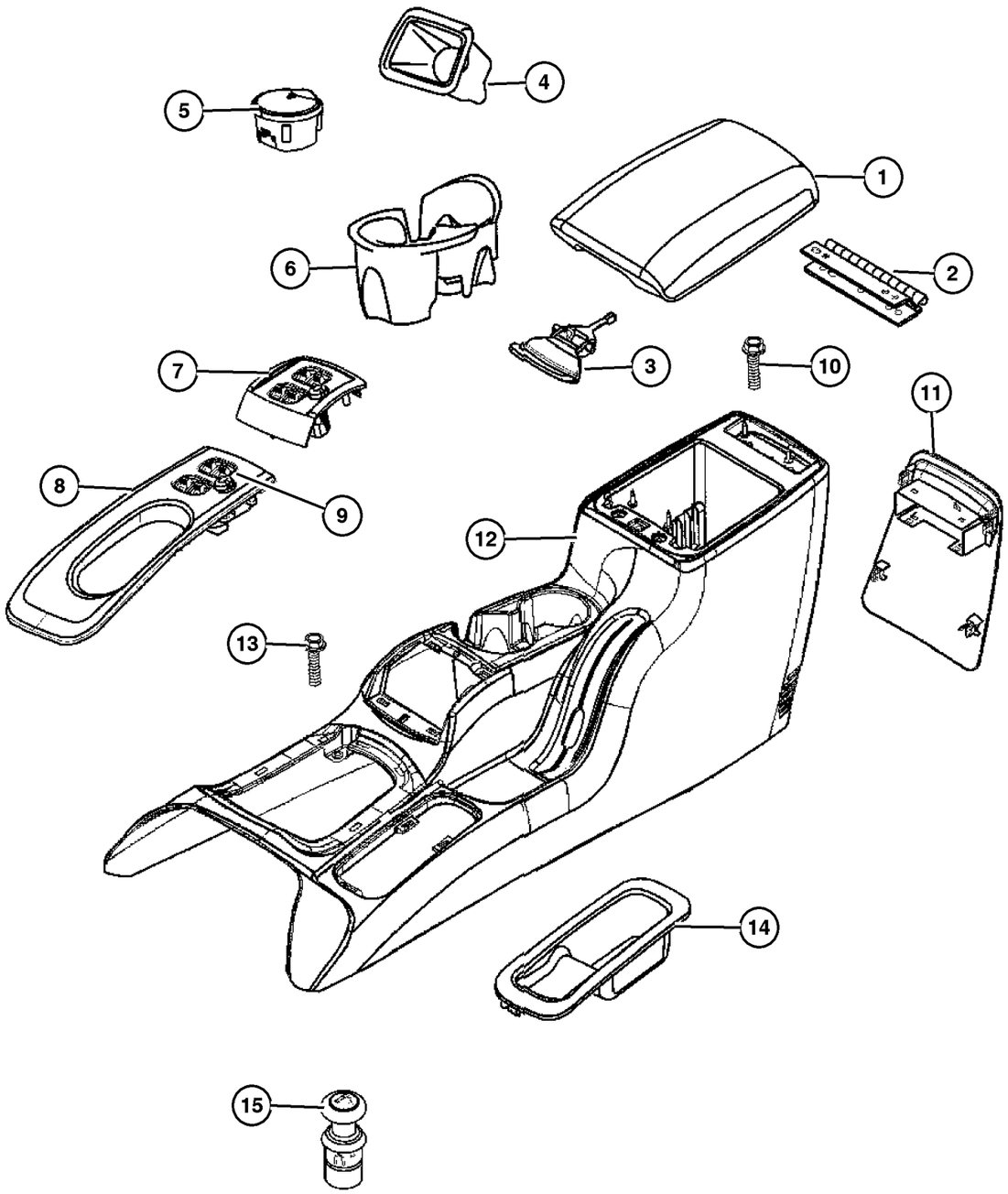

ITEM	PART NUMBER	QTY	LINE	SERIES	BODY	ENGINE	TRANS	TRIM	DESCRIPTION
	1BA08 1J8AB	1					DG0		[J1]
		1					DG0		[J3]
13	6101 945	4							SCREW, Console To Floor
14	5GG16 DX9AC	1	T						COVER, Floor Console
15	4685 536	1							KNOB AND ELEMENT, Cigar Lighter
-16									CLIP, Push, .164-7.5
	6034 833	1					DBB		
		1					DG0		
-17									BRACKET, Floor Console
	5072 907AB-	1					DBB		
		1					DG0		

2006 Liberty (KJ)

SERIES	LINE	BODY	ENGINE	TRANSMISSION
H =HIGHLINE	T =JEEP - 2WD	74 =SPORT UTILITY 4-DR	EKG=3.7L V6 Eng.	DG6=4-Spd. Auto. 42RLE Trans.
M =MEDIUM	J =JEEP - 4WD		ENR=2.8L 4 Cyl Turbo Diesel Eng.	DGV=4-Spd. Auto. VLP Trans.
P =PREMIUM	U =JEEP - 4WD (RHD)		ENJ=2.5L 4 Cyl 16V Turbo Diesel Eng.	DGQ=5-Spd Auto. 5-45RFE Trans.
			ED1=2.4L 4 Cyl DOHC 16v SMPI Eng.	DEH=6-Speed Man. NSG370 Trans.
				DDD=5-Speed HD Man. Trans.
				DDK=5-Speed HD Man. Trans.

Group – 009
Engine Mounting

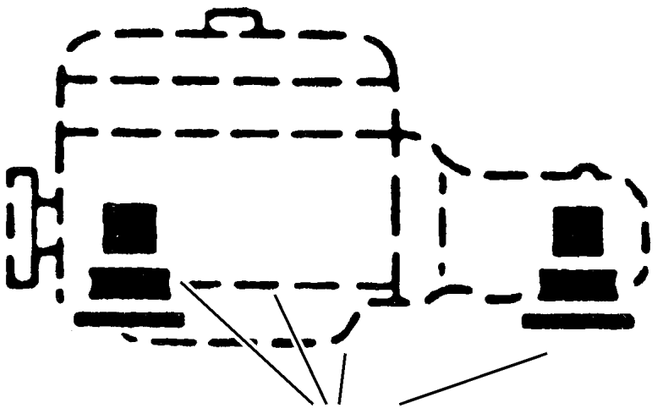

009–100

009–100 Engine Mounting			
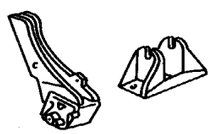			

GROUP 9 - Engine Mounting

Illustration Title — Group-Fig. No.

Engine Mounting

Mounts, Front [ENR] . . . . . Fig. 009-110
Mounts, Front [EKG] . . . . . Fig. 009-120
Front Mounts to Cradle [EKG & ENR] . . . . . Fig. 009-130
Mount, Transmission [DEH] . . . . . Fig. 009-140
Mount, Transmission [DG6, DGQ, & DGV] . . . . . Fig. 009-150
Crossmember, Transmission Support [DEH, DG6, DGQ, & DGV] . . . . . Fig. 009-160

Mounts, Front [ENR]
Figure 009-110

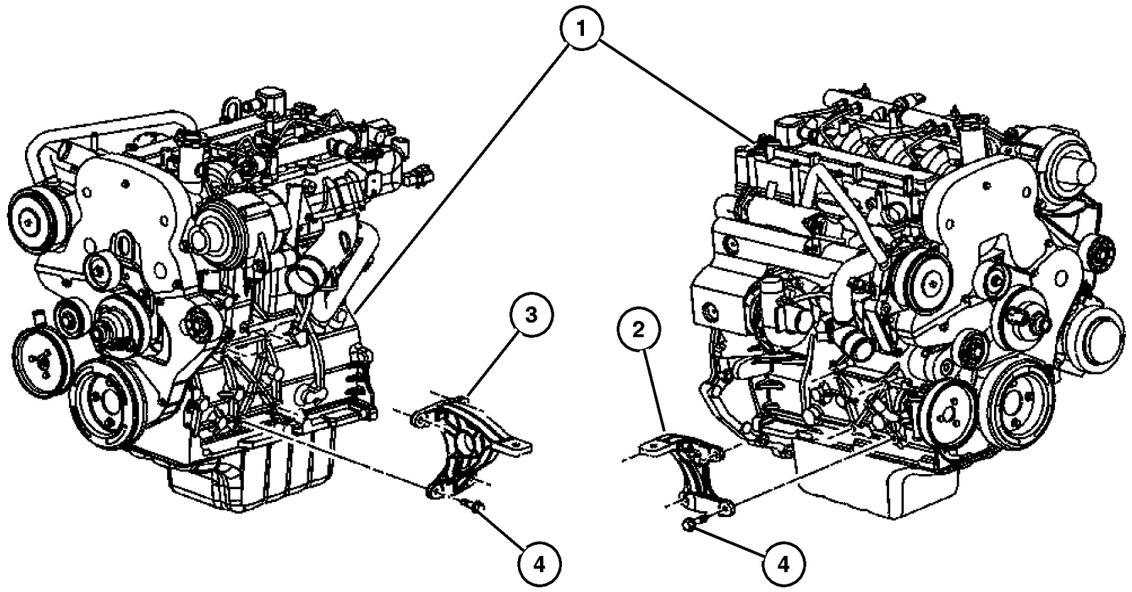

ITEM	PART NUMBER	QTY	LINE	SERIES	BODY	ENGINE	TRANS	TRIM	DESCRIPTION
NOTE:									
Sales Codes:									
[EK0]=All 3.7L V-6 Engines									
[EN0]=All 4/5 Cylinder Turbo Diesel Engines									
1									ENGINE, Complete, See Engine Group, (NOT SERVICED) (Not Serviced)
2	52129 014AC	1				EN0			INSULATOR, Engine Mount, Right
3	52129 015AC	1				EN0			INSULATOR, Engine Mount, Left
4	6503 699	8				EK0, EN0			SCREW AND WASHER, Hex Head, M10x1.5x28

2006 Liberty (KJ)

SERIES	LINE	BODY	ENGINE	TRANSMISSION
H =HIGHLINE	T =JEEP - 2WD	74 =SPORT UTILITY 4-DR	EKG=3.7L V6 Eng.	DG6=4-Spd. Auto. 42RLE Trans.
M =MEDIUM	J =JEEP - 4WD		ENR=2.8L 4 Cyl Turbo Diesel Eng.	DGV=4-Spd. Auto. VLP Trans.
P =PREMIUM	U =JEEP - 4WD (RHD)		ENJ=2.5L 4 Cyl 16V Turbo Diesel Eng.	DGQ=5-Spd Auto. 5-45RFE Trans.
			ED1=2.4L 4 Cyl DOHC 16v SMPI Eng.	DEH=6-Speed Man. NSG370 Trans.
				DDD=5-Speed HD Man. Trans.
				DDK=5-Speed HD Man. Trans.

Mounts, Front [EKG]
Figure 009-120

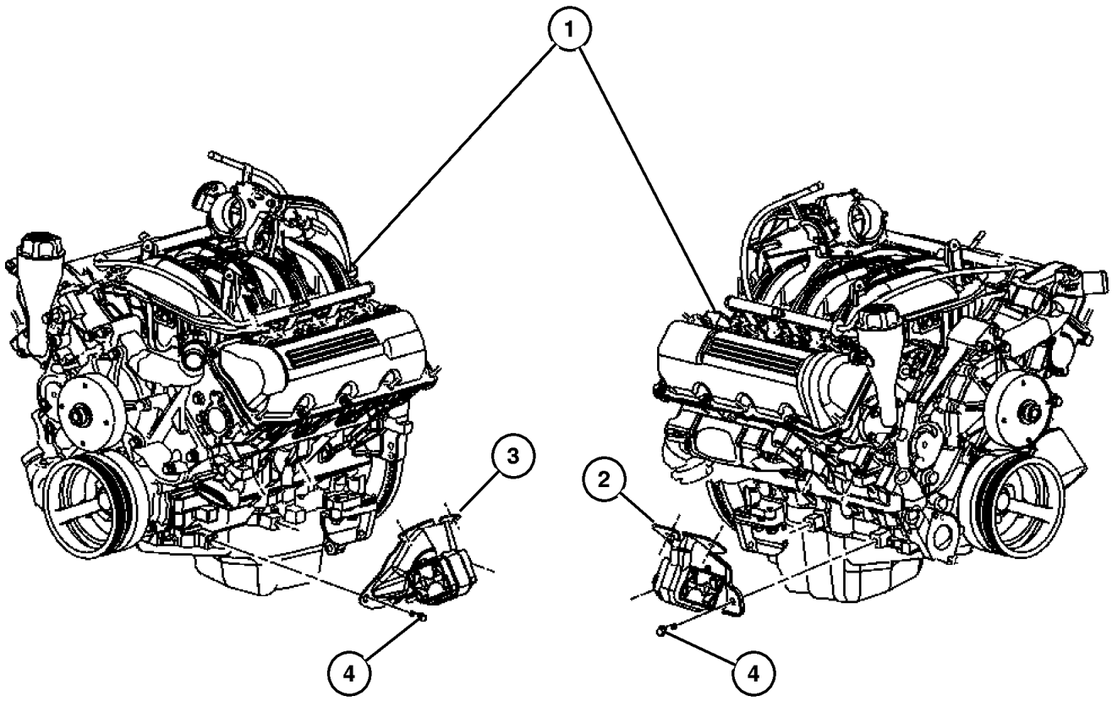

ITEM	PART NUMBER	QTY	LINE	SERIES	BODY	ENGINE	TRANS	TRIM	DESCRIPTION
NOTE:									
Sales Codes:									
[EK0]=All 3.7L V-6 Engines									
[EN0]=All 4/5 Cylinder Turbo Diesel Engines									
1									ENGINE, Complete, See Engine Group, (NOT SERVICED) (Not Serviced)
2	52129 268AD	1				EK0			INSULATOR, Engine Mount, Right
3	52129 269AD	1				EK0			INSULATOR, Engine Mount, Left
4	6503 699	8				EK0, EN0			SCREW AND WASHER, Hex Head, M10x1.5x28

2006 Liberty (KJ)

SERIES	LINE	BODY	ENGINE	TRANSMISSION
H =HIGHLINE	T =JEEP - 2WD	74 =SPORT UTILITY 4-DR	EKG=3.7L V6 Eng.	DG6=4-Spd. Auto. 42RLE Trans.
M =MEDIUM	J =JEEP - 4WD		ENR=2.8L 4 Cyl Turbo Diesel Eng.	DGV=4-Spd. Auto. VLP Trans.
P =PREMIUM	U =JEEP - 4WD (RHD)		ENJ=2.5L 4 Cyl 16V Turbo Diesel Eng.	DGQ=5-Spd Auto. 5-45RFE Trans.
			ED1=2.4L 4 Cyl DOHC 16v SMPI Eng.	DEH=6-Speed Man. NSG370 Trans.
				DDD=5-Speed HD Man. Trans.
				DDK=5-Speed HD Man. Trans.

Front Mounts to Cradle [EKG & ENR]
Figure 009-130

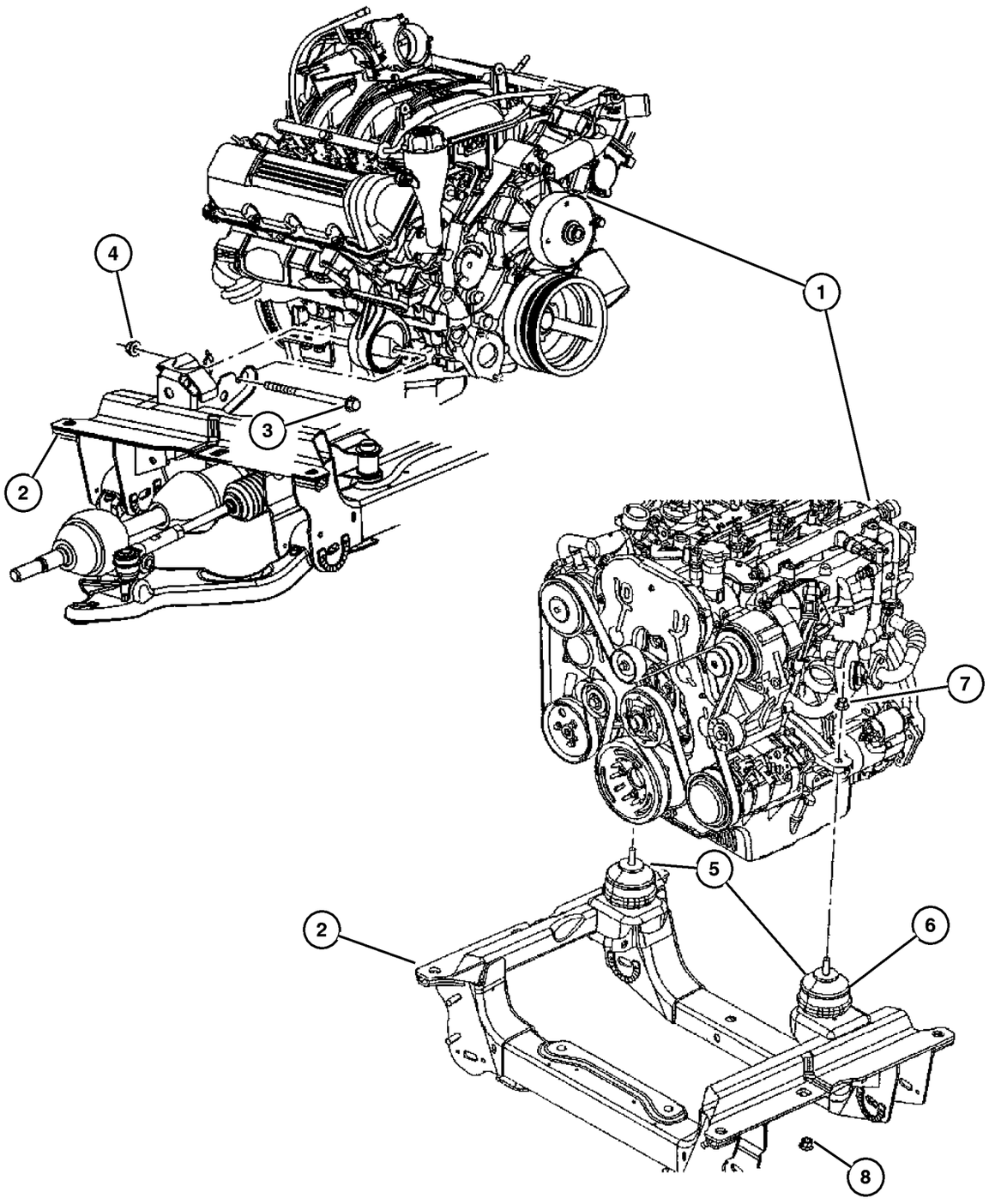

ITEM	PART NUMBER	QTY	LINE	SERIES	BODY	ENGINE	TRANS	TRIM	DESCRIPTION
NOTE:									
Sales Codes:									
[ED0]=All 2.2L, 2.5L, 2.4L 4 Cylinder Gas Engines									
[EK0]=All 3.7L V-6 Engines									
[EN0]=All 4/5 Cylinder Turbo Diesel Engines									
1									ENGINE, Complete, See Engine Group, (NOT SERVICED) (Not Serviced)
2									CRADLE, front suspension, See Group 002, (NOT SERVICED) (Not Serviced)
3	6507 388AA	2				EK0			BOLT, Hex Head, Engine Mount to Clevis Bracket
4	6502 697	2				ED0, EK0			NUT, Hex Flange Lock, M12x1.75, Insulator Assembly to Clevis
5	52129 374AB	1	J, U			EN0			INSULATOR, Engine Mount Hydromount Assembly, with Heat Shield, for Domestic Market with Automatic Transmission, Right
	52129 011AC	1	J, U			EN0			Hydromount Assembly, except Domestic Market with Automatic Transmission, Right or Left
6	52129 011AC	1	J, U			EN0			INSULATOR, Engine Mount, Hydromount Assembly, for Domestic Market with Automatic Transmission, Left
7	6502 697	1				EN0			NUT, Hex Flange Lock, M12x1.75, Hydromount to Hydro Bracket, Right or Left
8	6502 835	2	J, U			EN0			NUT, Hex Flange, M12x1.75, Hydromount to Cradle

2006 Liberty (KJ)

SERIES	LINE	BODY	ENGINE	TRANSMISSION
H =HIGHLINE	T =JEEP - 2WD	74 =SPORT UTILITY 4-DR	EKG=3.7L V6 Eng.	DG6=4-Spd. Auto. 42RLE Trans.
M =MEDIUM	J =JEEP - 4WD		ENR=2.8L 4 Cyl Turbo Diesel Eng.	DGV=4-Spd. Auto. VLP Trans.
P =PREMIUM	U =JEEP - 4WD (RHD)		ENJ=2.5L 4 Cyl 16V Turbo Diesel Eng.	DGQ=5-Spd Auto. 5-45RFE Trans.
			ED1=2.4L 4 Cyl DOHC 16v SMPI Eng.	DEH=6-Speed Man. NSG370 Trans.
				DDD=5-Speed HD Man. Trans.
				DDK=5-Speed HD Man. Trans.

Mount, Transmission [DEH]
Figure 009-140

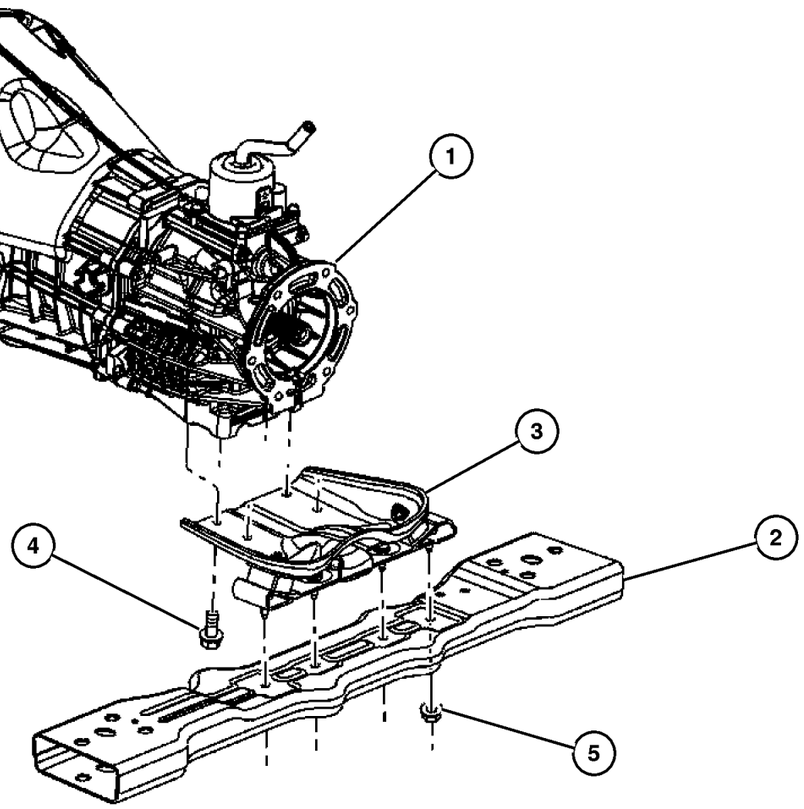

ITEM	PART NUMBER	QTY	LINE	SERIES	BODY	ENGINE	TRANS	TRIM	DESCRIPTION
NOTE:									
Sales Codes:									
[DBB]=All Manual Transmissions									
[EK0]=All 3.7L V-6 Engines									
[EN0]=All 4/5 Cylinder Turbo Diesel Engines									
1									TRANSMISSION, 6 speed, See Group [NSG370], (NOT SERVICED) (Not Serviced)
2									CROSSMEMBER, Transmission
	52129 090AC	1				EK0			
	52129 089AE	1				EN0			
3									BRACKET AND INSULATOR, Transmission Support
	52129 033AB	1				EK0	DBB		
	52129 158AD	1				EN0	DBB		
4									SCREW AND WASHER, Hex Head, M10x1.5x28
	6503 699	4	J, U			EK0			
		4	T			EK0	DBB		
		4	J, U			EN0			
5									NUT
	6104 716AA	4				EK0	DBB		
		4				EN0			

2006 Liberty (KJ)

SERIES	LINE	BODY	ENGINE	TRANSMISSION
H =HIGHLINE	T =JEEP - 2WD	74 =SPORT UTILITY 4-DR	EKG=3.7L V6 Eng.	DG6=4-Spd. Auto. 42RLE Trans.
M =MEDIUM	J =JEEP - 4WD		ENR=2.8L 4 Cyl Turbo Diesel Eng.	DGV=4-Spd. Auto. VLP Trans.
P =PREMIUM	U =JEEP - 4WD (RHD)		ENJ=2.5L 4 Cyl 16V Turbo Diesel Eng.	DGQ=5-Spd Auto. 5-45RFE Trans.
			ED1=2.4L 4 Cyl DOHC 16v SMPI Eng.	DEH=6-Speed Man. NSG370 Trans.
				DDD=5-Speed HD Man. Trans.
				DDK=5-Speed HD Man. Trans.

Mount, Transmission [DG6, DGQ, & DGV]
Figure 009-150

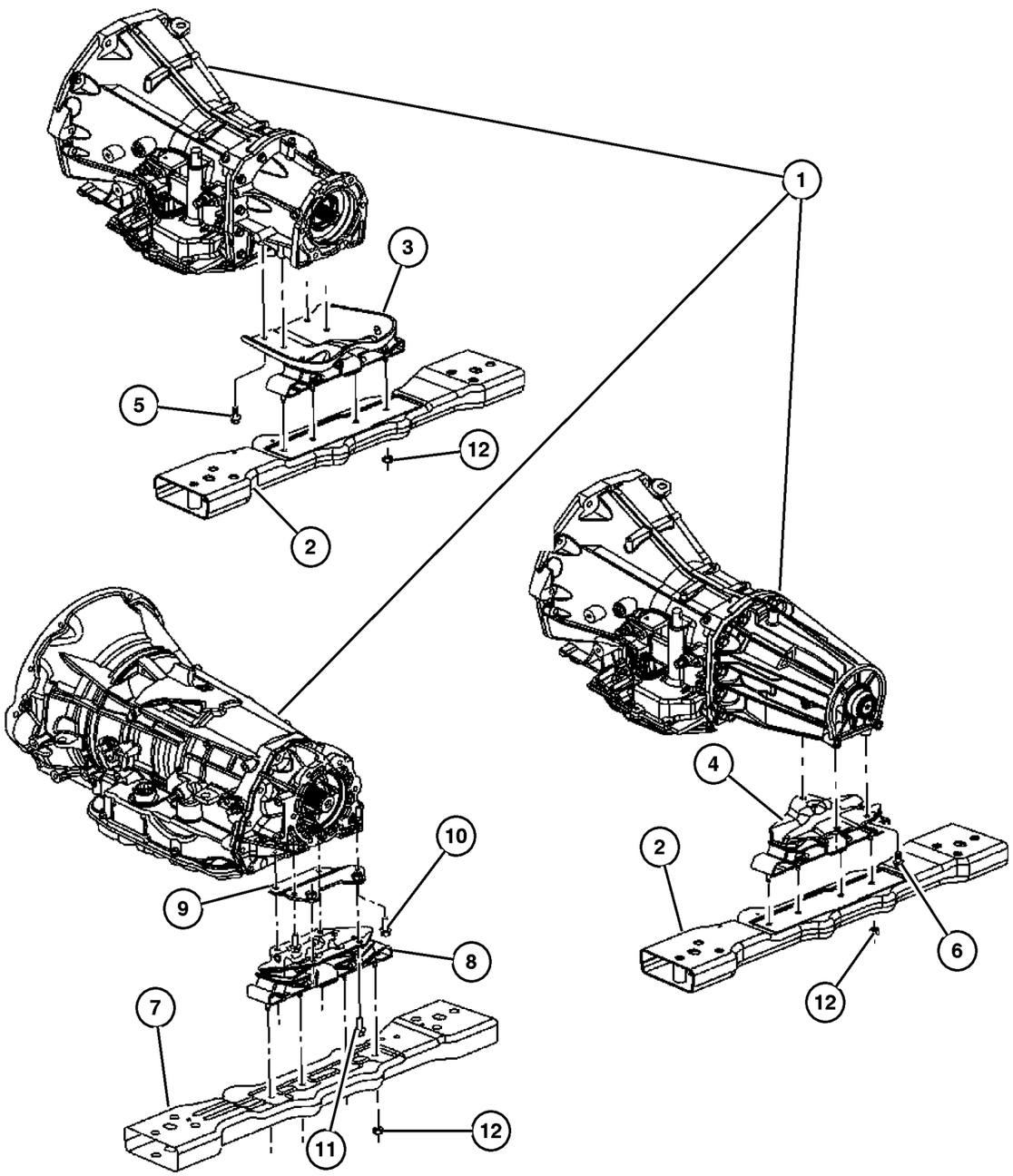

ITEM	PART NUMBER	QTY	LINE	SERIES	BODY	ENGINE	TRANS	TRIM	DESCRIPTION
NOTE:									
Sales Codes:									
[DBB]=All Manual Transmissions									
[DG0]=All Automatic Transmissions									
[DGQ]=5 speed Automatic [5-45RFE] Transmission									
[EK0]=All 3.7L V-6 Engines									
[EN0]=All 4/5 Cylinder Turbo Diesel Engines									
1									TRANSMISSION, Automatic, See Transmission Group, (NOT SERVICED) (Not Serviced)
2	52129 090AC	1				EK0			CROSSMEMBER, Transmission
3	52125 136AC	1	J, U			EK0	DG0		BRACKET AND INSULATOR, Transmission Support
4	52129 040AB	1	T			EK0	DG0		BRACKET AND INSULATOR, Transmission Support
5	6503 699	4	J, U			EK0			SCREW AND WASHER, Hex Head, M10x1.5x28
6	6503 699	4	T			EK0	DBB, DG0		SCREW AND WASHER, Hex Head, M10x1.5x28
7	52129 089AE	1				EN0			CROSSMEMBER, Transmission
8	52129 170AE	1				EN0	DGQ		BRACKET AND INSULATOR, Transmission Support
9	52129 307AB	1				EN0	DGQ		PLATE, Transmission Mount
10	6503 699	2	J, U			EN0			SCREW AND WASHER, Hex Head, M10x1.5x28, Support Plate to Transmission
11	6503 699	4	J, U			EN0			SCREW AND WASHER, Hex Head, M10x1.5x28, Transmission Mount to Support Plate
12									NUT
	6104 716AA	4				EK0	DBB, DG0		
		4				EN0			

2006 Liberty (KJ)

SERIES	LINE	BODY	ENGINE	TRANSMISSION
H =HIGHLINE	T =JEEP - 2WD	74 =SPORT UTILITY 4-DR	EKG=3.7L V6 Eng.	DG6=4-Spd. Auto. 42RLE Trans.
M =MEDIUM	J =JEEP - 4WD		ENR=2.8L 4 Cyl Turbo Diesel Eng.	DGV=4-Spd. Auto. VLP Trans.
P =PREMIUM	U =JEEP - 4WD (RHD)		ENJ=2.5L 4 Cyl 16V Turbo Diesel Eng.	DGQ=5-Spd Auto. 5-45RFE Trans.
			ED1=2.4L 4 Cyl DOHC 16v SMPI Eng.	DEH=6-Speed Man. NSG370 Trans.
				DDD=5-Speed HD Man. Trans.
				DDK=5-Speed HD Man. Trans.

Crossmember, Transmission Support [DEH, DG6, DGQ, & DGV]
Figure 009-160

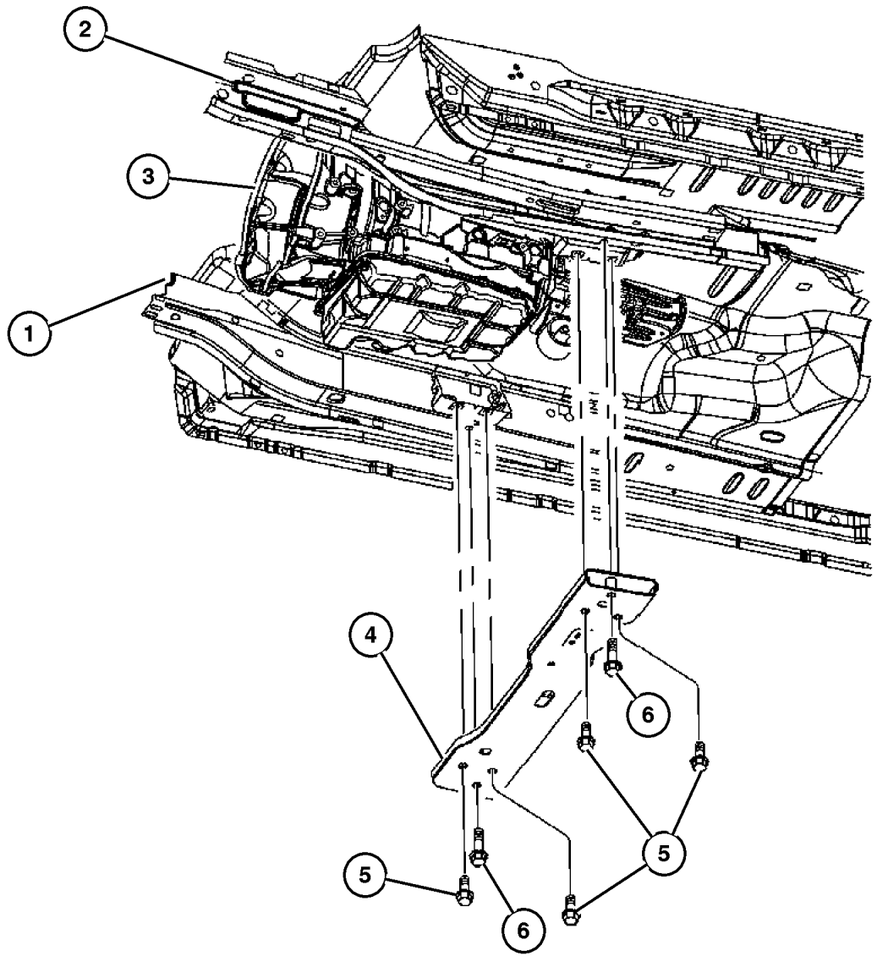

ITEM	PART NUMBER	QTY	LINE	SERIES	BODY	ENGINE	TRANS	TRIM	DESCRIPTION
NOTE:									
Sales Codes:									
[EK0]=All 3.7L V-6 Engines									
[EN0]=All 4/5 Cylinder Turbo Diesel Engines									
1									RAIL, Front Right, See Group [SKJ], (NOT SERVICED) (Not Serviced)
2									RAIL, Front Left, See Group [SKJ], (NOT SERVICED) (Not Serviced)
3									TRANSMISSION, See Transmission Group, (NOT SERVICED) (Not Serviced)
4									CROSSMEMBER, Transmission
	52129 090AC	1				EK0			
	52129 089AE	1				EN0			
5	6508 299AA	4							SCREW, Inner Rail to Crossmember
6	6508 298AA	2							SCREW, Crossmember to Sill Outboard

2006 Liberty (KJ)

SERIES	LINE	BODY	ENGINE	TRANSMISSION
H =HIGHLINE	T =JEEP - 2WD	74 =SPORT UTILITY 4-DR	EKG=3.7L V6 Eng.	DG6=4-Spd. Auto. 42RLE Trans.
M =MEDIUM	J =JEEP - 4WD		ENR=2.8L 4 Cyl Turbo Diesel Eng.	DGV=4-Spd. Auto. VLP Trans.
P =PREMIUM	U =JEEP - 4WD (RHD)		ENJ=2.5L 4 Cyl 16V Turbo Diesel Eng.	DGQ=5-Spd Auto. 5-45RFE Trans.
			ED1=2.4L 4 Cyl DOHC 16v SMPI Eng.	DEH=6-Speed Man. NSG370 Trans.
				DDD=5-Speed HD Man. Trans.
				DDK=5-Speed HD Man. Trans.

Group – 3.7L

Engine 3.7L Six Cylinder

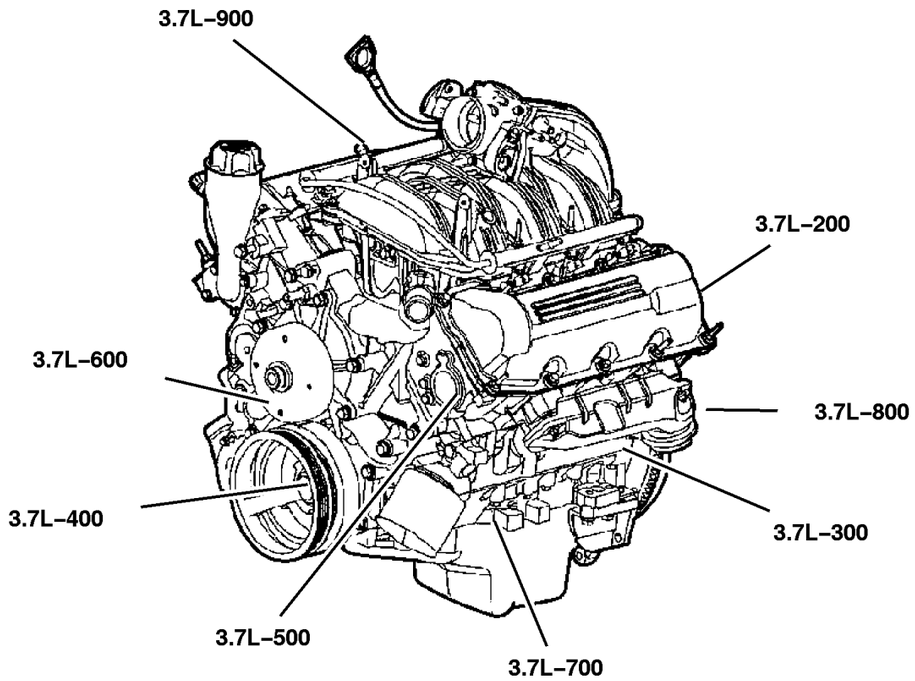

3.7L–200 Cylinder Head 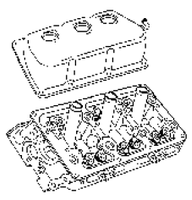	**3.7L–300** Cylinder Block 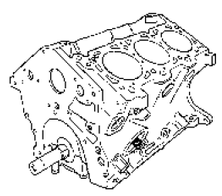	**3.7L–400** Crankshaft, Piston and Torque Converter 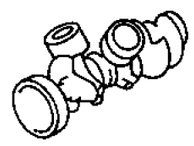	**3.7L–500** Camshafts & Valves 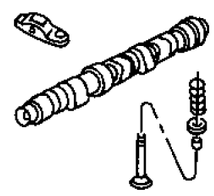
3.7L–600 Timing Belt and Cover 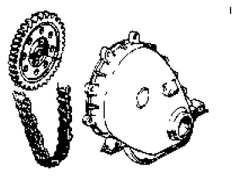	**3.7L–700** Engine Oiling 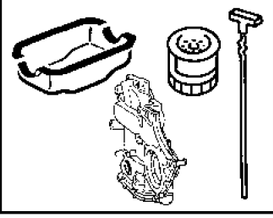	**3.7L–800** Manifolds 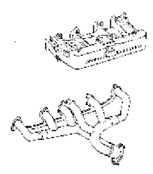	**3.7L–900** Crankcase Ventilation 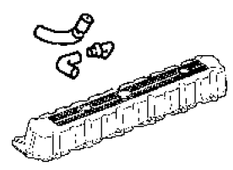

GROUP 3.7L - Engine 3.7L Six Cylinder

Illustration Title — Group-Fig. No.

Cylinder Head
Engine Assembly 3.7L [EKG] . . . . . Fig. 3.7L-205
Cylinder Head 3.7L [EKG] . . . . . Fig. 3.7L-210

Cylinder Block
Engine Block, 3.7L [EKG] . . . . . Fig. 3.7L-305

Crankshaft, Piston and Torque Converter
Crankshaft, Pistons and Flywheel, 3.7L [EKG] . . . . . Fig. 3.7L-405

Camshafts & Valves
Camshaft And Valves, 3.7L [EKG] . . . . . Fig. 3.7L-505

Timing Belt and Cover
Timing Cover, 3.7L [EKG] . . . . . Fig. 3.7L-605
Timing Chain and Guides, 3.7L [EKG] . . . . . Fig. 3.7L-610

Engine Oiling
Engine Oiling, 3.7L [EKG] . . . . . Fig. 3.7L-705

Manifolds
Manifolds, Intake and Exhaust, 3.7L [EKG] . . . . . Fig. 3.7L-805

Crankcase Ventilation
Crankcase Ventilation 3.7L [EKG] . . . . . Fig. 3.7L-905

Engine Assembly 3.7L [EKG]
Figure 3.7L-205

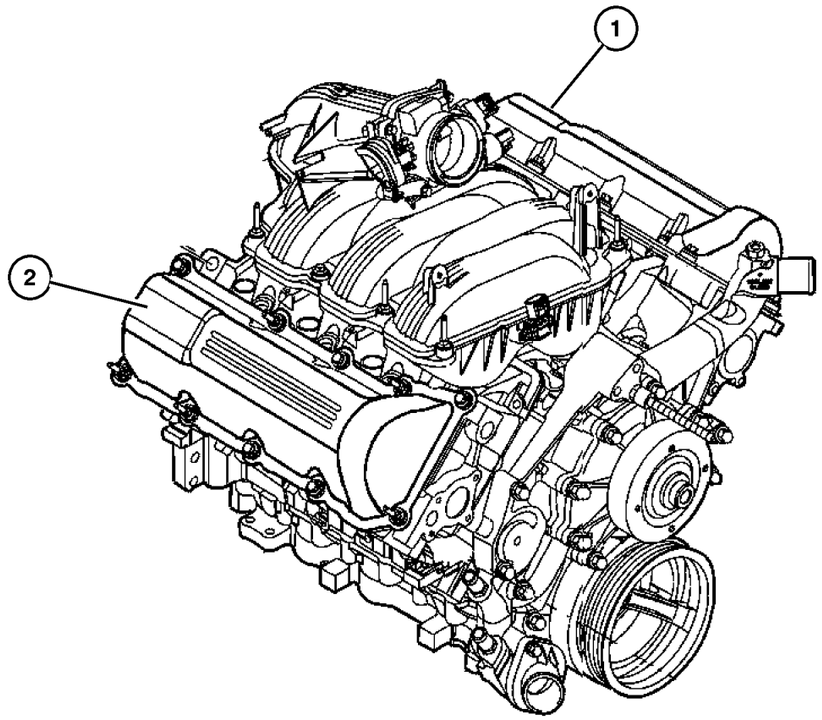

ITEM	PART NUMBER	QTY	LINE	SERIES	BODY	ENGINE	TRANS	TRIM	DESCRIPTION
NOTE:									
Complete New Engines Are Not Serviced. Serviced By New Short Block Only.									
Sales Codes:									
[DBB]=All Manual Transmissions									
[DEH]=6-Speed Manual NSG370 Transmission									
[DGQ]=5-Speed Automatic 5-45RFE Transmission									
[DGV]=4-Speed Automatic VLP Transmission									
[DG0]=All Automatic Transmissions									
[DG6]=4-Speed Automatic 42RLE Transmission									
[DHE]=Command-Trac H.D. Part Time NVG 241 GII Transfer Case									
[DHN]=Command-Trac Part Time NVG 231 Transfer Case									
[DHP]=Selec-Trac Full Time NVG 242 Transfer Case									
[EKG]=3.7L ‘‘Magnum‘‘ V-6 Engine									
[EK0]=All 3.7L 6-Cylinder Gas Engines									
[ENR]=2.8L 4-Cylinder Turbo Diesel Engine									
[EN0]=All 4/5 Cylinder Diesel Engines									
[NAA]=Federal Emissions									
[NAE]=California Emissions									
[NAS]=50 States Emissions									
[NA1]=Export Emissons									
1									ENGINE PACKAGE, Complete, See Note, (NOT SERVICED) (Not Serviced)
2									LABEL, Engine Identification, (NOT SERVICED) (Not Serviced)

2006 Liberty (KJ)

SERIES	LINE	BODY	ENGINE	TRANSMISSION
H =HIGHLINE	T =JEEP - 2WD	74 =SPORT UTILITY 4-DR	EKG=3.7L V6 Eng.	DG6=4-Spd. Auto. 42RLE Trans.
M =MEDIUM	J =JEEP - 4WD		ENR=2.8L 4 Cyl Turbo Diesel Eng.	DGV=4-Spd. Auto. VLP Trans.
P =PREMIUM	U =JEEP - 4WD (RHD)		ENJ=2.5L 4 Cyl 16V Turbo Diesel Eng.	DGQ=5-Spd Auto. 5-45RFE Trans.
			ED1=2.4L 4 Cyl DOHC 16v SMPI Eng.	DEH=6-Speed Man. NSG370 Trans.
				DDD=5-Speed HD Man. Trans.
				DDK=5-Speed HD Man. Trans.

Cylinder Head 3.7L [EKG]
Figure 3.7L-210

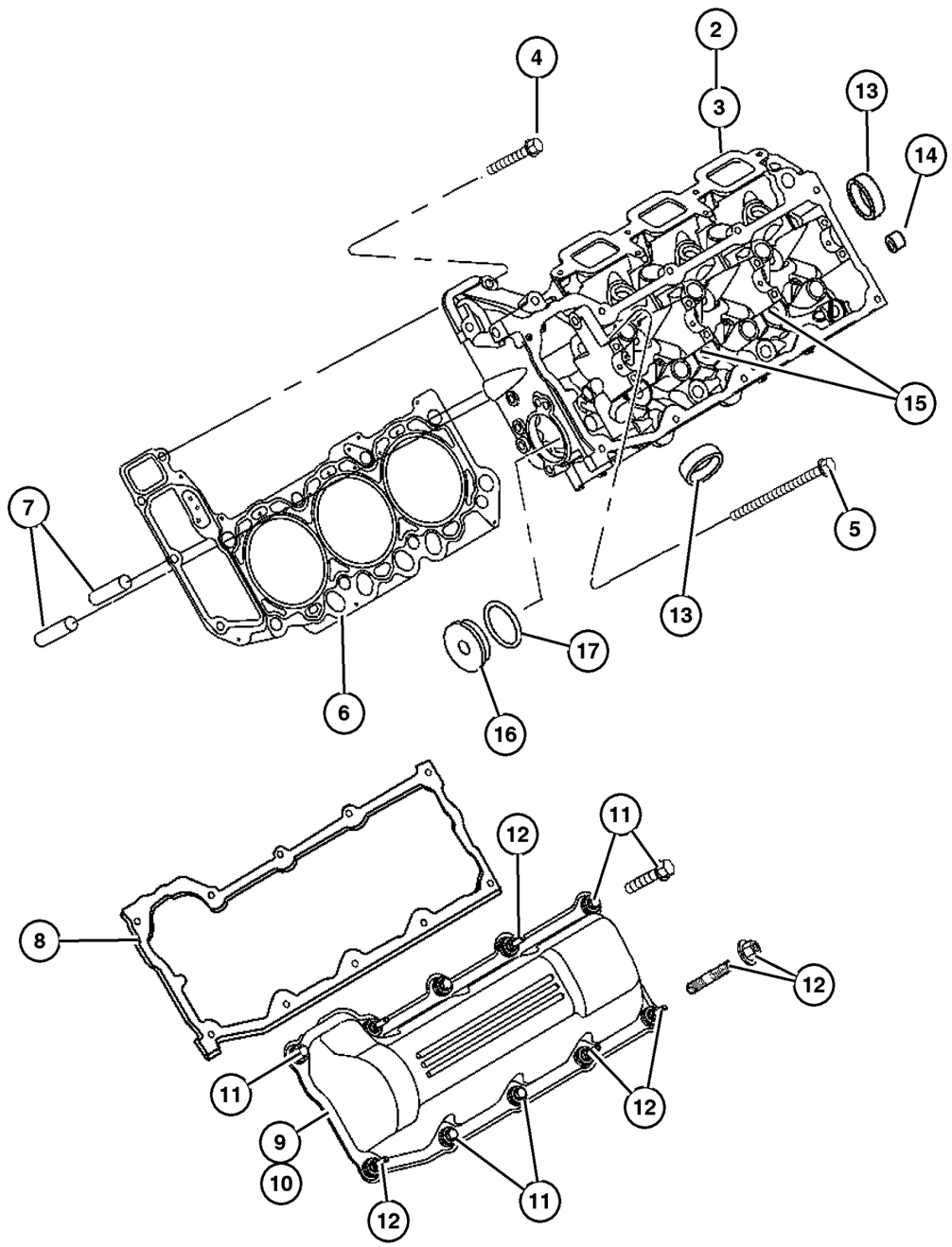

ITEM	PART NUMBER	QTY	LINE	SERIES	BODY	ENGINE	TRANS	TRIM	DESCRIPTION
NOTE: Upper Gasket Package Contains: Cylinder Head and Cylinder Head Cover Gaskets, Intake and Exhaust Manifold Gaskets, Throttle Body Gasket, Valve Guide Seals, Access Hole O-Ring, Oil Fill Housing Gasket and Crankcase Vent Valve O-Ring. New Cylinder Heads Contain: Valve Guides, Valve Seat Inserts, Camshaft Bearing Caps, Freeze Plugs. NOT INCLUDED ARE VALVES, CAMSHAFT.									
Sales Codes:									
[DBB]=All Manual Transmissions									
[DEH]=6-Speed Manual NSG370 Transmission									
[DGQ]=5-Speed Automatic 5-45RFE Transmission									
[DGV]=4-Speed Automatic VLP Transmission									
[DG0]=All Automatic Transmissions									
[DG6]=4-Speed Automatic 42RLE Transmission									
[DHE]=Command-Trac H.D. Part Time NVG 241 GII Transfer Case									
[DHN]=Command-Trac Part Time NVG 231 Transfer Case									
[DHP]=Selec-Trac Full Time NVG 242 Transfer Case									
[EKG]=3.7L ‘‘Magnum‘‘ V-6 Engine									
[EK0]=All 3.7L 6-Cylinder Gas Engines									
[ENR]=2.8L 4-Cylinder Turbo Diesel Engine									
[EN0]=All 4/5 Cylinder Diesel Engines									
[NAA]=Federal Emissions									
[NAE]=California Emissions									
[NAS]=50 States Emissions									
[NA1]=Export Emissions									
-1									GASKET PACKAGE, Engine Upper, See Note
	5170 703AA-	1				EK0	DBB		
		1				EK0	DG0		
2	53020 987AC	1				EK0			HEAD, Cylinder, Left, See Note
3	53020 988AC	1				EK0			HEAD, Cylinder, Right, See Note
4	6506 785AA	8				EK0			SCREW AND WASHER, Hex Head, M8X1.25X31.00, Cylinder Head To Engine Block, Mounting
5	6505 528AA	16				EK0			SCREW AND WASHER, Hex Head, M11X1.50X173, Cylinder Head To Engine Block, Mounting
6	5302 0989	2				EK0			GASKET, Cylinder Head, Left and Right
7	5240 849	4				EK0			DOWEL, Engine Block To Cylinder Head, Mounting
8	53021 958AA	1				EK0			GASKET, Valve Cover Use with Plastic Cylinder Head Covers, Left
	53021 959AA	1				EK0			Use with Plastic Cylinder Head Covers, Right

2006 Liberty (KJ)

SERIES	LINE	BODY	ENGINE	TRANSMISSION
H =HIGHLINE	T =JEEP - 2WD	74 =SPORT UTILITY 4-DR	EKG=3.7L V6 Eng.	DG6=4-Spd. Auto. 42RLE Trans.
M =MEDIUM	J =JEEP - 4WD		ENR=2.8L 4 Cyl Turbo Diesel Eng.	DGV=4-Spd. Auto. VLP Trans.
P =PREMIUM	U =JEEP - 4WD (RHD)		ENJ=2.5L 4 Cyl 16V Turbo Diesel Eng.	DGQ=5-Spd Auto. 5-45RFE Trans.
			ED1=2.4L 4 Cyl DOHC 16v SMPI Eng.	DEH=6-Speed Man. NSG370 Trans.
				DDD=5-Speed HD Man. Trans.
				DDK=5-Speed HD Man. Trans.

Cylinder Head 3.7L [EKG]
Figure 3.7L-210

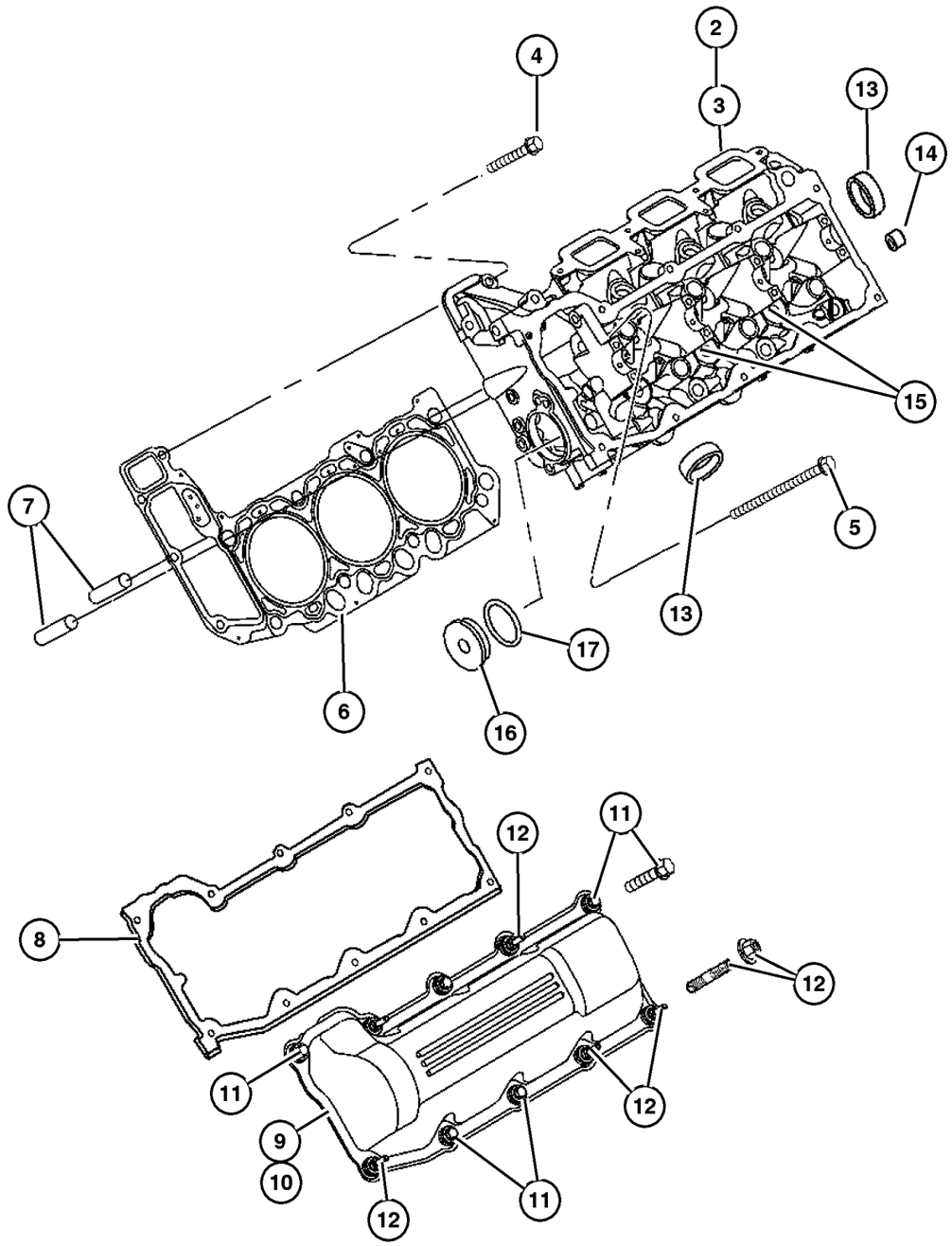

ITEM	PART NUMBER	QTY	LINE	SERIES	BODY	ENGINE	TRANS	TRIM	DESCRIPTION
9	53021 937AA	1				EK0			COVER, Cylinder Head, Left
10	53021 938AA	1				EK0			COVER, Cylinder Head, Right
11									SCREW, M6X1.00X33.00
	6508 296AA	5				EK0			Cylinder Head Cover Left, Mounting
		4				EK0			Cylinder Head Cover Right, Mounting
12									STUD, M6X1.00X61.00 Serviced With Valve Cover Only, (NOT SERVICED) (Not Serviced)
13									PLUG, Core, 1.25 Diameter
	4556 020	2				EK0			Water Jacket Core, Left
		2				EK0			Water Jacket Core, Right
14									PLUG, 0.25-18x.413
	6036 307AA	1				EK0			Left
		1				EK0			Right
15									PLUG, Hex Socket, 3/8-18NPTx.475
	6034 331	2				EK0			Left
		2				EK0			Right
16	5302 1031	1				EK0			PLUG, Access Hole
17	5302 1032	1				EK0			O RING

2006 Liberty (KJ)

SERIES	LINE	BODY	ENGINE	TRANSMISSION
H =HIGHLINE	T =JEEP - 2WD	74 =SPORT UTILITY 4-DR	EKG=3.7L V6 Eng.	DG6=4-Spd. Auto. 42RLE Trans.
M =MEDIUM	J =JEEP - 4WD		ENR=2.8L 4 Cyl Turbo Diesel Eng.	DGV=4-Spd. Auto. VLP Trans.
P =PREMIUM	U =JEEP - 4WD (RHD)		ENJ=2.5L 4 Cyl 16V Turbo Diesel Eng.	DGQ=5-Spd Auto. 5-45RFE Trans.
			ED1=2.4L 4 Cyl DOHC 16v SMPI Eng.	DEH=6-Speed Man. NSG370 Trans.
				DDD=5-Speed HD Man. Trans.
				DDK=5-Speed HD Man. Trans.

Engine Block, 3.7L [EKG]
Figure 3.7L-305

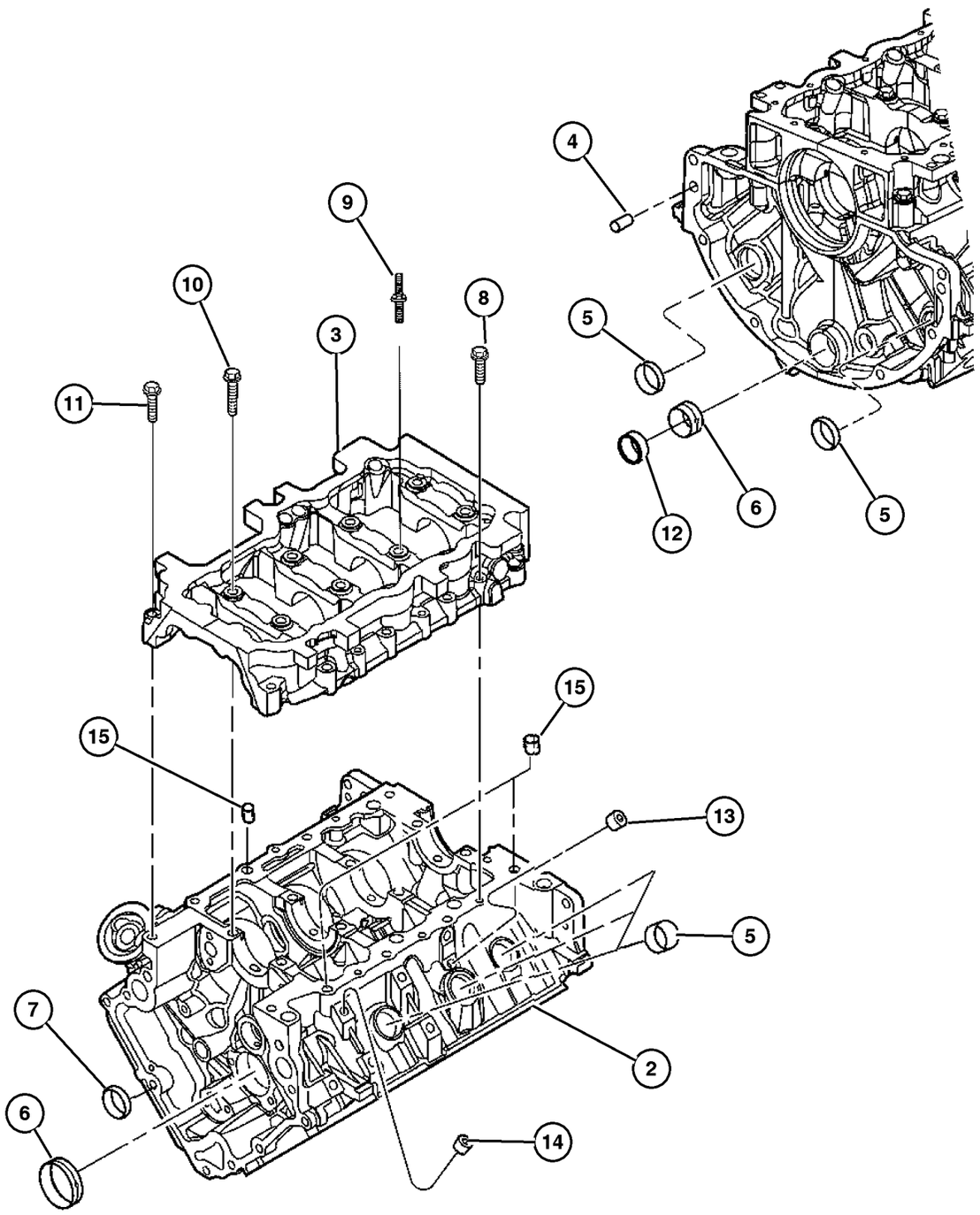

ITEM	PART NUMBER	QTY	LINE	SERIES	BODY	ENGINE	TRANS	TRIM	DESCRIPTION
NOTES: Lower Gasket Package contains: Front and Rear Crankshaft Seals, Oil Pick Up Tube Seal; Oil Pan, Chain Case and Water Pump Gaskets; Chain Case Cover and Oil Tube O-Rings.									
Short Block Assembly Contains:Engine Block, Crankshaft, Crankshaft Bearings, Crankshaft Sensor Target Ring, Thurst Washers, Pistons, Connecting Rods, Piston Rings, Connecting Rod Bearings, Oil Pump, Oil Pickup Tube & Seal, Oil Pan, Balance Shaft, reeze Plugs, Oil Filter.									
Sales Codes:									
[DBB]=All Manual Transmissions									
[DEH]=6-Speed Manual NSG370 Transmission									
[DGQ]=5-Speed Automatic 5-45RFE Transmission									
[DGV]=4-Speed Automatic VLP Transmission									
[DG0]=All Automatic Transmissions									
[DG6]=4-Speed Automatic 42RLE Transmission									
[DHE]=Command-Trac H.D. Part Time NVG 241 GII Transfer Case									
[DHN]=Command-Trac Part Time NVG 231 Transfer Case									
[DHP]=Selec-Trac Full Time NVG 242 Transfer Case									
[EKG]=3.7L ‘‘Magnum‘‘ V-6 Engine									
[EK0]=All 3.7L 6-Cylinder Gas Engines									
[ENR]=2.8L 4-Cylinder Turbo Diesel Engine									
[EN0]=All 4/5 Cylinder Diesel Engines									
[NAA]=Federal Emissions									
[NAE]=California Emissions									
[NAS]=50 States Emissions									
-1									GASKET PACKAGE, Engine Lower, See Note
	5135 793AA-	1				EK0	DBB		
		1				EK0	DG0		
2									BLOCK, SHORT, See Note
	5174 604AA	1				EK0	DBB		
		1				EK0	DG0		
3									BEDPLATE, Serviced With Short Block Only, (NOT SERVICED) (Not Serviced)
4	1122 532	2				EK0			DOWEL, Block To Clutch Housing, 1/2 X 3/4, Mounting
5	6034 804	8				EK0			PLUG, Core, 1.39 Diameter, Cyilnder Block Water Jacket
6									BUSHING, Balance Shaft, Serviced In Short Block Only, (NOT SERVICED) (Not Serviced)
7	6034 804	8				EK0			PLUG, Core, 1.39 Diameter, Cyilnder Block Water Jacket

2006 Liberty (KJ)

SERIES	LINE	BODY	ENGINE	TRANSMISSION
H =HIGHLINE	T =JEEP - 2WD	74 =SPORT UTILITY 4-DR	EKG=3.7L V6 Eng.	DG6=4-Spd. Auto. 42RLE Trans.
M =MEDIUM	J =JEEP - 4WD		ENR=2.8L 4 Cyl Turbo Diesel Eng.	DGV=4-Spd. Auto. VLP Trans.
P =PREMIUM	U =JEEP - 4WD (RHD)		ENJ=2.5L 4 Cyl 16V Turbo Diesel Eng.	DGQ=5-Spd Auto. 5-45RFE Trans.
			ED1=2.4L 4 Cyl DOHC 16v SMPI Eng.	DEH=6-Speed Man. NSG370 Trans.
				DDD=5-Speed HD Man. Trans.
				DDK=5-Speed HD Man. Trans.

Engine Block, 3.7L [EKG]
Figure 3.7L-305

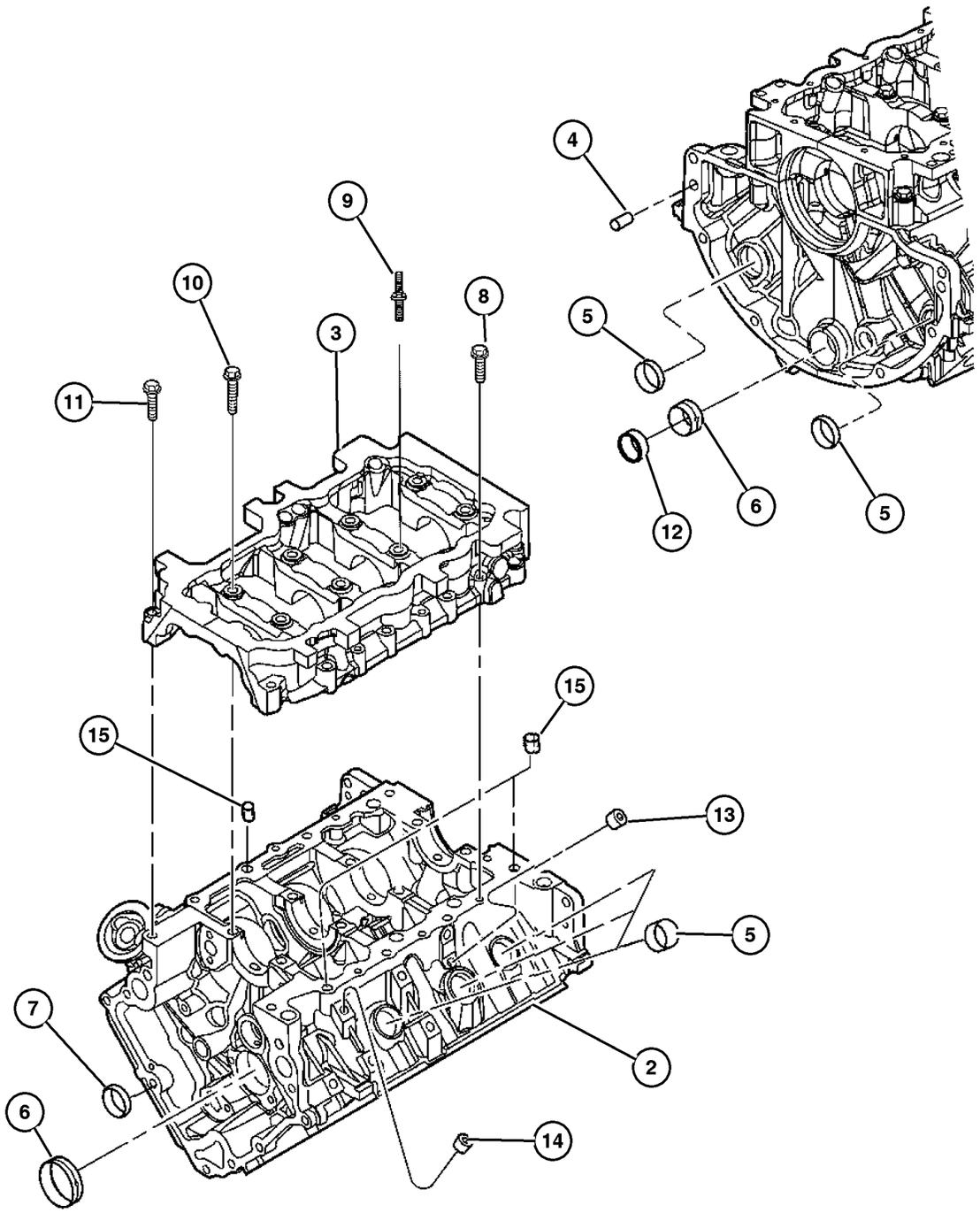

ITEM	PART NUMBER	QTY	LINE	SERIES	BODY	ENGINE	TRANS	TRIM	DESCRIPTION
8	6102 156AA	5				EK0			SCREW, Hex Flange Head, M8x1. 25x44, Cyilnder Block To Bedplate, Mounting
9	6506 187AA	2				EK0			STUD, M11X1.50XM8X1.25X142.75, Crankshaft Bearing Cap, Mounting
10	6505 394AA	6				EK0			SCREW AND WASHER, M11X1. 50X90.0, Bedplate To Block, Mounting
11	6504 410	2				EK0			SCREW, Hex Head, M10X1.50X55. 00, Bedplate To Block, Mounting
12	4663 942	1				EK0			PLUG, Core, 1.50 Diameter, Engine Block Core Hole
13	6036 307AA	3				EK0			PLUG, 250-18X.413, Engine Block Coolant Drain
14	6036 114AA	4				EK0			PLUG, Pipe, 0.500-14X.560, Engine Block Oil Hole
15	53010 533AA	5				EK0			DOWEL, Engine Block To Front Cover, Mounting

2006 Liberty (KJ)

SERIES	LINE	BODY	ENGINE	TRANSMISSION
H =HIGHLINE	T =JEEP - 2WD	74 =SPORT UTILITY 4-DR	EKG=3.7L V6 Eng.	DG6=4-Spd. Auto. 42RLE Trans.
M =MEDIUM	J =JEEP - 4WD		ENR=2.8L 4 Cyl Turbo Diesel Eng.	DGV=4-Spd. Auto. VLP Trans.
P =PREMIUM	U =JEEP - 4WD (RHD)		ENJ=2.5L 4 Cyl 16V Turbo Diesel Eng.	DGQ=5-Spd Auto. 5-45RFE Trans.
			ED1=2.4L 4 Cyl DOHC 16v SMPI Eng.	DEH=6-Speed Man. NSG370 Trans.
				DDD=5-Speed HD Man. Trans.
				DDK=5-Speed HD Man. Trans.

Crankshaft, Pistons and Flywheel, 3.7L [EKG]
Figure 3.7L-405

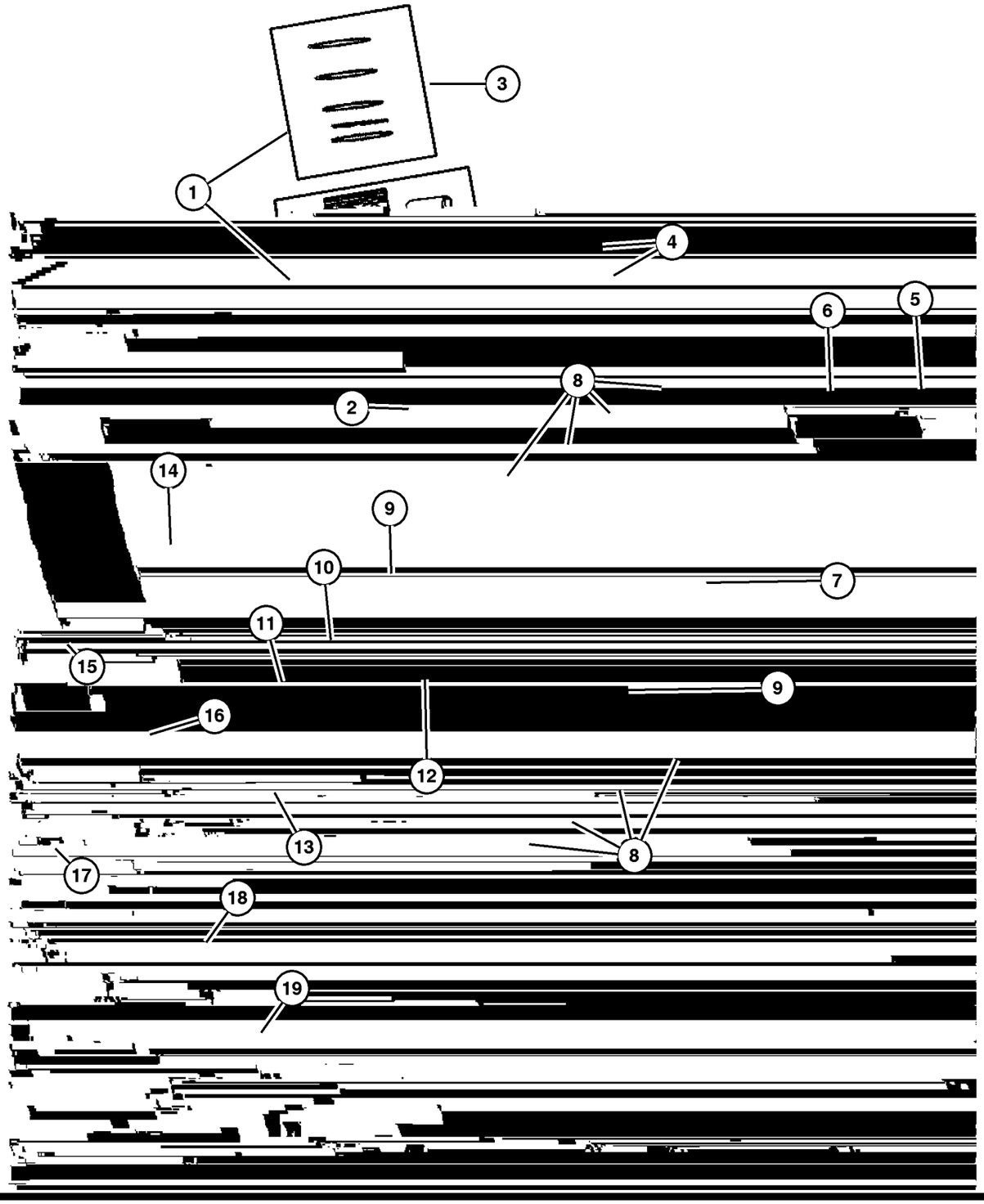

ITEM	PART NUMBER	QTY	LINE	SERIES	BODY	ENGINE	TRANS	TRIM	DESCRIPTION
NOTE:									
For Crankshaft Indentification, Stamping Location and Bearing Information Refer to the Service Manual.									
For Bearing Selection Sizes Please Refer To Service Manual Group 9, Bearings Crankshaft Main, [Select Fit Identification]									
Sales Codes:									
[DBB]=All Manual Transmissions									
[DEH]=6-Speed Manual NSG370 Transmission									
[DGQ]=5-Speed Automatic 5-45RFE Transmission									
[DGV]=4-Speed Automatic VLP Transmission									
[DG0]=All Automatic Transmissions									
[DG6]=4-Speed Automatic 42RLE Transmission									
[DHE]=Command-Trac H.D. Part Time NVG 241 GII Transfer Case									
[DHN]=Command-Trac Part Time NVG 231 Transfer Case									
[DHP]=Selec-Trac Full Time NVG 242 Transfer Case									
[EKG]=3.7L ‘‘Magnum‘‘ V-6 Engine									
[EK0]=All 3.7L 6-Cylinder Gas Engines									
[ENR]=2.8L 4-Cylinder Turbo Diesel Engine									
[EN0]=All 4/5 Cylinder Diesel Engines									
[NAA]=Federal Emissions									
[NAE]=California Emissions									
[NAS]=50 States Emissions									
[NA1]=Export Emisssions									
1									PISTON PIN AND ROD, STD
	5019 316AA	1				EK0	DBB		
		1				EK0	DG0		
2	6508 504AA	12				EK0			BOLT, Connecting Rod, M9X1.0X46.
3	5012 364AD	6				EK0			00, Connecting Rod Cap, Mounting RING PACKAGE, Piston, Standard Size, 1 Package Will Do 1 Piston
4	5019 447AA	6				EK0			BEARING PACKAGE, Connecting Rod, Standard, 1 Package Will Do One Connecting Rod
5	6504 415	1				EK0			SCREW AND WASHER, M14X1. 50X112.00, Dampner To Crankshaft, Mounting
6	53020 689AB	1				EK0			DAMPER, Crankshaft
7	53020 959AB	1				EK0			CRANKSHAFT
8									BEARING PACKAGE, Crankshaft, A Grade
	5066 733AB	4				EK0	DBB		[R] Crankshaft Main 1 And 4
		4				EK0	DG0		[R] Crankshaft Main 1 And 4
	5066 734AB	4				EK0	DBB		[R] Crankshaft Main 2 And 3
		4				EK0	DG0		[R] Crankshaft Main 2 And 3

2006 Liberty (KJ)

SERIES	LINE	BODY	ENGINE	TRANSMISSION
H =HIGHLINE	T =JEEP - 2WD	74 =SPORT UTILITY 4-DR	EKG=3.7L V6 Eng.	DG6=4-Spd. Auto. 42RLE Trans.
M =MEDIUM	J =JEEP - 4WD		ENR=2.8L 4 Cyl Turbo Diesel Eng.	DGV=4-Spd. Auto. VLP Trans.
P =PREMIUM	U =JEEP - 4WD (RHD)		ENJ=2.5L 4 Cyl 16V Turbo Diesel Eng.	DGQ=5-Spd Auto. 5-45RFE Trans.
			ED1=2.4L 4 Cyl DOHC 16v SMPI Eng.	DEH=6-Speed Man. NSG370 Trans.
				DDD=5-Speed HD Man. Trans.
				DDK=5-Speed HD Man. Trans.

Crankshaft, Pistons and Flywheel, 3.7L [EKG]
Figure 3.7L-405

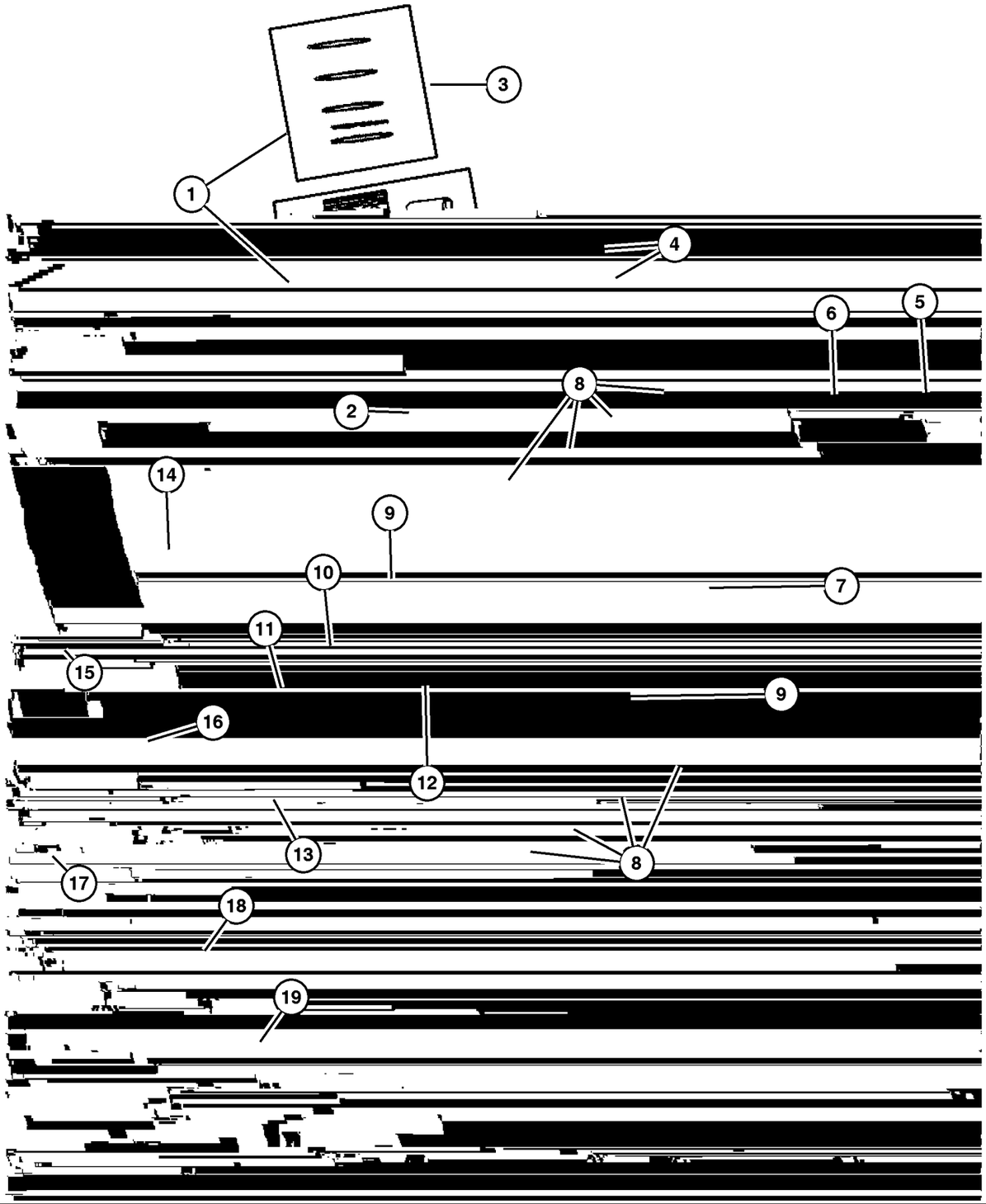

ITEM	PART NUMBER	QTY	LINE	SERIES	BODY	ENGINE	TRANS	TRIM	DESCRIPTION
	5066 735AB	4				EK0	DBB		[S] Crankshaft Main 1 And 4
		4				EK0	DG0		[S] Crankshaft Main 1 And 4
	5066 736AB	4				EK0	DBB		[S] Crankshaft Main 2 And 3
		4				EK0	DG0		[S] Crankshaft Main 2 And 3
	5066 737AB	4				EK0	DBB		[T] Crankshaft Main 1 And 4
		4				EK0	DG0		[T] Crankshaft Main 1 And 4
	5066 738AB	4				EK0	DBB		[T] Crankshaft Main 2 And 3
		4				EK0	DG0		[T] Crankshaft Main 2 And 3
	5066 739AB	4				EK0	DG0		[U] Crankshaft Main 1 And 4
		4				EK0			[U] Crankshaft Main 1 And 4
	5066 740AB	4				EK0	DBB		[U] Crankshaft Main 2 And 3
		4				EK0	DG0		[U] Crankshaft Main 2 And 3
9									WASHER PACKAGE, Washer, Thrust
	5012 356AC	1				EK0	DBB		
		1				EK0	DG0		
10									RING, Tone, Serviced With Crankshaft Only, (NOT SERVICED) (Not Serviced)
11	6504 480	3				EK0			SCREW, M6x1x25
12									BEARING, Pilot
	53009 180AB	1				EK0	DBB		
	4736 483AA	1				EK0	DG0		Sleeve
13	53020 788AB	1				EK0			SEAL, Crankshaft Bearing Oil
14	52104 579AB	1				EK0	DBB		FLYWHEEL
15	6507 503AA	8				EK0	DBB		SCREW, M10X1.00X30.80, Flywheel To Crankshaft, Mounting
16	4736 253AA	1				EK0	DG0		PLATE, Torque Converter Drive
17	6503 465	8				EK0	DG0		BOLT, Drive Plate and Flywheel, M10X1.00X18.00, Mounting
18									CONVERTER PACKAGE, Torque
	5093 944AB	1	J, U				DG6		
		1	T				DG6		
		1	J, U				DGV		
		1	T				DGV		
19	1949 765	4					DGQ		SCREW, Hex Head Header Point, .312-24x.44, Driveplate To Torque Converter, Mounting

2006 Liberty (KJ)

SERIES	LINE	BODY	ENGINE	TRANSMISSION
H =HIGHLINE	T =JEEP - 2WD	74 =SPORT UTILITY 4-DR	EKG=3.7L V6 Eng.	DG6=4-Spd. Auto. 42RLE Trans.
M =MEDIUM	J =JEEP - 4WD		ENR=2.8L 4 Cyl Turbo Diesel Eng.	DGV=4-Spd. Auto. VLP Trans.
P =PREMIUM	U =JEEP - 4WD (RHD)		ENJ=2.5L 4 Cyl 16V Turbo Diesel Eng.	DGQ=5-Spd Auto. 5-45RFE Trans.
			ED1=2.4L 4 Cyl DOHC 16v SMPI Eng.	DEH=6-Speed Man. NSG370 Trans.
				DDD=5-Speed HD Man. Trans.
				DDK=5-Speed HD Man. Trans.

Camshaft And Valves, 3.7L [EKG]
Figure 3.7L-505

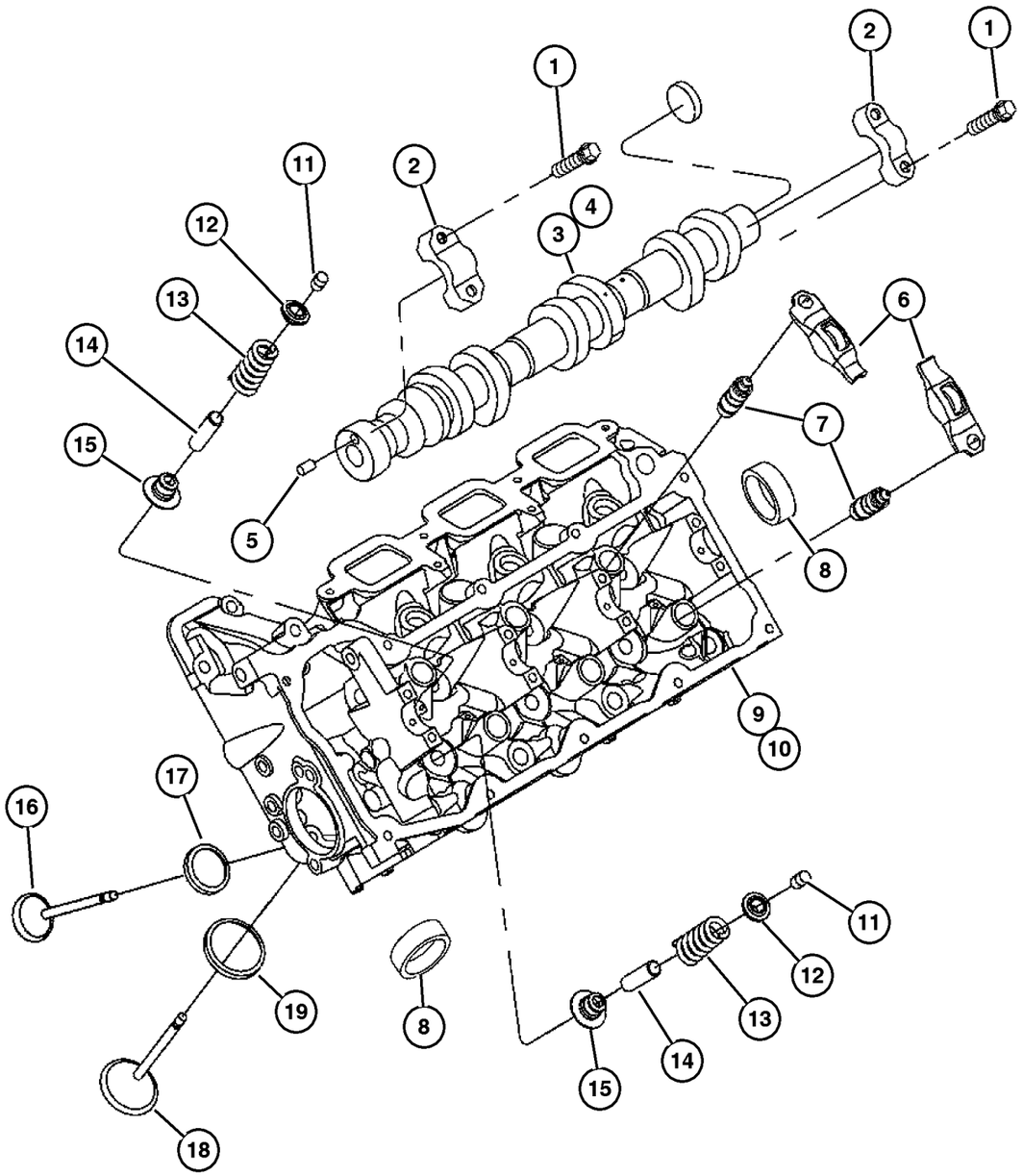

ITEM	PART NUMBER	QTY	LINE	SERIES	BODY	ENGINE	TRANS	TRIM	DESCRIPTION
NOTE:									
Sales Codes:									
[DBB]=All Manual Transmissions									
[DEH]=6-Speed Manual NSG370 Transmission									
[DGQ]=5-Speed Automatic 5-45RFE Transmission									
[DGV]=4-Speed Automatic VLP Transmission									
[DG0]=All Automatic Transmissions									
[DG6]=4-Speed Automatic 42RLE Transmission									
[DHE]=Command-Trac H.D. Part Time NVG 241 GII Transfer Case									
[DHN]=Command-Trac Part Time NVG 231 Transfer Case									
[DHP]=Selec-Trac Full Time NVG 242 Transfer Case									
[EKG]=3.7L ‘‘Magnum‘‘ V-6 Engine									
[EK0]=All 3.7L 6-Cylinder Gas Engines									
[ENR]=2.8L 4-Cylinder Turbo Diesel Engine									
[EN0]=All 4/5 Cylinder Diesel Engines									
[NAA]=Federal Emissions									
[NAE]=California Emissions									
[NAS]=50 States Emissions									
[NA1]=Export Emissons									
1									SCREW, M6x1x40, Cam Bearing Cap
	6505 034AA	8				EK0			Left, Mounting
		8				EK0			Right, Mounting
2									CAP, Serviced With Cylinder Head Only, (NOT SERVICED) (Not Serviced)
3	53021 893AA	1				EK0			CAMSHAFT, Engine, Left
4	53021 892AA	1				EK0			CAMSHAFT, Engine, Right
5									DOWEL, M6x14
	6100 902	1				EK0			Right
		1				EK0			Left
6									ROCKER ARM, Valve, 6 Per Cylinder Head
	53021 913AB	6				EK0			Right
		6				EK0			Left
7									ADJUSTER, Valve Lash, 6 Per Cylinder Head
	53021 894AA	6				EK0			Right
		6				EK0			Left
8									PLUG, Core, 1.25 Diameter, 2 Per Cylinder Head
	4556 020	2				EK0			Water Jacket Core, Right

2006 Liberty (KJ)

SERIES	LINE	BODY	ENGINE	TRANSMISSION
H =HIGHLINE	T =JEEP - 2WD	74 =SPORT UTILITY 4-DR	EKG=3.7L V6 Eng.	DG6=4-Spd. Auto. 42RLE Trans.
M =MEDIUM	J =JEEP - 4WD		ENR=2.8L 4 Cyl Turbo Diesel Eng.	DGV=4-Spd. Auto. VLP Trans.
P =PREMIUM	U =JEEP - 4WD (RHD)		ENJ=2.5L 4 Cyl 16V Turbo Diesel Eng.	DGQ=5-Spd Auto. 5-45RFE Trans.
			ED1=2.4L 4 Cyl DOHC 16v SMPI Eng.	DEH=6-Speed Man. NSG370 Trans.
				DDD=5-Speed HD Man. Trans.
				DDK=5-Speed HD Man. Trans.

Camshaft And Valves, 3.7L [EKG]
Figure 3.7L-505

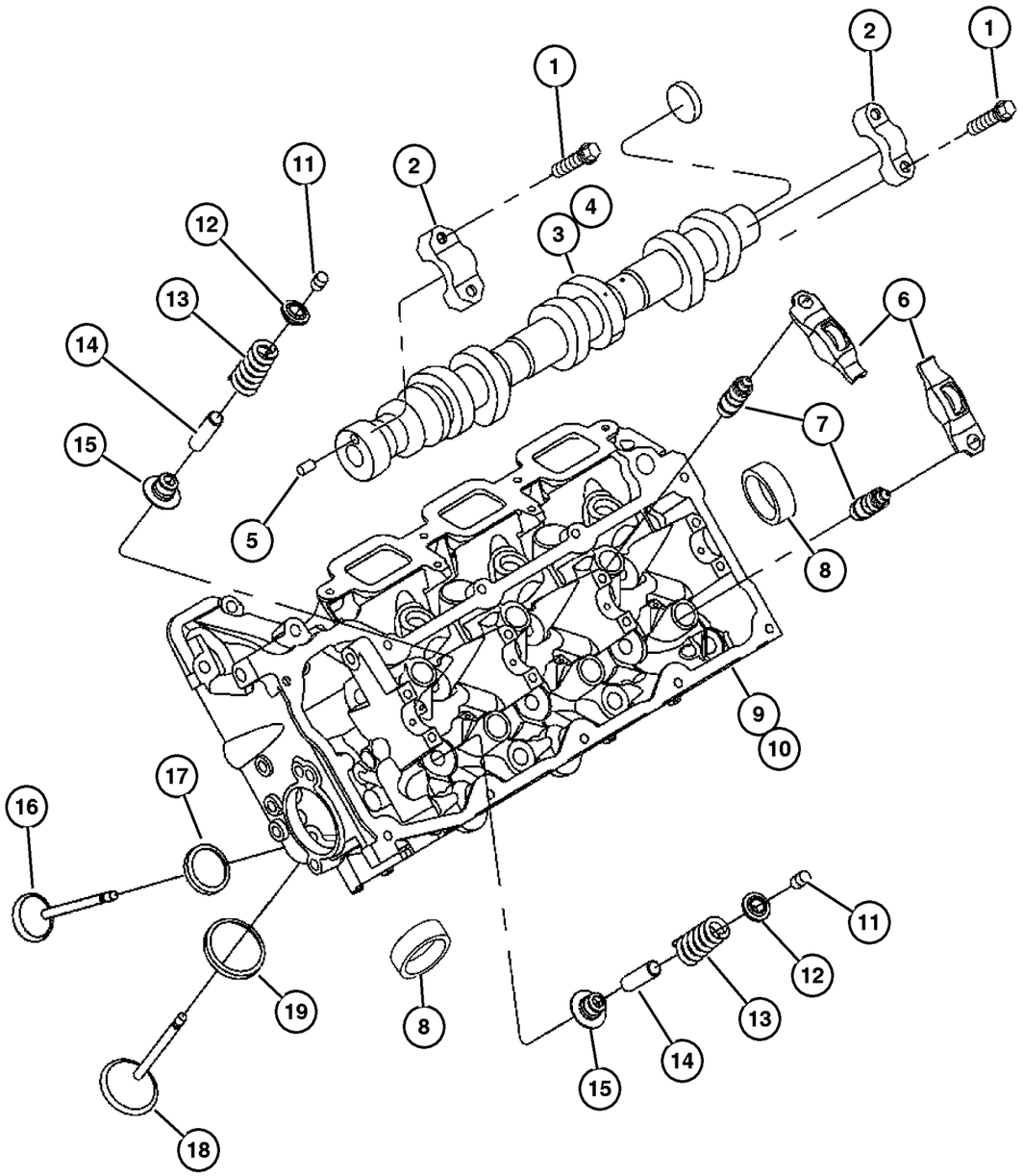

ITEM	PART NUMBER	QTY	LINE	SERIES	BODY	ENGINE	TRANS	TRIM	DESCRIPTION
		2				EK0			Water Jacket Core, Left
9	53021 941AA	1				EK0			HEAD, Cylinder, Left, Bare
10	53021 942AA	1				EK0			HEAD, Cylinder, Right, Bare
11									LOCK, Valve Spring Retainer, 12 Per Cylinder Head
	4536 513AB	12				EK0			Right
		12				EK0			Left
12									RETAINER, Valve Spring
	4781 090AA	6				EK0			Right
		6				EK0			Left
13									SPRING, Valve
	53021 873AA	3				EK0			Exhaust, Right
		3				EK0			Exhaust, Left
	53021 887AA	3				EK0			Intake, Right
		3				EK0			Intake, Left
14									INSERT, Valve Guide, Serviced With Cylinder Head Only, (NOT SERVICED) (Not Serviced)
15									SEAL, Valve Guide, 6 Per Cylinder Head
	53020 752AD	6				EK0			Right
		6				EK0			Left
16									VALVE, Exhaust, Standard, 3 Per Cylinder Head
	53021 644AB	3				EK0			Right
		3				EK0			Left
17									SEAT, Exhaust Valve, Serviced With Cylinder Head Only, (NOT SERVICED) (Not Serviced)
18									VALVE, Intake, Standard, 3 Per Cylinder Head
	53020 747AB	3				EK0			Right
		3				EK0			Left
19									SEAT, Intake Valve, Serviced With Head Only, (NOT SERVICED) (Not Serviced)

2006 Liberty (KJ)

SERIES	LINE	BODY	ENGINE	TRANSMISSION
H =HIGHLINE	T =JEEP - 2WD	74 =SPORT UTILITY 4-DR	EKG=3.7L V6 Eng.	DG6=4-Spd. Auto. 42RLE Trans.
M =MEDIUM	J =JEEP - 4WD		ENR=2.8L 4 Cyl Turbo Diesel Eng.	DGV=4-Spd. Auto. VLP Trans.
P =PREMIUM	U =JEEP - 4WD (RHD)		ENJ=2.5L 4 Cyl 16V Turbo Diesel Eng.	DGQ=5-Spd Auto. 5-45RFE Trans.
			ED1=2.4L 4 Cyl DOHC 16v SMPI Eng.	DEH=6-Speed Man. NSG370 Trans.
				DDD=5-Speed HD Man. Trans.
				DDK=5-Speed HD Man. Trans.

AR = Use as required - = Non illustrated part # = New this model year

September 20, 2005

Timing Cover, 3.7L [EKG]
Figure 3.7L-605

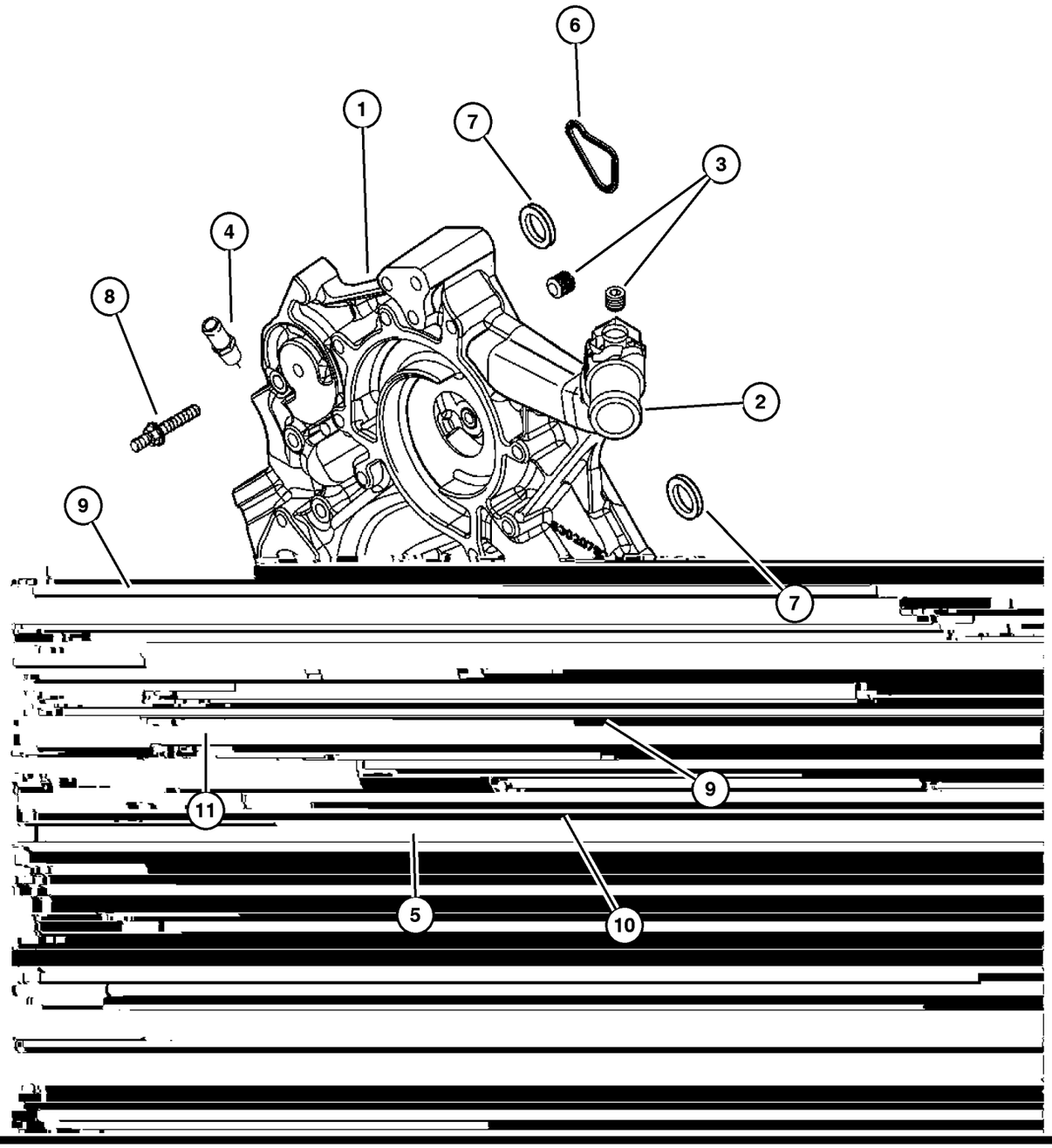

ITEM	PART NUMBER	QTY	LINE	SERIES	BODY	ENGINE	TRANS	TRIM	DESCRIPTION
NOTE:									
Sales Codes:									
[DBB]=All Manual Transmissions									
[DEH]=6-Speed Manual NSG370 Transmission									
[DGQ]=5-Speed Automatic 5-45RFE Transmission									
[DGV]=4-Speed Automatic VLP Transmission									
[DG0]=All Automatic Transmissions									
[DG6]=4-Speed Automatic 42RLE Transmission									
[DHE]=Command-Trac H.D. Part Time NVG 241 GII Transfer Case									
[DHN]=Command-Trac Part Time NVG 231 Transfer Case									
[DHP]=Selec-Trac Full Time NVG 242 Transfer Case									
[EKG]=3.7L ‘‘Magnum‘‘ V-6 Engine									
[EK0]=All 3.7L 6-Cylinder Gas Engines									
[ENR]=2.8L 4-Cylinder Turbo Diesel Engine									
[EN0]=All 4/5 Cylinder Diesel Engines									
[NAA]=Federal Emissions									
[NAE]=California Emissions									
[NAS]=50 States Emissions									
[NA1]=Export Emissons									
1	53021 238AB	1				EK0			COVER, Chain Case
2									PIPE FITTING, Chain Case Cover, .375-18x2, Serviced With Cover, (NOT SERVICED) (Not Serviced)
3	6034 331	3				EK0			PLUG, Hex Socket, 3/8-18NPTx.475
4	6035 854	2				EK0			NIPPLE, 0.375-18X2.00
5	53021 313AA	1				EK0			SEAL, Crankshaft Oil, Front
6	53021 226AA	1				EK0			GASKET, Chain Case Cover
7	53021 239AA	2				EK0			O RING
8	6505 293AA	1				EK0			STUD, M10X1.50X.437-14X145.20, Timing Cover To Engine Block, Mounting
9	6507 776AA	3				EK0			SCREW, Hex Flange Head, M10X1.50X87.00, Timing Cover To Engine Block, Mounting
10	6102 380AA	5				EK0			SCREW, Hex Flange Head, M10X1.50X45.00, Timing Cover To Engine Block, Mounting
11	6102 381AA	5				EK0			SCREW, Hex Flange Head, M10X1.50X65.00, Timing Cover To Engine Block, Mounting

2006 Liberty (KJ)

SERIES	LINE	BODY	ENGINE	TRANSMISSION
H =HIGHLINE	T =JEEP - 2WD	74 =SPORT UTILITY 4-DR	EKG=3.7L V6 Eng.	DG6=4-Spd. Auto. 42RLE Trans.
M =MEDIUM	J =JEEP - 4WD		ENR=2.8L 4 Cyl Turbo Diesel Eng.	DGV=4-Spd. Auto. VLP Trans.
P =PREMIUM	U =JEEP - 4WD (RHD)		ENJ=2.5L 4 Cyl 16V Turbo Diesel Eng.	DGQ=5-Spd Auto. 5-45RFE Trans.
			ED1=2.4L 4 Cyl DOHC 16v SMPI Eng.	DEH=6-Speed Man. NSG370 Trans.
				DDD=5-Speed HD Man. Trans.
				DDK=5-Speed HD Man. Trans.

Timing Chain and Guides, 3.7L [EKG]
Figure 3.7L-610

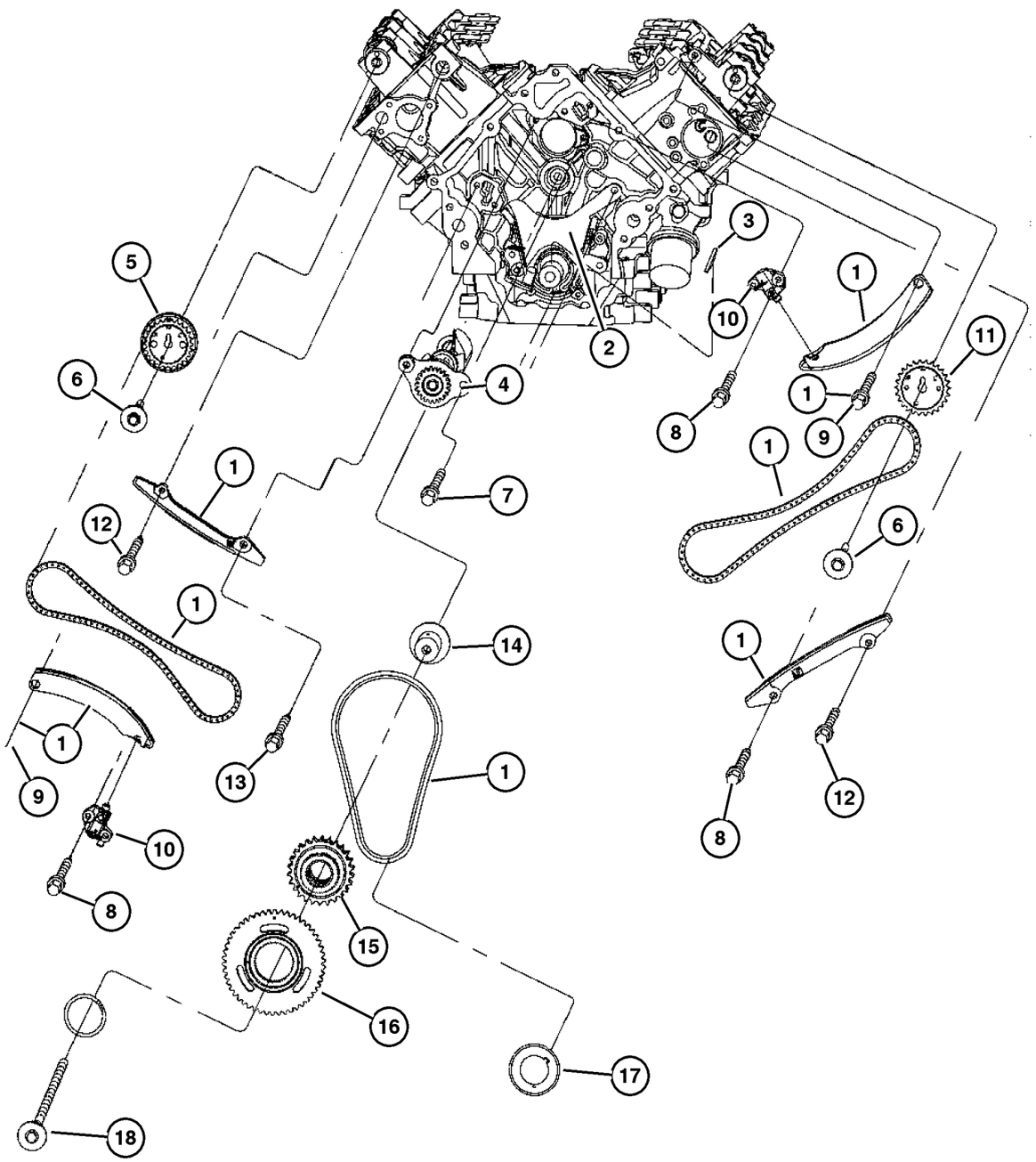

ITEM	PART NUMBER	QTY	LINE	SERIES	BODY	ENGINE	TRANS	TRIM	DESCRIPTION
NOTE:									
Sales Codes:									
[DBB]=All Manual Transmissions									
[DEH]=6-Speed Manual NSG370 Transmission									
[DGQ]=5-Speed Automatic 5-45RFE Transmission									
[DGV]=4-Speed Automatic VLP Transmission									
[DG0]=All Automatic Transmissions									
[DG6]=4-Speed Automatic 42RLE Transmission									
[DHE]=Command-Trac H.D. Part Time NVG 241 GII Transfer Case									
[DHN]=Command-Trac Part Time NVG 231 Transfer Case									
[DHP]=Selec-Trac Full Time NVG 242 Transfer Case									
[EKG]=3.7L ‘‘Magnum‘‘ V-6 Engine									
[EK0]=All 3.7L 6-Cylinder Gas Engines									
[ENR]=2.8L 4-Cylinder Turbo Diesel Engine									
[EN0]=All 4/5 Cylinder Diesel Engines									
[NAA]=Federal Emissions									
[NAE]=California Emissions									
[NAS]=50 States Emissions									
[NA1]=Export Emissons									
1	5019 423AD	1				EK0			TIMING DRIVE PACKAGE, Engine
2	5302 0681	1				EK0			TENSIONER, Chain, Primary, Also serviced in Timing Drive Package
3	6504 471	1				EK0			KEY, Woodruff, M5X62.00
4	5302 0818	1				EK0			SHAFT, Balance
5	53021 291AD	1				EK0			SPROCKET, Camshaft, Right
6	6504 429	2				EK0			SCREW AND WASHER, Hex, M12X1.75X35.00, Sprocket To Camshaft, Mounting
7	6100 295	1				EK0			SCREW AND WASHER, Hex Head, M8x1.25x20, Balance Shaft To Engine Block, Mounting
8	6503 257	5				EK0			BOLT, Hex Head, M8x1.25x37.50
9	6506 028AA	2				EK0			SCREW, M8X1.25X45.0, Secondary Tensioner Arm To Cylinder Head, Mounting
10									TENSIONER, Chain, Secondary
	53021 249AA	1				EK0			Right, Right
	53021 250AA	1				EK0			Left, Left
11	53021 290AA	1				EK0			SPROCKET, Camshaft, Left
12	6102 111AA	2				EK0			SCREW AND WASHER, M8X1.25X45.00, Timing Guide To Cylinder Head, Mounting

2006 Liberty (KJ)

SERIES	LINE	BODY	ENGINE	TRANSMISSION
H =HIGHLINE	T =JEEP - 2WD	74 =SPORT UTILITY 4-DR	EKG=3.7L V6 Eng.	DG6=4-Spd. Auto. 42RLE Trans.
M =MEDIUM	J =JEEP - 4WD		ENR=2.8L 4 Cyl Turbo Diesel Eng.	DGV=4-Spd. Auto. VLP Trans.
P =PREMIUM	U =JEEP - 4WD (RHD)		ENJ=2.5L 4 Cyl 16V Turbo Diesel Eng.	DGQ=5-Spd Auto. 5-45RFE Trans.
			ED1=2.4L 4 Cyl DOHC 16v SMPI Eng.	DEH=6-Speed Man. NSG370 Trans.
				DDD=5-Speed HD Man. Trans.
				DDK=5-Speed HD Man. Trans.

Timing Chain and Guides, 3.7L [EKG]
Figure 3.7L-610

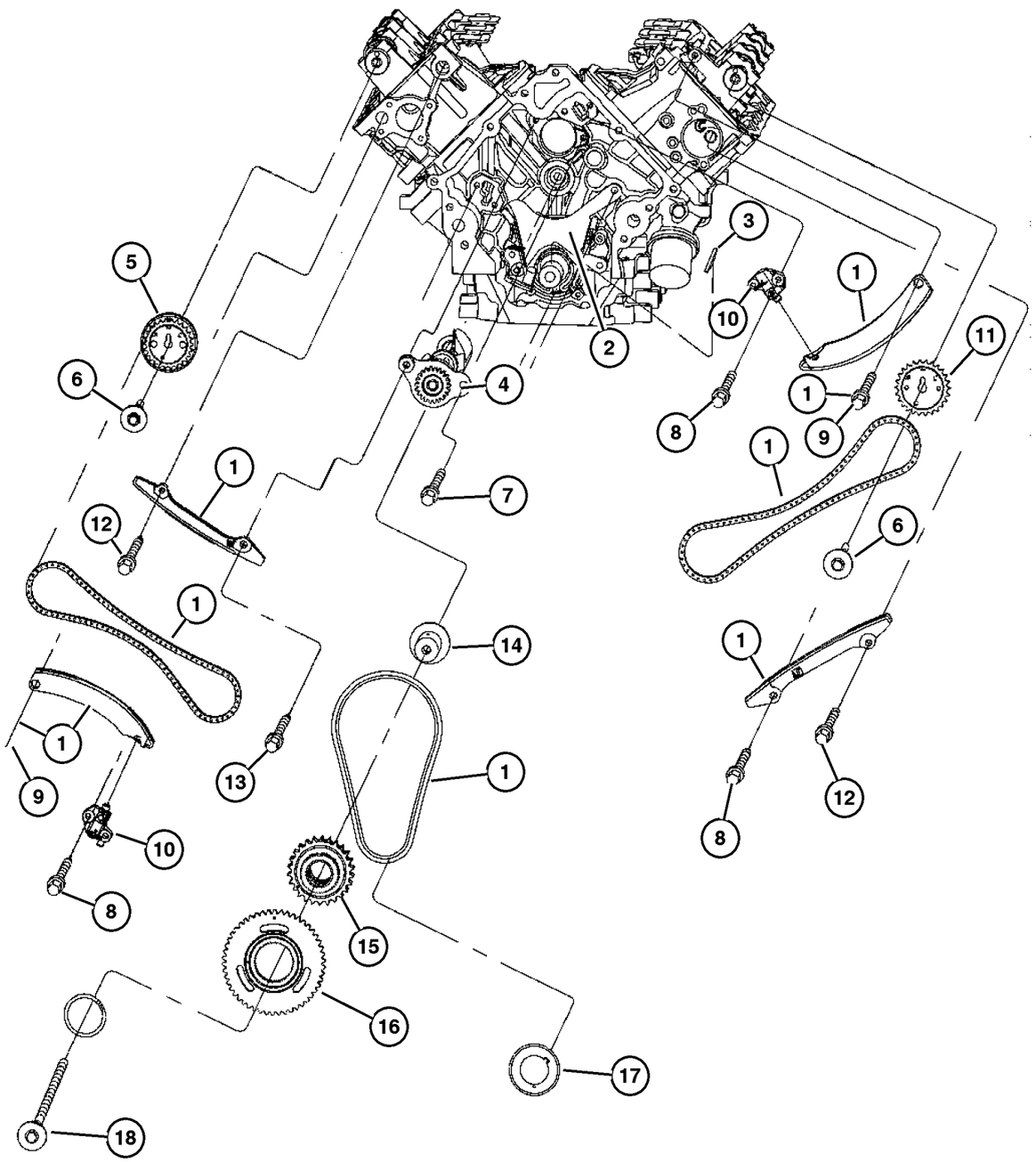

ITEM	PART NUMBER	QTY	LINE	SERIES	BODY	ENGINE	TRANS	TRIM	DESCRIPTION
13	6102 190AA	1				EK0			SCREW, M8X1.25X57.0, Chain Guide Right, Mounting
14	5302 0835	1				EK0			SHAFT, Idler
15	53021 298AB	1				EK0			SHAFT, Balance, Driver
16	53021 170AA	1				EK0			SPROCKET, Idler
17	5302 0679	1				EK0			SPROCKET, Crankshaft
18	6504 370	1				EK0			SCREW AND WASHER, Hex, M10X1.50X110.00, Idler Sprocket To Engine Block, Mounting

2006 Liberty (KJ)

SERIES	LINE	BODY	ENGINE	TRANSMISSION
H =HIGHLINE	T =JEEP - 2WD	74 =SPORT UTILITY 4-DR	EKG=3.7L V6 Eng.	DG6=4-Spd. Auto. 42RLE Trans.
M =MEDIUM	J =JEEP - 4WD		ENR=2.8L 4 Cyl Turbo Diesel Eng.	DGV=4-Spd. Auto. VLP Trans.
P =PREMIUM	U =JEEP - 4WD (RHD)		ENJ=2.5L 4 Cyl 16V Turbo Diesel Eng.	DGQ=5-Spd Auto. 5-45RFE Trans.
			ED1=2.4L 4 Cyl DOHC 16v SMPI Eng.	DEH=6-Speed Man. NSG370 Trans.
				DDD=5-Speed HD Man. Trans.
				DDK=5-Speed HD Man. Trans.

Engine Oiling, 3.7L [EKG]
Figure 3.7L-705

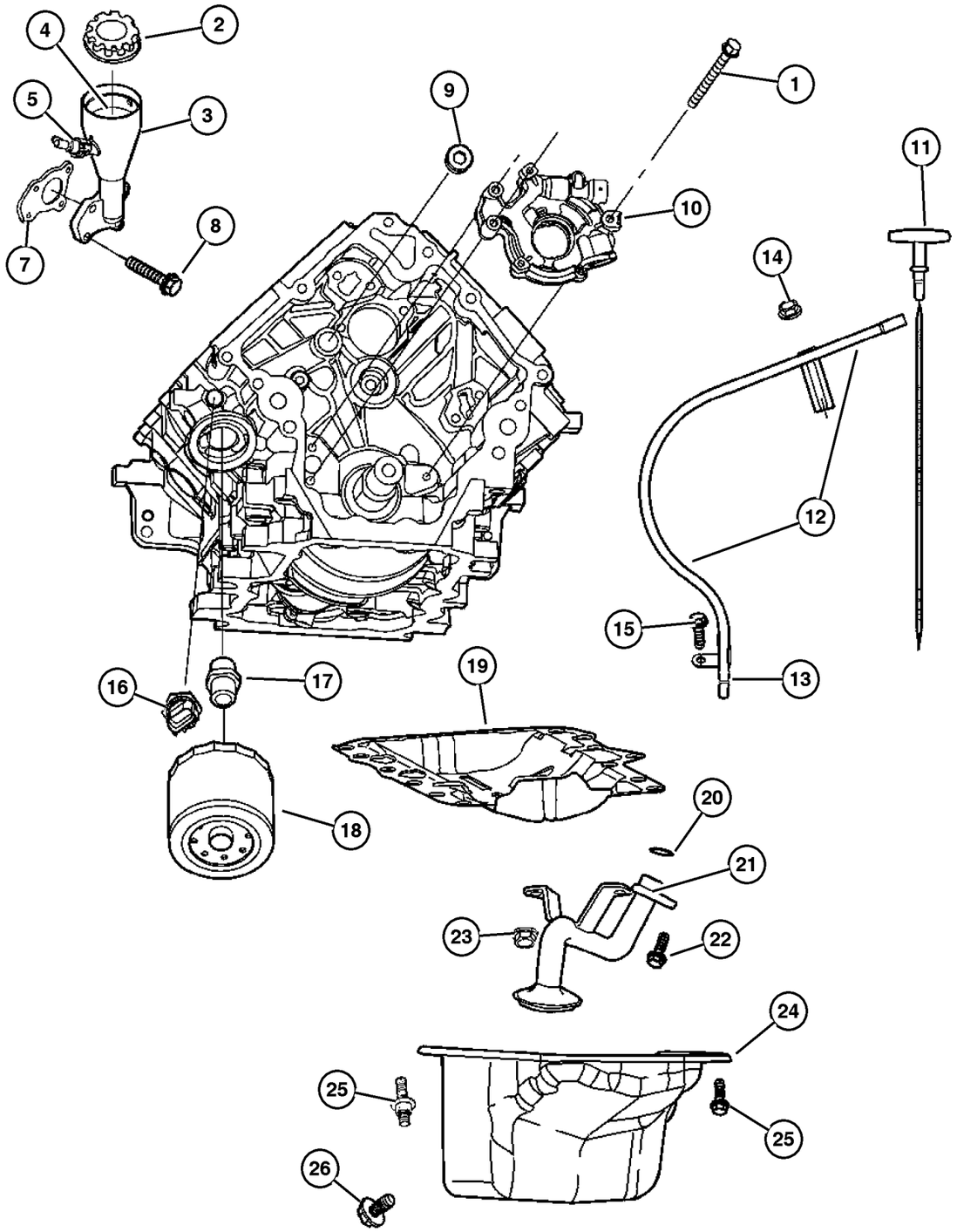

ITEM	PART NUMBER	QTY	LINE	SERIES	BODY	ENGINE	TRANS	TRIM	DESCRIPTION
NOTE:									
Sales Codes:									
[DBB]=All Manual Transmissions									
[DEH]=6-Speed Manual NSG370 Transmission									
[DGQ]=5-Speed Automatic 5-45RFE Transmission									
[DGV]=4-Speed Automatic VLP Transmission									
[DG0]=All Automatic Transmissions									
[DG6]=4-Speed Automatic 42RLE Transmission									
[DHE]=Command-Trac H.D. Part Time NVG 241 GII Transfer Case									
[DHN]=Command-Trac Part Time NVG 231 Transfer Case									
[DHP]=Selec-Trac Full Time NVG 242 Transfer Case									
[EKG]=3.7L ‘‘Magnum‘‘ V-6 Engine									
[EK0]=All 3.7L 6-Cylinder Gas Engines									
[ENR]=2.8L 4-Cylinder Turbo Diesel Engine									
[EN0]=All 4/5 Cylinder Diesel Engines									
[NAA]=Federal Emissions									
[NAE]=California Emissions									
[NAS]=50 States Emissions									
[NA1]=Export Emissons									
1	6100 932	1				EK0			BOLT, Hex, M8X1.25X60.00, Oil Pump Mounting
2	53032 389AD	1				EK0			CAP, Oil Filler
3	5302 0890	1				EK0			HOUSING, Oil Fill
4	53032 126AA	1				EK0			BAFFLE, Oil Fill, None
5	53032 800AA	1				EK0			VALVE, Crankcase Vent
-6	53031 711AA-	1				EK0			O RING
7	53020 889AC	1				EK0			GASKET, Oil Fill Housing
8	6505 504AA	3				EK0			SCREW, M6X1.00X27.00, Housing To Cylinder Block, Mounting
9	6036 114AA	4				EK0			PLUG, Pipe, 500-14X.560
10	53020 827AB	1				EK0			PUMP, Engine Oil
11	53021 026AH	1				EK0			INDICATOR, Engine Oil Level
12	53021 274AF	1				EK0			TUBE, Oil Gauge
13	53021 144AA	1				EK0			O RING, Engine Oil Indicator
14	6102 050AA	1				EK0			SCREW, Hex Flange Head, M6.3 x 1.81 x 15.00, Oil Level Indicator Tube To Block, Mounting
15	6504 810AA	1				EK0			SCREW AND WASHER, Hex, M6X1.00X20.00, Oil Level Indictor Tube To Block, Mounting
16	4868 672AA	1				EK0			SWITCH, Oil Pressure
17	5300 7563	1				EK0			CONNECTOR, Oil Filter

2006 Liberty (KJ)

SERIES	LINE	BODY	ENGINE	TRANSMISSION
H =HIGHLINE	T =JEEP - 2WD	74 =SPORT UTILITY 4-DR	EKG=3.7L V6 Eng.	DG6=4-Spd. Auto. 42RLE Trans.
M =MEDIUM	J =JEEP - 4WD		ENR=2.8L 4 Cyl Turbo Diesel Eng.	DGV=4-Spd. Auto. VLP Trans.
P =PREMIUM	U =JEEP - 4WD (RHD)		ENJ=2.5L 4 Cyl 16V Turbo Diesel Eng.	DGQ=5-Spd Auto. 5-45RFE Trans.
			ED1=2.4L 4 Cyl DOHC 16v SMPI Eng.	DEH=6-Speed Man. NSG370 Trans.
				DDD=5-Speed HD Man. Trans.
				DDK=5-Speed HD Man. Trans.

Engine Oiling, 3.7L [EKG]
Figure 3.7L-705

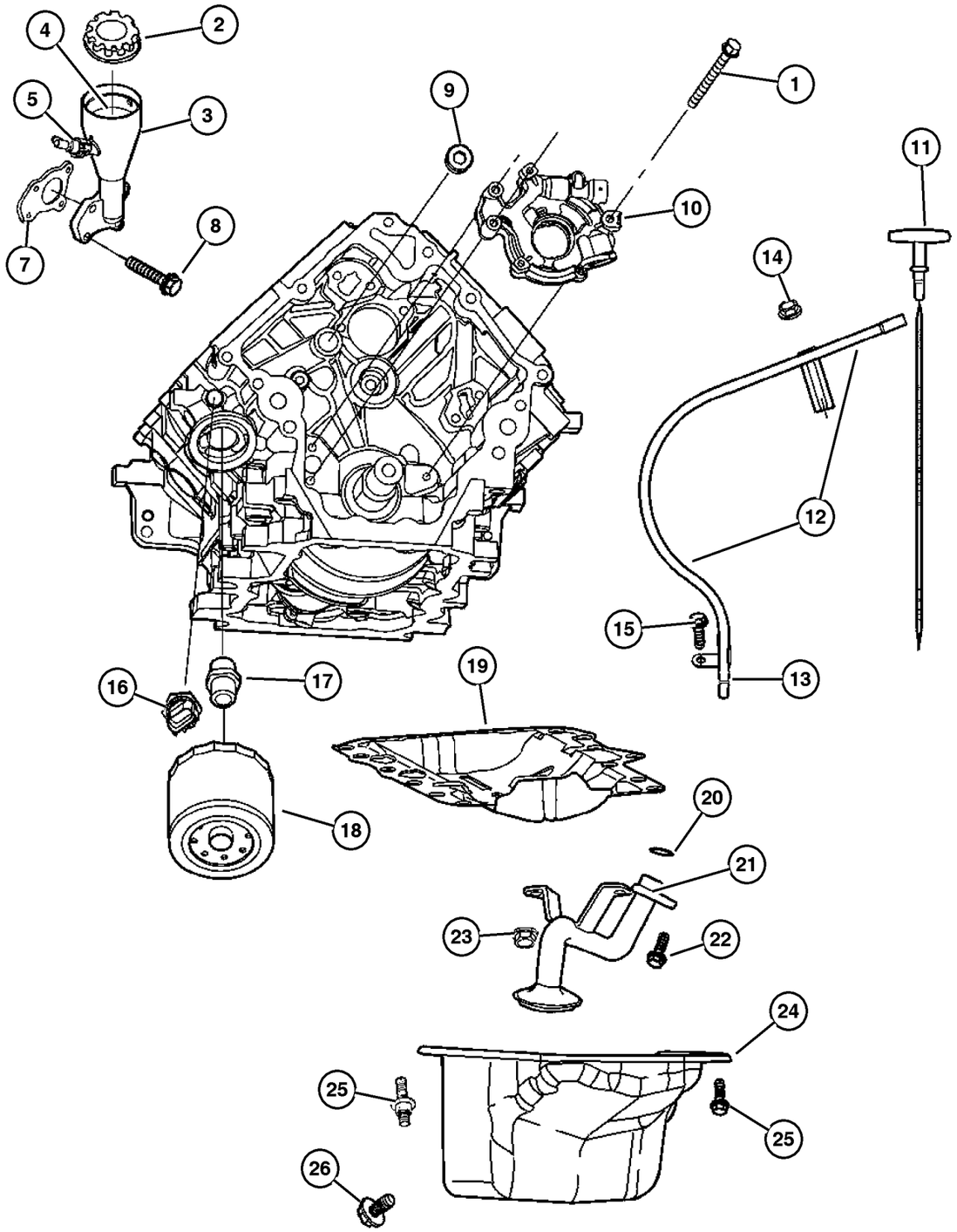

ITEM	PART NUMBER	QTY	LINE	SERIES	BODY	ENGINE	TRANS	TRIM	DESCRIPTION
18	4781 452BB	1				EK0			FILTER, Engine Oil
19	53021 001AB	1				EK0			GASKET, Oil Pan
20	5302 0861	1				EK0			SEAL, Oil Pick Up Tube
21	53021 776AA	1				EK0			TUBE, Oil Pickup
22	6102 046AA	1				EK0			SCREW AND WASHER, M8X1.25X27.00, Oil Pick Up Tube To Engine, Mounting
23	6502 756	2				EK0			NUT, Hex Lock, M8x1.25, Oil Pick Up Tube To Engine, Mounting
24	53021 779AB	1				EK0			PAN, Engine Oil
25	6504 810AA	16				EK0			SCREW AND WASHER, Hex, M6X1.00X20.00, Oil Pan To Block, Mounting
26	6506 100AA	1				EK0			PLUG, Oil Drain, M14X1.5X20.0

2006 Liberty (KJ)

SERIES	LINE	BODY	ENGINE	TRANSMISSION
H =HIGHLINE	T =JEEP - 2WD	74 =SPORT UTILITY 4-DR	EKG=3.7L V6 Eng.	DG6=4-Spd. Auto. 42RLE Trans.
M =MEDIUM	J =JEEP - 4WD		ENR=2.8L 4 Cyl Turbo Diesel Eng.	DGV=4-Spd. Auto. VLP Trans.
P =PREMIUM	U =JEEP - 4WD (RHD)		ENJ=2.5L 4 Cyl 16V Turbo Diesel Eng.	DGQ=5-Spd Auto. 5-45RFE Trans.
			ED1=2.4L 4 Cyl DOHC 16v SMPI Eng.	DEH=6-Speed Man. NSG370 Trans.
				DDD=5-Speed HD Man. Trans.
				DDK=5-Speed HD Man. Trans.

Manifolds, Intake and Exhaust, 3.7L [EKG]
Figure 3.7L-805

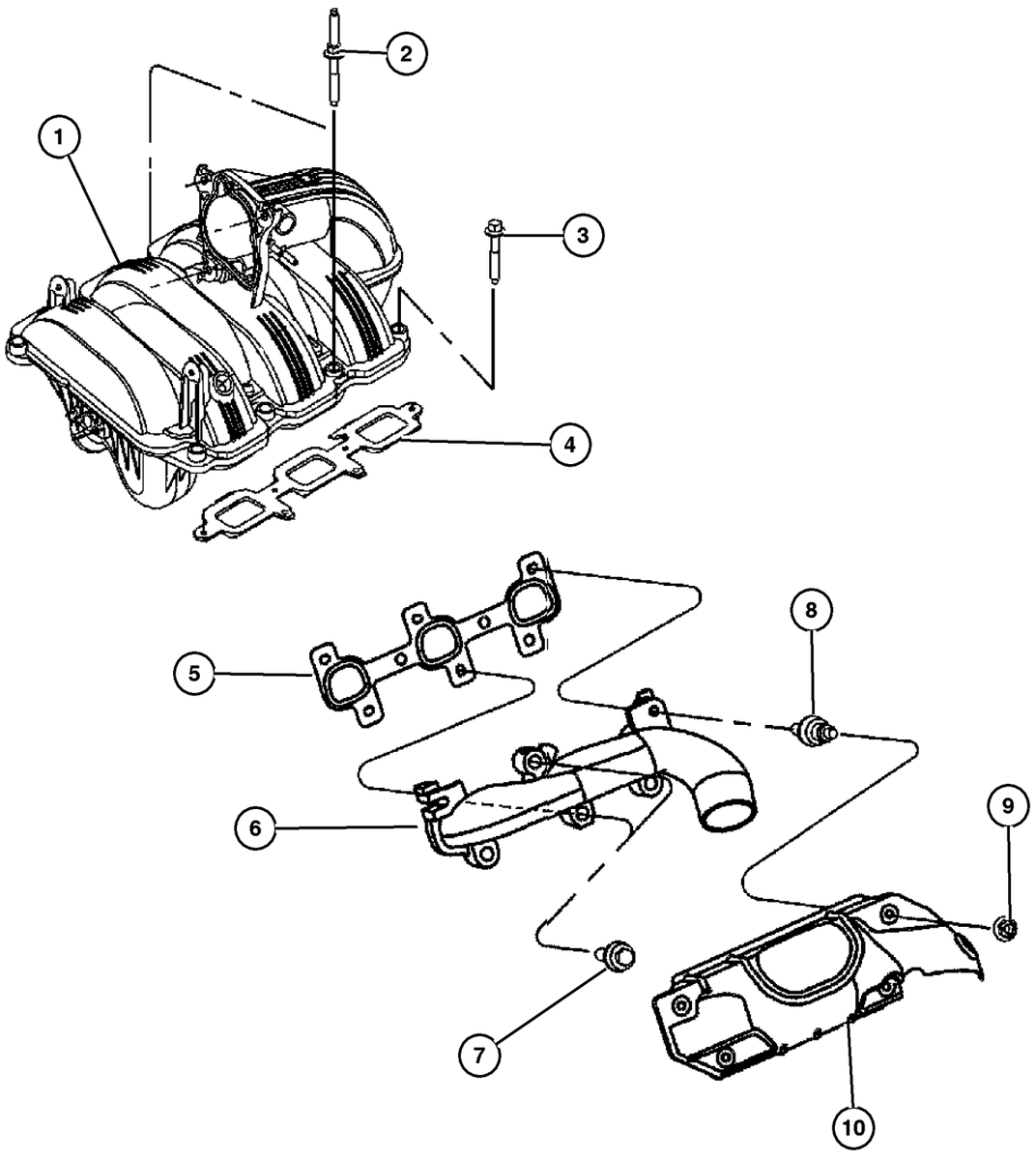

ITEM	PART NUMBER	QTY	LINE	SERIES	BODY	ENGINE	TRANS	TRIM	DESCRIPTION
NOTE:									
Sales Codes:									
[DBB]=All Manual Transmissions									
[DEH]=6-Speed Manual NSG370 Transmission									
[DGQ]=5-Speed Automatic 5-45RFE Transmission									
[DGV]=4-Speed Automatic VLP Transmission									
[DG0]=All Automatic Transmissions									
[DG6]=4-Speed Automatic 42RLE Transmission									
[DHE]=Command-Trac H.D. Part Time NVG 241 GII Transfer Case									
[DHN]=Command-Trac Part Time NVG 231 Transfer Case									
[DHP]=Selec-Trac Full Time NVG 242 Transfer Case									
[EKG]=3.7L ‘‘Magnum‘‘ V-6 Engine									
[EK0]=All 3.7L 6-Cylinder Gas Engines									
[ENR]=2.8L 4-Cylinder Turbo Diesel Engine									
[EN0]=All 4/5 Cylinder Diesel Engines									
[NAA]=Federal Emissions									
[NAE]=California Emissions									
[NAS]=50 States Emissions									
[NA1]=Export Emissons									
1	53032 803AA	1				EK0			MANIFOLD, Intake
2	6507 434AA	7				EK0			STUD, Double Ended, M6X1.00X80.00, Intake Manifold To Cylinder Head, Mounting
3	6507 433AA	1				EK0			SCREW, Hex Flange Head, M6X1.00X43.00, Intake Manifold To Cylinder Head, Mounting
4	53010 310AB	6				EK0			SEAL, Intake Manifold
5									GASKET, Exhaust Manifold
	5303 1090	1				EK0			Right
	5303 1091	1				EK0			Left
6									MANIFOLD, Exhaust
	53013 691AA	1				EK0			Left
	53013 692AA	1				EK0			Right
7	6507 746AA	4				EK0			BOLT, Exhaust Manifold, M8X1.25X46.00, Mounting
8	6508 220AA	8				EK0			STUD, Exhaust Manifold, M8X1.25/M6X1.00X86.00, Mounting
9	6505 316AA	8				EK0			NUT, M6X1.00, Mounting
10									SHIELD, Exhaust Manifold
	53031 092AC	1				EK0			Right
	53031 093AC	1				EK0			Left

2006 Liberty (KJ)

SERIES	LINE	BODY	ENGINE	TRANSMISSION
H =HIGHLINE	T =JEEP - 2WD	74 =SPORT UTILITY 4-DR	EKG=3.7L V6 Eng.	DG6=4-Spd. Auto. 42RLE Trans.
M =MEDIUM	J =JEEP - 4WD		ENR=2.8L 4 Cyl Turbo Diesel Eng.	DGV=4-Spd. Auto. VLP Trans.
P =PREMIUM	U =JEEP - 4WD (RHD)		ENJ=2.5L 4 Cyl 16V Turbo Diesel Eng.	DGQ=5-Spd Auto. 5-45RFE Trans.
			ED1=2.4L 4 Cyl DOHC 16v SMPI Eng.	DEH=6-Speed Man. NSG370 Trans.
				DDD=5-Speed HD Man. Trans.
				DDK=5-Speed HD Man. Trans.

Crankcase Ventilation 3.7L [EKG]
Figure 3.7L-905

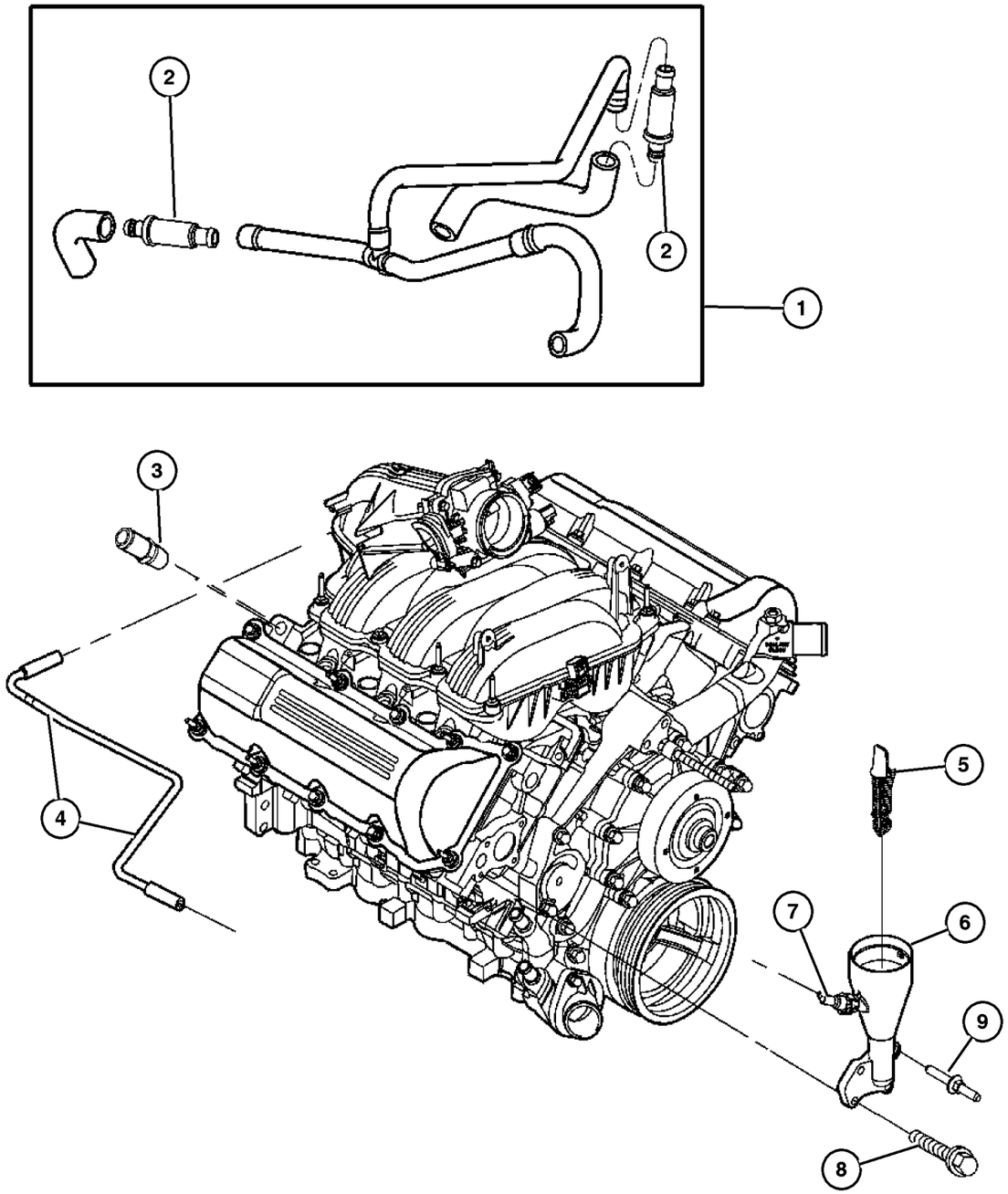

ITEM	PART NUMBER	QTY	LINE	SERIES	BODY	ENGINE	TRANS	TRIM	DESCRIPTION
NOTE:									
Sales Codes:									
[DBB]=All Manual Transmissions									
[DEH]=6-Speed Manual NSG370 Transmission									
[DGQ]=5-Speed Automatic 5-45RFE Transmission									
[DGV]=4-Speed Automatic VLP Transmission									
[DG0]=All Automatic Transmissions									
[DG6]=4-Speed Automatic 42RLE Transmission									
[DHE]=Command-Trac H.D. Part Time NVG 241 GII Transfer Case									
[DHN]=Command-Trac Part Time NVG 231 Transfer Case									
[DHP]=Selec-Trac Full Time NVG 242 Transfer Case									
[EKG]=3.7L ‘‘Magnum‘‘ V-6 Engine									
[EK0]=All 3.7L 6-Cylinder Gas Engines									
[ENR]=2.8L 4-Cylinder Turbo Diesel Engine									
[EN0]=All 4/5 Cylinder Diesel Engines									
[NAA]=Federal Emissions									
[NAE]=California Emissions									
[NAS]=50 States Emissions									
[NA1]=Export Emissons									
1	53013 723AC	1				EK0			HOSE, Cylinder Head to Air Cleaner
2									BREATHER, Crankcase, Serviced With Hose. Item 1, (NOT SERVICED) (Not Serviced)
3	6035 854	2				EK0			NIPPLE
4	53031 133AE	1				EK0			TUBE, Crankcase Vent To Intake Manifold
5	53032 126AA	1				EK0			BAFFLE, Oil Fill, None
6	5302 0890	1				EK0			HOUSING, Oil Fill
7	53032 800AA	1				EK0			VALVE, Crankcase Vent
8	6505 504AA	3				EK0			SCREW, M6X1.00X27.00, Oil Fill Housing To Cylinder Block
9	6505 566AA	1				EK0			STUD, M6X1.00X51.9, Oil Fill Housing To Cylinder Block

2006 Liberty (KJ)

SERIES	LINE	BODY	ENGINE	TRANSMISSION
H =HIGHLINE	T =JEEP - 2WD	74 =SPORT UTILITY 4-DR	EKG=3.7L V6 Eng.	DG6=4-Spd. Auto. 42RLE Trans.
M =MEDIUM	J =JEEP - 4WD		ENR=2.8L 4 Cyl Turbo Diesel Eng.	DGV=4-Spd. Auto. VLP Trans.
P =PREMIUM	U =JEEP - 4WD (RHD)		ENJ=2.5L 4 Cyl 16V Turbo Diesel Eng.	DGQ=5-Spd Auto. 5-45RFE Trans.
			ED1=2.4L 4 Cyl DOHC 16v SMPI Eng.	DEH=6-Speed Man. NSG370 Trans.
				DDD=5-Speed HD Man. Trans.
				DDK=5-Speed HD Man. Trans.

Group – 2.8L

Engine 2.8L Four Cylinder (Turbo Diesel)

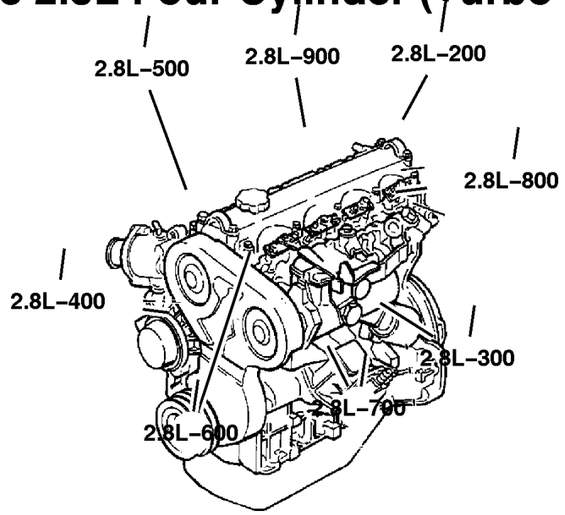

2.8L–200 Cylinder Head 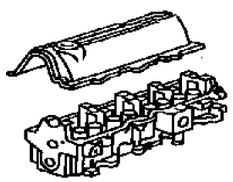	**2.8L–300** Cylinder Block 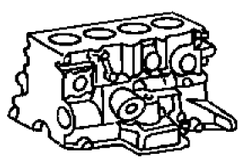	**2.8L–400** Crankshaft, Piston and Drive Plate 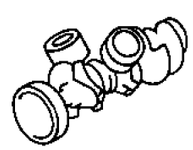	**2.8L–500** Camshafts & Valves 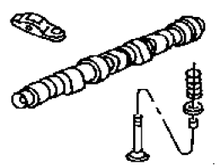
2.8L–600 Timing Belt and Cover 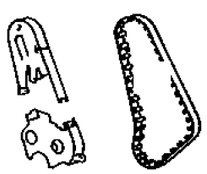	**2.8L–700** Engine Oiling 	**2.8L–800** Manifolds 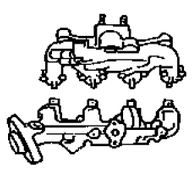	**2.8L–900** Crankcase Ventilation 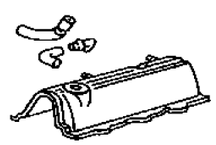

GROUP 2.8L - Engine 2.8L Four Cylinder (Turbo Diesel)

Illustration Title — Group-Fig. No.

Cylinder Head
Cylinder Head 2.8L Diesel [ENR] . . . . . Fig. 2.8L-205

Cylinder Block
Cylinder Block 2.8L Diesel [ENR] . . . . . Fig. 2.8L-305

Crankshaft, Piston and Drive Plate
Crankshaft,Pistons and Related, 2.8L Diesel [ENR] . . . . . Fig. 2.8L-405

Camshafts & Valves
Camshaft and Valves, 2.8L Diesel [ENR] . . . . . Fig. 2.8L-505

Timing Belt and Cover
Timing Cover, Belt and Gears 2.8L Diesel [ENR] . . . . . Fig. 2.8L-605

Engine Oiling
Engine Oiling 2.8L Diesel [ENR] . . . . . Fig. 2.8L-705
Oil Passages and Oil Cooler 2.8L Diesel [ENR] . . . . . Fig. 2.8L-710

Manifolds
Exhaust Manifold and Vacuum Line 2.8L Diesel [ENR] . . . . . Fig. 2.8L-805
Intake Manifold Air Lines 2.8L Diesel [ENR] . . . . . Fig. 2.8L-810

Crankcase Ventilation
Crankcase Ventilation 2.8L Diesel [ENR] . . . . . Fig. 2.8L-905

Cylinder Head 2.8L Diesel [ENR]
Figure 2.8L-205

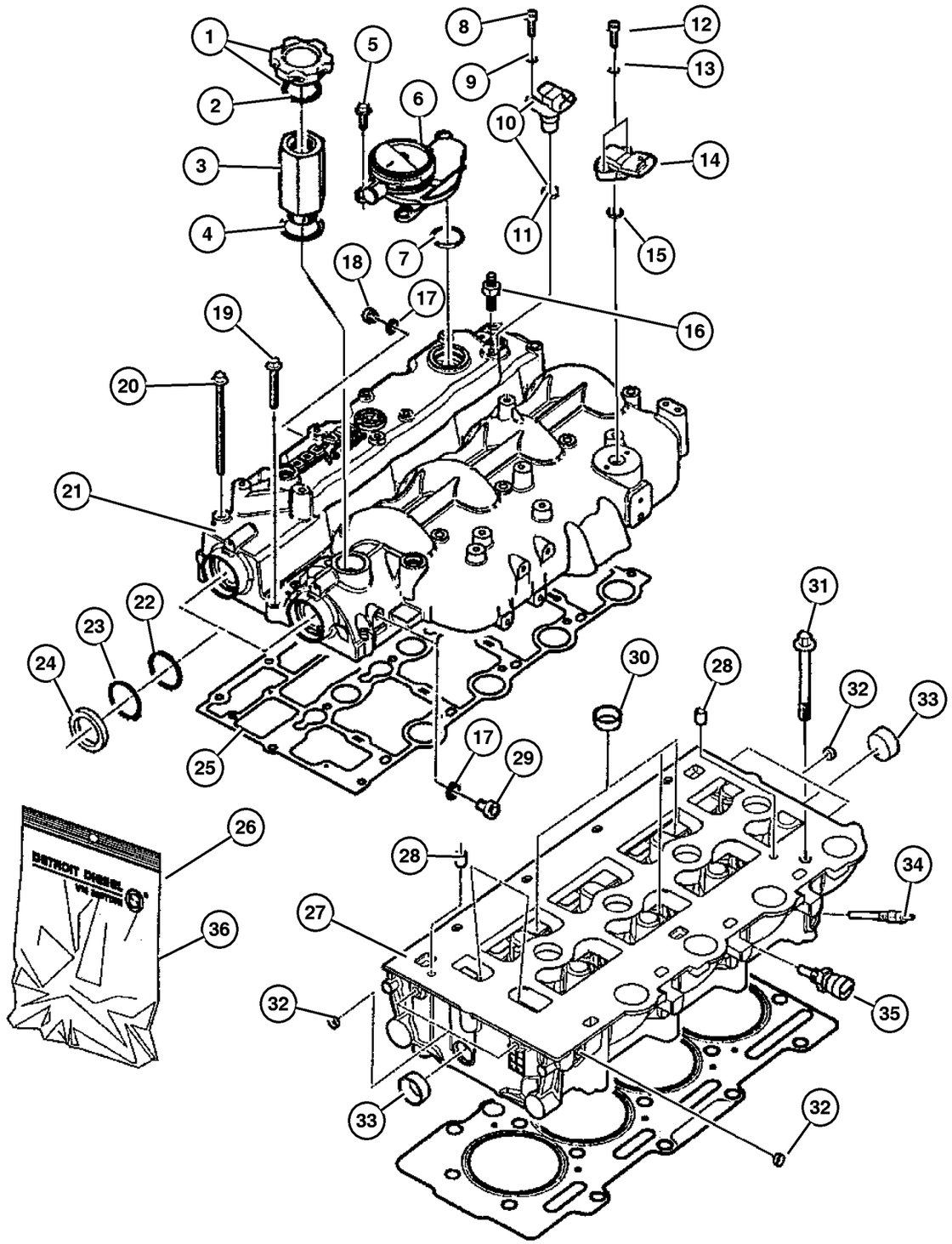

ITEM	PART NUMBER	QTY	LINE	SERIES	BODY	ENGINE	TRANS	TRIM	DESCRIPTION
NOTE:									
Sales Codes:									
[DBB]=All Manual Transmissions									
[DEH]=6-Speed Manual NSG370 Transmission									
[DGQ]=5-Speed Automatic 5-45RFE Transmission									
[DGV]=4-Speed Automatic VLP Transmission									
[DG0]=All Automatic Transmissions									
[DG6]=4-Speed Automatic 42RLE Transmission									
[DHE]=Command-Trac H.D. Part Time NVG 241 GII Transfer Case									
[DHN]=Command-Trac Part Time NVG 231 Transfer Case									
[DHP]=Selec-Trac Full Time NVG 242 Transfer Case									
[EKG]=3.7L ‘‘Magnum‘‘ V-6 Engine									
[EK0]=All 3.7L 6-Cylinder Gas Engines									
[ENR]=2.8L 4-Cylinder Turbo Diesel Engine									
[EN0]=All 4/5 Cylinder Diesel Engines									
[NAA]=Federal Emissions									
[NAE]=California Emissions									
[NAS]=50 States Emissions									
1									CAP, Oil Filler
	4863 741	1				EN0	DG0		
		1				EN0	DBB		
2									GASKET, Oil Filler Cap
	4720 300	1				EN0	DG0		
		1				EN0	DBB		
3									SPACER, Oil Filler
	5072 678AA	1				EN0	DBB		
	5170 788AA	1				EN0	DG0		
4									GASKET, Oil Filler Connector
	5066 853AA	1				EN0	DG0		
		1				EN0	DBB		
5									SCREW
	5003 553AB	6				EN0	DG0		
		6				EN0	DBB		
6									VALVE, Pressure Control
	5114 348AB	1				EN0	DG0		
		1				EN0	DBB		
7									O RING, Pressure Relief Valve
	5114 347AA	2				EN0	DG0		
		2				EN0	DBB		
8									BOLT, M6x10
	5003 551AA	1				EN0	DG0		
		1				EN0	DBB		
9									WASHER, Implement Attaching

2006 Liberty (KJ)

SERIES	LINE	BODY	ENGINE	TRANSMISSION
H =HIGHLINE	T =JEEP - 2WD	74 =SPORT UTILITY 4-DR	EKG=3.7L V6 Eng.	DG6=4-Spd. Auto. 42RLE Trans.
M =MEDIUM	J =JEEP - 4WD		ENR=2.8L 4 Cyl Turbo Diesel Eng.	DGV=4-Spd. Auto. VLP Trans.
P =PREMIUM	U =JEEP - 4WD (RHD)		ENJ=2.5L 4 Cyl 16V Turbo Diesel Eng.	DGQ=5-Spd Auto. 5-45RFE Trans.
			ED1=2.4L 4 Cyl DOHC 16v SMPI Eng.	DEH=6-Speed Man. NSG370 Trans.
				DDD=5-Speed HD Man. Trans.
				DDK=5-Speed HD Man. Trans.

Cylinder Head 2.8L Diesel [ENR]
Figure 2.8L-205

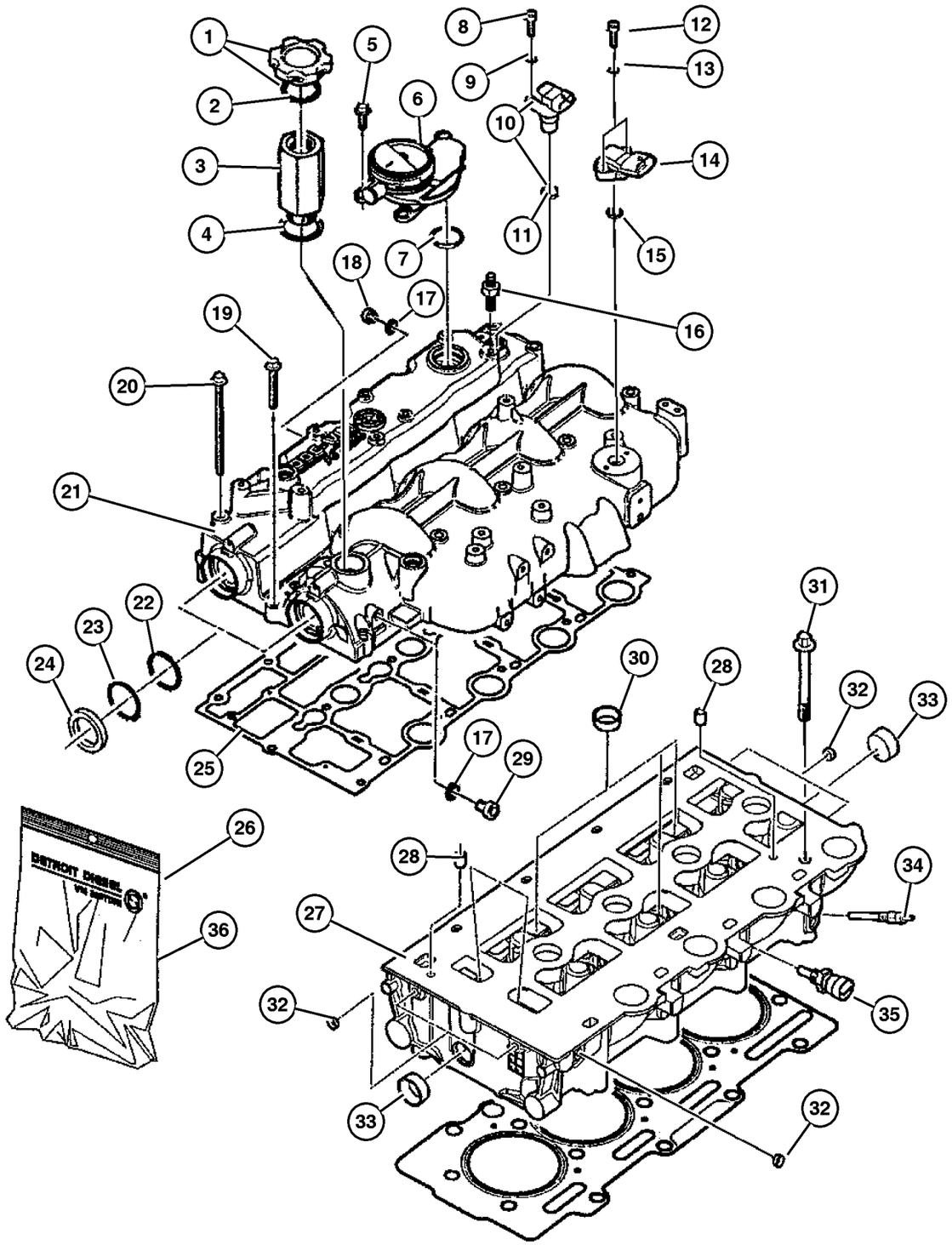

ITEM	PART NUMBER	QTY	LINE	SERIES	BODY	ENGINE	TRANS	TRIM	DESCRIPTION
	4723 204	1				EN0	DG0		
		1				EN0	DBB		
10									SENSOR, Camshaft
	5140 332AA	1				EN0	DG0		
		1				EN0	DBB		
11									O RING
	5066 860AA	1				EN0	DBB		
		1				EN0	DG0		
12									SCREW
	5010 858AA	1				EN0	DG0		
		1				EN0	DBB		
13									WASHER, Fuel Solenoid Wire
	4723 168	1				EN0	DG0		
		1				EN0	DBB		
14									SENSOR, Air Temperature
	5140 331AA	1				EN0	DG0		
		1				EN0	DBB		
15									O RING, (NOT REQUIRED)
16	5142 745AA	3				EN0	DG0		STUD, Intake Manifold
17									WASHER, Implement Attaching
	4720 713	1				EN0	DG0		
		1				EN0	DBB		
18									PLUG, Cylinder Block
	5066 787AA	2				EN0	DG0		
		2				EN0	DBB		
19									SCREW
	5066 960AB	6				EN0	DG0		
		6				EN0	DBB		
20	5066 959AB	10				EN0	DG0		BOLT
21									COVER, Cylinder Head
	5093 897AB	1				EN0	DG0		
		1				EN0	DBB		
22									SPACER
	5066 844AA	2				EN0	DG0		
		2				EN0	DBB		
23									SNAP RING
	5066 841AA	2				EN0	DG0		
		2				EN0	DBB		
24									SEAL
	5066 958AA	2				EN0	DG0		
		2				EN0	DBB		
25									GASKET, Valve Cover

2006 Liberty (KJ)

SERIES	LINE	BODY	ENGINE	TRANSMISSION
H =HIGHLINE	T =JEEP - 2WD	74 =SPORT UTILITY 4-DR	EKG=3.7L V6 Eng.	DG6=4-Spd. Auto. 42RLE Trans.
M =MEDIUM	J =JEEP - 4WD		ENR=2.8L 4 Cyl Turbo Diesel Eng.	DGV=4-Spd. Auto. VLP Trans.
P =PREMIUM	U =JEEP - 4WD (RHD)		ENJ=2.5L 4 Cyl 16V Turbo Diesel Eng.	DGQ=5-Spd Auto. 5-45RFE Trans.
			ED1=2.4L 4 Cyl DOHC 16v SMPI Eng.	DEH=6-Speed Man. NSG370 Trans.
				DDD=5-Speed HD Man. Trans.
				DDK=5-Speed HD Man. Trans.

AR = Use as required - = Non illustrated part # = New this model year

Cylinder Head 2.8L Diesel [ENR]
Figure 2.8L-205

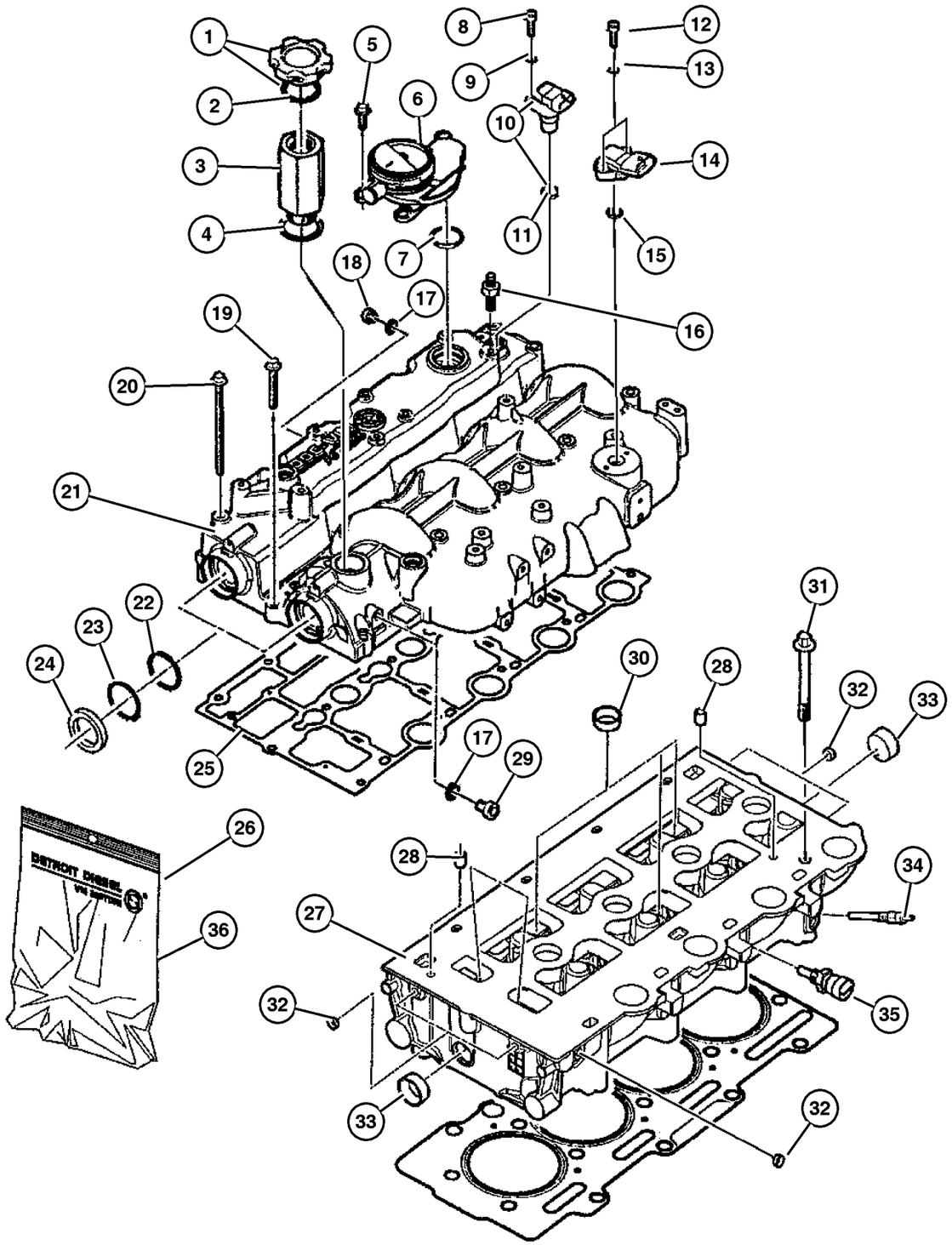

ITEM	PART NUMBER	QTY	LINE	SERIES	BODY	ENGINE	TRANS	TRIM	DESCRIPTION
	5066 786AA	1				EN0	DG0		
		1				EN0	DBB		
26									GASKET KIT, Engine
	5143 080AB	1				EN0	DG0		
		1				EN0	DBB		
27									HEAD, Cylinder
	5159 955AB	1				EN0	DG0		
		1				EN0	DBB		
28									DOWEL, Rocker
	4720 165	3				EN0	DG0		
		3				EN0	DBB		
29									PLUG, Cylinder Block
	5066 787AA	2				EN0	DG0		
		2				EN0	DBB		
30									PLUG, Cylinder Block Oil Hole
	4723 211	5				EN0	DG0		
		5				EN0	DBB		
31									BOLT, Cylinder Head
	5066 957AC	18				EN0	DG0		
		18				EN0	DBB		
32									PLUG, Cylinder Block
	5066 837AA	5				EN0	DG0		
		5				EN0	DBB		
33									PLUG, Cylinder Block
	5066 836AA	2				EN0	DG0		
		2				EN0	DBB		
34									PLUG, Glow
	5142 577AA	4				EN0	DG0		
		4				EN0	DBB		
35									SENSOR, Temperature Sending Unit
	5066 779AA	1				EN0	DG0		
		1				EN0	DBB		
36									GASKET KIT, Head
	5166 481AA	1				EN0	DG0		1.32 MM Thickness
		1				EN0	DBB		1.32 MM Thickness
	5166 482AA	1				EN0	DG0		1.42 MM Thickness
		1				EN0	DBB		1.42 MM Thickness
	5166 483AA	1				EN0	DG0		1.52 MM Thickness
		1				EN0	DBB		1.52 MM Thickness
-37	53013 813AB-	1				EN0			COVER, Engine

2006 Liberty (KJ)

SERIES	LINE	BODY	ENGINE	TRANSMISSION
H =HIGHLINE	T =JEEP - 2WD	74 =SPORT UTILITY 4-DR	EKG=3.7L V6 Eng.	DG6=4-Spd. Auto. 42RLE Trans.
M =MEDIUM	J =JEEP - 4WD		ENR=2.8L 4 Cyl Turbo Diesel Eng.	DGV=4-Spd. Auto. VLP Trans.
P =PREMIUM	U =JEEP - 4WD (RHD)		ENJ=2.5L 4 Cyl 16V Turbo Diesel Eng.	DGQ=5-Spd Auto. 5-45RFE Trans.
			ED1=2.4L 4 Cyl DOHC 16v SMPI Eng.	DEH=6-Speed Man. NSG370 Trans.
				DDD=5-Speed HD Man. Trans.
				DDK=5-Speed HD Man. Trans.

AR = Use as required - = Non illustrated part # = New this model year

Cylinder Block 2.8L Diesel [ENR]
Figure 2.8L-305

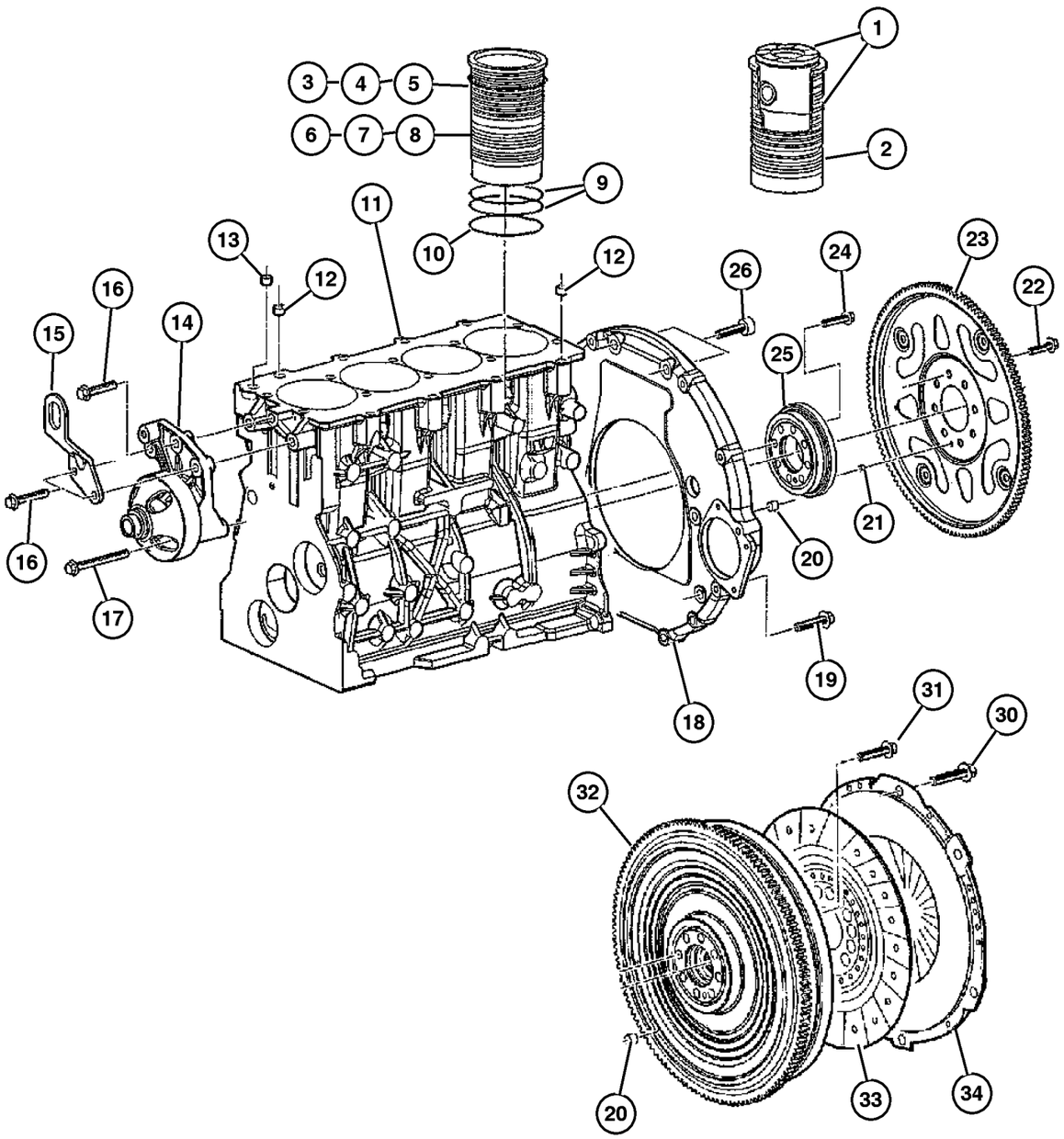

ITEM	PART NUMBER	QTY	LINE	SERIES	BODY	ENGINE	TRANS	TRIM	DESCRIPTION
NOTE:									
Sales Codes:									
[DBB]=All Manual Transmissions									
[DEH]=6-Speed Manual NSG370 Transmission									
[DGQ]=5-Speed Automatic 5-45RFE Transmission									
[DGV]=4-Speed Automatic VLP Transmission									
[DG0]=All Automatic Transmissions									
[DG6]=4-Speed Automatic 42RLE Transmission									
[DHE]=Command-Trac H.D. Part Time NVG 241 GII Transfer Case									
[DHN]=Command-Trac Part Time NVG 231 Transfer Case									
[DHP]=Selec-Trac Full Time NVG 242 Transfer Case									
[EKG]=3.7L ‘‘Magnum‘‘ V-6 Engine									
[EK0]=All 3.7L 6-Cylinder Gas Engines									
[ENR]=2.8L 4-Cylinder Turbo Diesel Engine									
[EN0]=All 4/5 Cylinder Diesel Engines									
[NAA]=Federal Emissions									
[NAE]=California Emissions									
[NAS]=50 States Emissions									
1									LINER AND PISTON, Cylinder
	5142 785AA	4				EN0	DG0		
		4				EN0	DBB		
2									LINER, Cylinder
	5103 155AA	4				EN0	DG0		
		4				EN0	DBB		
3									SHIM, Cylinder Liner, 0.15mm
	4720 620	4				EN0	DG0		
		4				EN0	DBB		
4									SHIM KIT, Cylinder Liner
	5103 154AA	4				EN0	DG0		
		4				EN0	DBB		
5									SHIM, Cylinder Liner, 0.17mm
	4720 624	4				EN0	DG0		
		4				EN0	DBB		
6									SHIM, Cylinder Liner, 0.20mm
	4720 621	4				EN0	DG0		
		4				EN0	DBB		
7									SHIM, Cylinder Liner, 0.23mm
	4720 623	4				EN0	DG0		
		4				EN0	DBB		
8									SHIM, Cylinder Liner, 0.25mm
	4720 622	4				EN0	DG0		
		4				EN0	DBB		
9									O RING, Cylinder Liner

2006 Liberty (KJ)

SERIES	LINE	BODY	ENGINE	TRANSMISSION
H =HIGHLINE	T =JEEP - 2WD	74 =SPORT UTILITY 4-DR	EKG=3.7L V6 Eng.	DG6=4-Spd. Auto. 42RLE Trans.
M =MEDIUM	J =JEEP - 4WD		ENR=2.8L 4 Cyl Turbo Diesel Eng.	DGV=4-Spd. Auto. VLP Trans.
P =PREMIUM	U =JEEP - 4WD (RHD)		ENJ=2.5L 4 Cyl 16V Turbo Diesel Eng.	DGQ=5-Spd Auto. 5-45RFE Trans.
			ED1=2.4L 4 Cyl DOHC 16v SMPI Eng.	DEH=6-Speed Man. NSG370 Trans.
				DDD=5-Speed HD Man. Trans.
				DDK=5-Speed HD Man. Trans.

Cylinder Block 2.8L Diesel [ENR]
Figure 2.8L-305

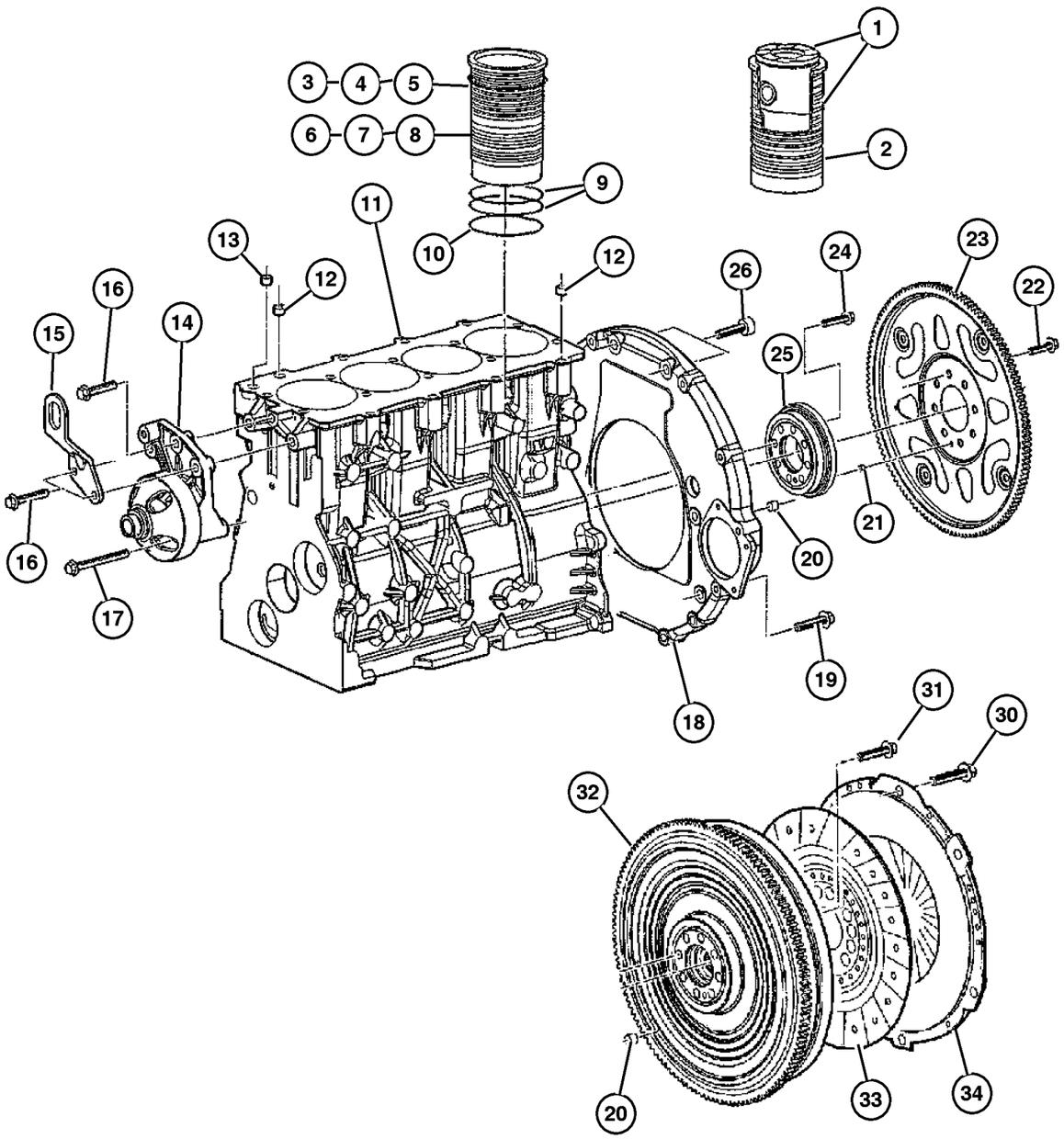

ITEM	PART NUMBER	QTY	LINE	SERIES	BODY	ENGINE	TRANS	TRIM	DESCRIPTION
	5093 955AA	8				EN0	DG0		
		8				EN0	DBB		
10									O RING, Cylinder Liner
	4720 626	4				EN0	DG0		
		4				EN0	DBB		
11									ENGINE, 3/4 Tested, Diesel
	5170 766AA	1				EN0	DBB		
		1				EN0	DG0		
12									DOWEL, Transmission Adapter
	4720 237	2				EN0	DG0		
		2				EN0	DBB		
13									DOWEL, Rocker
	4720 165	3				EN0	DG0		
		3				EN0	DBB		
14									BRACKET, Fan
	5142 661AB	1				EN0	DG0		
		1				EN0	DBB		
15									BRACKET, Engine Lift
	5072 754AA	1				EN0	DG0		
		1				EN0	DBB		
16									BOLT, M10x45
	5003 533AB	4				EN0	DG0		
		4				EN0	DBB		
17									BOLT, Hex Flange Head
	5015 067AB	1				EN0	DG0		
		1				EN0	DBB		
18									HOUSING, Flywheel
	5142 545AA	1				EN0	DG0		
		1				EN0	DBB		
19									BOLT, Adaptor Plate
	5003 532AB	10				EN0	DG0		
		10				EN0	DBB		
20									DOWEL, Transmission Adapter
	5015 045AA	4				EN0	DG0		
		4				EN0	DBB		
21									DOWEL, Transmission
	5093 959AA	1				EN0	DG0		
		1				EN0	DBB		
22									BOLT, Flexplate
	5014 969AA	8				EN0	DG0		
		8				EN0	DBB		
23	52104 369AA	1				EN0	DG0		PLATE, Torque Converter Drive

2006 Liberty (KJ)

SERIES	LINE	BODY	ENGINE	TRANSMISSION
H =HIGHLINE	T =JEEP - 2WD	74 =SPORT UTILITY 4-DR	EKG=3.7L V6 Eng.	DG6=4-Spd. Auto. 42RLE Trans.
M =MEDIUM	J =JEEP - 4WD		ENR=2.8L 4 Cyl Turbo Diesel Eng.	DGV=4-Spd. Auto. VLP Trans.
P =PREMIUM	U =JEEP - 4WD (RHD)		ENJ=2.5L 4 Cyl 16V Turbo Diesel Eng.	DGQ=5-Spd Auto. 5-45RFE Trans.
			ED1=2.4L 4 Cyl DOHC 16v SMPI Eng.	DEH=6-Speed Man. NSG370 Trans.
				DDD=5-Speed HD Man. Trans.
				DDK=5-Speed HD Man. Trans.

Cylinder Block 2.8L Diesel [ENR]
Figure 2.8L-305

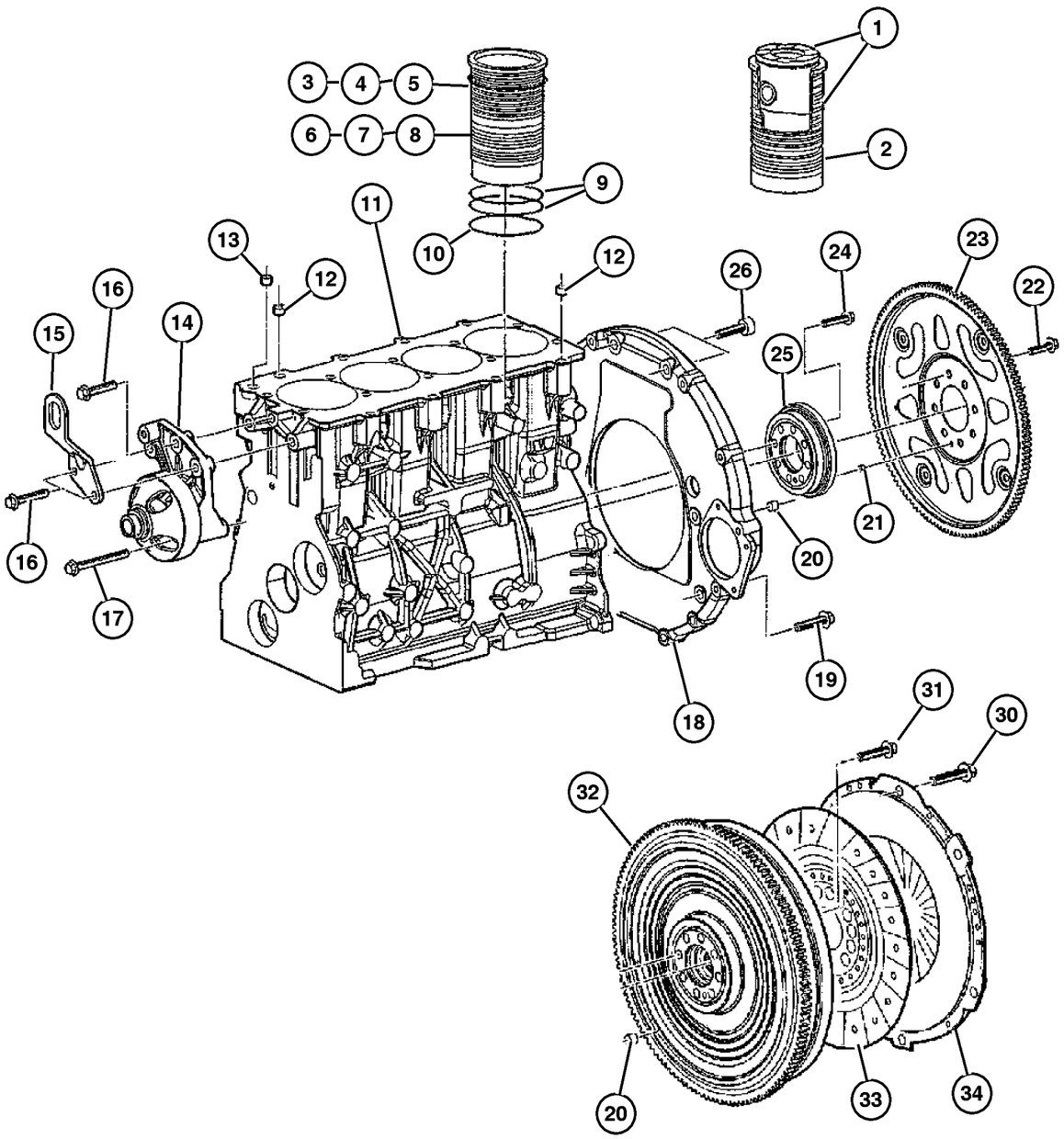

ITEM	PART NUMBER	QTY	LINE	SERIES	BODY	ENGINE	TRANS	TRIM	DESCRIPTION
24	5066 753AA	8				EN0	DG0		BOLT, Flywheel
25	5093 956AA	1				EN0	DG0		HUB
26									BOLT
	4864 757	2				EN0	DG0		
		2				EN0	DBB		
-27									JET, Valve Body, Engine Block
	5143 079AA-	1				EN0	DG0		
		1				EN0	DBB		
-28	5175 969AA-	1	J, U			EN0	DGQ		CONVERTER PACKAGE, Torque
-29	5093 909AA-	1				EN0	DG0		PLUG
30	5072 396AA	6				EN0	DBB		BOLT
31	5072 664AA	8				EN0	DBB		BOLT
32	52104 420AE	1				EN0	DBB		FLYWHEEL
33									DISC, Clutch, Serviced with Pressure Plate, (NOT SERVICED) (Not Serviced)
34	52104 302AK	1				EN0	DBB		PLATE, Pressure, Includes Clutch Disc

2006 Liberty (KJ)

SERIES	LINE	BODY	ENGINE	TRANSMISSION
H =HIGHLINE	T =JEEP - 2WD	74 =SPORT UTILITY 4-DR	EKG=3.7L V6 Eng.	DG6=4-Spd. Auto. 42RLE Trans.
M =MEDIUM	J =JEEP - 4WD		ENR=2.8L 4 Cyl Turbo Diesel Eng.	DGV=4-Spd. Auto. VLP Trans.
P =PREMIUM	U =JEEP - 4WD (RHD)		ENJ=2.5L 4 Cyl 16V Turbo Diesel Eng.	DGQ=5-Spd Auto. 5-45RFE Trans.
			ED1=2.4L 4 Cyl DOHC 16v SMPI Eng.	DEH=6-Speed Man. NSG370 Trans.
				DDD=5-Speed HD Man. Trans.
				DDK=5-Speed HD Man. Trans.

Crankshaft,Pistons and Related, 2.8L Diesel [ENR]
Figure 2.8L-405

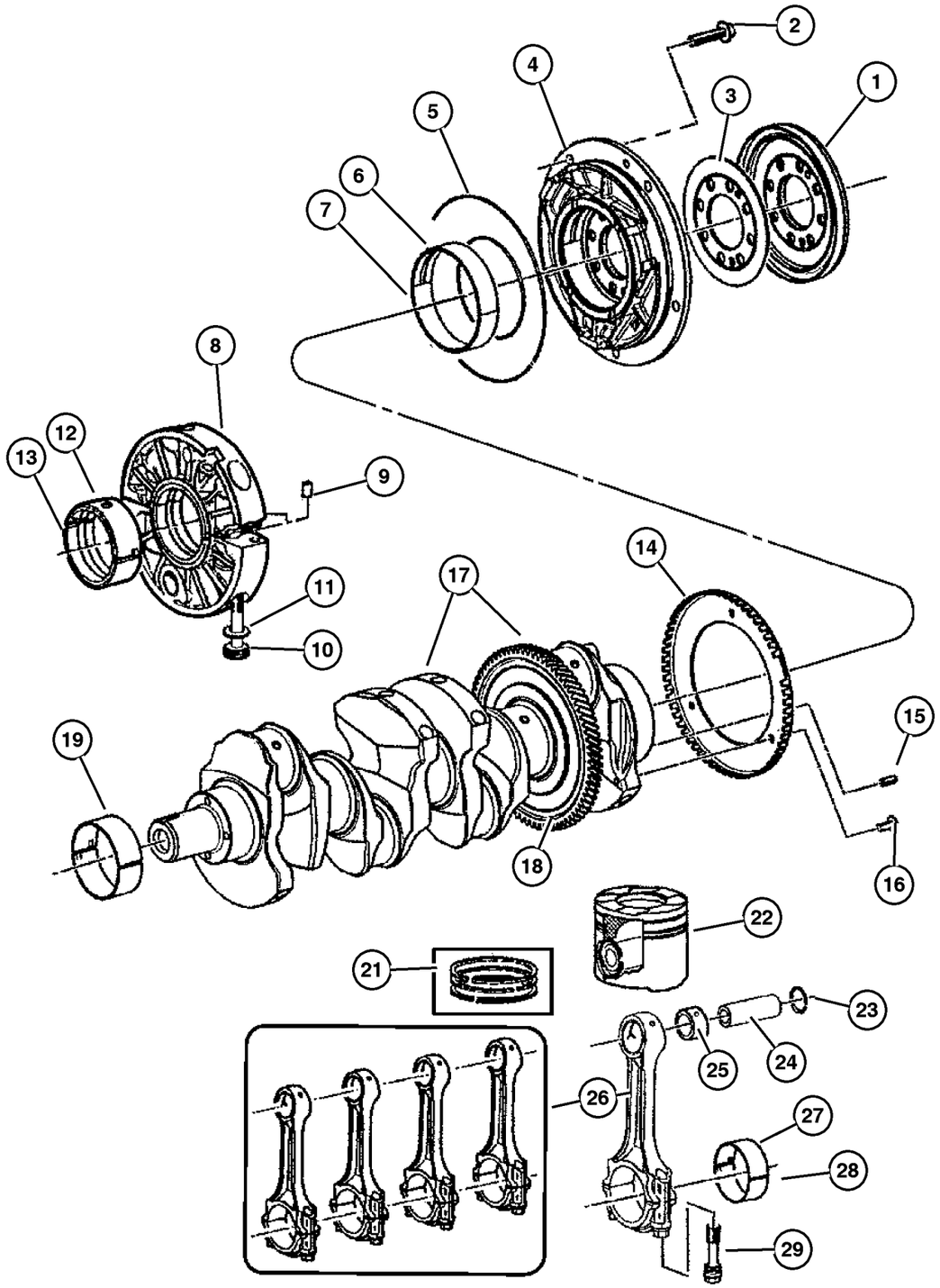

ITEM	PART NUMBER	QTY	LINE	SERIES	BODY	ENGINE	TRANS	TRIM	DESCRIPTION
NOTE:									
Sales Codes:									
[DBB]=All Manual Transmissions									
[DEH]=6-Speed Manual NSG370 Transmission									
[DGQ]=5-Speed Automatic 5-45RFE Transmission									
[DGV]=4-Speed Automatic VLP Transmission									
[DG0]=All Automatic Transmissions									
[DG6]=4-Speed Automatic 42RLE Transmission									
[DHE]=Command-Trac H.D. Part Time NVG 241 GII Transfer Case									
[DHN]=Command-Trac Part Time NVG 231 Transfer Case									
[DHP]=Selec-Trac Full Time NVG 242 Transfer Case									
[EKG]=3.7L ‘‘Magnum‘‘ V-6 Engine									
[EK0]=All 3.7L 6-Cylinder Gas Engines									
[ENR]=2.8L 4-Cylinder Turbo Diesel Engine									
[EN0]=All 4/5 Cylinder Diesel Engines									
[NAA]=Federal Emissions									
[NAE]=California Emissions									
[NAS]=50 States Emissions									
1									SEAL, Crankshaft Oil, Rear
	5066 756AA	1				EN0	DG0		
		1				EN0	DBB		
2									SCREW
	5066 986AA	11				EN0	DG0		
		11				EN0	DBB		
3									WASHER, Thrust
	5093 882AA	1				EN0	DG0		
		1				EN0	DBB		
4									HOUSING, Rear Bearing
	5101 924AB	1				EN0	DBB		
	5101 924AC	1				EN0	DG0		
5									O RING, Crankshaft Rear Support
	4720 277AA	1				EN0	DG0		
		1				EN0	DBB		
6									BEARING, Crankshaft
	5066 761AA	1				EN0	DG0		
		1				EN0	DBB		
7									BEARING, Crankshaft
	5066 762AA	1				EN0	DG0		
		1				EN0	DBB		
8									HOUSING, Crankshaft Bearing
	5066 757AB	3				EN0	DG0		
		3				EN0	DBB		
9									DOWEL, Center Bearing Housing

2006 Liberty (KJ)

SERIES	LINE	BODY	ENGINE	TRANSMISSION
H =HIGHLINE	T =JEEP - 2WD	74 =SPORT UTILITY 4-DR	EKG=3.7L V6 Eng.	DG6=4-Spd. Auto. 42RLE Trans.
M =MEDIUM	J =JEEP - 4WD		ENR=2.8L 4 Cyl Turbo Diesel Eng.	DGV=4-Spd. Auto. VLP Trans.
P =PREMIUM	U =JEEP - 4WD (RHD)		ENJ=2.5L 4 Cyl 16V Turbo Diesel Eng.	DGQ=5-Spd Auto. 5-45RFE Trans.
			ED1=2.4L 4 Cyl DOHC 16v SMPI Eng.	DEH=6-Speed Man. NSG370 Trans.
				DDD=5-Speed HD Man. Trans.
				DDK=5-Speed HD Man. Trans.

Crankshaft,Pistons and Related, 2.8L Diesel [ENR]
Figure 2.8L-405

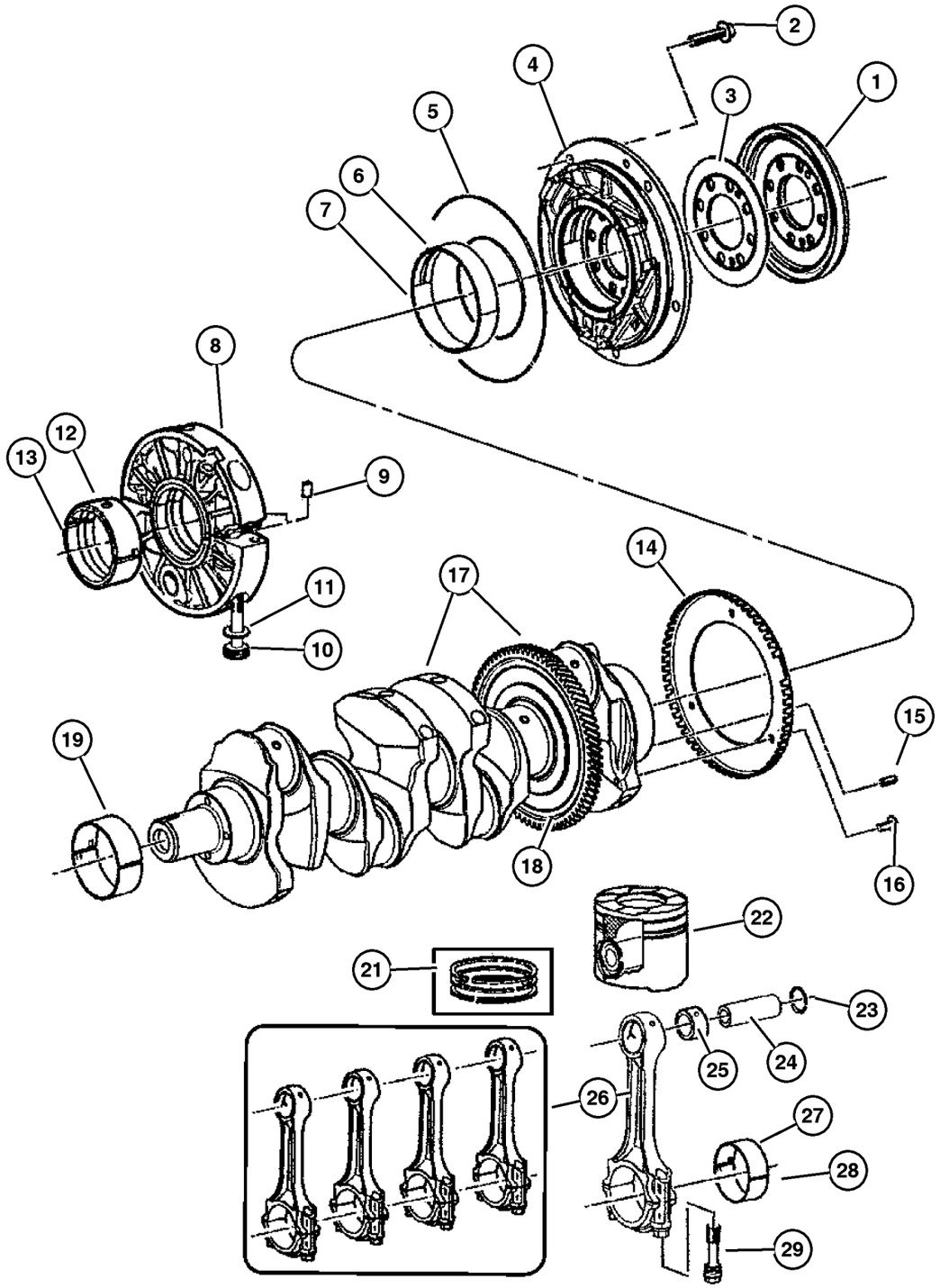

ITEM	PART NUMBER	QTY	LINE	SERIES	BODY	ENGINE	TRANS	TRIM	DESCRIPTION
	4720 241	2				EN0	DG0		
		2				EN0	DBB		
10									SCREW
	5135 263AA	2				EN0	DG0		
		2				EN0	DBB		
11									WASHER, Lock, M10, (NOT REQUIRED)
12									BEARING, Crankshaft, STD.
	5069 079AA	3				EN0	DG0		
		3				EN0	DBB		
13									BEARING, Crankshaft, .250mm U/S
	5069 080AA	3				EN0	DG0		
		3				EN0	DBB		
14									SENSOR, Crankshaft
	5066 882AA	1				EN0	DG0		
		1				EN0	DBB		
15									PIN, Spring Type
	5135 167AA	1				EN0	DG0		
		1				EN0	DBB		
16									SCREW
	5069 137AA	3				EN0	DG0		
		3				EN0	DBB		
17									CRANKSHAFT
	5093 881AB	1				EN0	DG0		
		1				EN0	DBB		
18									GEAR, Ring
	5066 977AA	1				EN0	DG0		
		1				EN0	DBB		
19	5069 077AA	1				EN0	DG0		BEARING, Crankshaft, STD.
-20									BEARING, Crankshaft, .250mm U/S
	5069 078AA-	1				EN0	DG0		
		1				EN0	DBB		
21									RING KIT, Piston
	5142 543AA	4				EN0	DG0		
		4				EN0	DBB		
22									PISTON
	5142 544AA	4				EN0	DG0		
		4				EN0	DBB		
23									RING, Piston Pin
	5140 392AA	8				EN0	DG0		
		8				EN0	DBB		
24									PIN, Piston, Serviced With Item 22, (NOT SERVICED) (Not Serviced)

2006 Liberty (KJ)

SERIES	LINE	BODY	ENGINE	TRANSMISSION
H =HIGHLINE	T =JEEP - 2WD	74 =SPORT UTILITY 4-DR	EKG=3.7L V6 Eng.	DG6=4-Spd. Auto. 42RLE Trans.
M =MEDIUM	J =JEEP - 4WD		ENR=2.8L 4 Cyl Turbo Diesel Eng.	DGV=4-Spd. Auto. VLP Trans.
P =PREMIUM	U =JEEP - 4WD (RHD)		ENJ=2.5L 4 Cyl 16V Turbo Diesel Eng.	DGQ=5-Spd Auto. 5-45RFE Trans.
			ED1=2.4L 4 Cyl DOHC 16v SMPI Eng.	DEH=6-Speed Man. NSG370 Trans.
				DDD=5-Speed HD Man. Trans.
				DDK=5-Speed HD Man. Trans.

AR = Use as required - = Non illustrated part # = New this model year

Crankshaft,Pistons and Related, 2.8L Diesel [ENR]
Figure 2.8L-405

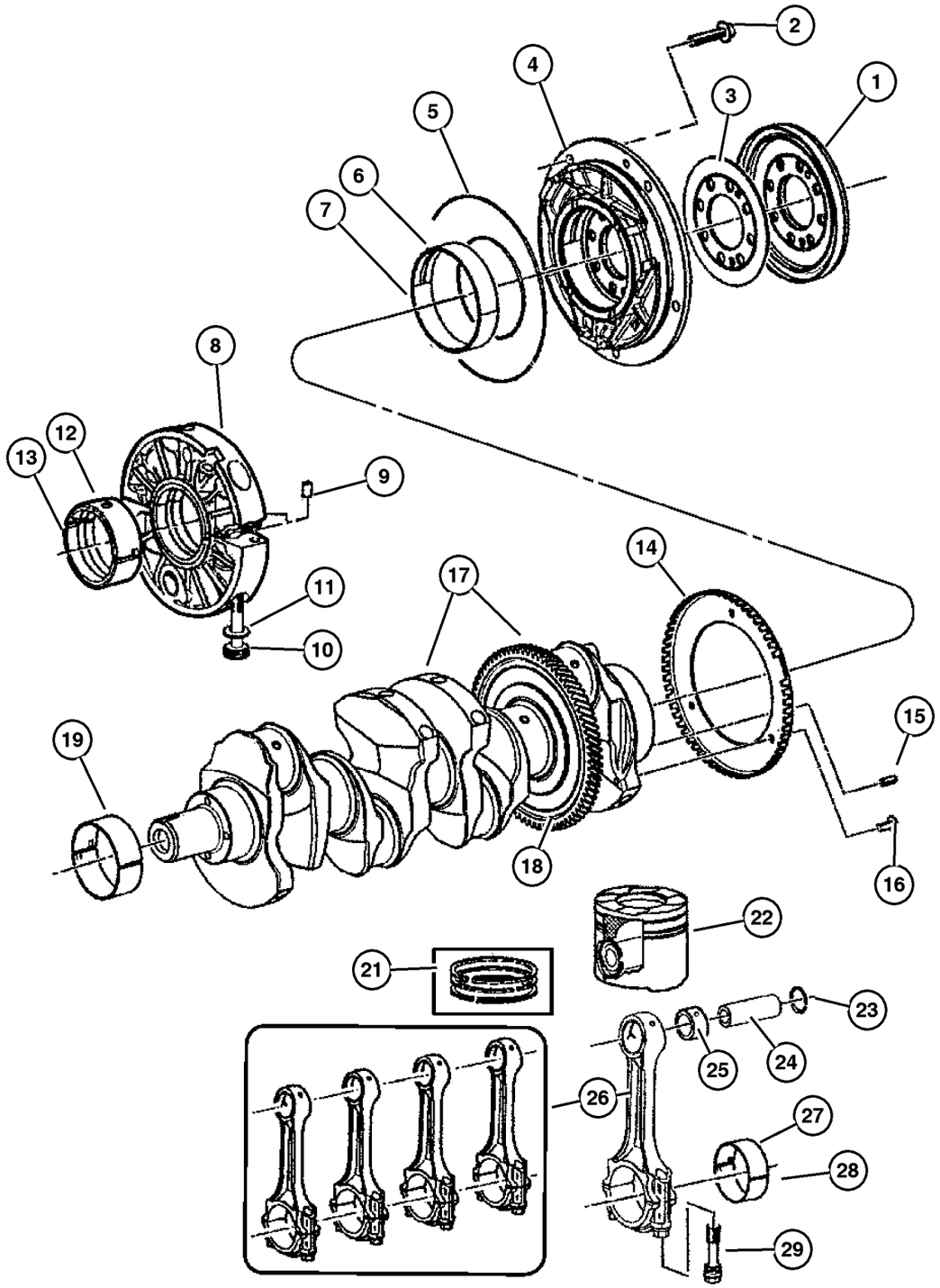

ITEM	PART NUMBER	QTY	LINE	SERIES	BODY	ENGINE	TRANS	TRIM	DESCRIPTION
25									BUSHING, Connecting Rod
	5093 887AA	4				EN0	DG0		
		4				EN0	DBB		
26									ROD, Connecting
	5093 883AA	1				EN0	DG0		
		1				EN0	DBB		
27									BEARING, Connecting Rod, STD.
	4720 877	4				EN0	DG0		
		4				EN0	DBB		
28									BEARING, Connecting Rod, .25 mm U/S
	4720 883	4				EN0	DG0		
		4				EN0	DBB		
29									BOLT, Connecting Rod
	5093 889AA	8				EN0	DG0		
		8				EN0	DBB		

2006 Liberty (KJ)

SERIES	LINE	BODY	ENGINE	TRANSMISSION
H =HIGHLINE	T =JEEP - 2WD	74 =SPORT UTILITY 4-DR	EKG=3.7L V6 Eng.	DG6=4-Spd. Auto. 42RLE Trans.
M =MEDIUM	J =JEEP - 4WD		ENR=2.8L 4 Cyl Turbo Diesel Eng.	DGV=4-Spd. Auto. VLP Trans.
P =PREMIUM	U =JEEP - 4WD (RHD)		ENJ=2.5L 4 Cyl 16V Turbo Diesel Eng.	DGQ=5-Spd Auto. 5-45RFE Trans.
			ED1=2.4L 4 Cyl DOHC 16v SMPI Eng.	DEH=6-Speed Man. NSG370 Trans.
				DDD=5-Speed HD Man. Trans.
				DDK=5-Speed HD Man. Trans.

Camshaft and Valves, 2.8L Diesel [ENR]
Figure 2.8L-505

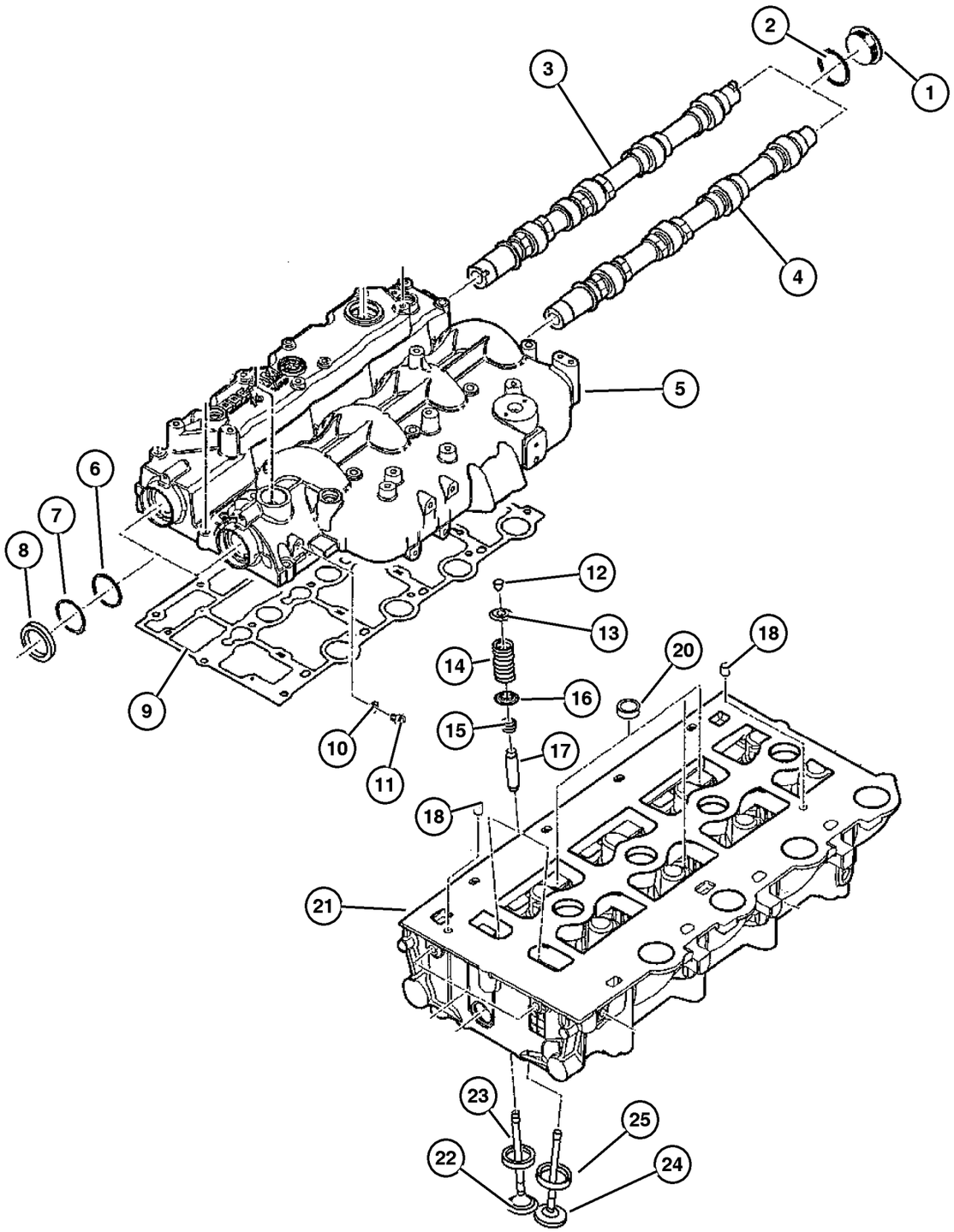

ITEM	PART NUMBER	QTY	LINE	SERIES	BODY	ENGINE	TRANS	TRIM	DESCRIPTION
NOTE: Cover Assembly Includes: Cylinder Head Cover; Camshafts with Seals, Snap Rings, Spacers and Cover Plugs with their Gaskets									
Sales Codes:									
[DBB]=All Manual Transmissions									
[DEH]=6-Speed Manual NSG370 Transmission									
[DGQ]=5-Speed Automatic 5-45RFE Transmission									
[DGV]=4-Speed Automatic VLP Transmission									
[DG0]=All Automatic Transmissions									
[DG6]=4-Speed Automatic 42RLE Transmission									
[DHE]=Command-Trac H.D. Part Time NVG 241 GII Transfer Case									
[DHN]=Command-Trac Part Time NVG 231 Transfer Case									
[DHP]=Selec-Trac Full Time NVG 242 Transfer Case									
[EKG]=3.7L ‘‘Magnum‘‘ V-6 Engine									
[EK0]=All 3.7L 6-Cylinder Gas Engines									
[ENR]=2.8L 4-Cylinder Turbo Diesel Engine									
[EN0]=All 4/5 Cylinder Diesel Engines									
[NAA]=Federal Emissions									
[NAE]=California Emissions									
[NAS]=50 States Emissions									
1									PLUG, Camshaft
	5066 855AA	2				EN0	DG0		
		2				EN0	DBB		
2									WASHER, Plain, 16.2x19.9x1.5
	5066 811AA	2				EN0	DG0		
		2				EN0	DBB		
3									CAMSHAFT, Intake
	5066 847AB	1				EN0	DG0		
		1				EN0	DBB		
4									CAMSHAFT, Exhaust
	5066 850AB	1				EN0	DG0		
		1				EN0	DBB		
5									COVER, Cylinder Head, Assembly, See Note
	5093 897AB	1				EN0	DG0		
		1				EN0	DBB		
6									SPACER
	5066 844AA	2				EN0	DG0		
		2				EN0	DBB		
7									SNAP RING
	5066 841AA	2				EN0	DG0		
		2				EN0	DBB		
8									SEAL

2006 Liberty (KJ)

SERIES	LINE	BODY	ENGINE	TRANSMISSION
H =HIGHLINE	T =JEEP - 2WD	74 =SPORT UTILITY 4-DR	EKG=3.7L V6 Eng.	DG6=4-Spd. Auto. 42RLE Trans.
M =MEDIUM	J =JEEP - 4WD		ENR=2.8L 4 Cyl Turbo Diesel Eng.	DGV=4-Spd. Auto. VLP Trans.
P =PREMIUM	U =JEEP - 4WD (RHD)		ENJ=2.5L 4 Cyl 16V Turbo Diesel Eng.	DGQ=5-Spd Auto. 5-45RFE Trans.
			ED1=2.4L 4 Cyl DOHC 16v SMPI Eng.	DEH=6-Speed Man. NSG370 Trans.
				DDD=5-Speed HD Man. Trans.
				DDK=5-Speed HD Man. Trans.

Camshaft and Valves, 2.8L Diesel [ENR]
Figure 2.8L-505

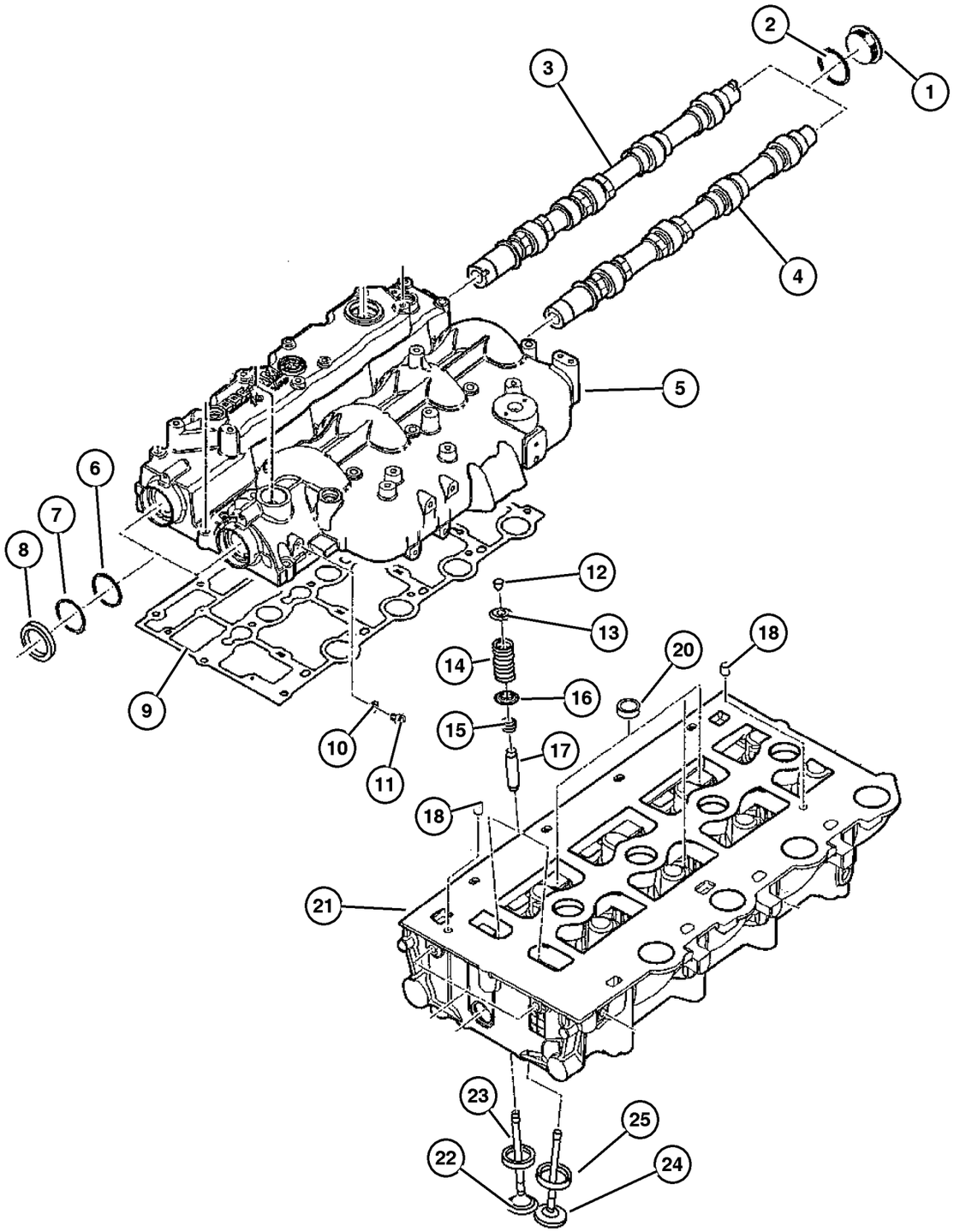

ITEM	PART NUMBER	QTY	LINE	SERIES	BODY	ENGINE	TRANS	TRIM	DESCRIPTION
	5066 958AA	2				EN0	DG0		
		2				EN0	DBB		
9									GASKET, Valve Cover
	5066 786AA	1				EN0	DG0		
		1				EN0	DBB		
10									WASHER, Implement Attaching
	4720 713	5				EN0	DG0		
		5				EN0	DBB		
11									PLUG, Cylinder Block
	5066 787AA	2				EN0	DG0		
		2				EN0	DBB		
12									LOCK, Valve Spring Retainer
	5066 778AA	32				EN0	DG0		
		32				EN0	DBB		
13									RETAINER, Valve Spring
	5093 892AA	16				EN0	DG0		
		15				EN0	DBB		
14									SPRING, Valve
	5066 776AA	16				EN0	DG0		
		16				EN0	DBB		
15									SEAL, Valve Guide
	5093 891AA	16				EN0	DG0		
		16				EN0	DBB		
16									SEAL, Valve Guide
	5066 775AA	16				EN0	DG0		
		16				EN0	DBB		
17									GUIDE, Intake/Exhaust Valve, Standard Size
	5066 773AA	16				EN0	DG0		
		16				EN0	DBB		
18									DOWEL, Rocker
	4720 165	3				EN0	DG0		
		3				EN0	DBB		
-19									ROCKER ARM, Inlet and Exhaust Valve, Rocker Arms And Lifters Are Serviced As An Assembly Only
	5066 780AA-	16				EN0	DG0		
		16				EN0	DBB		
20									PLUG, Cylinder Block Oil Hole
	4723 211	5				EN0	DG0		
		5				EN0	DBB		
21									HEAD, Cylinder

2006 Liberty (KJ)

SERIES	LINE	BODY	ENGINE	TRANSMISSION
H =HIGHLINE	T =JEEP - 2WD	74 =SPORT UTILITY 4-DR	EKG=3.7L V6 Eng.	DG6=4-Spd. Auto. 42RLE Trans.
M =MEDIUM	J =JEEP - 4WD		ENR=2.8L 4 Cyl Turbo Diesel Eng.	DGV=4-Spd. Auto. VLP Trans.
P =PREMIUM	U =JEEP - 4WD (RHD)		ENJ=2.5L 4 Cyl 16V Turbo Diesel Eng.	DGQ=5-Spd Auto. 5-45RFE Trans.
			ED1=2.4L 4 Cyl DOHC 16v SMPI Eng.	DEH=6-Speed Man. NSG370 Trans.
				DDD=5-Speed HD Man. Trans.
				DDK=5-Speed HD Man. Trans.

AR = Use as required - = Non illustrated part # = New this model year

Camshaft and Valves, 2.8L Diesel [ENR]
Figure 2.8L-505

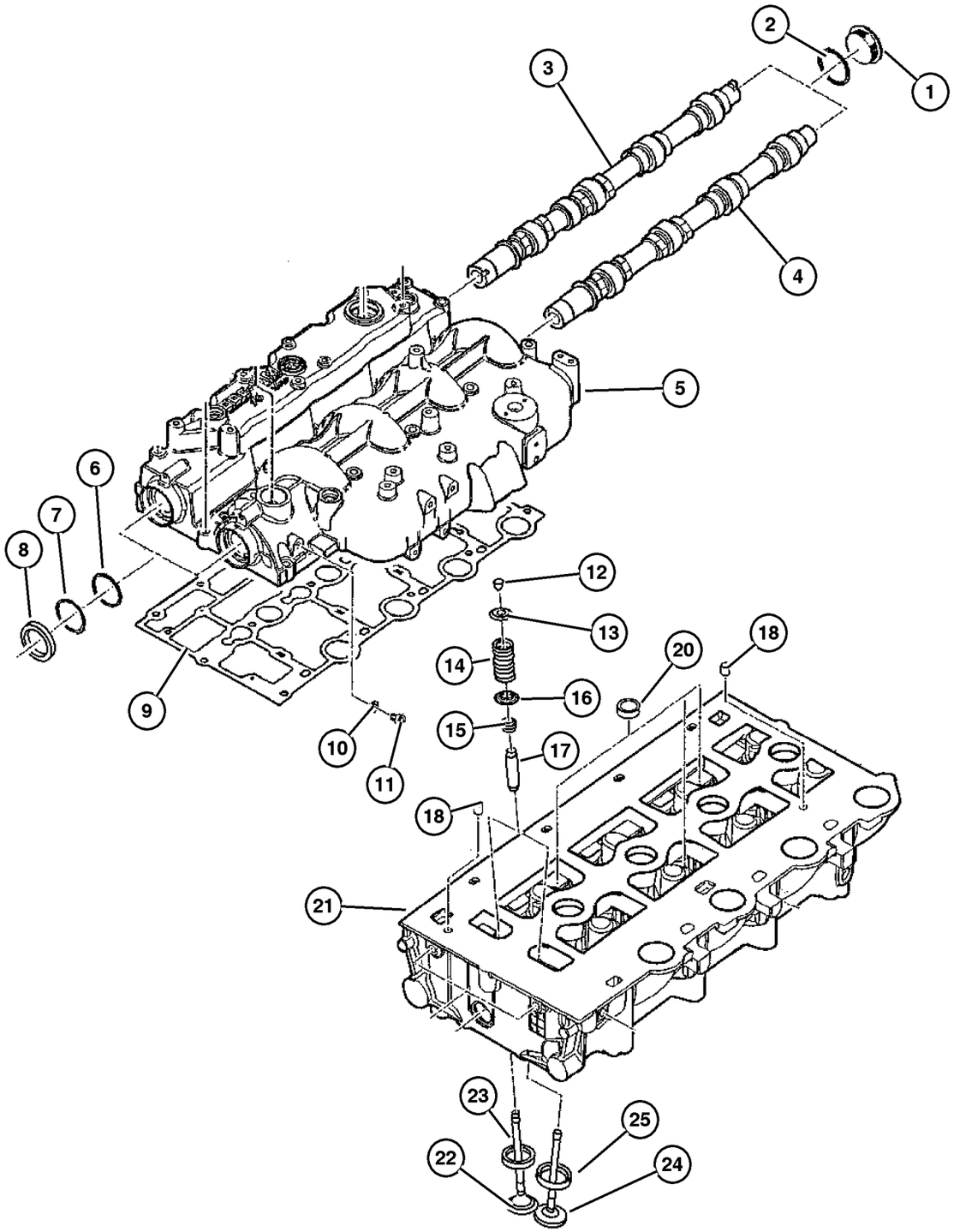

ITEM	PART NUMBER	QTY	LINE	SERIES	BODY	ENGINE	TRANS	TRIM	DESCRIPTION
	5159 955AB	1				EN0	DG0		
		1				EN0	DBB		
22									VALVE, Engine Exhaust
	5142 764AA	8				EN0	DG0		
		8				EN0	DBB		
23									SEAT, Exhaust Valve, 0.30mm Oversize
	5066 771AA	8				EN0	DG0		
		8				EN0	DBB		
24									VALVE, Intake, Standard
	5066 770AA	8				EN0	DG0		
		8				EN0	DBB		
25									SEAT, Intake Valve
	5066 772AA	8				EN0	DG0		
		8				EN0	DBB		

2006 Liberty (KJ)

SERIES	LINE	BODY	ENGINE	TRANSMISSION
H =HIGHLINE	T =JEEP - 2WD	74 =SPORT UTILITY 4-DR	EKG=3.7L V6 Eng.	DG6=4-Spd. Auto. 42RLE Trans.
M =MEDIUM	J =JEEP - 4WD		ENR=2.8L 4 Cyl Turbo Diesel Eng.	DGV=4-Spd. Auto. VLP Trans.
P =PREMIUM	U =JEEP - 4WD (RHD)		ENJ=2.5L 4 Cyl 16V Turbo Diesel Eng.	DGQ=5-Spd Auto. 5-45RFE Trans.
			ED1=2.4L 4 Cyl DOHC 16v SMPI Eng.	DEH=6-Speed Man. NSG370 Trans.
				DDD=5-Speed HD Man. Trans.
				DDK=5-Speed HD Man. Trans.

AR = Use as required - = Non illustrated part # = New this model year

Timing Cover, Belt and Gears 2.8L Diesel [ENR]
Figure 2.8L-605

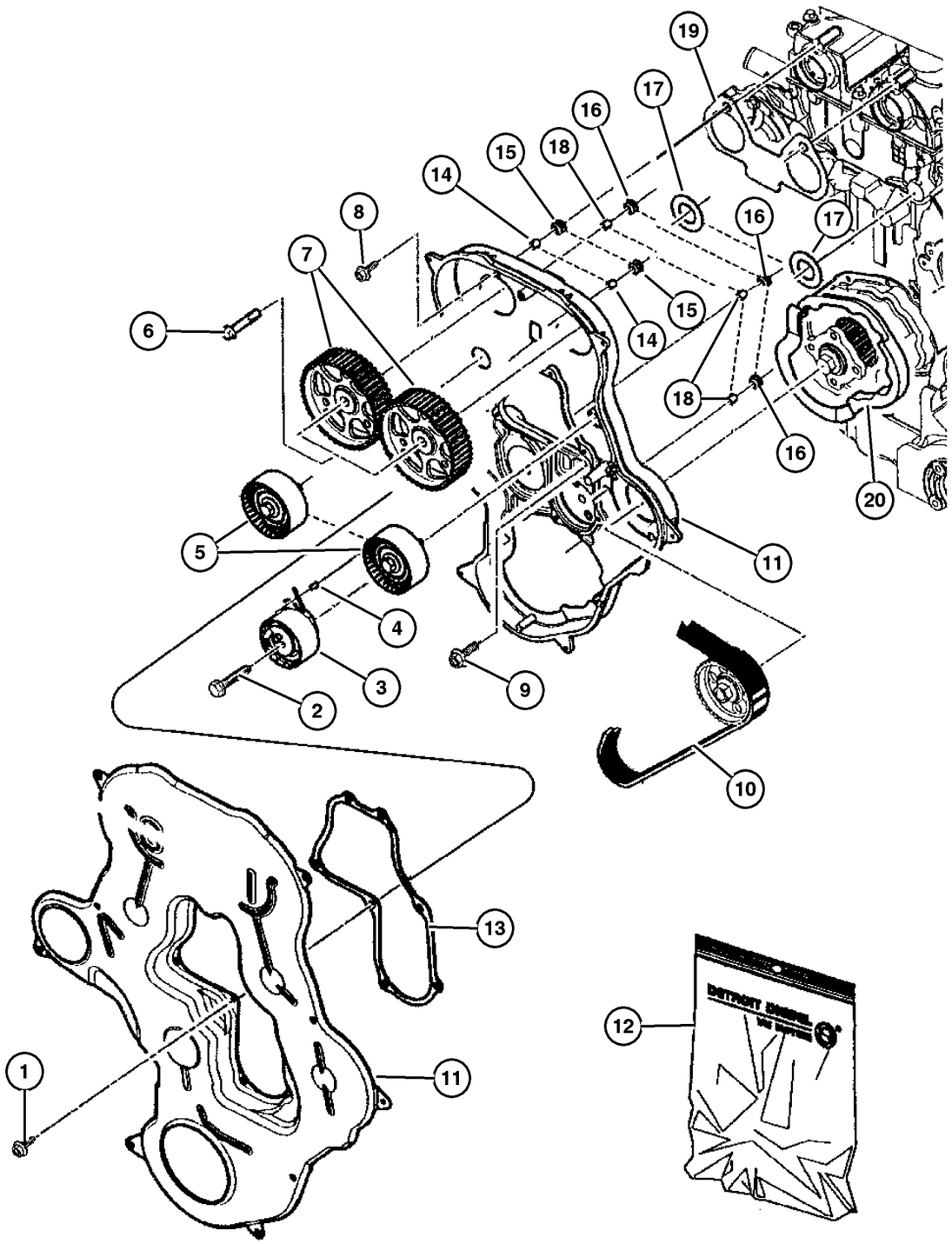

ITEM	PART NUMBER	QTY	LINE	SERIES	BODY	ENGINE	TRANS	TRIM	DESCRIPTION
NOTE:									
Sales Codes:									
[DBB]=All Manual Transmissions									
[DEH]=6-Speed Manual NSG370 Transmission									
[DGQ]=5-Speed Automatic 5-45RFE Transmission									
[DGV]=4-Speed Automatic VLP Transmission									
[DG0]=All Automatic Transmissions									
[DG6]=4-Speed Automatic 42RLE Transmission									
[DHE]=Command-Trac H.D. Part Time NVG 241 GII Transfer Case									
[DHN]=Command-Trac Part Time NVG 231 Transfer Case									
[DHP]=Selec-Trac Full Time NVG 242 Transfer Case									
[EKG]=3.7L "Magnum" V-6 Engine									
[EK0]=All 3.7L 6-Cylinder Gas Engines									
[ENR]=2.8L 4-Cylinder Turbo Diesel Engine									
[EN0]=All 4/5 Cylinder Diesel Engines									
[NAA]=Federal Emissions									
[NAE]=California Emissions									
[NAS]=50 States Emissions									
1									SCREW
	5069 112AA	17				EN0	DG0		
		17				EN0	DBB		
2									SCREW
	5015 031AA	5				EN0	DG0		
		5				EN0	DBB		
3									TENSIONER, Belt
	5142 798AA	1				EN0	DG0		
		1				EN0	DBB		
4									DOWEL, Front Cover, (NOT REQUIRED)
5	5142 573AA	2				EN0	DG0		PULLEY, Idler
6									SCREW
	4897 825AA	2				EN0	DG0		
		2				EN0	DBB		
7									GEAR, Balance Shaft
	5066 926AA	2				EN0	DG0		
		2				EN0	DBB		
8									SCREW
	5069 114AA	5				EN0	DG0		
		5				EN0	DBB		
9									BOLT, Adaptor Plate
	5003 532AB	10				EN0	DG0		
		10				EN0	DBB		
10									BELT, Timing

2006 Liberty (KJ)

SERIES	LINE	BODY	ENGINE	TRANSMISSION
H =HIGHLINE	T =JEEP - 2WD	74 =SPORT UTILITY 4-DR	EKG=3.7L V6 Eng.	DG6=4-Spd. Auto. 42RLE Trans.
M =MEDIUM	J =JEEP - 4WD		ENR=2.8L 4 Cyl Turbo Diesel Eng.	DGV=4-Spd. Auto. VLP Trans.
P =PREMIUM	U =JEEP - 4WD (RHD)		ENJ=2.5L 4 Cyl 16V Turbo Diesel Eng.	DGQ=5-Spd Auto. 5-45RFE Trans.
			ED1=2.4L 4 Cyl DOHC 16v SMPI Eng.	DEH=6-Speed Man. NSG370 Trans.
				DDD=5-Speed HD Man. Trans.
				DDK=5-Speed HD Man. Trans.

Timing Cover, Belt and Gears 2.8L Diesel [ENR]
Figure 2.8L-605

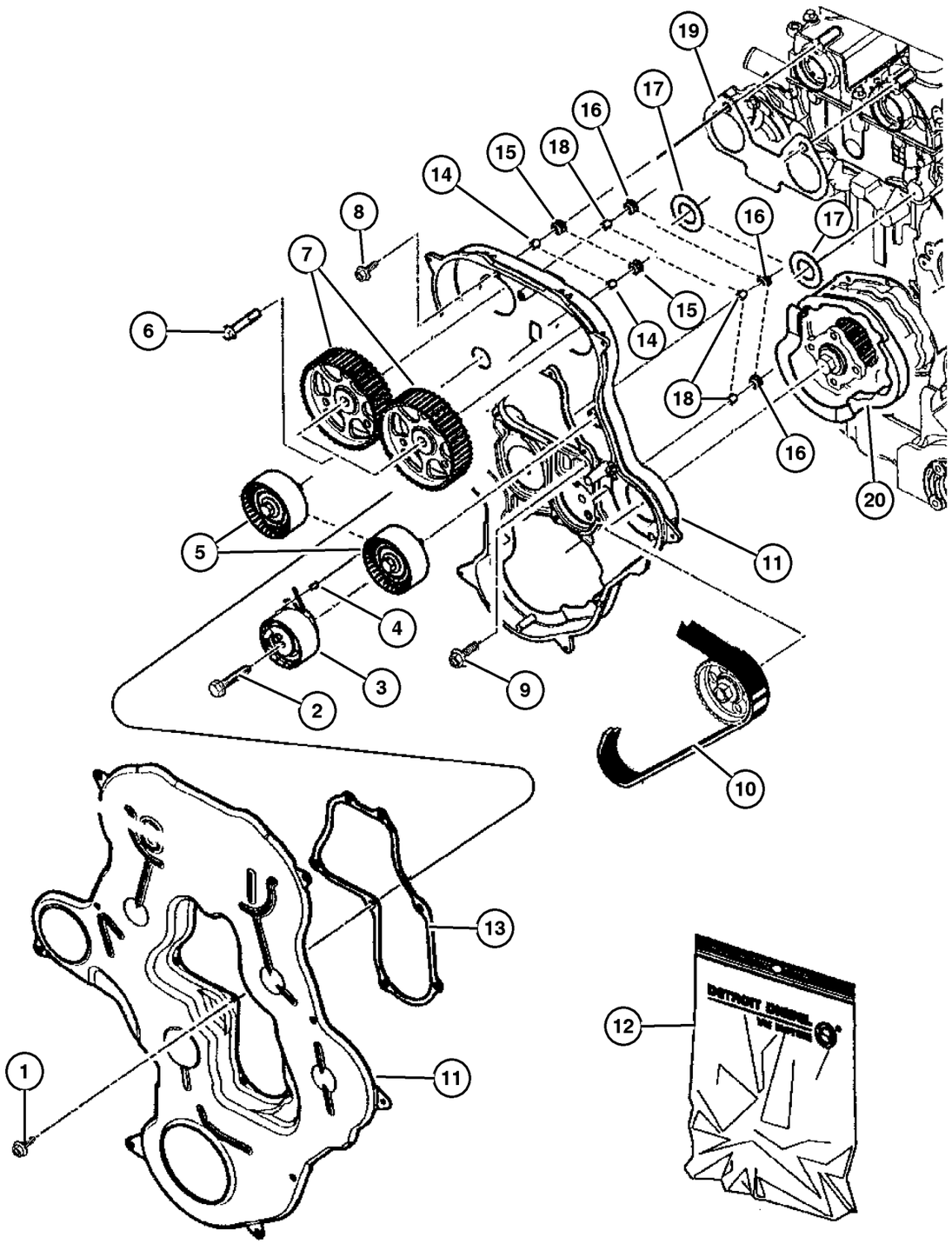

ITEM	PART NUMBER	QTY	LINE	SERIES	BODY	ENGINE	TRANS	TRIM	DESCRIPTION
	5142 579AA	1				EN0	DG0		
		1				EN0	DBB		
11									COVER, Timing Case, Kit
	5159 211AA	1				EN0	DG0		
		1				EN0	DBB		
12									GASKET KIT, Timing Cover
	5019 861AA	1				EN0	DG0		
		1				EN0	DBB		
13									GASKET, Timing Cover, Serviced in Cover and Gasket Kit
	5066 921AA	1				EN0	DG0		
		1				EN0	DBB		
14									BUSHING, Serviced in Cover and Gasket Kit, (NOT SERVICED) (Not Serviced)
15									DAMPER, Vibration, Serviced in Cover and Gasket Kit, (NOT SERVICED) (Not Serviced)
16									DAMPER, Vibration, Serviced in Cover and Gasket Kit, (NOT SERVICED) (Not Serviced)
17									GASKET, Serviced in Cover and Gasket Kit, (NOT SERVICED) (Not Serviced)
18									BUSHING, Serviced in Cover and Gasket Kit, (NOT SERVICED) (Not Serviced)
19									GASKET, Serviced in Cover and Gasket Kit, (NOT SERVICED) (Not Serviced)
20									GASKET, Front Cover, Serviced in Gasket Kit, (NOT SERVICED) (Not Serviced)

2006 Liberty (KJ)

SERIES	LINE	BODY	ENGINE	TRANSMISSION
H =HIGHLINE	T =JEEP - 2WD	74 =SPORT UTILITY 4-DR	EKG=3.7L V6 Eng.	DG6=4-Spd. Auto. 42RLE Trans.
M =MEDIUM	J =JEEP - 4WD		ENR=2.8L 4 Cyl Turbo Diesel Eng.	DGV=4-Spd. Auto. VLP Trans.
P =PREMIUM	U =JEEP - 4WD (RHD)		ENJ=2.5L 4 Cyl 16V Turbo Diesel Eng.	DGQ=5-Spd Auto. 5-45RFE Trans.
			ED1=2.4L 4 Cyl DOHC 16v SMPI Eng.	DEH=6-Speed Man. NSG370 Trans.
				DDD=5-Speed HD Man. Trans.
				DDK=5-Speed HD Man. Trans.

Engine Oiling 2.8L Diesel [ENR]
Figure 2.8L-705

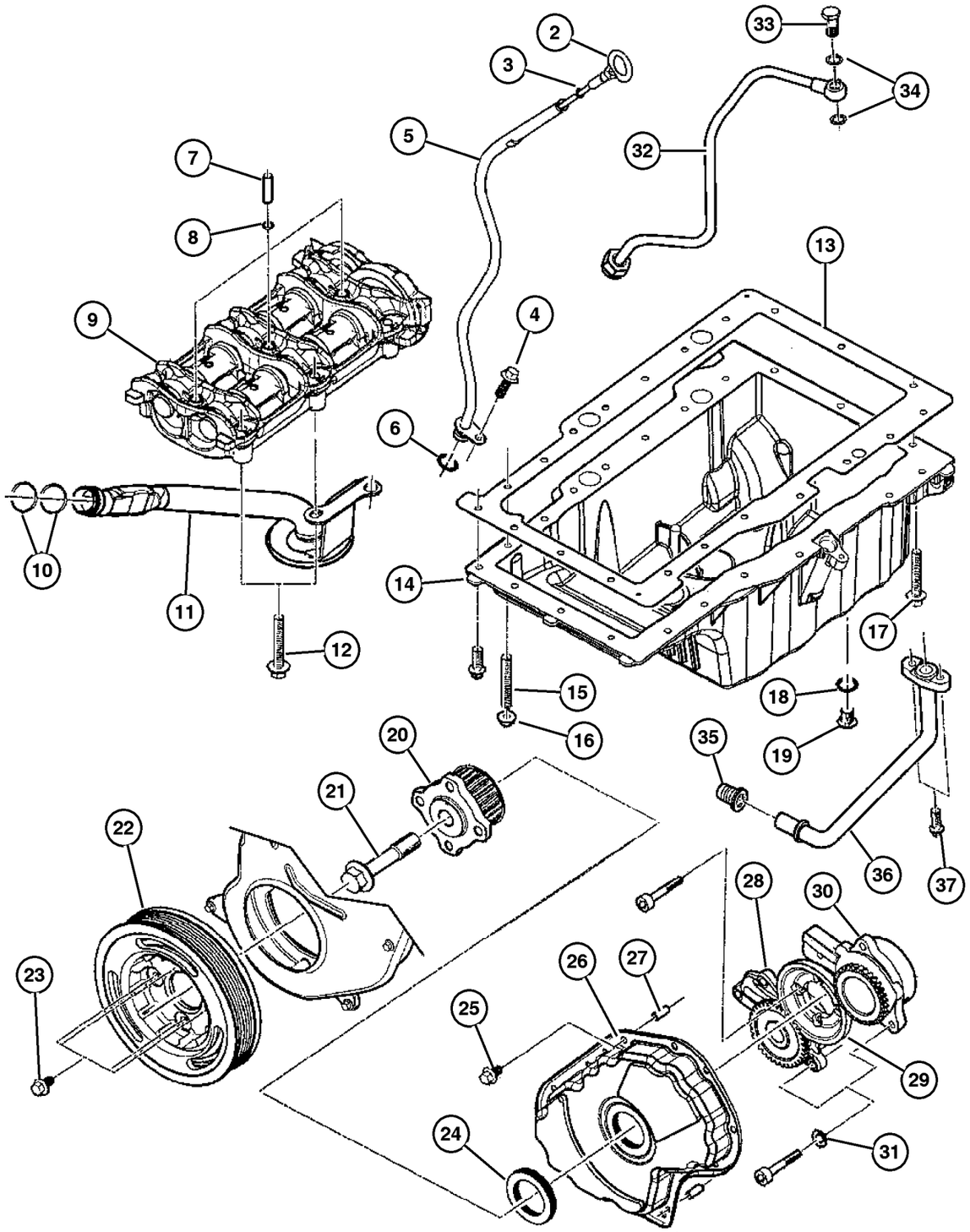

ITEM	PART NUMBER	QTY	LINE	SERIES	BODY	ENGINE	TRANS	TRIM	DESCRIPTION
NOTE:									
Sales Codes:									
[DBB]=All Manual Transmissions									
[DEH]=6-Speed Manual NSG370 Transmission									
[DGQ]=5-Speed Automatic 5-45RFE Transmission									
[DGV]=4-Speed Automatic VLP Transmission									
[DG0]=All Automatic Transmissions									
[DG6]=4-Speed Automatic 42RLE Transmission									
[DHE]=Command-Trac H.D. Part Time NVG 241 GII Transfer Case									
[DHN]=Command-Trac Part Time NVG 231 Transfer Case									
[DHP]=Selec-Trac Full Time NVG 242 Transfer Case									
[EKG]=3.7L ‘‘Magnum‘‘ V-6 Engine									
[EK0]=All 3.7L 6-Cylinder Gas Engines									
[ENR]=2.8L 4-Cylinder Turbo Diesel Engine									
[EN0]=All 4/5 Cylinder Diesel Engines									
[NAA]=Federal Emissions									
[NAE]=California Emissions									
[NAS]=50 States Emissions									
-1									FILTER, Engine Oil
	5003 558AA-	1				EN0	DG0		
		1				EN0	DBB		
2									INDICATOR, Engine Oil Level
	5142 662AB	1				EN0	DG0		
		1				EN0	DBB		
3									O RING, Engine Oil Indicator
	4720 373	1				EN0	DG0		
		1				EN0	DBB		
4									BOLT
	4864 748AB	1				EN0	DG0		
		1				EN0	DBB		
5									TUBE, Oil Gauge
	5142 658AA	1				EN0	DG0		
		1				EN0	DBB		
6									O RING
	5083 157AA	1				EN0	DG0		
		1				EN0	DBB		
7									PIN
	5093 899AA	3				EN0	DG0		
		3				EN0	DBB		
8									O RING
	5066 899AA	3				EN0	DG0		
		3				EN0	DBB		
9									SHAFT, Balance

2006 Liberty (KJ)

SERIES	LINE	BODY	ENGINE	TRANSMISSION
H =HIGHLINE	T =JEEP - 2WD	74 =SPORT UTILITY 4-DR	EKG=3.7L V6 Eng.	DG6=4-Spd. Auto. 42RLE Trans.
M =MEDIUM	J =JEEP - 4WD		ENR=2.8L 4 Cyl Turbo Diesel Eng.	DGV=4-Spd. Auto. VLP Trans.
P =PREMIUM	U =JEEP - 4WD (RHD)		ENJ=2.5L 4 Cyl 16V Turbo Diesel Eng.	DGQ=5-Spd Auto. 5-45RFE Trans.
			ED1=2.4L 4 Cyl DOHC 16v SMPI Eng.	DEH=6-Speed Man. NSG370 Trans.
				DDD=5-Speed HD Man. Trans.
				DDK=5-Speed HD Man. Trans.

Engine Oiling 2.8L Diesel [ENR]
Figure 2.8L-705

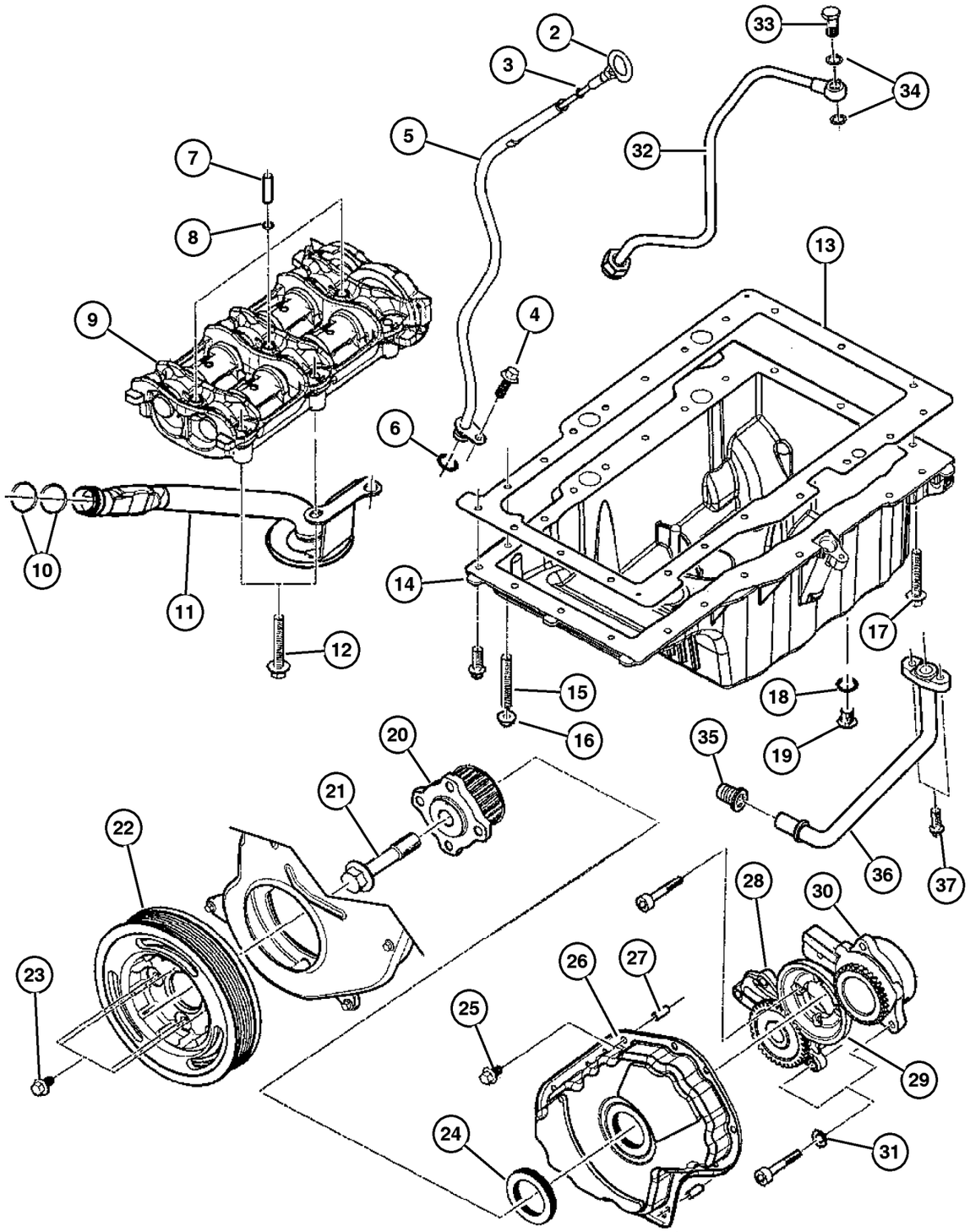

ITEM	PART NUMBER	QTY	LINE	SERIES	BODY	ENGINE	TRANS	TRIM	DESCRIPTION
	5140 336AA	1				EN0	DG0		
		1				EN0	DBB		
10									O RING, Oil Suction Tube
	5066 789AB	2				EN0	DG0		
		2				EN0	DBB		
11									PICKUP, Engine Oil
	5072 680AB	1				EN0	DG0		
		1				EN0	DBB		
12									SCREW
	5066 962AA	6				EN0	DG0		
		6				EN0	DBB		
13									GASKET, Oil Pan
	5142 656AB	1				EN0	DG0		
		1				EN0	DBB		
14									PAN, Engine Oil
	5142 548AB	1				EN0	DG0		
		1				EN0	DBB		
15									STUD
	5159 956AA	1				EN0	DG0		
		1				EN0	DBB		
16									NUT, Suction Pipe Attaching
	4778 936	1				EN0	DG0		
		1				EN0	DBB		
17	5003 556AA	3				EN0	DBB		BOLT
18									WASHER, Plain
	4720 353	1				EN0	DG0		
		1				EN0	DBB		
19									PLUG, Oil Drain
	4720 352	1				EN0	DG0		
		1				EN0	DBB		
20									PULLEY, Crankshaft
	5066 978AB	1				EN0	DG0		
		1				EN0	DBB		
21									SCREW
	5066 832AA	1				EN0	DG0		
		1				EN0	DBB		
22									PULLEY, Crankshaft
	5072 669AA	1				EN0	DG0		
		1				EN0	DBB		
23									SCREW, Damper Mounting
	5069 138AA	4				EN0	DG0		
		4				EN0	DBB		
24									SEAL, Front Main Crankshaft

2006 Liberty (KJ)

SERIES	LINE	BODY	ENGINE	TRANSMISSION
H =HIGHLINE	T =JEEP - 2WD	74 =SPORT UTILITY 4-DR	EKG=3.7L V6 Eng.	DG6=4-Spd. Auto. 42RLE Trans.
M =MEDIUM	J =JEEP - 4WD		ENR=2.8L 4 Cyl Turbo Diesel Eng.	DGV=4-Spd. Auto. VLP Trans.
P =PREMIUM	U =JEEP - 4WD (RHD)		ENJ=2.5L 4 Cyl 16V Turbo Diesel Eng.	DGQ=5-Spd Auto. 5-45RFE Trans.
			ED1=2.4L 4 Cyl DOHC 16v SMPI Eng.	DEH=6-Speed Man. NSG370 Trans.
				DDD=5-Speed HD Man. Trans.
				DDK=5-Speed HD Man. Trans.

AR = Use as required - = Non illustrated part # = New this model year

Engine Oiling 2.8L Diesel [ENR]
Figure 2.8L-705

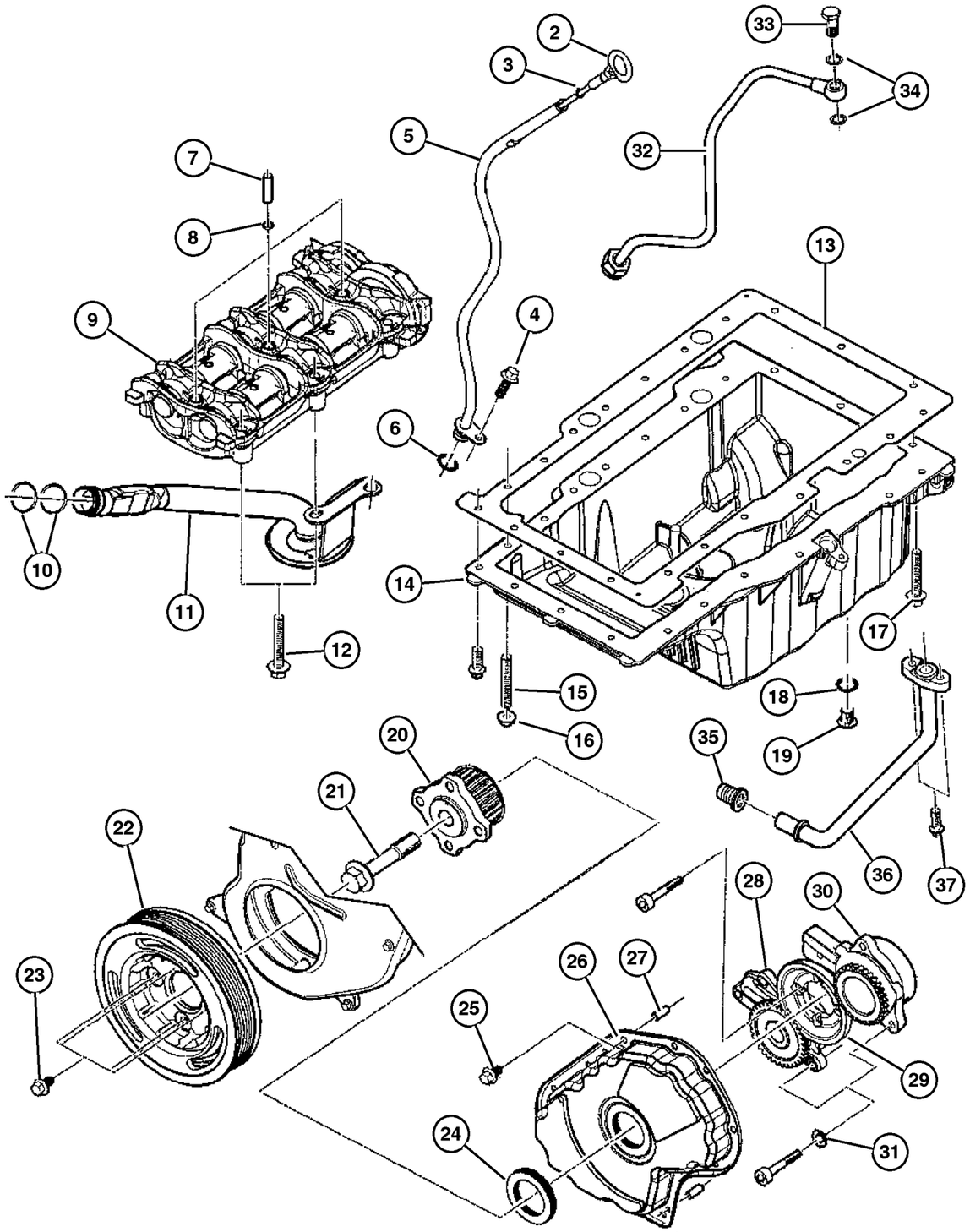

ITEM	PART NUMBER	QTY	LINE	SERIES	BODY	ENGINE	TRANS	TRIM	DESCRIPTION
	5072 670AA	1				EN0	DG0		
		1				EN0	DBB		
25									BOLT
	4864 748AB	1				EN0	DG0		
		1				EN0	DBB		
26									COVER, Timing Belt
	5066 955AA	1				EN0	DG0		
		1				EN0	DBB		
27									PIN
	5066 834AA	2				EN0	DG0		
		2				EN0	DBB		
28									PUMP, Engine Oil
	5093 890AA	1				EN0	DG0		
		1				EN0	DBB		
29									GEAR, Ring
	5066 835AA	1				EN0	DG0		
		1				EN0	DBB		
30									PUMP, Vacuum
	5066 768AA	1				EN0	DG0		
		1				EN0	DBB		
31									WASHER, Implement Attaching
	4720 713	5				EN0	DG0		
		5				EN0	DBB		
32									PIPE
	5142 607AA	1				EN0	DG0		
		1				EN0	DBB		
33									SCREW
	5142 792AA	1				EN0	DG0		
		1				EN0	DBB		
34									WASHER, Implement Attaching
	4720 713	5				EN0	DG0		
		5				EN0	DBB		
35									SEAL, Oil Drain Pipe
	5142 794AA	1				EN0	DG0		
		1				EN0	DBB		
36									PIPE, Turbo Oil Drain
	5183 073AA	1				EN0	DG0		
		1				EN0	DBB		
37									SCREW
	5066 944AB	8				EN0	DG0		
		8				EN0	DBB		

2006 Liberty (KJ)

SERIES	LINE	BODY	ENGINE	TRANSMISSION
H =HIGHLINE	T =JEEP - 2WD	74 =SPORT UTILITY 4-DR	EKG=3.7L V6 Eng.	DG6=4-Spd. Auto. 42RLE Trans.
M =MEDIUM	J =JEEP - 4WD		ENR=2.8L 4 Cyl Turbo Diesel Eng.	DGV=4-Spd. Auto. VLP Trans.
P =PREMIUM	U =JEEP - 4WD (RHD)		ENJ=2.5L 4 Cyl 16V Turbo Diesel Eng.	DGQ=5-Spd Auto. 5-45RFE Trans.
			ED1=2.4L 4 Cyl DOHC 16v SMPI Eng.	DEH=6-Speed Man. NSG370 Trans.
				DDD=5-Speed HD Man. Trans.
				DDK=5-Speed HD Man. Trans.

AR = Use as required - = Non illustrated part # = New this model year

Oil Passages and Oil Cooler 2.8L Diesel [ENR]
Figure 2.8L-710

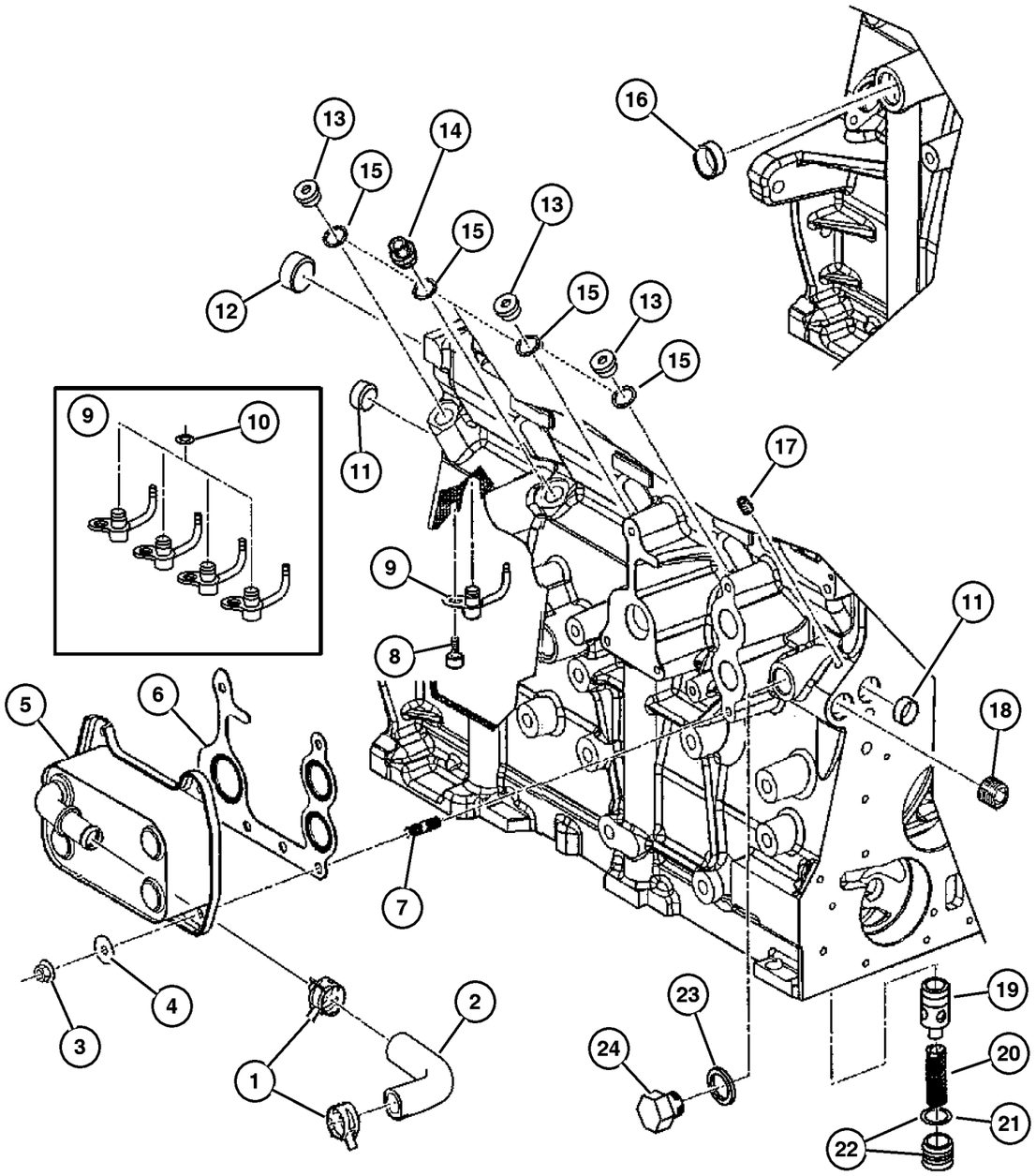

ITEM	PART NUMBER	QTY	LINE	SERIES	BODY	ENGINE	TRANS	TRIM	DESCRIPTION
NOTE:									
Sales Codes:									
[DBB]=All Manual Transmissions									
[DEH]=6-Speed Manual NSG370 Transmission									
[DGQ]=5-Speed Automatic 5-45RFE Transmission									
[DGV]=4-Speed Automatic VLP Transmission									
[DG0]=All Automatic Transmissions									
[DG6]=4-Speed Automatic 42RLE Transmission									
[DHE]=Command-Trac H.D. Part Time NVG 241 GII Transfer Case									
[DHN]=Command-Trac Part Time NVG 231 Transfer Case									
[DHP]=Selec-Trac Full Time NVG 242 Transfer Case									
[EKG]=3.7L ‘‘Magnum‘‘ V-6 Engine									
[EK0]=All 3.7L 6-Cylinder Gas Engines									
[ENR]=2.8L 4-Cylinder Turbo Diesel Engine									
[EN0]=All 4/5 Cylinder Diesel Engines									
[NAA]=Federal Emissions									
[NAE]=California Emissions									
[NAS]=50 States Emissions									
1									CLAMP, Heater Hose
	4883 924AA	4				EN0	DG0		
		4				EN0	DBB		
2									HOSE
	5142 790AA	1				EN0	DG0		
		1				EN0	DBB		
3									NUT, Suction Pipe Attaching
	4778 936	8				EN0	DG0		
		8				EN0	DBB		
4									WASHER, Starter
	4723 279	6				EN0	DG0		
		6				EN0	DBB		
5	5142 820AA	1				EN0	DG0		COOLER, Oil
6									GASKET, Oil Cooler
	5142 816AA	1				EN0	DG0		
		1				EN0	DBB		
7									SCREW
	5135 263AA	2				EN0	DG0		
		2				EN0	DBB		
8									SCREW
	4882 620	4				EN0	DG0		
		4				EN0	DBB		
9									JET, Valve Body, Oil Jet Kit
	5143 079AA	1				EN0	DG0		

2006 Liberty (KJ)

SERIES	LINE	BODY	ENGINE	TRANSMISSION
H =HIGHLINE	T =JEEP - 2WD	74 =SPORT UTILITY 4-DR	EKG=3.7L V6 Eng.	DG6=4-Spd. Auto. 42RLE Trans.
M =MEDIUM	J =JEEP - 4WD		ENR=2.8L 4 Cyl Turbo Diesel Eng.	DGV=4-Spd. Auto. VLP Trans.
P =PREMIUM	U =JEEP - 4WD (RHD)		ENJ=2.5L 4 Cyl 16V Turbo Diesel Eng.	DGQ=5-Spd Auto. 5-45RFE Trans.
			ED1=2.4L 4 Cyl DOHC 16v SMPI Eng.	DEH=6-Speed Man. NSG370 Trans.
				DDD=5-Speed HD Man. Trans.
				DDK=5-Speed HD Man. Trans.

Oil Passages and Oil Cooler 2.8L Diesel [ENR]
Figure 2.8L-710

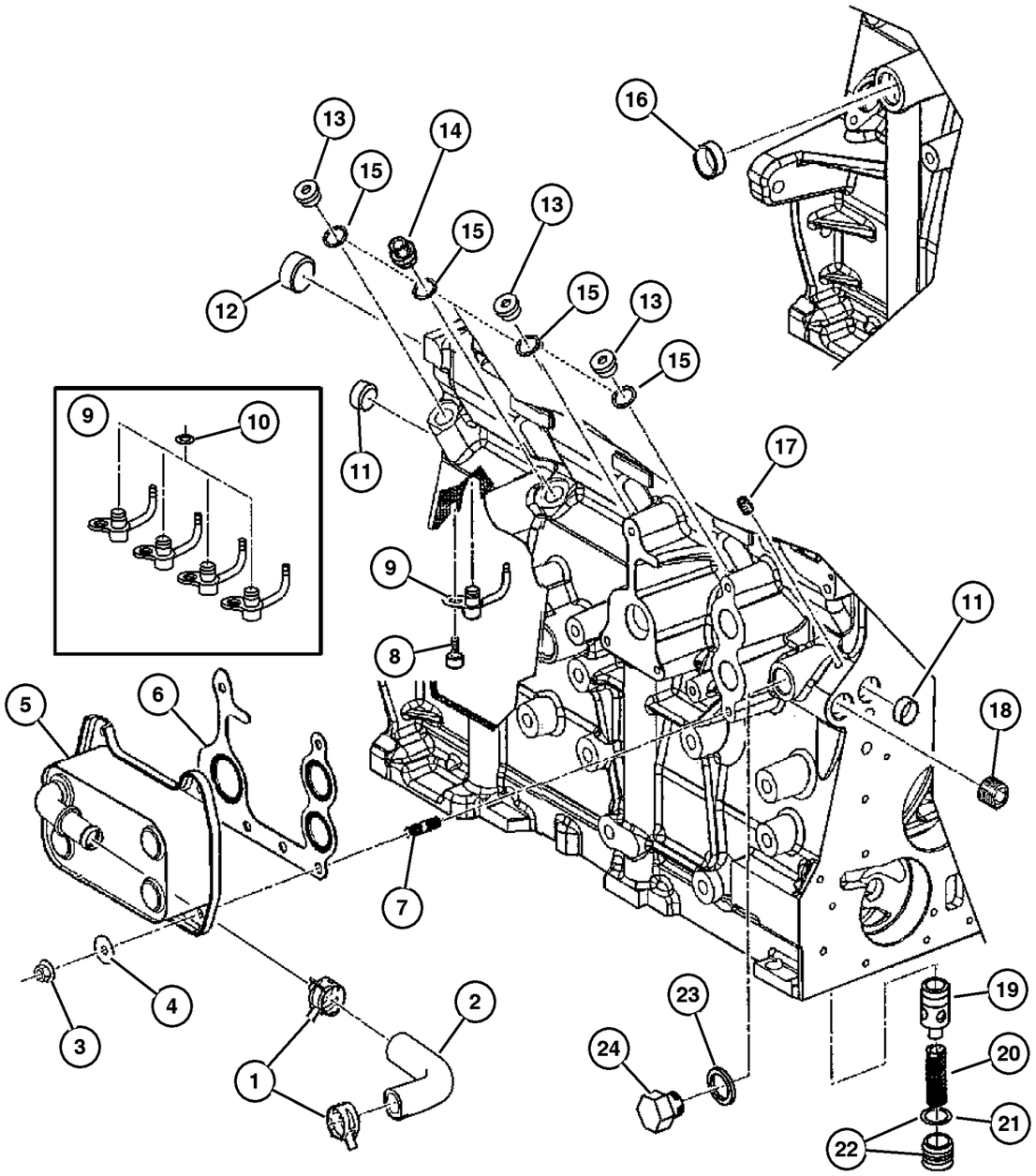

ITEM	PART NUMBER	QTY	LINE	SERIES	BODY	ENGINE	TRANS	TRIM	DESCRIPTION
		1				EN0	DBB		
10									O RING, Also serviced with Oil Jet Kit
	4864 689	4				EN0	DG0		
		4				EN0	DBB		
11									PLUG, Cylinder Block Oil Hole
	4723 211	5				EN0	DG0		
		5				EN0	DBB		
12									PLUG, Cylinder Block Oil Hole
	4778 887	1				EN0	DG0		
		1				EN0	DBB		
13									BOLT, Oil Feed To Turbo Adapter
	5066 889AA	3				EN0	DG0		
		3				EN0	DBB		
14									BOLT, Turbo Oil Feed Adapter
	5066 814AA	1				EN0	DG0		
		1				EN0	DBB		
15									WASHER, Oil Pressure Transduser
	4720 704	5				EN0	DG0		
		5				EN0	DBB		
16									PLUG
	5142 660AA	1				EN0	DG0		
		1				EN0	DBB		
17									PLUG, Cylinder Block
	4883 424AA	1				EN0	DG0		
		1				EN0	DBB		
18									PLUG
	4864 753	1				EN0	DG0		
		1				EN0	DBB		
19									VALVE, Oil Pressure Relief
	5066 816AA	1				EN0	DG0		
		1				EN0	DBB		
20									SPRING, Oil Pressure Relief Valve
	5093 915AA	1				EN0	DG0		
		1				EN0	DBB		
21									O RING
	5066 887AA	1				EN0	DG0		
		1				EN0	DBB		
22									PLUG, Oil Valve
	5142 550AA	1				EN0	DG0		
		1				EN0	DBB		
23									WASHER, Hose Adapter

2006 Liberty (KJ)

SERIES	LINE	BODY	ENGINE	TRANSMISSION
H =HIGHLINE	T =JEEP - 2WD	74 =SPORT UTILITY 4-DR	EKG=3.7L V6 Eng.	DG6=4-Spd. Auto. 42RLE Trans.
M =MEDIUM	J =JEEP - 4WD		ENR=2.8L 4 Cyl Turbo Diesel Eng.	DGV=4-Spd. Auto. VLP Trans.
P =PREMIUM	U =JEEP - 4WD (RHD)		ENJ=2.5L 4 Cyl 16V Turbo Diesel Eng.	DGQ=5-Spd Auto. 5-45RFE Trans.
			ED1=2.4L 4 Cyl DOHC 16v SMPI Eng.	DEH=6-Speed Man. NSG370 Trans.
				DDD=5-Speed HD Man. Trans.
				DDK=5-Speed HD Man. Trans.

Oil Passages and Oil Cooler 2.8L Diesel [ENR]
Figure 2.8L-710

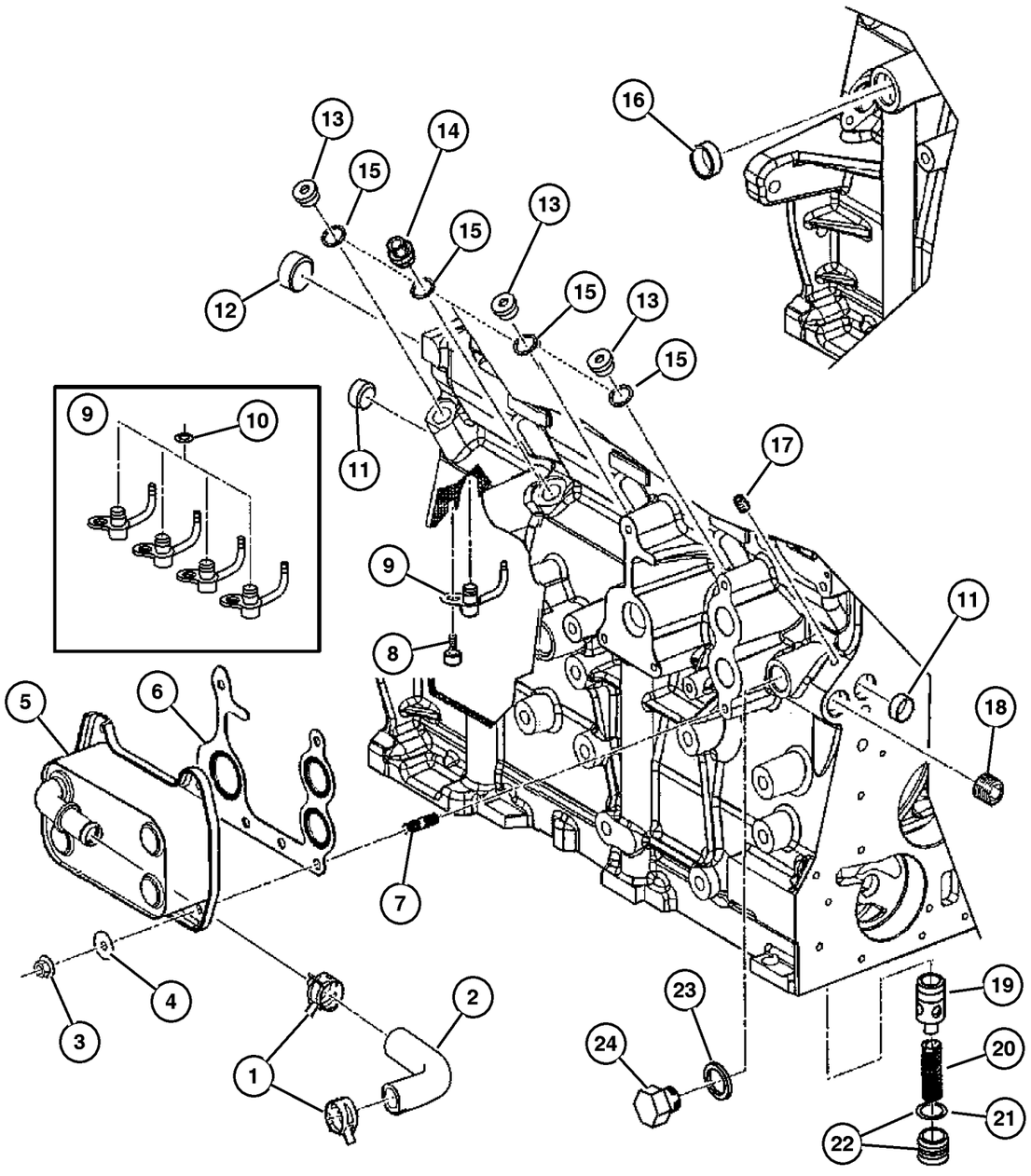

ITEM	PART NUMBER	QTY	LINE	SERIES	BODY	ENGINE	TRANS	TRIM	DESCRIPTION
	4720 564	1				EN0	DG0		
		1				EN0	DBB		
24									PLUG
	5142 803AA	1				EN0	DG0		
		1				EN0	DBB		

2006 Liberty (KJ)

SERIES	LINE	BODY	ENGINE	TRANSMISSION
H =HIGHLINE	T =JEEP - 2WD	74 =SPORT UTILITY 4-DR	EKG=3.7L V6 Eng.	DG6=4-Spd. Auto. 42RLE Trans.
M =MEDIUM	J =JEEP - 4WD		ENR=2.8L 4 Cyl Turbo Diesel Eng.	DGV=4-Spd. Auto. VLP Trans.
P =PREMIUM	U =JEEP - 4WD (RHD)		ENJ=2.5L 4 Cyl 16V Turbo Diesel Eng.	DGQ=5-Spd Auto. 5-45RFE Trans.
			ED1=2.4L 4 Cyl DOHC 16v SMPI Eng.	DEH=6-Speed Man. NSG370 Trans.
				DDD=5-Speed HD Man. Trans.
				DDK=5-Speed HD Man. Trans.

Exhaust Manifold and Vacuum Line 2.8L Diesel [ENR]
Figure 2.8L-805

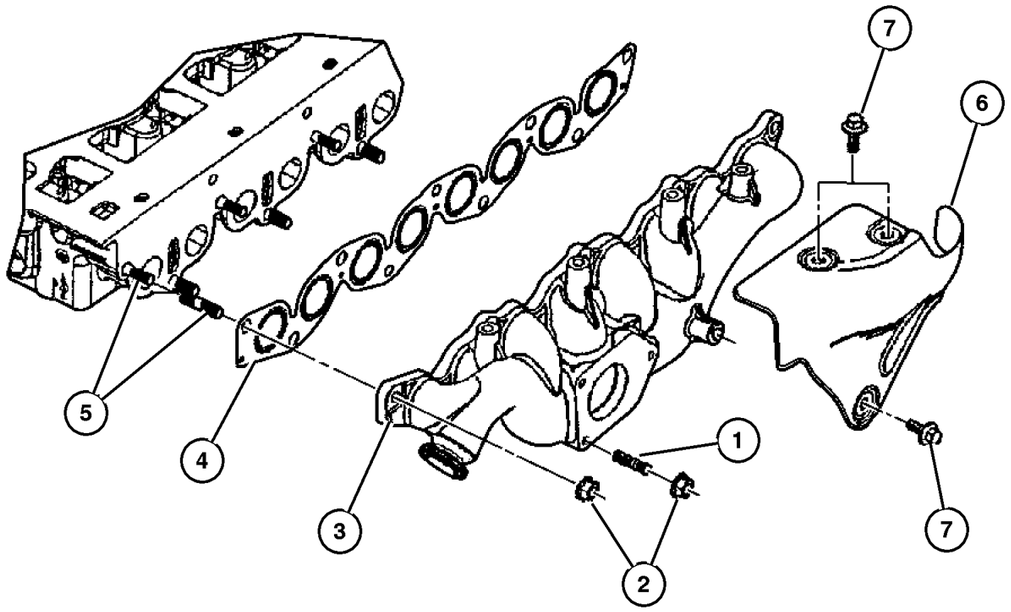

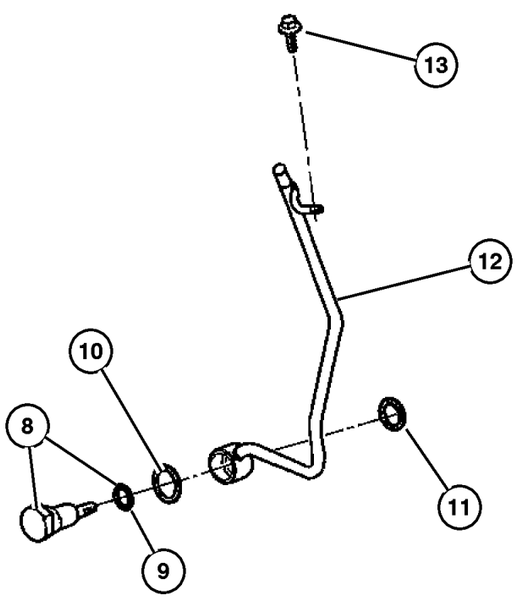

ITEM	PART NUMBER	QTY	LINE	SERIES	BODY	ENGINE	TRANS	TRIM	DESCRIPTION
NOTE:									
Sales Codes:									
[DBB]=All Manual Transmissions									
[DEH]=6-Speed Manual NSG370 Transmission									
[DGQ]=5-Speed Automatic 5-45RFE Transmission									
[DGV]=4-Speed Automatic VLP Transmission									
[DG0]=All Automatic Transmissions									
[DG6]=4-Speed Automatic 42RLE Transmission									
[DHE]=Command-Trac H.D. Part Time NVG 241 GII Transfer Case									
[DHN]=Command-Trac Part Time NVG 231 Transfer Case									
[DHP]=Selec-Trac Full Time NVG 242 Transfer Case									
[EKG]=3.7L ‘‘Magnum‘‘ V-6 Engine									
[EK0]=All 3.7L 6-Cylinder Gas Engines									
[ENR]=2.8L 4-Cylinder Turbo Diesel Engine									
[EN0]=All 4/5 Cylinder Diesel Engines									
[NAA]=Federal Emissions									
[NAE]=California Emissions									
[NAS]=50 States Emissions									
1									STUD
	5142 801AA	3				EN0	DG0		
		3				EN0	DBB		
2									NUT, Flange
	5142 578AA	3				EN0	DG0		
		3				EN0	DBB		
3									MANIFOLD, Exhaust
	5142 653AB	1				EN0	DG0		
		1				EN0	DBB		
4									GASKET, Intake/Exhaust Manifold
	5093 904AA	1				EN0	DG0		
		1				EN0	DBB		
5									STUD, Turbo Elbow
	5066 796AA	9				EN0	DG0		
		9				EN0	DBB		
6									SHIELD, Exhaust Manifold
	5142 614AA	1				EN0	DG0		
		1				EN0	DBB		
7									SCREW
	5072 688AA	4				EN0	DG0		
		4				EN0	DBB		
8									VALVE, Vacuum Pump
	5015 037AA	1				EN0	DG0		
		1				EN0	DBB		
9									O RING

2006 Liberty (KJ)

SERIES	LINE	BODY	ENGINE	TRANSMISSION
H =HIGHLINE	T =JEEP - 2WD	74 =SPORT UTILITY 4-DR	EKG=3.7L V6 Eng.	DG6=4-Spd. Auto. 42RLE Trans.
M =MEDIUM	J =JEEP - 4WD		ENR=2.8L 4 Cyl Turbo Diesel Eng.	DGV=4-Spd. Auto. VLP Trans.
P =PREMIUM	U =JEEP - 4WD (RHD)		ENJ=2.5L 4 Cyl 16V Turbo Diesel Eng.	DGQ=5-Spd Auto. 5-45RFE Trans.
			ED1=2.4L 4 Cyl DOHC 16v SMPI Eng.	DEH=6-Speed Man. NSG370 Trans.
				DDD=5-Speed HD Man. Trans.
				DDK=5-Speed HD Man. Trans.

Exhaust Manifold and Vacuum Line 2.8L Diesel [ENR]
Figure 2.8L-805

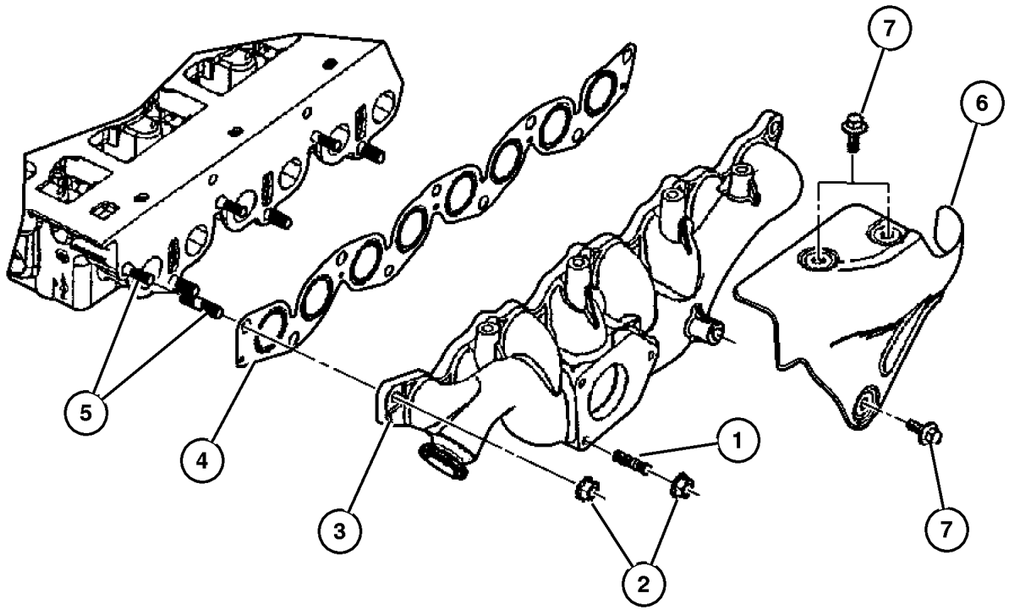

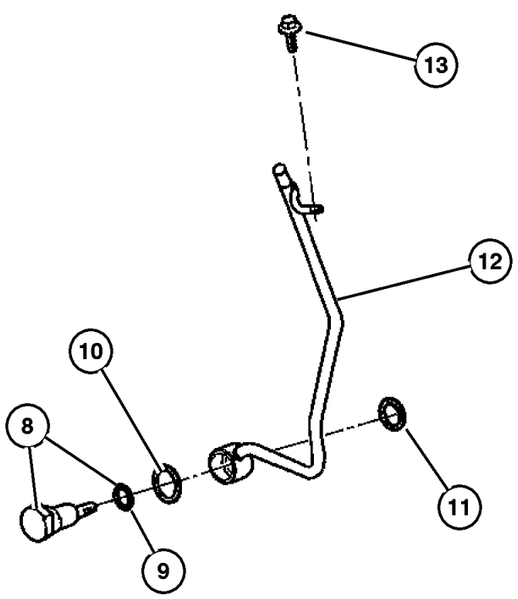

ITEM	PART NUMBER	QTY	LINE	SERIES	BODY	ENGINE	TRANS	TRIM	DESCRIPTION
	5066 860AA	1				EN0	DG0		
		1				EN0	DBB		
10									WASHER, Plain
	5015 040AA	1				EN0	DG0		
		1				EN0	DBB		
11									GASKET, Vacuum Pump, .
	4863 779	1				EN0	DG0		
		1				EN0	DBB		
12									LINE, Vacuum
	5142 786AA	1				EN0	DG0		
		1				EN0	DBB		
13									BOLT, M6x10
	5003 551AA	1				EN0	DG0		
		1				EN0	DBB		

2006 Liberty (KJ)

SERIES	LINE	BODY	ENGINE	TRANSMISSION
H =HIGHLINE	T =JEEP - 2WD	74 =SPORT UTILITY 4-DR	EKG=3.7L V6 Eng.	DG6=4-Spd. Auto. 42RLE Trans.
M =MEDIUM	J =JEEP - 4WD		ENR=2.8L 4 Cyl Turbo Diesel Eng.	DGV=4-Spd. Auto. VLP Trans.
P =PREMIUM	U =JEEP - 4WD (RHD)		ENJ=2.5L 4 Cyl 16V Turbo Diesel Eng.	DGQ=5-Spd Auto. 5-45RFE Trans.
			ED1=2.4L 4 Cyl DOHC 16v SMPI Eng.	DEH=6-Speed Man. NSG370 Trans.
				DDD=5-Speed HD Man. Trans.
				DDK=5-Speed HD Man. Trans.

Intake Manifold Air Lines 2.8L Diesel [ENR]
Figure 2.8L-810

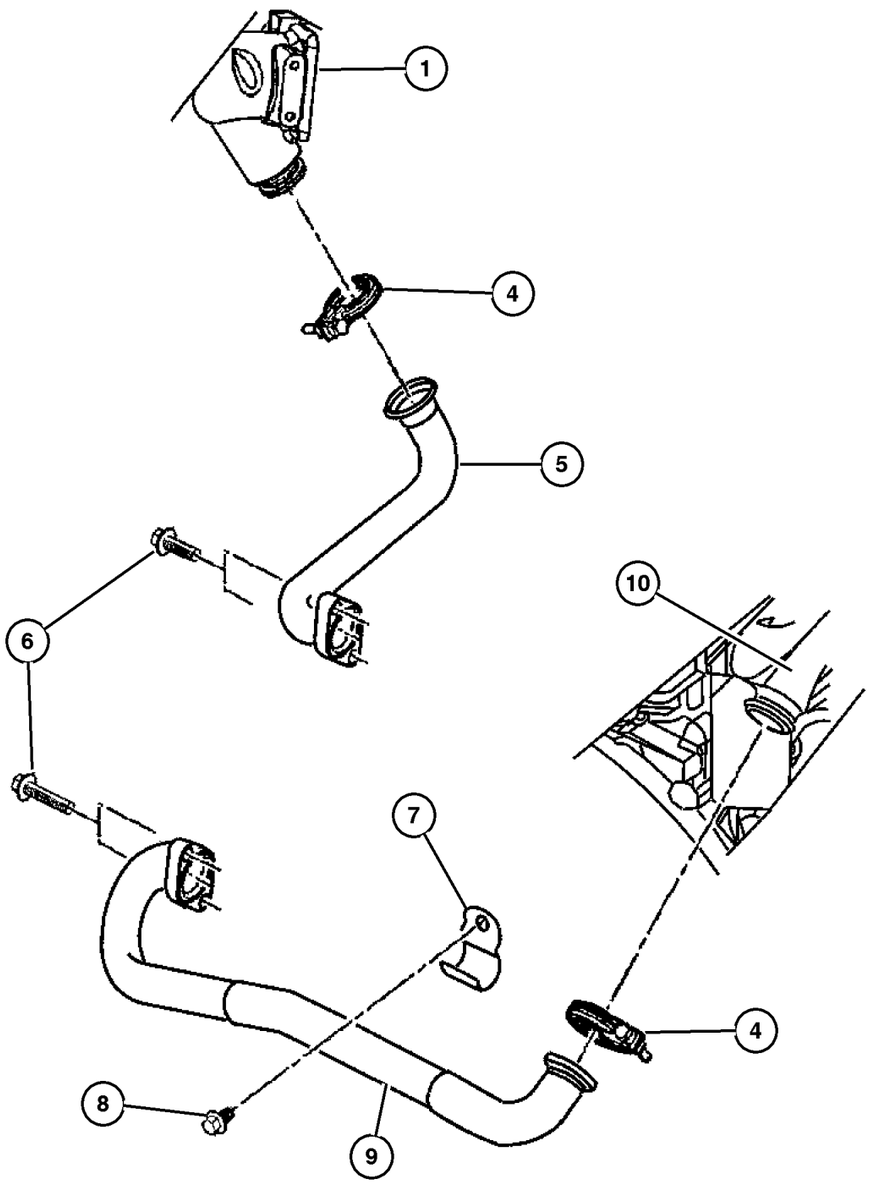

ITEM	PART NUMBER	QTY	LINE	SERIES	BODY	ENGINE	TRANS	TRIM	DESCRIPTION
NOTE:									
Sales Codes:									
[DBB]=All Manual Transmissions									
[DEH]=6-Speed Manual NSG370 Transmission									
[DGQ]=5-Speed Automatic 5-45RFE Transmission									
[DGV]=4-Speed Automatic VLP Transmission									
[DG0]=All Automatic Transmissions									
[DG6]=4-Speed Automatic 42RLE Transmission									
[DHE]=Command-Trac H.D. Part Time NVG 241 GII Transfer Case									
[DHN]=Command-Trac Part Time NVG 231 Transfer Case									
[DHP]=Selec-Trac Full Time NVG 242 Transfer Case									
[EKG]=3.7L ‘‘Magnum‘‘ V-6 Engine									
[EK0]=All 3.7L 6-Cylinder Gas Engines									
[ENR]=2.8L 4-Cylinder Turbo Diesel Engine									
[EN0]=All 4/5 Cylinder Diesel Engines									
[NAA]=Federal Emissions									
[NAE]=California Emissions									
[NAS]=50 States Emissions									
1									ELBOW, Air Intake
	5142 602AA	1				EN0	DG0		
		1				EN0	DBB		
-2									GASKET, Air Intake Elbow
	5066 946AA-	1				EN0	DG0		
		1				EN0	DBB		
-3									SCREW, Elbow Attaching
	5066 944AB-	8				EN0	DG0		
		8				EN0	DBB		
4	5142 994AA	2				EN0	DG0		CLAMP
5									PIPE, EGR, Support to EGR Kit
	5142 600AA	1				EN0	DBB		
	5170 787AB	1				EN0	DG0		
6	5066 963AA	4				EN0	DBB		SCREW
7									CLAMP
	5142 585AA	1				EN0	DG0		
		1				EN0	DBB		
8									BOLT
	4864 748AB	1				EN0	DG0		
		1				EN0	DBB		
9	5170 765AA	1				EN0	DG0		PIPE, EGR, Manifold to Valve
10									MANIFOLD, Exhaust, Reference, (NOT REQUIRED)
-11									VALVE, egr airflow control

2006 Liberty (KJ)

SERIES	LINE	BODY	ENGINE	TRANSMISSION
H =HIGHLINE	T =JEEP - 2WD	74 =SPORT UTILITY 4-DR	EKG=3.7L V6 Eng.	DG6=4-Spd. Auto. 42RLE Trans.
M =MEDIUM	J =JEEP - 4WD		ENR=2.8L 4 Cyl Turbo Diesel Eng.	DGV=4-Spd. Auto. VLP Trans.
P =PREMIUM	U =JEEP - 4WD (RHD)		ENJ=2.5L 4 Cyl 16V Turbo Diesel Eng.	DGQ=5-Spd Auto. 5-45RFE Trans.
			ED1=2.4L 4 Cyl DOHC 16v SMPI Eng.	DEH=6-Speed Man. NSG370 Trans.
				DDD=5-Speed HD Man. Trans.
				DDK=5-Speed HD Man. Trans.

Intake Manifold Air Lines 2.8L Diesel [ENR]
Figure 2.8L-810

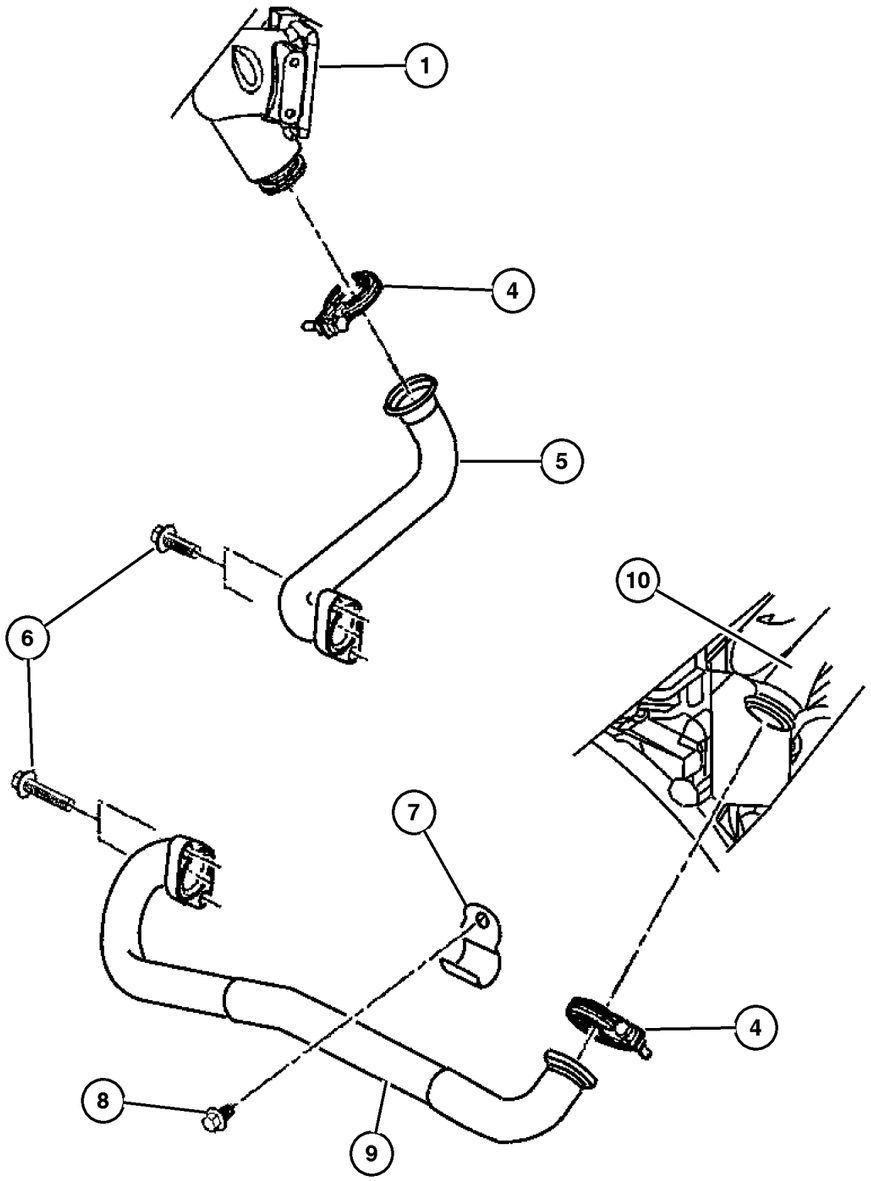

ITEM	PART NUMBER	QTY	LINE	SERIES	BODY	ENGINE	TRANS	TRIM	DESCRIPTION
	5142 799AA-	1				EN0	DG0		
		1				EN0	DBB		

2006 Liberty (KJ)

SERIES	LINE	BODY	ENGINE	TRANSMISSION
H =HIGHLINE	T =JEEP - 2WD	74 =SPORT UTILITY 4-DR	EKG=3.7L V6 Eng.	DG6=4-Spd. Auto. 42RLE Trans.
M =MEDIUM	J =JEEP - 4WD		ENR=2.8L 4 Cyl Turbo Diesel Eng.	DGV=4-Spd. Auto. VLP Trans.
P =PREMIUM	U =JEEP - 4WD (RHD)		ENJ=2.5L 4 Cyl 16V Turbo Diesel Eng.	DGQ=5-Spd Auto. 5-45RFE Trans.
			ED1=2.4L 4 Cyl DOHC 16v SMPI Eng.	DEH=6-Speed Man. NSG370 Trans.
				DDD=5-Speed HD Man. Trans.
				DDK=5-Speed HD Man. Trans.

Crankcase Ventilation 2.8L Diesel [ENR]
Figure 2.8L-905

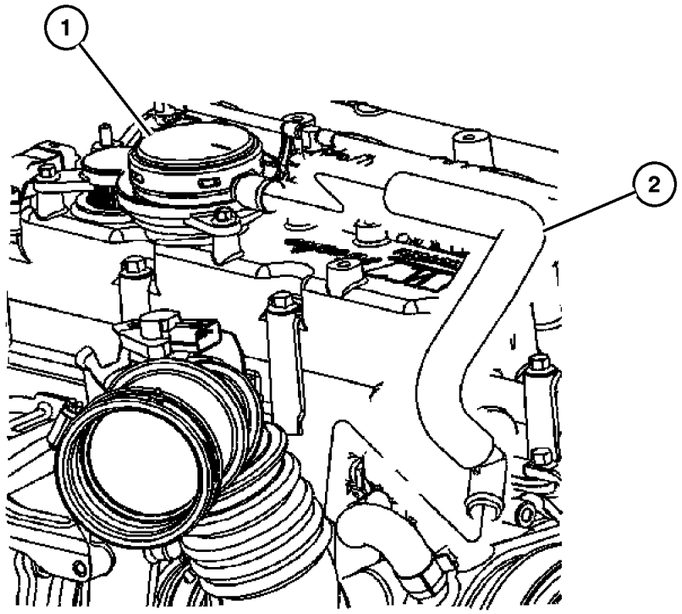

ITEM	PART NUMBER	QTY	LINE	SERIES	BODY	ENGINE	TRANS	TRIM	DESCRIPTION
NOTE:									
Sales Codes:									
[DBB]=All Manual Transmissions									
[DEH]=6-Speed Manual NSG370 Transmission									
[DGQ]=5-Speed Automatic 5-45RFE Transmission									
[DGV]=4-Speed Automatic VLP Transmission									
[DG0]=All Automatic Transmissions									
[DG6]=4-Speed Automatic 42RLE Transmission									
[DHE]=Command-Trac H.D. Part Time NVG 241 GII Transfer Case									
[DHN]=Command-Trac Part Time NVG 231 Transfer Case									
[DHP]=Selec-Trac Full Time NVG 242 Transfer Case									
[EKG]=3.7L ‘‘Magnum‘‘ V-6 Engine									
[EK0]=All 3.7L 6-Cylinder Gas Engines									
[ENR]=2.8L 4-Cylinder Turbo Diesel Engine									
[EN0]=All 4/5 Cylinder Diesel Engines									
[NAA]=Federal Emissions									
[NAE]=California Emissions									
[NAS]=50 States Emissions									
1									VALVE, Pressure Control
	5114 348AB	1				EN0	DG0		
		1				EN0	DBB		
2	53013 729AC	1				EN0			HOSE, Separator To Air Cleaner

2006 Liberty (KJ)

SERIES	LINE	BODY	ENGINE	TRANSMISSION
H =HIGHLINE	T =JEEP - 2WD	74 =SPORT UTILITY 4-DR	EKG=3.7L V6 Eng.	DG6=4-Spd. Auto. 42RLE Trans.
M =MEDIUM	J =JEEP - 4WD		ENR=2.8L 4 Cyl Turbo Diesel Eng.	DGV=4-Spd. Auto. VLP Trans.
P =PREMIUM	U =JEEP - 4WD (RHD)		ENJ=2.5L 4 Cyl 16V Turbo Diesel Eng.	DGQ=5-Spd Auto. 5-45RFE Trans.
			ED1=2.4L 4 Cyl DOHC 16v SMPI Eng.	DEH=6-Speed Man. NSG370 Trans.
				DDD=5-Speed HD Man. Trans.
				DDK=5-Speed HD Man. Trans.

Group – 011
Exhaust

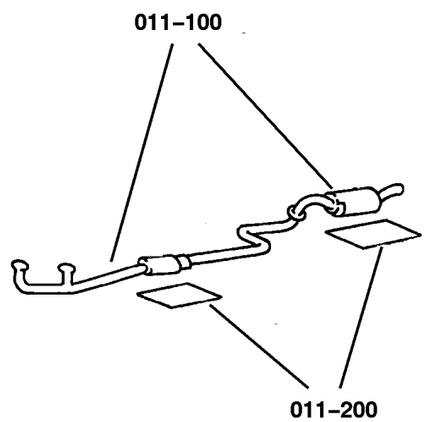

011–100 Exhaust System	011–200 Heat Shields		
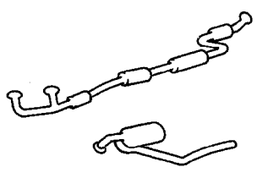	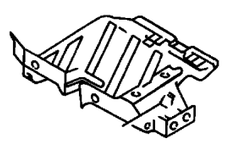		

GROUP 11 - Exhaust

Illustration Title — Group-Fig. No.

Exhaust System

Exhaust System 2.8L [EN0] . . . . . Fig. 011-110
Exhaust System 3.7L [EK0] . . . . . Fig. 011-130

Heat Shields

Heat Shields . . . . . Fig. 011-210

Exhaust System 2.8L [EN0]
Figure 011-110

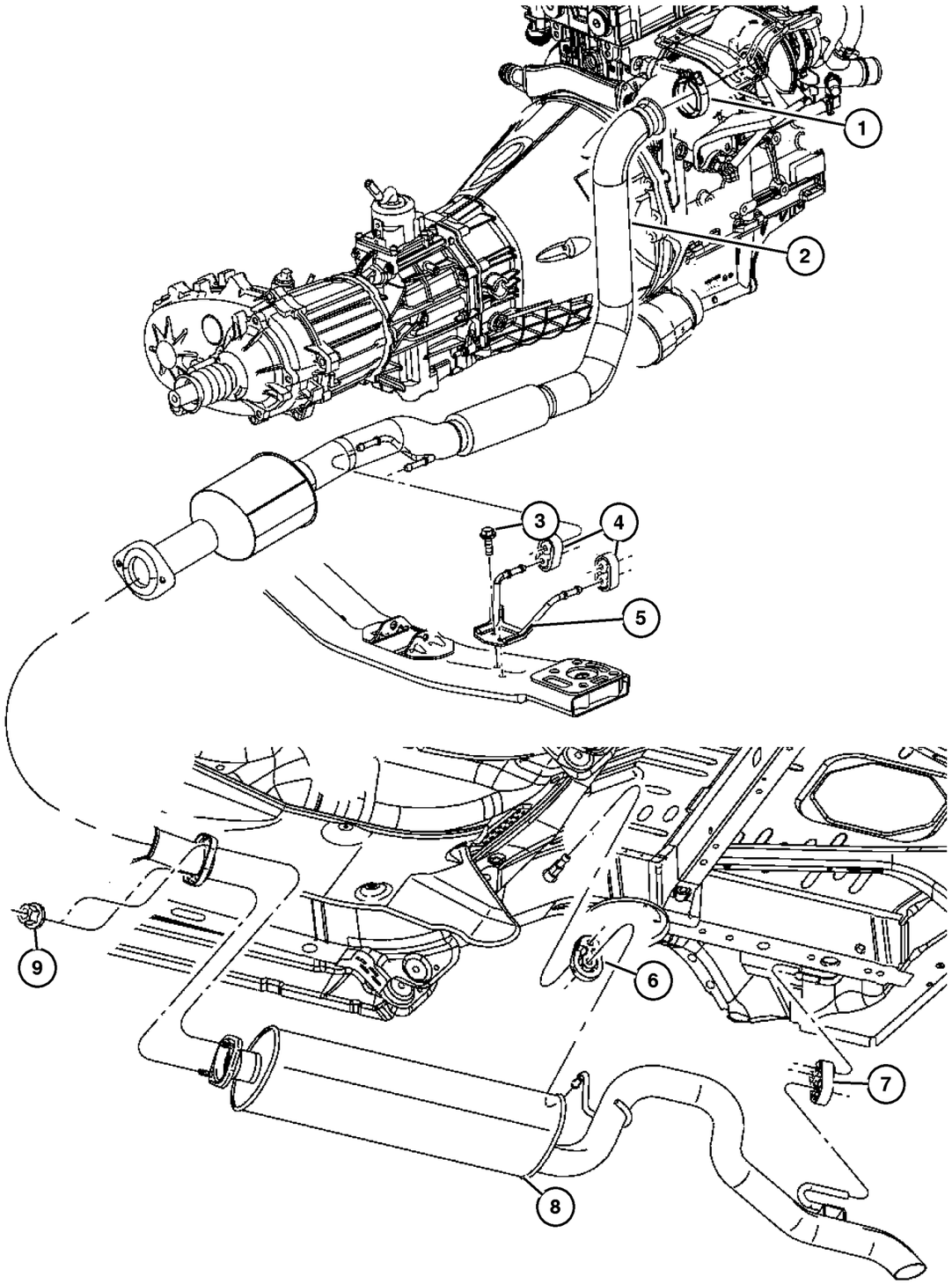

ITEM	PART NUMBER	QTY	LINE	SERIES	BODY	ENGINE	TRANS	TRIM	DESCRIPTION
Note; Sales Codes									
[EN0]= All 4/5 Cylinder Turbo Diesels									
1	52128 847AA	1				EN0			CLAMP, Turbo
2									PIPE AND CONVERTER, Exhaust
	52080 451AC	1	J, U			EN0			[NA1]
	52129 140AD	1	J, T			EN0			[NAA= NAE]
3	6101 611	2				EN0			SCREW AND WASHER, Hex Head, M8x1.25x25
4	5210 1035	2				EN0			INSULATOR, Exhaust
5	52128 686AB	1				EN0			HANGER, Exhaust
6	52128 501AA	1							ISOLATOR
7	52128 686AB	1				EN0			HANGER, Exhaust
8	52101 120AD	1							MUFFLER AND TAILPIPE, Exhaust
9	6101 696	2							NUT

2006 Liberty (KJ)

SERIES	LINE	BODY	ENGINE	TRANSMISSION
H =HIGHLINE	T =JEEP - 2WD	74 =SPORT UTILITY 4-DR	EKG=3.7L V6 Eng.	DG6=4-Spd. Auto. 42RLE Trans.
M =MEDIUM	J =JEEP - 4WD		ENR=2.8L 4 Cyl Turbo Diesel Eng.	DGV=4-Spd. Auto. VLP Trans.
P =PREMIUM	U =JEEP - 4WD (RHD)		ENJ=2.5L 4 Cyl 16V Turbo Diesel Eng.	DGQ=5-Spd Auto. 5-45RFE Trans.
			ED1=2.4L 4 Cyl DOHC 16v SMPI Eng.	DEH=6-Speed Man. NSG370 Trans.
				DDD=5-Speed HD Man. Trans.
				DDK=5-Speed HD Man. Trans.

Exhaust System 3.7L [EK0]
Figure 011-130

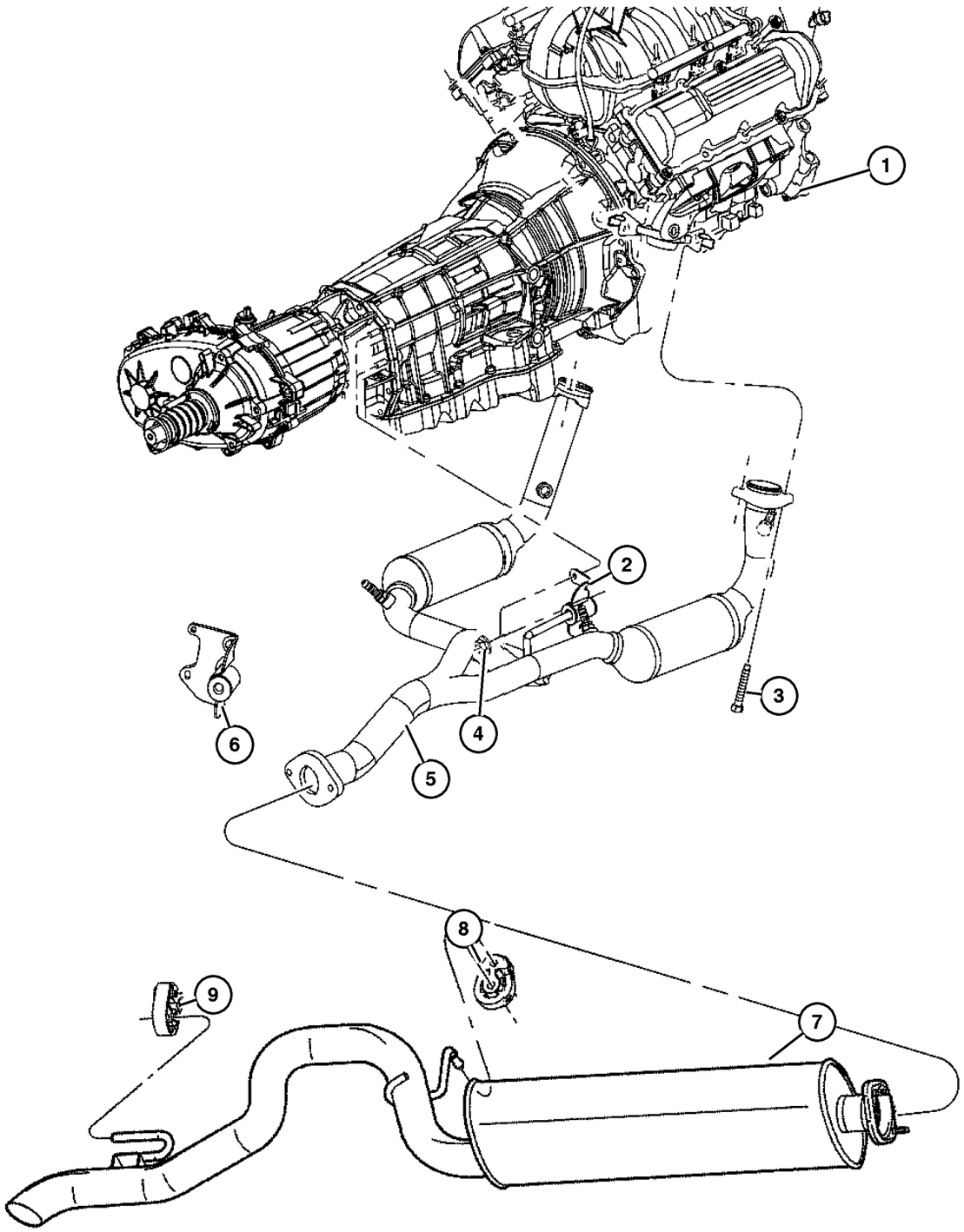

ITEM	PART NUMBER	QTY	LINE	SERIES	BODY	ENGINE	TRANS	TRIM	DESCRIPTION
Note; Sales Codes [EK0]= All 3.7L 6 Cylinder Gas Engines									
1	6508 305AA	4				EK0			LOCK NUT, M10-1.50
2	52128 668AB	1				EK0	DG0		HANGER, Exhaust
3	6104 426AA	4				EK0			BOLT AND CONED WASHER, Hex Head, Frt Pipe to Manifold
4	6102 252AA	4							NUT, Hex Flange Lock
5	52129 078AD	1				EK0			PIPE AND CONVERTER, Exhaust, To Manifold
6	52128 905AA	1				EK0	DBB		HANGER, Exhaust
7	52101 120AD	1							MUFFLER AND TAILPIPE, Exhaust
8	52128 501AA	1							ISOLATOR
9	52101 126AA	1							ISOLATOR, Exhaust

2006 Liberty (KJ)

SERIES	LINE	BODY	ENGINE	TRANSMISSION
H =HIGHLINE	T =JEEP - 2WD	74 =SPORT UTILITY 4-DR	EKG=3.7L V6 Eng.	DG6=4-Spd. Auto. 42RLE Trans.
M =MEDIUM	J =JEEP - 4WD		ENR=2.8L 4 Cyl Turbo Diesel Eng.	DGV=4-Spd. Auto. VLP Trans.
P =PREMIUM	U =JEEP - 4WD (RHD)		ENJ=2.5L 4 Cyl 16V Turbo Diesel Eng.	DGQ=5-Spd Auto. 5-45RFE Trans.
			ED1=2.4L 4 Cyl DOHC 16v SMPI Eng.	DEH=6-Speed Man. NSG370 Trans.
				DDD=5-Speed HD Man. Trans.
				DDK=5-Speed HD Man. Trans.

Heat Shields
Figure 011-210

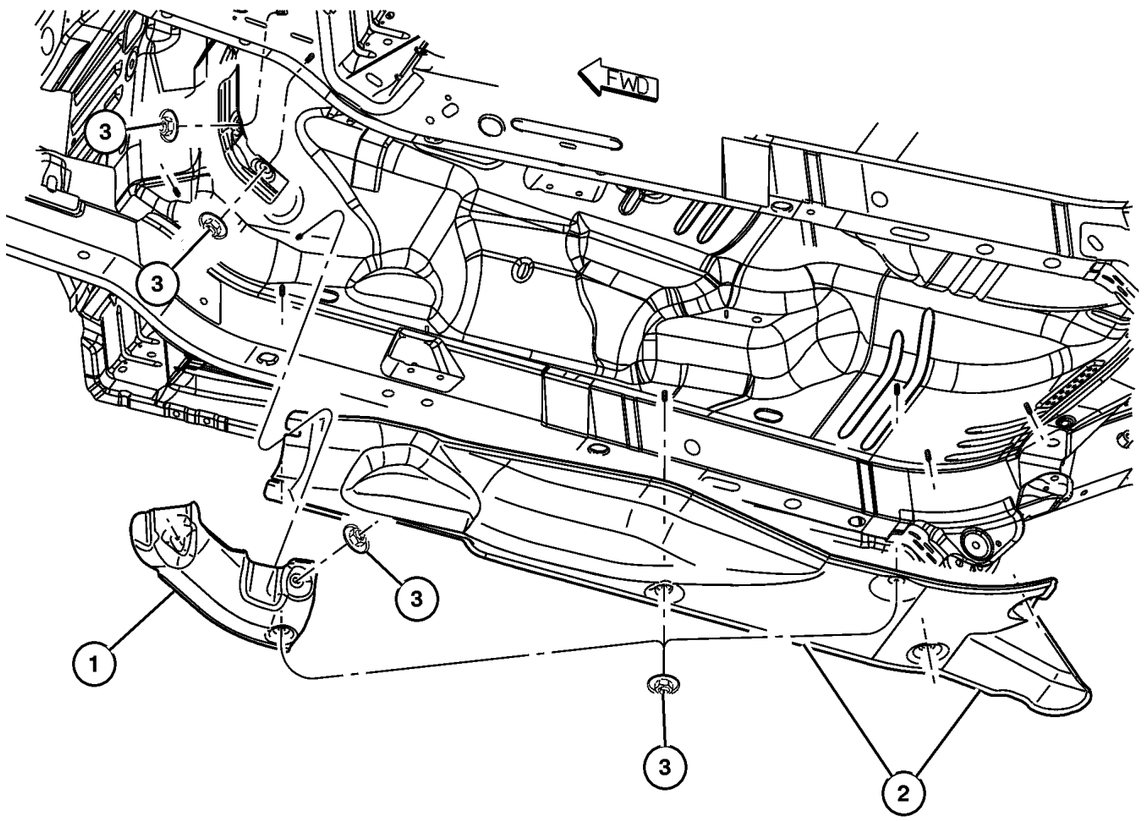

ITEM	PART NUMBER	QTY	LINE	SERIES	BODY	ENGINE	TRANS	TRIM	DESCRIPTION
1									SHIELD, Floor Pan
	55176 791AA	1							
	55360 560AC	1				EK0			
2	55176 792AD	1							SHIELD, Floor Pan
3									NUT, Heat Shield Attach, M5x1.60, (NOT SERVICED) (Not Serviced)

2006 Liberty (KJ)

SERIES	LINE	BODY	ENGINE	TRANSMISSION
H =HIGHLINE	T =JEEP - 2WD	74 =SPORT UTILITY 4-DR	EKG=3.7L V6 Eng.	DG6=4-Spd. Auto. 42RLE Trans.
M =MEDIUM	J =JEEP - 4WD		ENR=2.8L 4 Cyl Turbo Diesel Eng.	DGV=4-Spd. Auto. VLP Trans.
P =PREMIUM	U =JEEP - 4WD (RHD)		ENJ=2.5L 4 Cyl 16V Turbo Diesel Eng.	DGQ=5-Spd Auto. 5-45RFE Trans.
			ED1=2.4L 4 Cyl DOHC 16v SMPI Eng.	DEH=6-Speed Man. NSG370 Trans.
				DDD=5-Speed HD Man. Trans.
				DDK=5-Speed HD Man. Trans.

Group – 013

Frames and Bumpers

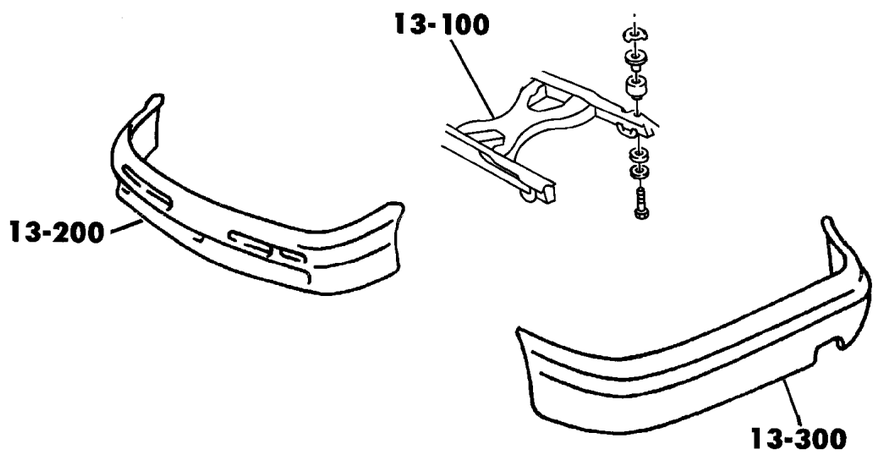

013–100	013–200	013–300	013–600
Frames	Front Bumper and Fascia	Rear Bumper and Fascia	Trailer Tow
	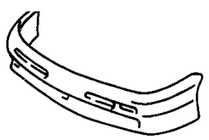		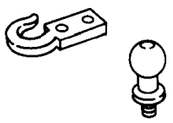

GROUP 13 - Frames and Bumpers

Illustration Title — Group-Fig. No.

Frames
Frame Cradle . . . . . Fig. 013-110

Front Bumper and Fascia
Bumper, Front . . . . . Fig. 013-210

Rear Bumper and Fascia
Bumper, Rear . . . . . Fig. 013-310
Rear License Plate Mounting - Export [TBR] . . . . . Fig. 013-320

Trailer Tow
Tow Hooks - Front . . . . . Fig. 013-610
Tow Hooks - Rear . . . . . Fig. 013-620

Frame Cradle
Figure 013-110

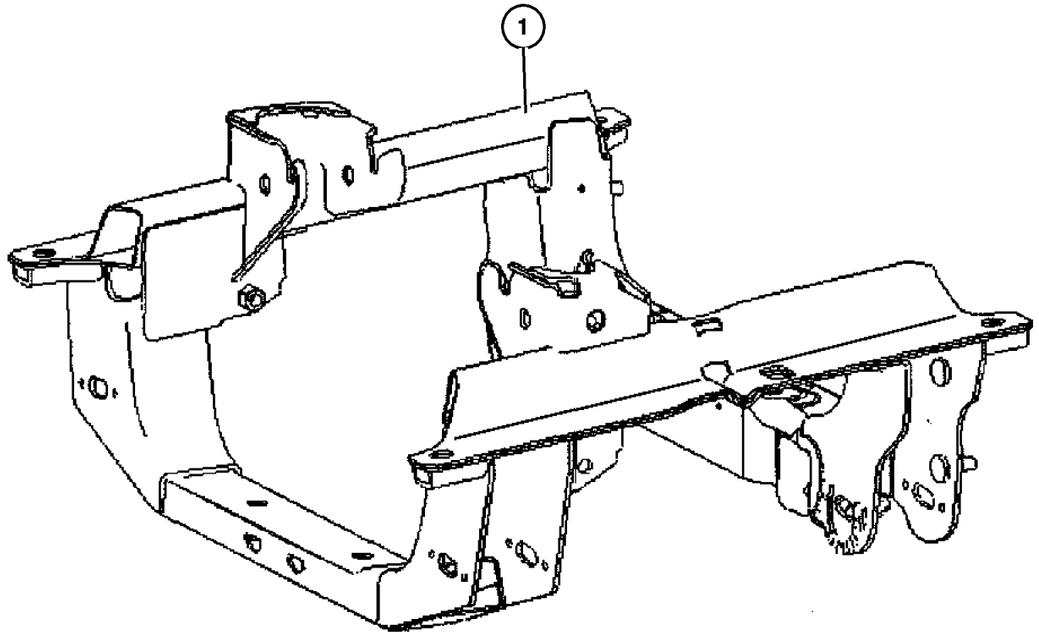

ITEM	PART NUMBER	QTY	LINE	SERIES	BODY	ENGINE	TRANS	TRIM	DESCRIPTION
Note:									
Sales Codes:									
[EK0]= All 3.7L 6 Cylinder Gas Engines									
[EN0]= 2.8L Turbo Diesel Engine									
1									CRADLE, front suspension
	52128 994AE	1							[EK0]
	52129 013AE	1	J, U						[EN0]
-2	6506 672AA-	2							SCREW AND WASHER, Hex, Front Cradle Attach
-3	6507 135AA-	2							SCREW, Rear Cradle Attach

2006 Liberty (KJ)

SERIES	LINE	BODY	ENGINE	TRANSMISSION
H =HIGHLINE	T =JEEP - 2WD	74 =SPORT UTILITY 4-DR	EKG=3.7L V6 Eng.	DG6=4-Spd. Auto. 42RLE Trans.
M =MEDIUM	J =JEEP - 4WD		ENR=2.8L 4 Cyl Turbo Diesel Eng.	DGV=4-Spd. Auto. VLP Trans.
P =PREMIUM	U =JEEP - 4WD (RHD)		ENJ=2.5L 4 Cyl 16V Turbo Diesel Eng.	DGQ=5-Spd Auto. 5-45RFE Trans.
			ED1=2.4L 4 Cyl DOHC 16v SMPI Eng.	DEH=6-Speed Man. NSG370 Trans.
				DDD=5-Speed HD Man. Trans.
				DDK=5-Speed HD Man. Trans.

Bumper, Front
Figure 013-210

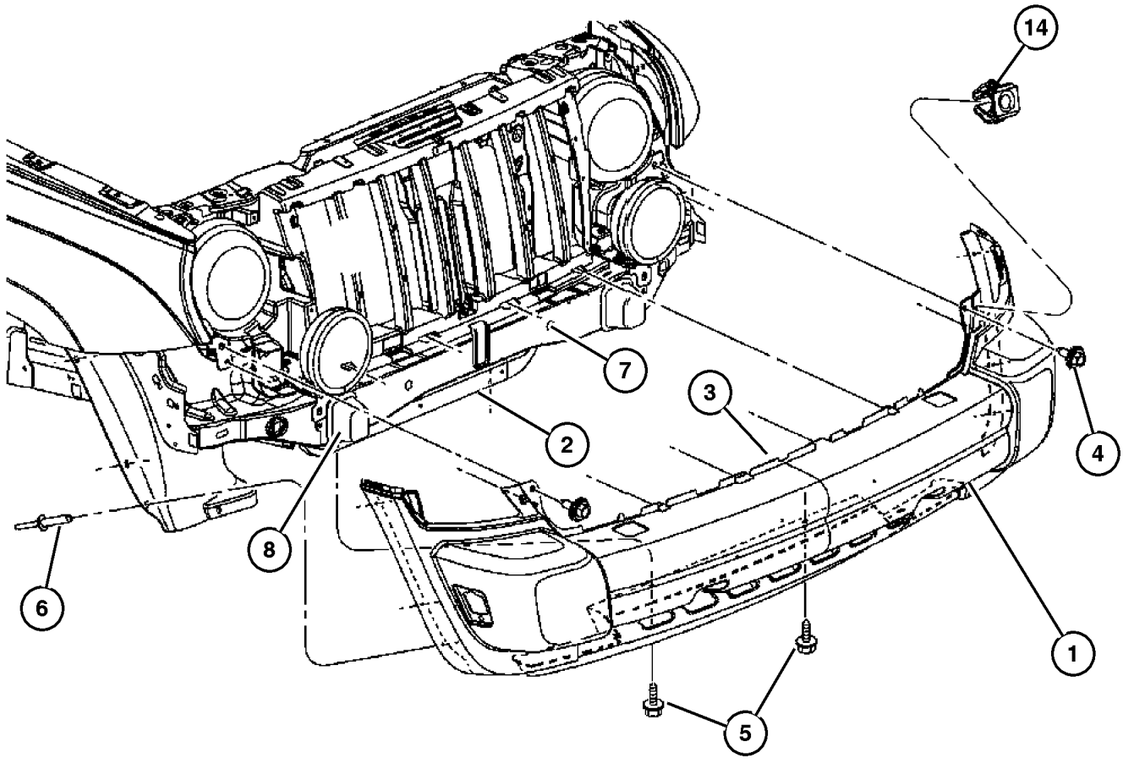

ITEM	PART NUMBER	QTY	LINE	SERIES	BODY	ENGINE	TRANS	TRIM	DESCRIPTION
Note:									
Sales Codes:									
[ABE]= Export									
[ABJ]= Japan Equipment Group									
[MDA]= Front License Plate									
[MLA]= Fascia - Body Color									
[MLC]= Fascia - Gray									
[MLS]= Fascia - Accent color									
[XEA]= Tow Hooks									
1									FASCIA, Front
	5JG89 BDLAC	1							[MLC] Without [XEA]
	5JG91 CD7AD	1							[MLS] Without [ABE] for Paint Codes [B8,GV,S2,X8]
	5JG91 CJMAD	1							[MLS] Without [ABE] for Paint Codes [JC,JT]
	5JG93 TZZAD	1							[MLA] With [XEA] Without [ABE], Service Dealer Paint
	5JJ07 TZZAD	1							[MLA] Without [XEA], Service Dealer Paint
	5JU74 BDLAC	1							[MLC] With [XEA]
	5KF18 CD7AD	1							[MLS] With [ABE] for Paint Codes [B8,GV,S2,X8]
	5KF18 CJMAD	1							[MLS] With [ABE] for Paint Codes [JC,JT]
2	55157 103AD	1							AIR DAM
3									ABSORBER, Front Energy
	55156 758AD	1							With [MLA]
	55157 098AD	1							With [MLS] Or [MLC]
4									SCREW AND WASHER, Hex Head, M6 x 1.00 x 26.5, (NOT SERVICED) (Not Serviced)
5	6505 903AA	2							SCREW AND WASHER, Self Tapping, M6x1x22
6	6506 007AA	8							RIVET
7	55360 190AH	1							CROSSMEMBER, Front Support
8	55360 410AA	2							SPACER, Jounce Bumper
-9									LICENSE PLATE KIT, Will Include Item 10 and 11
	55156 886AA-	1	J, T						With [MDA]
		1	J, U						Export [MDA] with [ABJ]
-10									SCREW
	6034 866	5	J, T						[MDA]

2006 Liberty (KJ)

SERIES	LINE	BODY	ENGINE	TRANSMISSION
H =HIGHLINE	T =JEEP - 2WD	74 =SPORT UTILITY 4-DR	EKG=3.7L V6 Eng.	DG6=4-Spd. Auto. 42RLE Trans.
M =MEDIUM	J =JEEP - 4WD		ENR=2.8L 4 Cyl Turbo Diesel Eng.	DGV=4-Spd. Auto. VLP Trans.
P =PREMIUM	U =JEEP - 4WD (RHD)		ENJ=2.5L 4 Cyl 16V Turbo Diesel Eng.	DGQ=5-Spd Auto. 5-45RFE Trans.
			ED1=2.4L 4 Cyl DOHC 16v SMPI Eng.	DEH=6-Speed Man. NSG370 Trans.
				DDD=5-Speed HD Man. Trans.
				DDK=5-Speed HD Man. Trans.

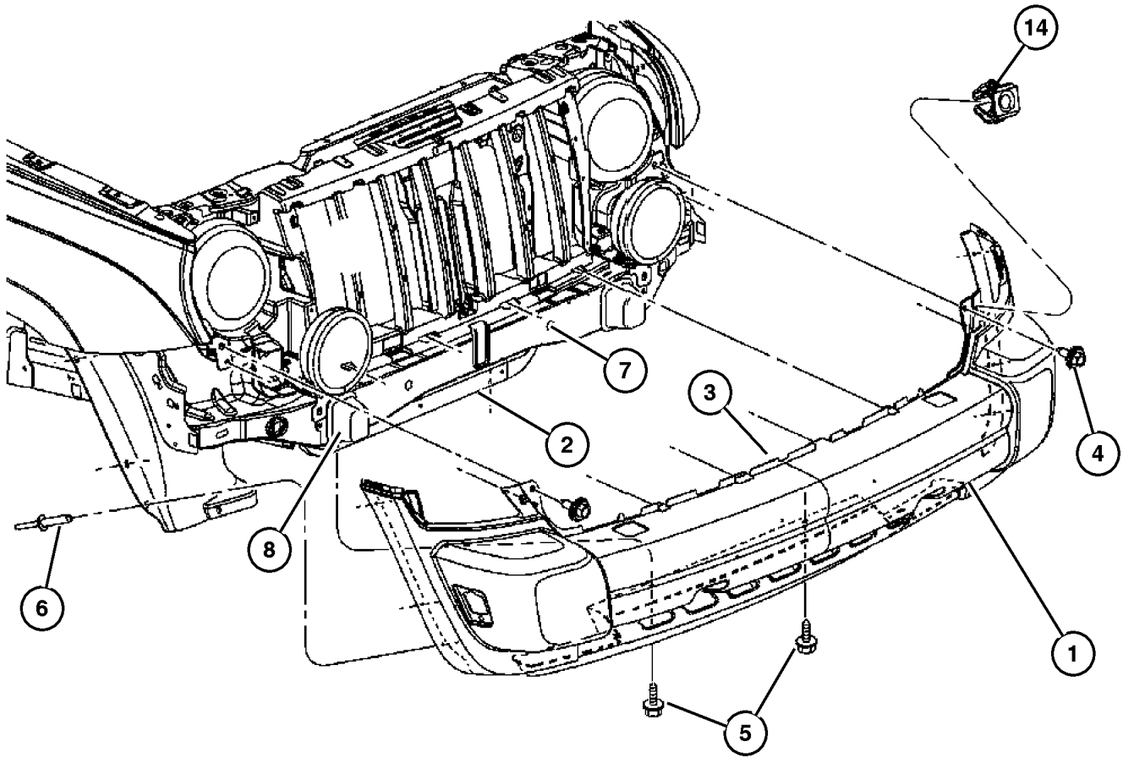

ITEM	PART NUMBER	QTY	LINE	SERIES	BODY	ENGINE	TRANS	TRIM	DESCRIPTION
		5	J, U						Export
-11									BRACKET, License Plate
	55156 887AA-	1	J, T						[MDA]
		1	J, U						Export [MDA] with [ABJ]
-12									BRACKET, License Plate
	5288 487	1							[ABJ]
	55156 890AA-	1	J, U						Export [MDA] without [ABJ]
-13	6036 001AA-	4							RIVET, Blind, .190 X 1.070, [ABJ]
14	6508 389AA	2							NUT, Snap In, Parking &Turn Signal
									Attach

2006 Liberty (KJ)

SERIES	LINE	BODY	ENGINE	TRANSMISSION
H =HIGHLINE	T =JEEP - 2WD	74 =SPORT UTILITY 4-DR	EKG=3.7L V6 Eng.	DG6=4-Spd. Auto. 42RLE Trans.
M =MEDIUM	J =JEEP - 4WD		ENR=2.8L 4 Cyl Turbo Diesel Eng.	DGV=4-Spd. Auto. VLP Trans.
P =PREMIUM	U =JEEP - 4WD (RHD)		ENJ=2.5L 4 Cyl 16V Turbo Diesel Eng.	DGQ=5-Spd Auto. 5-45RFE Trans.
			ED1=2.4L 4 Cyl DOHC 16v SMPI Eng.	DEH=6-Speed Man. NSG370 Trans.
				DDD=5-Speed HD Man. Trans.
				DDK=5-Speed HD Man. Trans.

Bumper, Rear
Figure 013-310

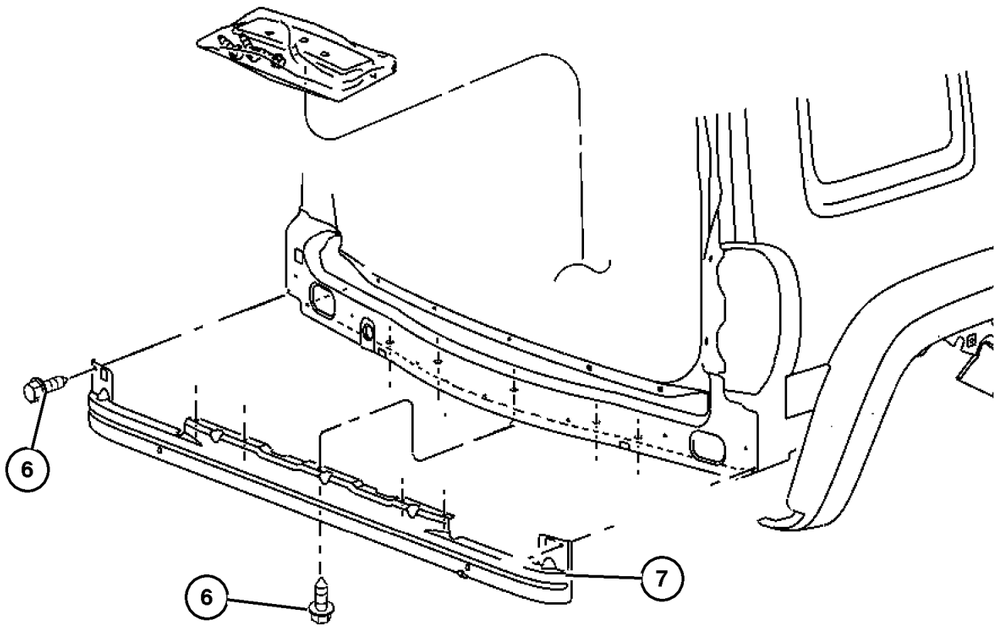

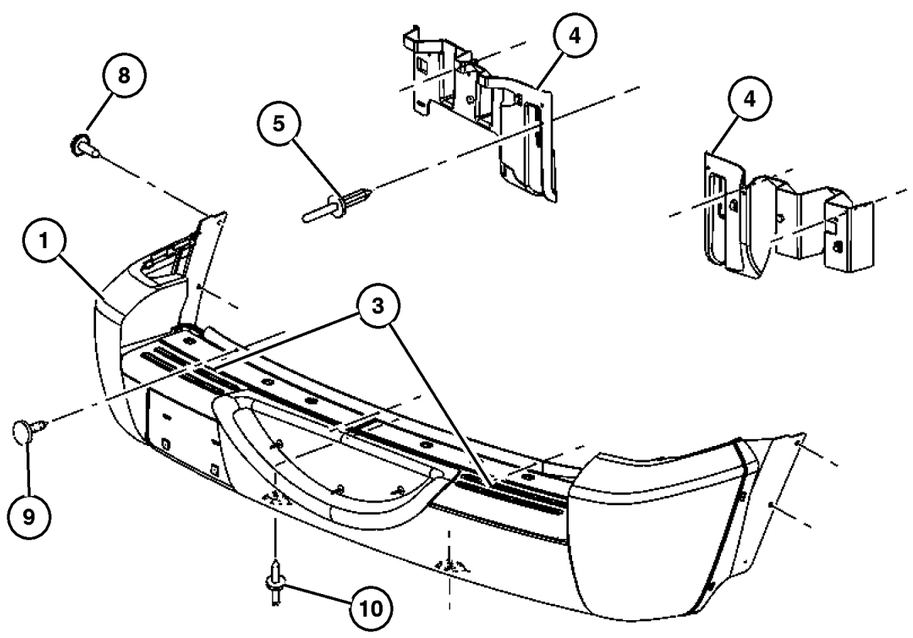

ITEM	PART NUMBER	QTY	LINE	SERIES	BODY	ENGINE	TRANS	TRIM	DESCRIPTION
NOTE : Sales Codes									
[ABE] = Export Equipment Group									
[MLA] = Fascias - Body Color									
[MLC] = Fascias - Silverstone									
1									FASCIA, Rear
	5066 317AF	1							[MLA] Witout [ABE]
	5066 328AD	1							[MLA] With [ABE]
	5GE72 BDLAD	1							[MLC] With [ABE]
	5GE72 CD7AD	1							[MLS] With [ABE] For Paint Codes [X8,S2,GV,B8]
	5GE72 CJMAD	1							[MLS] With [ABE] For Paint Codes [JT,JC]
	5GJ58 BDLAE	1							[MLC] Without [ABE]
	5GJ58 CD7AE	1							[MLS] Without [ABE] For Paint Codes [X8,S2,B8,GV]
	5GJ58 CJMAE	1							[MLS] Without [ABE] For Paint Codes [JT,JC]
-2	4399 791	2							REFLECTOR, Fascia, [ABE]
3									STEP PAD, Rear Bumper
	55155 996AC	1							Right
	55155 997AC	1							Left
4									SUPPORT, Rear Fascia
	55360 678AA	1							Right
	55360 679AA	1							Left
5									RIVET, Blind Bulb, [.25x.795], (NOT SERVICED) (Not Serviced)
6	6505 900AA	7	J, U						SCREW, Tapping Hex Flange Head, M6.3 x 1.81 x 19.00
7	55155 820AA	1	J, U						CROSSMEMBER, Bumper, Rear
8	6505 905AA	4							SCREW, Hex Head, M6x1x20
9	6504 442	3							SCREW TAPPING & WASHER, hex head, m4.2x1.70x13.45
10	6506 007AA	2							RIVET

2006 Liberty (KJ)

SERIES	LINE	BODY	ENGINE	TRANSMISSION
H =HIGHLINE	T =JEEP - 2WD	74 =SPORT UTILITY 4-DR	EKG=3.7L V6 Eng.	DG6=4-Spd. Auto. 42RLE Trans.
M =MEDIUM	J =JEEP - 4WD		ENR=2.8L 4 Cyl Turbo Diesel Eng.	DGV=4-Spd. Auto. VLP Trans.
P =PREMIUM	U =JEEP - 4WD (RHD)		ENJ=2.5L 4 Cyl 16V Turbo Diesel Eng.	DGQ=5-Spd Auto. 5-45RFE Trans.
			ED1=2.4L 4 Cyl DOHC 16v SMPI Eng.	DEH=6-Speed Man. NSG370 Trans.
				DDD=5-Speed HD Man. Trans.
				DDK=5-Speed HD Man. Trans.

Rear License Plate Mounting - Export [TBR]
Figure 013-320

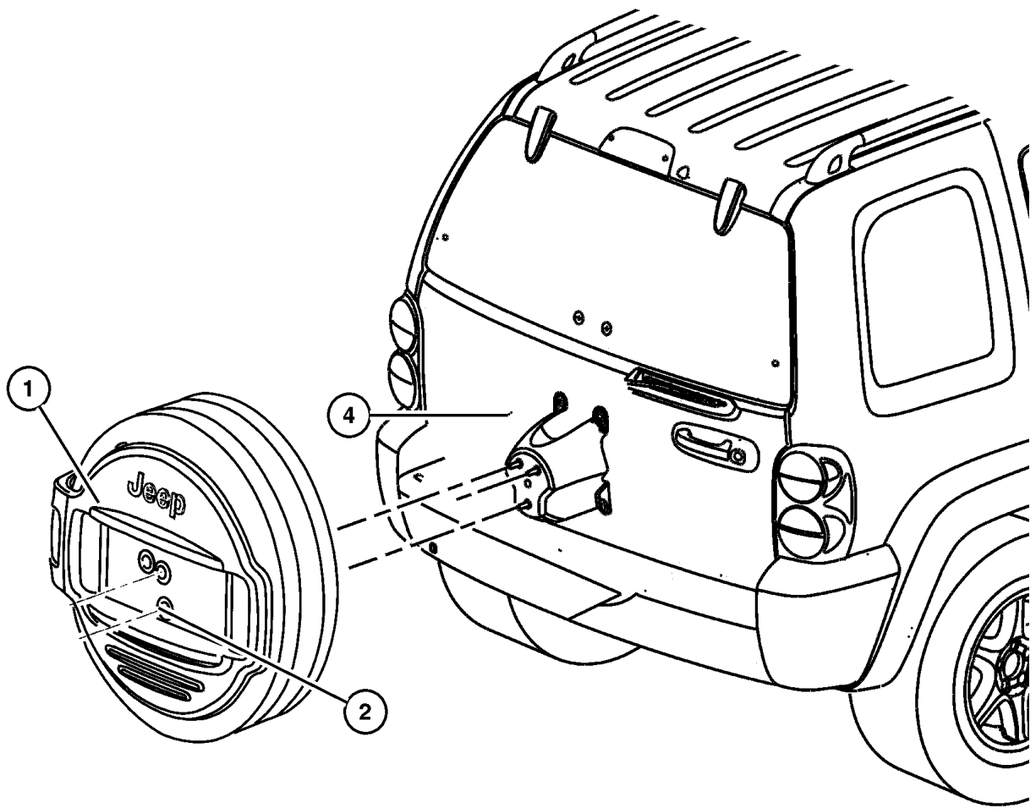

ITEM	PART NUMBER	QTY	LINE	SERIES	BODY	ENGINE	TRANS	TRIM	DESCRIPTION
Note:									
Sale Codes:									
[TBR]= Outside Tire Carrier									
1									BRACKET, License Plate
	5HF06 RXFAK	1	J, U	H, P					
		1	J, U	M					
2	6506 429AA	2	J, U						SCREW, M8x1.25x21
-3	6036 303AA-	2	J, U						NUT, .50-20, Used Between the Tire and the Bracket
4	6035 201	1	J, U						RIVET

2006 Liberty (KJ)

SERIES	LINE	BODY	ENGINE	TRANSMISSION
H =HIGHLINE	T =JEEP - 2WD	74 =SPORT UTILITY 4-DR	EKG=3.7L V6 Eng.	DG6=4-Spd. Auto. 42RLE Trans.
M =MEDIUM	J =JEEP - 4WD		ENR=2.8L 4 Cyl Turbo Diesel Eng.	DGV=4-Spd. Auto. VLP Trans.
P =PREMIUM	U =JEEP - 4WD (RHD)		ENJ=2.5L 4 Cyl 16V Turbo Diesel Eng.	DGQ=5-Spd Auto. 5-45RFE Trans.
			ED1=2.4L 4 Cyl DOHC 16v SMPI Eng.	DEH=6-Speed Man. NSG370 Trans.
				DDD=5-Speed HD Man. Trans.
				DDK=5-Speed HD Man. Trans.

Tow Hooks - Front
Figure 013-610

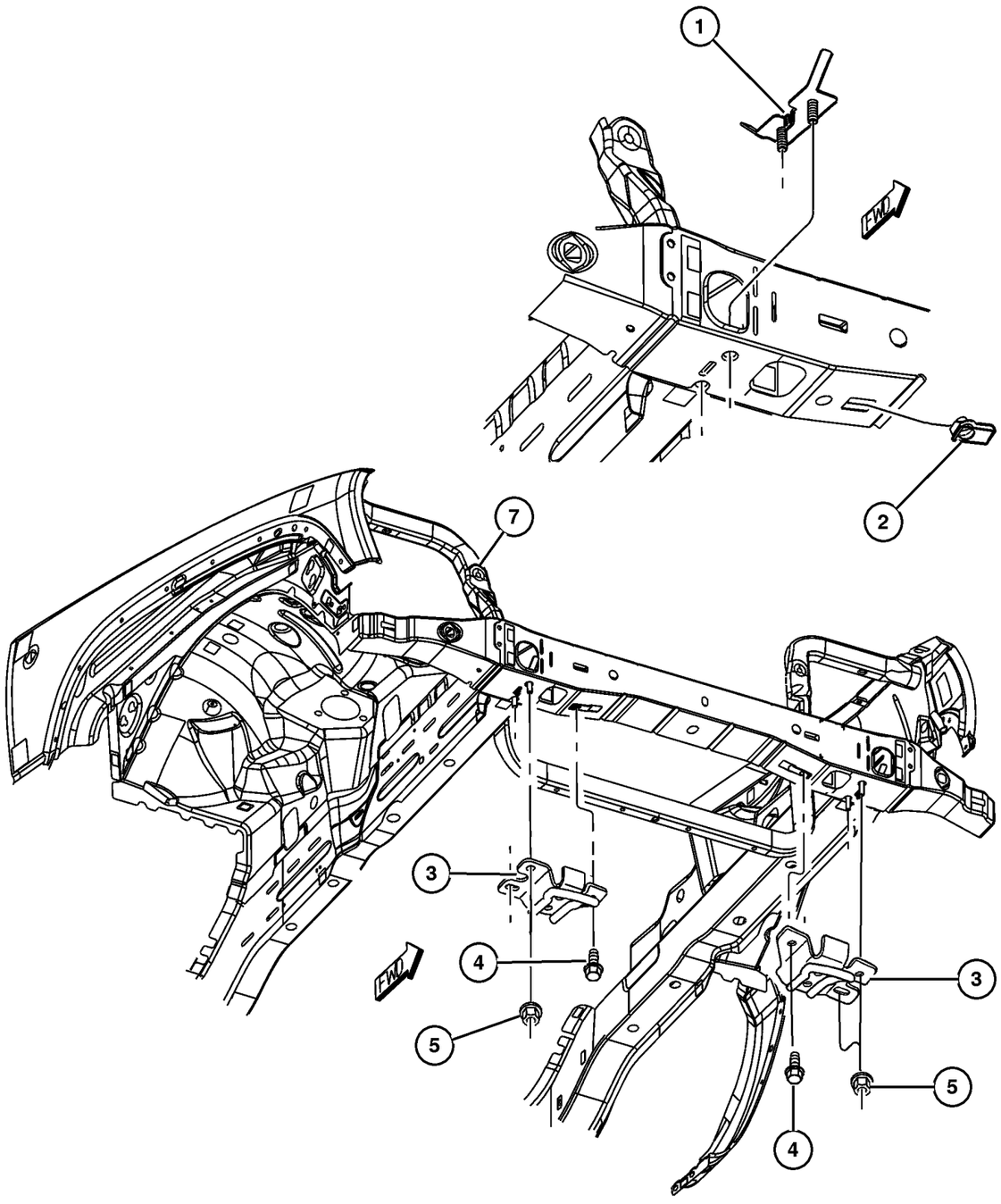

ITEM	PART NUMBER	QTY	LINE	SERIES	BODY	ENGINE	TRANS	TRIM	DESCRIPTION
1	52059 352AB	2							STUD PLATE
2	6504 818AA	1							NUT, M10x1.50
3	52059 353AA	1							EYE, Tow
4	6503 699	8							SCREW AND WASHER, Hex Head, M10x1.5x28
5	6504 818AA	1							NUT, M10x1.50
-6									HOOK, Tow
	52059 236AB-	1							Right
	52059 237AB-	1							Left
7	55176 756AE	1							SUPPORT, Radiator

2006 Liberty (KJ)

SERIES	LINE	BODY	ENGINE	TRANSMISSION
H =HIGHLINE	T =JEEP - 2WD	74 =SPORT UTILITY 4-DR	EKG=3.7L V6 Eng.	DG6=4-Spd. Auto. 42RLE Trans.
M =MEDIUM	J =JEEP - 4WD		ENR=2.8L 4 Cyl Turbo Diesel Eng.	DGV=4-Spd. Auto. VLP Trans.
P =PREMIUM	U =JEEP - 4WD (RHD)		ENJ=2.5L 4 Cyl 16V Turbo Diesel Eng.	DGQ=5-Spd Auto. 5-45RFE Trans.
			ED1=2.4L 4 Cyl DOHC 16v SMPI Eng.	DEH=6-Speed Man. NSG370 Trans.
				DDD=5-Speed HD Man. Trans.
				DDK=5-Speed HD Man. Trans.

Tow Hooks - Rear
Figure 013-620

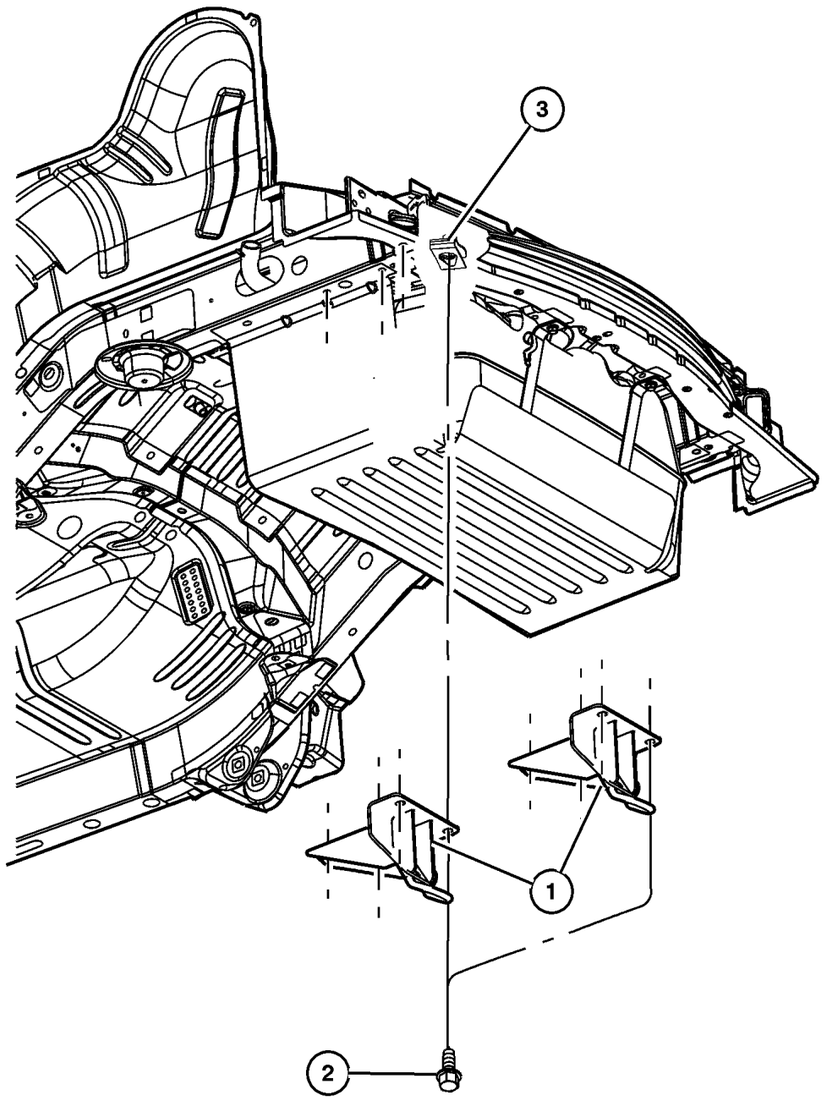

ITEM	PART NUMBER	QTY	LINE	SERIES	BODY	ENGINE	TRANS	TRIM	DESCRIPTION
1									HOOK, Tow
	52059 233AB	1							Hook
	52059 360AA	1							Eye
2	6502 557	6							BOLT, Hex Flange Head, M12x1. 75x40
3	6504 565	1							NUT, U Multi Thread
-4	52059 224AC-	1							HITCH, Trailer

2006 Liberty (KJ)

SERIES	LINE	BODY	ENGINE	TRANSMISSION
H =HIGHLINE	T =JEEP - 2WD	74 =SPORT UTILITY 4-DR	EKG=3.7L V6 Eng.	DG6=4-Spd. Auto. 42RLE Trans.
M =MEDIUM	J =JEEP - 4WD		ENR=2.8L 4 Cyl Turbo Diesel Eng.	DGV=4-Spd. Auto. VLP Trans.
P =PREMIUM	U =JEEP - 4WD (RHD)		ENJ=2.5L 4 Cyl 16V Turbo Diesel Eng.	DGQ=5-Spd Auto. 5-45RFE Trans.
			ED1=2.4L 4 Cyl DOHC 16v SMPI Eng.	DEH=6-Speed Man. NSG370 Trans.
				DDD=5-Speed HD Man. Trans.
				DDK=5-Speed HD Man. Trans.

Group – 014
Fuel

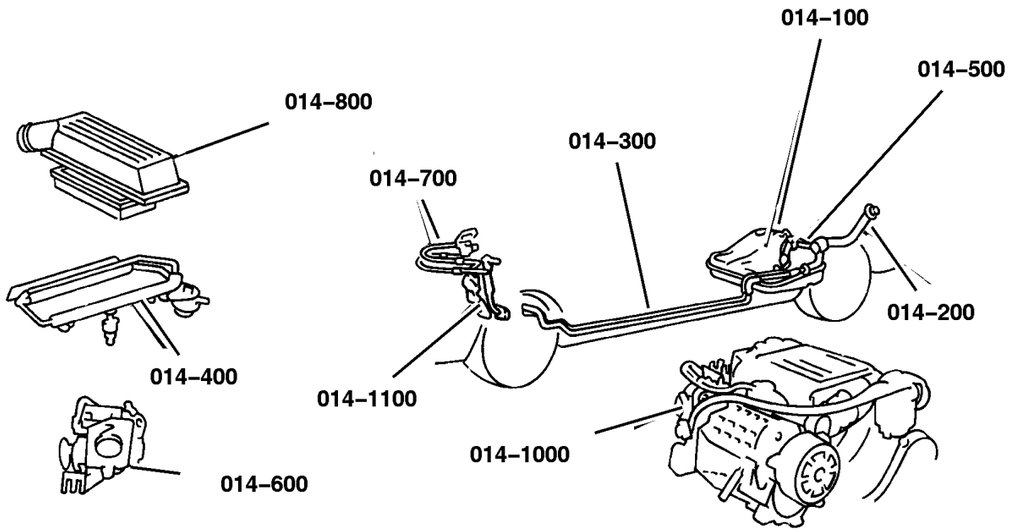

014–100 Tank, Fuel 	**014–200** Fuel Tank Filler Tube 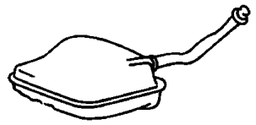	**014–300** Fuel Lines 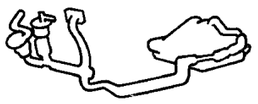	**014–400** Fuel Rail 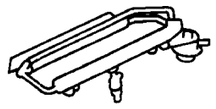
014–500 Fuel Pump and Sending Unit 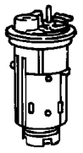	**014–600** Throttle Body 	**014–700** Throttle Controls 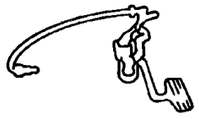	**014–800** Air Cleaner 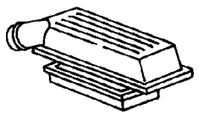

Group – 014
Fuel

014–1000 Speed Control 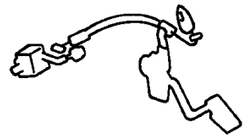	**014–1100** Accelerator Pedal 		

GROUP 14 - Fuel

Illustration Title	Group-Fig. No.
Tank, Fuel	
Tank, Fuel, All Engines	Fig. 014-110
Fuel Tank Filler Tube	
Fuel Tank Filler Tube, All Engines	Fig. 014-210
Fuel Lines	
Fuel Lines Front 3.7L EK0]	Fig. 014-320
Fuel Lines Rear 3.7L [EK0]	Fig. 014-325
Fuel Lines Chassis 2.8L [EN0]	Fig. 014-330
Fuel Filter And Water Separator 2.8L EN0]	Fig. 014-340
Fuel Rail	
Fuel Rail 3.7L EKG]	Fig. 014-415
Fuel Injection System 2.8L [EN0]	Fig. 014-420
Fuel Injection Pump 2.8L [EN0]	Fig. 014-430
Fuel Injection Pump Mounting	Fig. 014-435
Fuel Pump and Sending Unit	
Fuel Pump and Sending Unit, 3.7L [EK0] 2.8L [EN0]	Fig. 014-510
Throttle Body	
Throttle Body, 3.7, [EK0]	Fig. 014-610
Turbocharger 2.8L [EN0]	Fig. 014-620
Electric turbo Modulator	Fig. 014-630
Throttle Controls	
Throttle Controls, 3.7L [EK0]	Fig. 014-720
Air Cleaner	
Air Cleaner, 3.7L [EK0]	Fig. 014-820
Air Cleaner, 2.8L [EN0]	Fig. 014-830
Speed Control	
Speed Control	Fig. 014-1010
Accelerator Pedal	
Accelerator Pedal	Fig. 014-1110

Tank, Fuel, All Engines
Figure 014-110

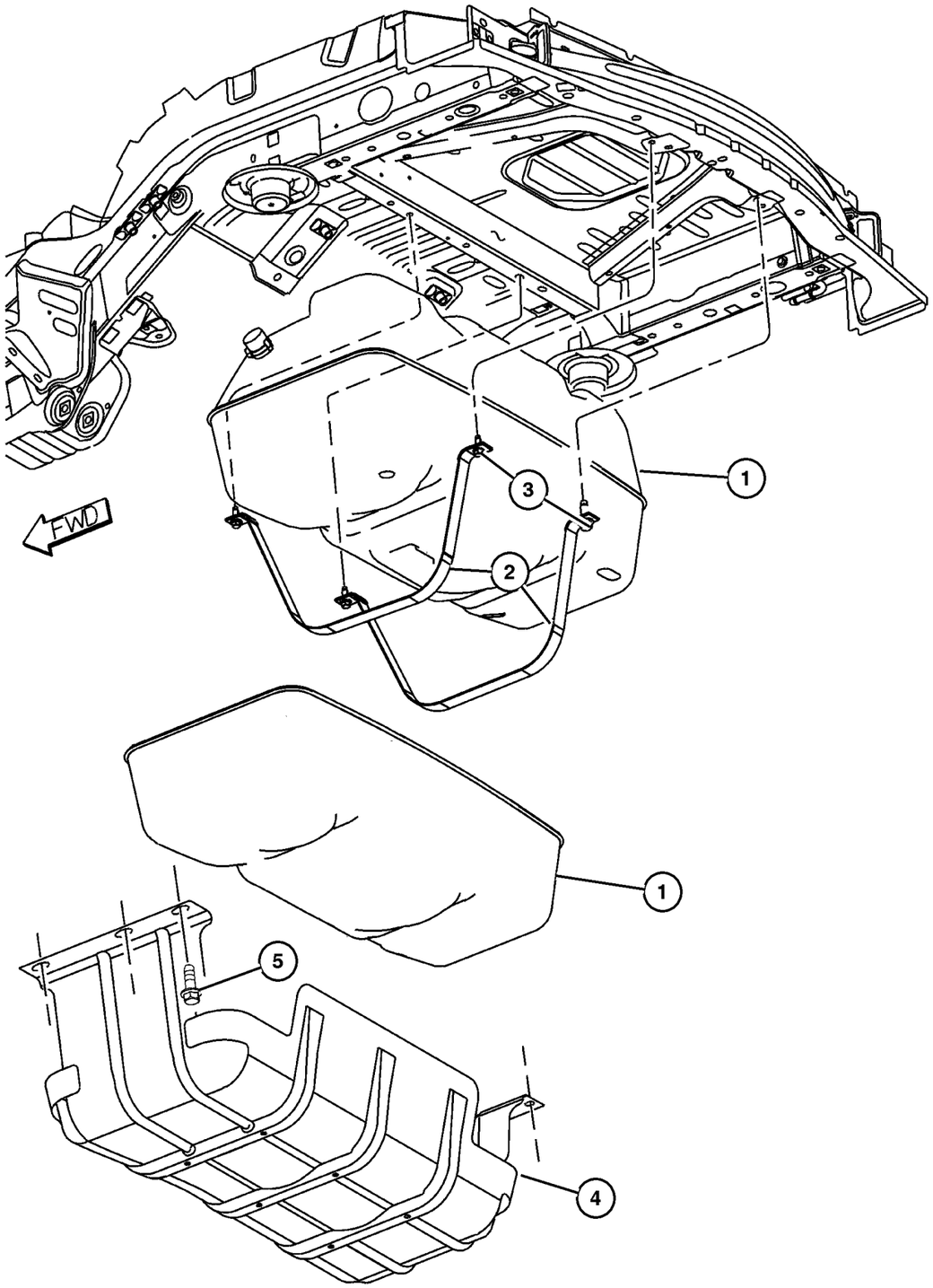

ITEM	PART NUMBER	QTY	LINE	SERIES	BODY	ENGINE	TRANS	TRIM	DESCRIPTION
Note; Sales Codes									
[EK0]= All 3.7L 6 Cylinder Gas Engines									
[ENR]= All 2.8L 4 Cylinder Turbo Diesel Engine									
[XEE]=Skid Plate Shield, Fuel Tank									
1									TANK, Fuel - Plastic
	52128 911AG	1				ED0, EK0			
	52128 922AF	1				EN0			
2	52100 334AG	2							STRAP, Fuel Tank
3	6503 183	4							SCREW, Hex Head, M10x1.5x30
4	52100 332AH	1							PLATE, Skid, [XEE]
5	6502 557	1		H, P	74				BOLT, Hex Flange Head, M12x1.75x40
-6	52129 238AA-	1				EN0			FILTER, Fuel
-7	6505 775AA-	2				EN0			CLAMP, Hose

2006 Liberty (KJ)

SERIES	LINE	BODY	ENGINE	TRANSMISSION
H =HIGHLINE	T =JEEP - 2WD	74 =SPORT UTILITY 4-DR	EKG=3.7L V6 Eng.	DG6=4-Spd. Auto. 42RLE Trans.
M =MEDIUM	J =JEEP - 4WD		ENR=2.8L 4 Cyl Turbo Diesel Eng.	DGV=4-Spd. Auto. VLP Trans.
P =PREMIUM	U =JEEP - 4WD (RHD)		ENJ=2.5L 4 Cyl 16V Turbo Diesel Eng.	DGQ=5-Spd Auto. 5-45RFE Trans.
			ED1=2.4L 4 Cyl DOHC 16v SMPI Eng.	DEH=6-Speed Man. NSG370 Trans.
				DDD=5-Speed HD Man. Trans.
				DDK=5-Speed HD Man. Trans.

AR = Use as required - = Non illustrated part # = New this model year

Fuel Tank Filler Tube, All Engines
Figure 014-210

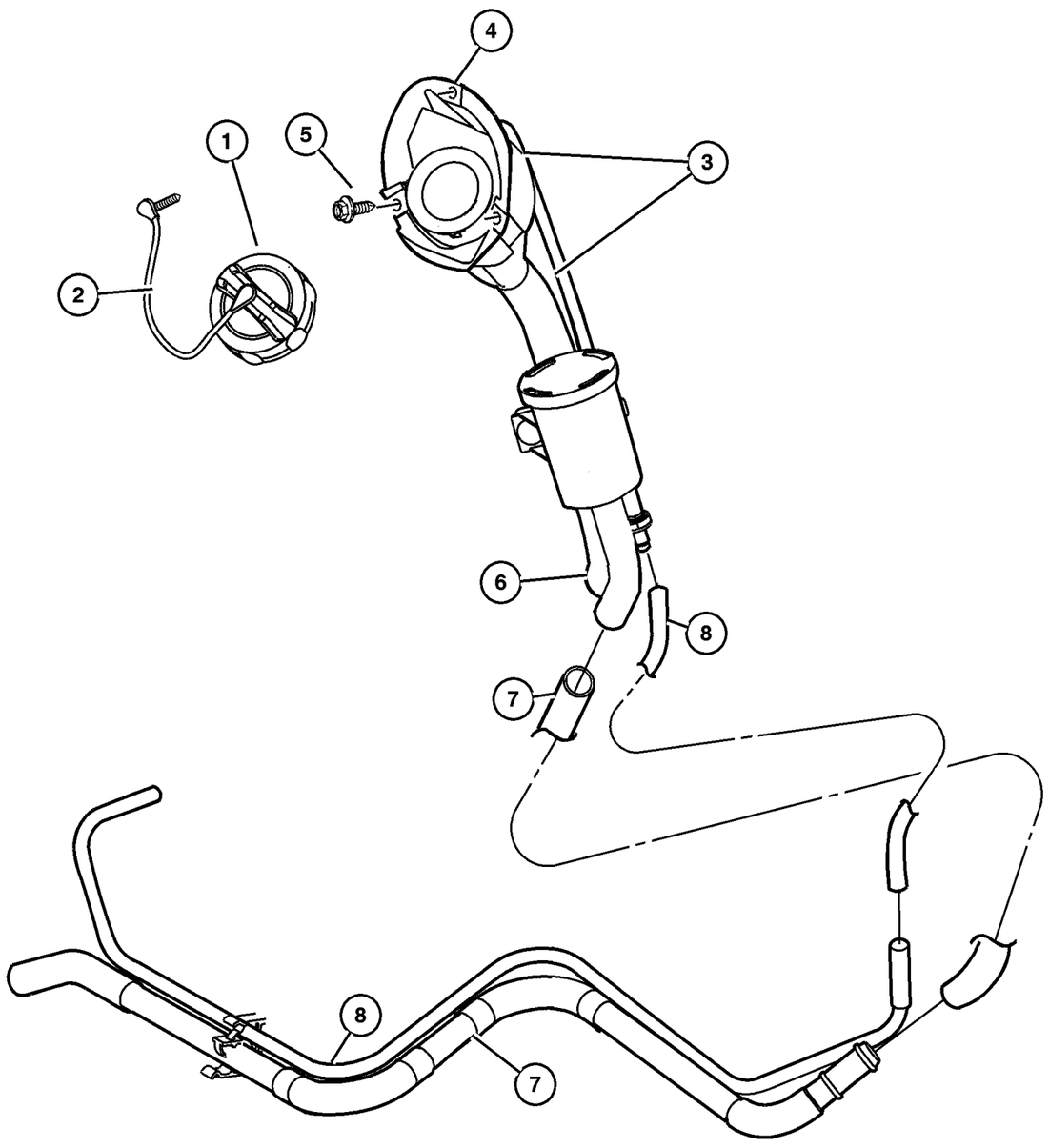

ITEM	PART NUMBER	QTY	LINE	SERIES	BODY	ENGINE	TRANS	TRIM	DESCRIPTION
Note; Sales Codes									
[EK0]= All 3.7L 6 Cylinder Gas Engines									
[EN0]= All 2.5L Turbo Diesels									
1									CAP, Fuel Filler
	52102 464AC	1				ED0, EK0			
	52129 371AA	1				EN0			
2	4682 676	1							TETHER, Fuel Filler Cap
3									TUBE, Fuel Filler
	52129 234AB	1				ED0, EK0			
	52129 235AB	1				EN0			
4	55360 619AC	1							SLEEVE, Fuel Filler
5	6035 204	3							SCREW, Tapping, .19-16x.75
6									HOSE, Fuel Filler
	52129 236AB	1				ED0, EK0			
		1				EN0			
7									TUBE, Fuel, Serviced With Fuel Flow Valve, (NOT SERVICED) (Not Serviced)
8	52128 631AC	1				ED0, EK0			TUBE, Vapor

2006 Liberty (KJ)

SERIES	LINE	BODY	ENGINE	TRANSMISSION
H =HIGHLINE	T =JEEP - 2WD	74 =SPORT UTILITY 4-DR	EKG=3.7L V6 Eng.	DG6=4-Spd. Auto. 42RLE Trans.
M =MEDIUM	J =JEEP - 4WD		ENR=2.8L 4 Cyl Turbo Diesel Eng.	DGV=4-Spd. Auto. VLP Trans.
P =PREMIUM	U =JEEP - 4WD (RHD)		ENJ=2.5L 4 Cyl 16V Turbo Diesel Eng.	DGQ=5-Spd Auto. 5-45RFE Trans.
			ED1=2.4L 4 Cyl DOHC 16v SMPI Eng.	DEH=6-Speed Man. NSG370 Trans.
				DDD=5-Speed HD Man. Trans.
				DDK=5-Speed HD Man. Trans.

Fuel Lines Front 3.7L EK0]
Figure 014-320

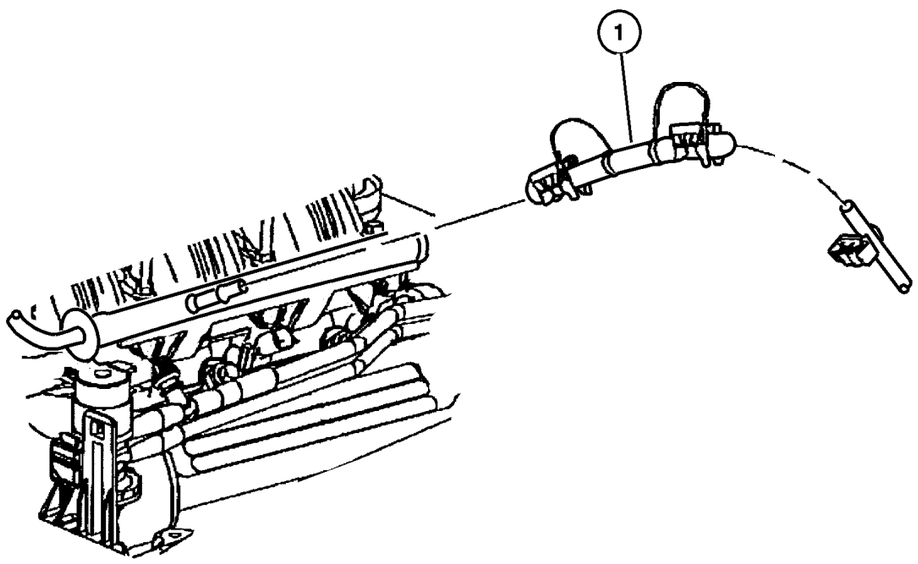

ITEM	PART NUMBER	QTY	LINE	SERIES	BODY	ENGINE	TRANS	TRIM	DESCRIPTION
Note; Sales Codes									
[EK0]= All 3.7L 6 Cylinder Gas Engines									
1	52100 320AC	1				EK0			BUNDLE, Fuel Line

2006 Liberty (KJ)

SERIES	LINE	BODY	ENGINE	TRANSMISSION
H =HIGHLINE	T =JEEP - 2WD	74 =SPORT UTILITY 4-DR	EKG=3.7L V6 Eng.	DG6=4-Spd. Auto. 42RLE Trans.
M =MEDIUM	J =JEEP - 4WD		ENR=2.8L 4 Cyl Turbo Diesel Eng.	DGV=4-Spd. Auto. VLP Trans.
P =PREMIUM	U =JEEP - 4WD (RHD)		ENJ=2.5L 4 Cyl 16V Turbo Diesel Eng.	DGQ=5-Spd Auto. 5-45RFE Trans.
			ED1=2.4L 4 Cyl DOHC 16v SMPI Eng.	DEH=6-Speed Man. NSG370 Trans.
				DDD=5-Speed HD Man. Trans.
				DDK=5-Speed HD Man. Trans.

Fuel Lines Rear 3.7L [EK0]
Figure 014-325

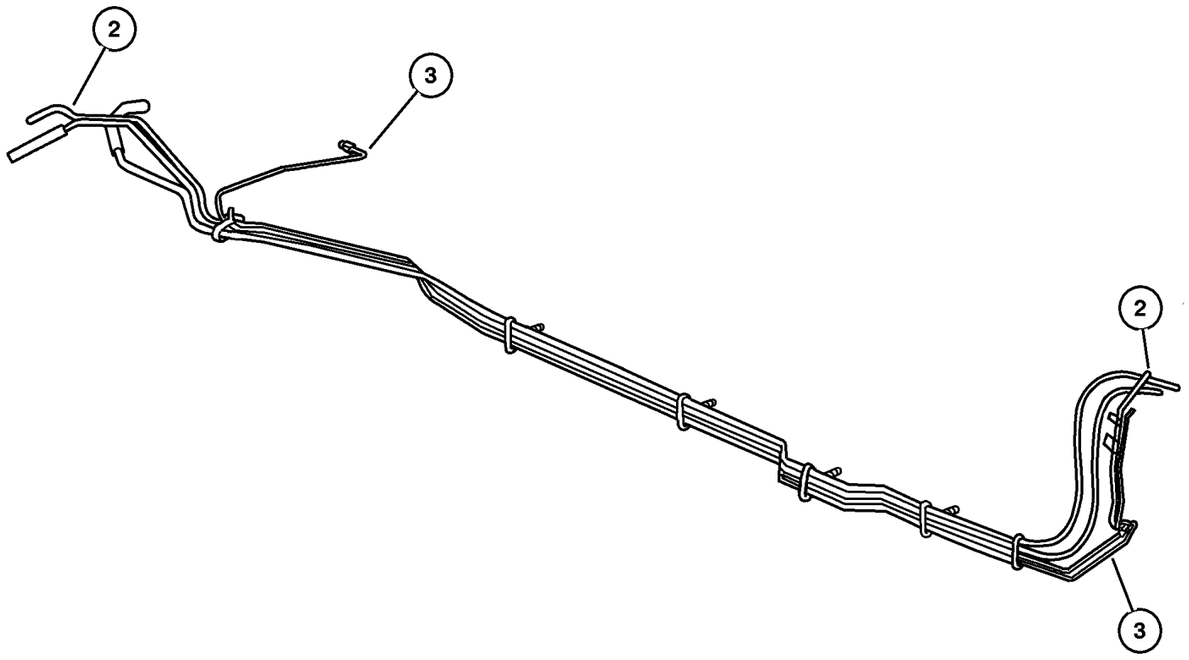

ITEM	PART NUMBER	QTY	LINE	SERIES	BODY	ENGINE	TRANS	TRIM	DESCRIPTION
Note; Sales Codes =[EK0]= All 3.7L 6 Cylinder Gas Engines									
-1	52129 255AB-	1				EK0			BUNDLE, fuel and brake lines
2	52128 976AC	1				EK0			TUBE, Fuel Supply from Pump
3									TUBE, Brake, See Brake Group, (NOT SERVICED) (Not Serviced)

2006 Liberty (KJ)

SERIES	LINE	BODY	ENGINE	TRANSMISSION
H =HIGHLINE	T =JEEP - 2WD	74 =SPORT UTILITY 4-DR	EKG=3.7L V6 Eng.	DG6=4-Spd. Auto. 42RLE Trans.
M =MEDIUM	J =JEEP - 4WD		ENR=2.8L 4 Cyl Turbo Diesel Eng.	DGV=4-Spd. Auto. VLP Trans.
P =PREMIUM	U =JEEP - 4WD (RHD)		ENJ=2.5L 4 Cyl 16V Turbo Diesel Eng.	DGQ=5-Spd Auto. 5-45RFE Trans.
			ED1=2.4L 4 Cyl DOHC 16v SMPI Eng.	DEH=6-Speed Man. NSG370 Trans.
				DDD=5-Speed HD Man. Trans.
				DDK=5-Speed HD Man. Trans.

Fuel Lines Chassis 2.8L [EN0]
Figure 014-330

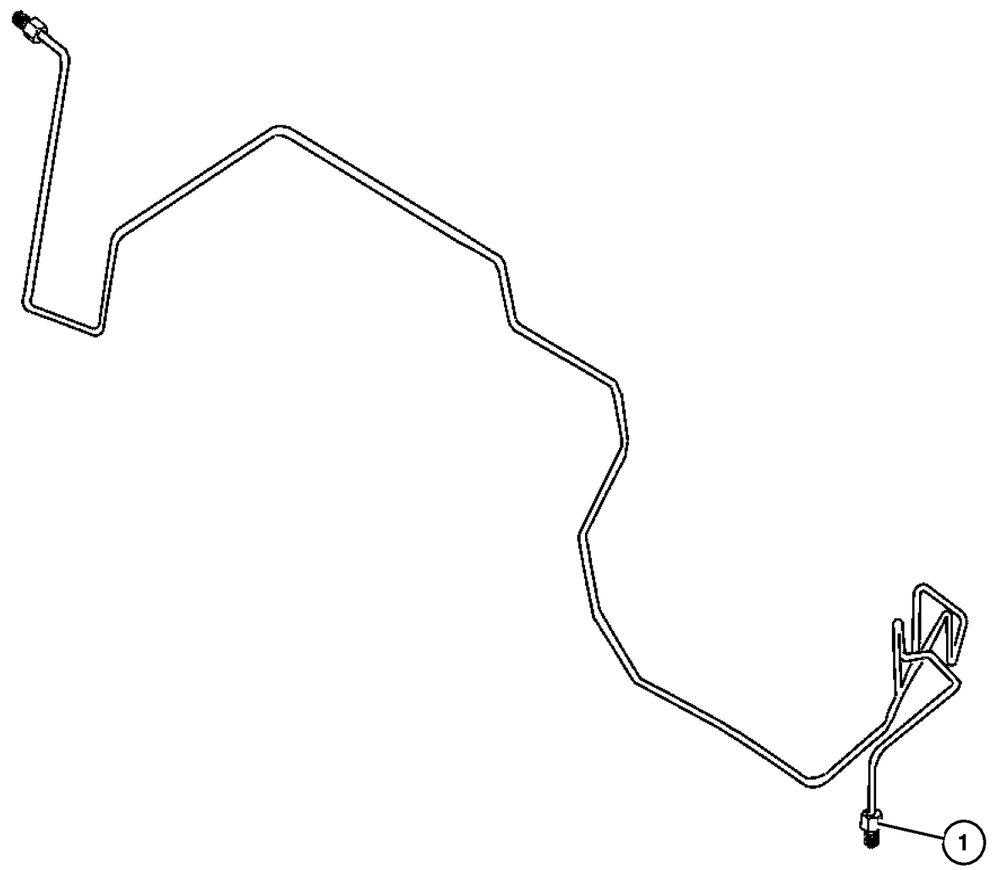

ITEM	PART NUMBER	QTY	LINE	SERIES	BODY	ENGINE	TRANS	TRIM	DESCRIPTION
Note; Sales Codes									
[EN0]= All 4/5 Cylinder Turbo Diesels									
1	52129 326AB	1				EN0			BUNDLE, fuel and brake lines
-2									CLIP, 4 Way, Fuel Bundle
	5103 501AA-	3				EN0			4-Way w/ Xmas Clip
	5103 503AA-	1				EN0			
-3	5179 788AA-	1				EN0			CLIP, 3 Way, Fuel Bundle
-4	5179 789AA-	5				EN0			CLIP, 2 Way, Fuel Bundle
-5	5179 790AA-	2				EN0			GROMMET

2006 Liberty (KJ)

SERIES	LINE	BODY	ENGINE	TRANSMISSION
H =HIGHLINE	T =JEEP - 2WD	74 =SPORT UTILITY 4-DR	EKG=3.7L V6 Eng.	DG6=4-Spd. Auto. 42RLE Trans.
M =MEDIUM	J =JEEP - 4WD		ENR=2.8L 4 Cyl Turbo Diesel Eng.	DGV=4-Spd. Auto. VLP Trans.
P =PREMIUM	U =JEEP - 4WD (RHD)		ENJ=2.5L 4 Cyl 16V Turbo Diesel Eng.	DGQ=5-Spd Auto. 5-45RFE Trans.
			ED1=2.4L 4 Cyl DOHC 16v SMPI Eng.	DEH=6-Speed Man. NSG370 Trans.
				DDD=5-Speed HD Man. Trans.
				DDK=5-Speed HD Man. Trans.

Fuel Filter And Water Separator 2.8L EN0]
Figure 014-340

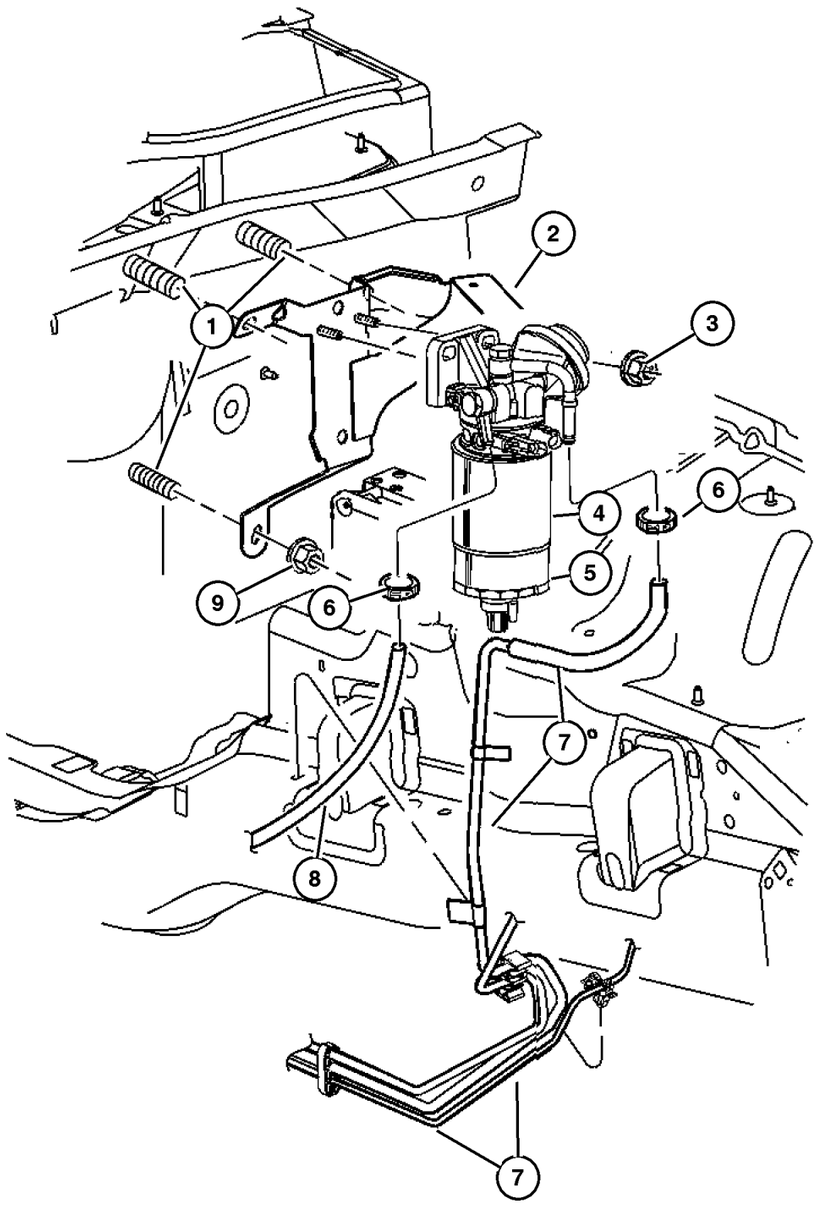

ITEM	PART NUMBER	QTY	LINE	SERIES	BODY	ENGINE	TRANS	TRIM	DESCRIPTION
Note; Sales Codes									
[EN0]= All 4/5 Cylinder Turbo Diesels									
1									STUD, (NOT SERVICED) (Not Serviced)
2	52128 947AB	1				EN0			BRACKET, Fuel Filter
3	6502 756	2				EN0			NUT, Hex Lock, M8x1.25
4	52129 237AA	1				EN0			FILTER, Fuel/Water Separator
5	52129 238AA	1				EN0			FILTER, Fuel
6	6505 775AA	2				EN0			CLAMP, Hose
7									BUNDLE, Fuel Line, Service with Fuel Bundle, (NOT REQUIRED)
8	52129 229AC	1				EN0			HOSE, Fuel
9									NUT, (NOT SERVICED) (Not Serviced)

2006 Liberty (KJ)

SERIES	LINE	BODY	ENGINE	TRANSMISSION
H =HIGHLINE	T =JEEP - 2WD	74 =SPORT UTILITY 4-DR	EKG=3.7L V6 Eng.	DG6=4-Spd. Auto. 42RLE Trans.
M =MEDIUM	J =JEEP - 4WD		ENR=2.8L 4 Cyl Turbo Diesel Eng.	DGV=4-Spd. Auto. VLP Trans.
P =PREMIUM	U =JEEP - 4WD (RHD)		ENJ=2.5L 4 Cyl 16V Turbo Diesel Eng.	DGQ=5-Spd Auto. 5-45RFE Trans.
			ED1=2.4L 4 Cyl DOHC 16v SMPI Eng.	DEH=6-Speed Man. NSG370 Trans.
				DDD=5-Speed HD Man. Trans.
				DDK=5-Speed HD Man. Trans.

Fuel Rail 3.7L EKG]
Figure 014-415

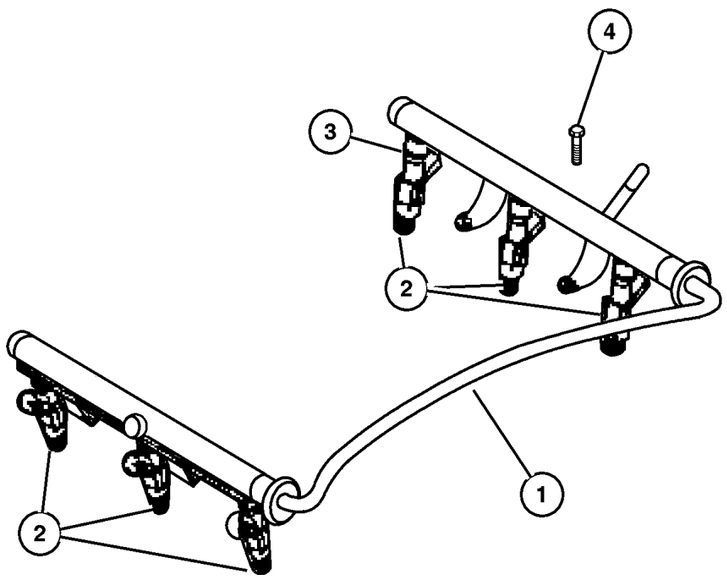

ITEM	PART NUMBER	QTY	LINE	SERIES	BODY	ENGINE	TRANS	TRIM	DESCRIPTION
Note; Sales Codes									
[EK0]= All 3.7L 6 Cylinder Gas Engines									
1	53031 102AB	1				EK0			RAIL, Fuel
2	53032 701AA	6				EK0			INJECTOR, Fuel
3	4418 257AB	6				EK0			CLIP, Fuel Injector
4	6505 504AA	4				EK0			SCREW

2006 Liberty (KJ)

SERIES	LINE	BODY	ENGINE	TRANSMISSION
H =HIGHLINE	T =JEEP - 2WD	74 =SPORT UTILITY 4-DR	EKG=3.7L V6 Eng.	DG6=4-Spd. Auto. 42RLE Trans.
M =MEDIUM	J =JEEP - 4WD		ENR=2.8L 4 Cyl Turbo Diesel Eng.	DGV=4-Spd. Auto. VLP Trans.
P =PREMIUM	U =JEEP - 4WD (RHD)		ENJ=2.5L 4 Cyl 16V Turbo Diesel Eng.	DGQ=5-Spd Auto. 5-45RFE Trans.
			ED1=2.4L 4 Cyl DOHC 16v SMPI Eng.	DEH=6-Speed Man. NSG370 Trans.
				DDD=5-Speed HD Man. Trans.
				DDK=5-Speed HD Man. Trans.

Fuel Injection System 2.8L [EN0]
Figure 014-420

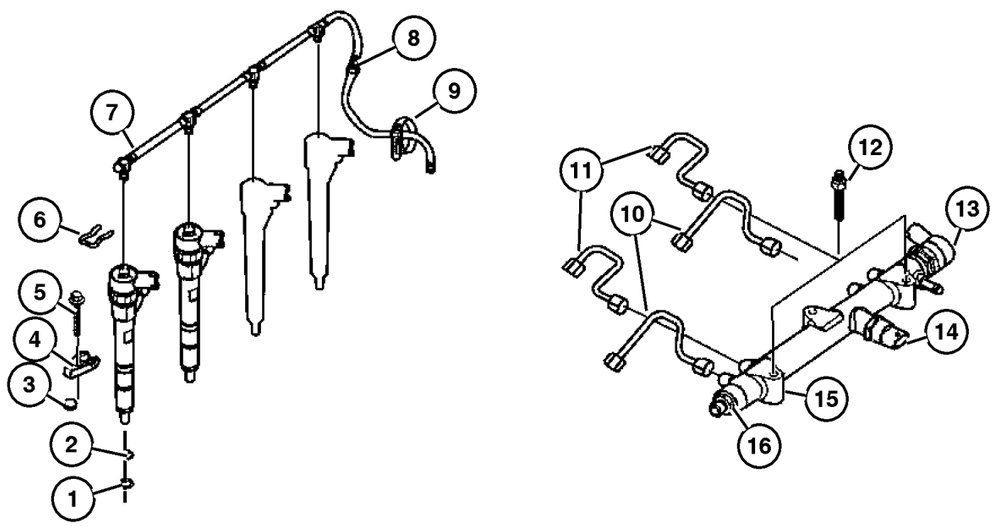

ITEM	PART NUMBER	QTY	LINE	SERIES	BODY	ENGINE	TRANS	TRIM	DESCRIPTION
1									O RING
	5069 135AB	4				EN0	DG0		
		4				EN0	DBB		
2									O RING, Fuel Injector
	5072 722AA	4				EN0	DG0		
		4				EN0	DBB		
3									PLATE
	5093 922AA	4				EN0	DG0		
		4				EN0	DBB		
4									CLAMP
	5142 793AA	4				EN0	DG0		
		4				EN0	DBB		
5									SCREW
	5066 962AA	1				EN0	DBB		
		1				EN0	DG0		
6									CLIP, Fuel Injector
	5083 712AA	4				EN0	DG0		
		4				EN0	DBB		
7									PIPE, Fuel Spill Return
	5093 923AA	1				EN0	DG0		
		1				EN0	DBB		
8									VALVE
	5159 962AA	1				EN0	DG0		
		1				EN0	DBB		
9									CLIP, Spill Return Pipe
	4728 184	1				EN0	DG0		
		1				EN0	DBB		
10									PIPE, Fuel
	5142 768AA	1				EN0	DG0		
		1				EN0	DBB		
11									PIPE, Fuel
	5142 605AA	2				EN0	DG0		
		2				EN0	DBB		
12									STUD
	5066 913AA	1				EN0	DG0		
		1				EN0	DBB		
13									RAIL, Fuel
	5142 817AA	1				EN0	DG0		
		1				EN0	DBB		
14									SENSOR, Fuel Pressure
	5159 963AA	1				EN0	DG0		
		1				EN0	DBB		
15									SPRING, Oil Pressure Relief Valve

2006 Liberty (KJ)

SERIES	LINE	BODY	ENGINE	TRANSMISSION
H =HIGHLINE	T =JEEP - 2WD	74 =SPORT UTILITY 4-DR	EKG=3.7L V6 Eng.	DG6=4-Spd. Auto. 42RLE Trans.
M =MEDIUM	J =JEEP - 4WD		ENR=2.8L 4 Cyl Turbo Diesel Eng.	DGV=4-Spd. Auto. VLP Trans.
P =PREMIUM	U =JEEP - 4WD (RHD)		ENJ=2.5L 4 Cyl 16V Turbo Diesel Eng.	DGQ=5-Spd Auto. 5-45RFE Trans.
			ED1=2.4L 4 Cyl DOHC 16v SMPI Eng.	DEH=6-Speed Man. NSG370 Trans.
				DDD=5-Speed HD Man. Trans.
				DDK=5-Speed HD Man. Trans.

AR = Use as required - = Non illustrated part # = New this model year

Fuel Injection System 2.8L [EN0]
Figure 014-420

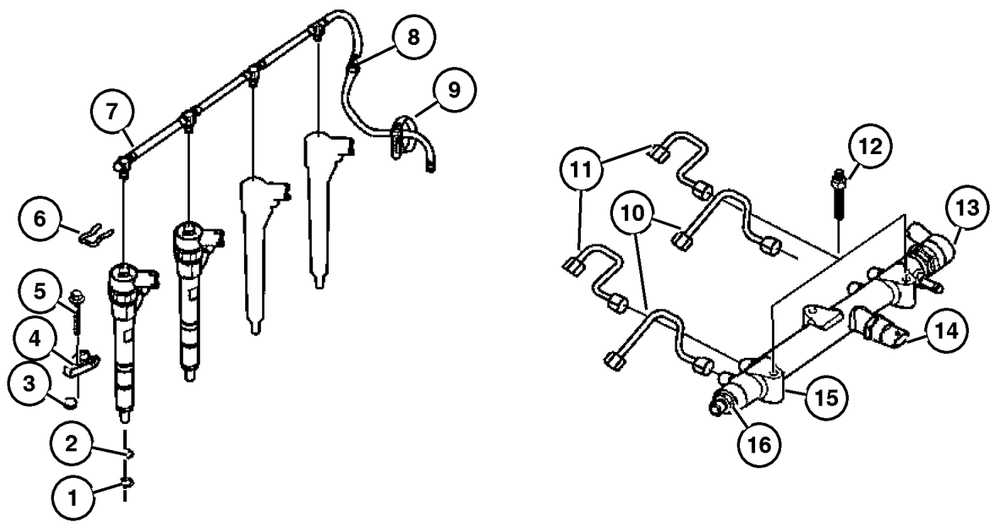

ITEM	PART NUMBER	QTY	LINE	SERIES	BODY	ENGINE	TRANS	TRIM	DESCRIPTION
	5093 915AA	1				EN0	DG0		
		16				EN0	DBB		
16									O RING
	5066 887AA	1				EN0	DG0		
		1				EN0	DBB		
-17									INJECTOR, Fuel
	5142 811AA-	4				EN0	DBB		
	5159 970AA-	4				EN0	DG0		

2006 Liberty (KJ)

SERIES	LINE	BODY	ENGINE	TRANSMISSION
H =HIGHLINE	T =JEEP - 2WD	74 =SPORT UTILITY 4-DR	EKG=3.7L V6 Eng.	DG6=4-Spd. Auto. 42RLE Trans.
M =MEDIUM	J =JEEP - 4WD		ENR=2.8L 4 Cyl Turbo Diesel Eng.	DGV=4-Spd. Auto. VLP Trans.
P =PREMIUM	U =JEEP - 4WD (RHD)		ENJ=2.5L 4 Cyl 16V Turbo Diesel Eng.	DGQ=5-Spd Auto. 5-45RFE Trans.
			ED1=2.4L 4 Cyl DOHC 16v SMPI Eng.	DEH=6-Speed Man. NSG370 Trans.
				DDD=5-Speed HD Man. Trans.
				DDK=5-Speed HD Man. Trans.

AR = Use as required - = Non illustrated part # = New this model year

Fuel Injection Pump 2.8L [EN0]
Figure 014-430

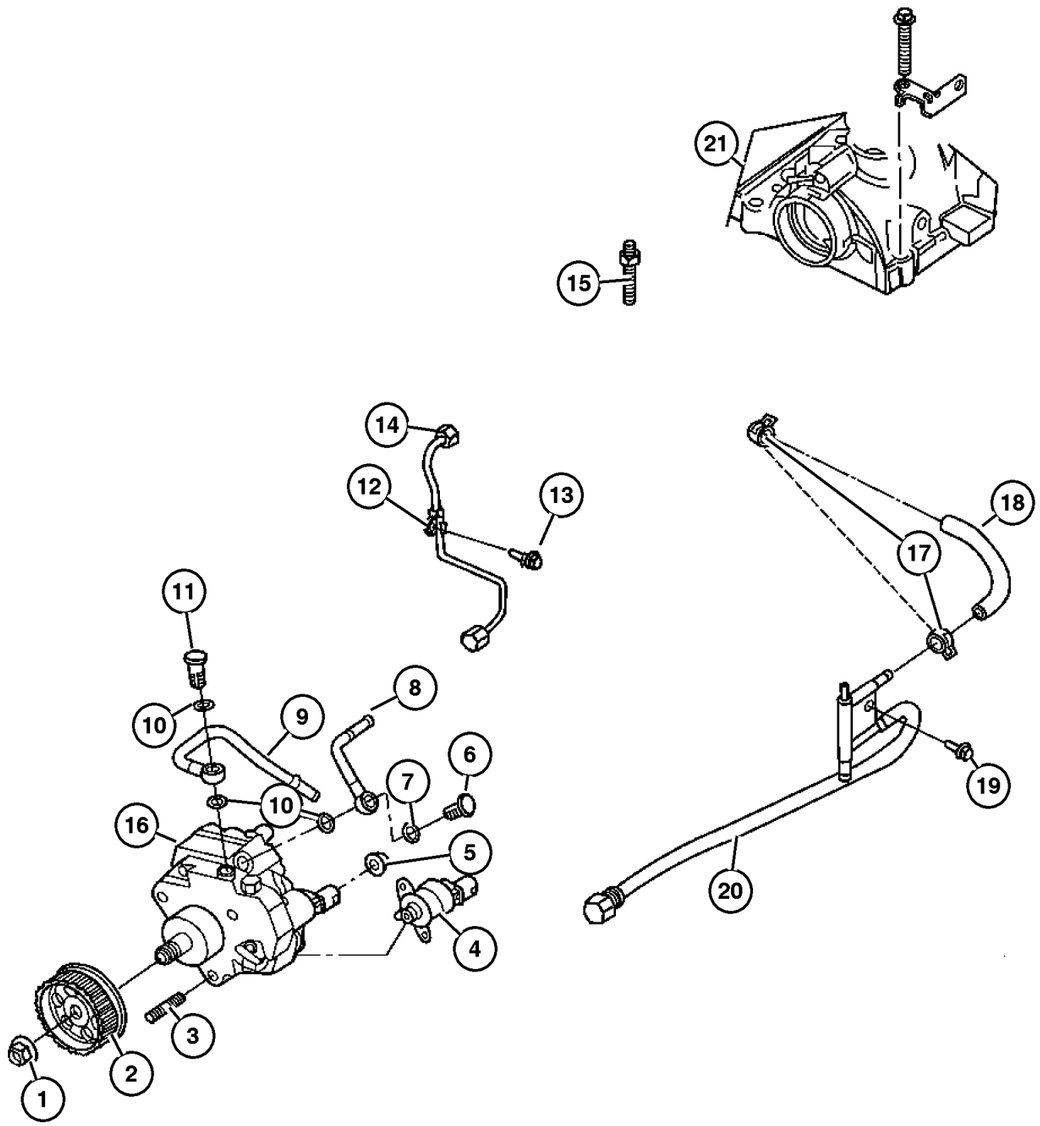

ITEM	PART NUMBER	QTY	LINE	SERIES	BODY	ENGINE	TRANS	TRIM	DESCRIPTION
Note; Sales Codes									
[DBB] = All Manual Transmissions									
[EN0]= All 4/5 Cylinder Turbo Diesels									
1									NUT
	5066 817AA	1				EN0	DG0		
		1				EN0	DBB		
2									GEAR, Injection Pump
	5066 903AA	1				EN0	DG0		
		1				EN0	DBB		
3									STUD, Injection Pump
	5066 908AA	3				EN0	DG0		
		3				EN0	DBB		
4									VALVE
	5159 962AA	1				EN0	DG0		
		1				EN0	DBB		
5									NUT
	4778 961	7				EN0	DG0		
		7				EN0	DBB		
6									BOLT, Banjo
	4720 367	2				EN0	DG0		
		2				EN0	DBB		
7									WASHER, Plain
	4720 703	4				EN0	DG0		
		4				EN0	DBB		
8									PIPE
	5142 987AA	1				EN0	DG0		
		1				EN0	DBB		
9									PIPE, Fuel
	5142 814AA	1				EN0	DG0		
		1				EN0	DBB		
10									WASHER, Plain
	4720 703	4				EN0	DG0		
		4				EN0	DBB		
11									BOLT, Banjo
	4720 367	2				EN0	DG0		
		2				EN0	DBB		
12									CLIP
	5142 800AA	1				EN0	DG0		
		1				EN0	DBB		
13									BOLT
	4864 748AB	1				EN0	DG0		
		1				EN0	DBB		
14									PIPE

2006 Liberty (KJ)

SERIES	LINE	BODY	ENGINE	TRANSMISSION
H =HIGHLINE	T =JEEP - 2WD	74 =SPORT UTILITY 4-DR	EKG=3.7L V6 Eng.	DG6=4-Spd. Auto. 42RLE Trans.
M =MEDIUM	J =JEEP - 4WD		ENR=2.8L 4 Cyl Turbo Diesel Eng.	DGV=4-Spd. Auto. VLP Trans.
P =PREMIUM	U =JEEP - 4WD (RHD)		ENJ=2.5L 4 Cyl 16V Turbo Diesel Eng.	DGQ=5-Spd Auto. 5-45RFE Trans.
			ED1=2.4L 4 Cyl DOHC 16v SMPI Eng.	DEH=6-Speed Man. NSG370 Trans.
				DDD=5-Speed HD Man. Trans.
				DDK=5-Speed HD Man. Trans.

AR = Use as required - = Non illustrated part # = New this model year

Fuel Injection Pump 2.8L [EN0]
Figure 014-430

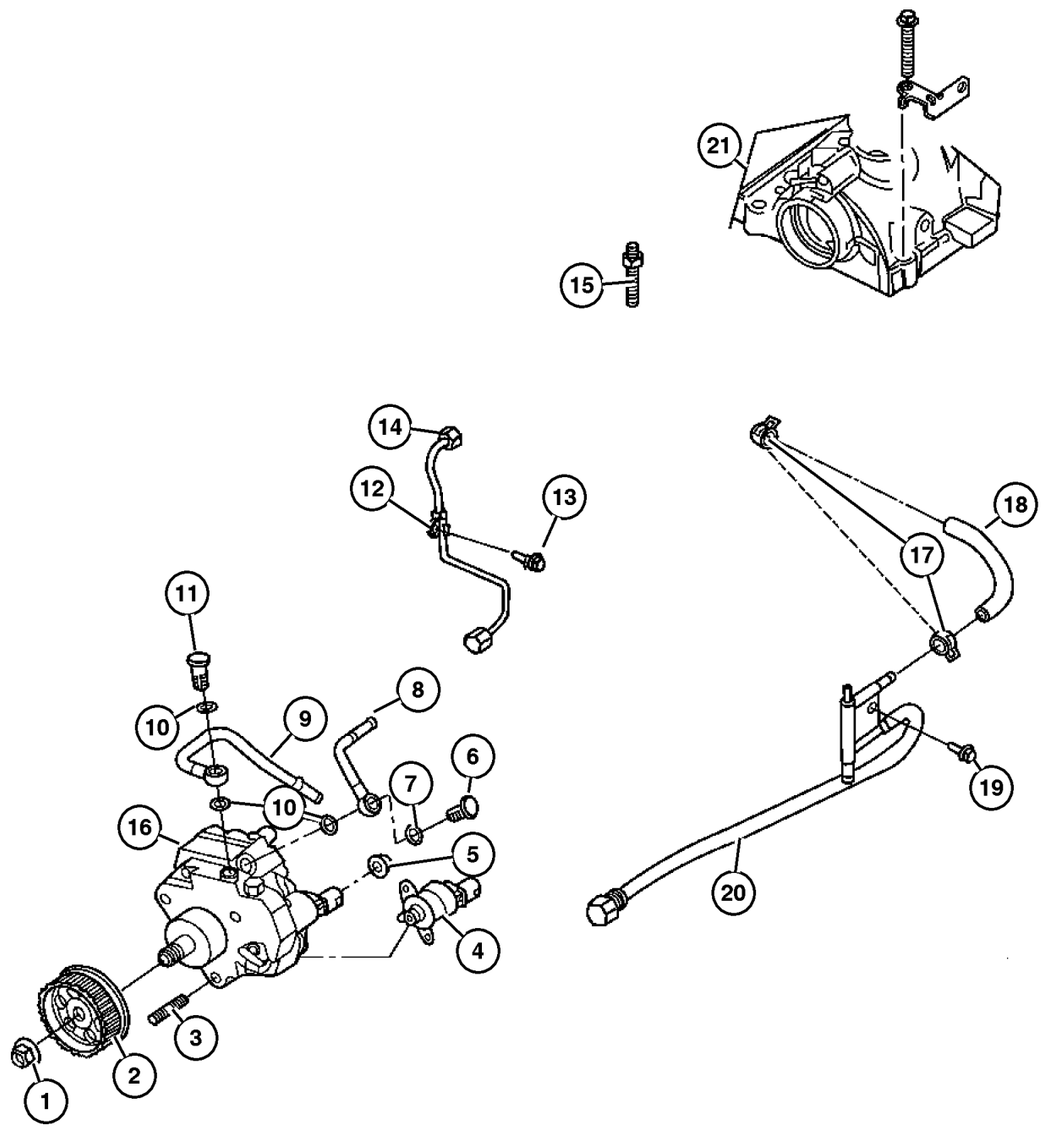

ITEM	PART NUMBER	QTY	LINE	SERIES	BODY	ENGINE	TRANS	TRIM	DESCRIPTION
	5142 987AA	1				EN0	DG0		
		1				EN0	DBB		
15									STUD
	5066 913AA	1				EN0	DG0		
		1				EN0	DBB		
16									PUMP, Fuel Injection
	5066 819AB	1				EN0	DG0		
		1				EN0	DBB		
17									CLAMP, Heater Hose
	4886 051AA	1				EN0	DBB		
		1				EN0	DG0		
18									HOSE, Fuel
	5142 789AA	1				EN0	DG0		
		1				EN0	DBB		
19									SCREW
	5066 944AB	1				EN0	DG0		
		1				EN0	DBB		
20									BLOCK, Fuel Return
	5142 809AA	1				EN0	DG0		
		1				EN0	DBB		
21									BRACKET
	5142 649AA	1				EN0	DG0		
		1				EN0	DBB		

2006 Liberty (KJ)

SERIES	LINE	BODY	ENGINE	TRANSMISSION
H =HIGHLINE	T =JEEP - 2WD	74 =SPORT UTILITY 4-DR	EKG=3.7L V6 Eng.	DG6=4-Spd. Auto. 42RLE Trans.
M =MEDIUM	J =JEEP - 4WD		ENR=2.8L 4 Cyl Turbo Diesel Eng.	DGV=4-Spd. Auto. VLP Trans.
P =PREMIUM	U =JEEP - 4WD (RHD)		ENJ=2.5L 4 Cyl 16V Turbo Diesel Eng.	DGQ=5-Spd Auto. 5-45RFE Trans.
			ED1=2.4L 4 Cyl DOHC 16v SMPI Eng.	DEH=6-Speed Man. NSG370 Trans.
				DDD=5-Speed HD Man. Trans.
				DDK=5-Speed HD Man. Trans.

Fuel Injection Pump Mounting
Figure 014-435

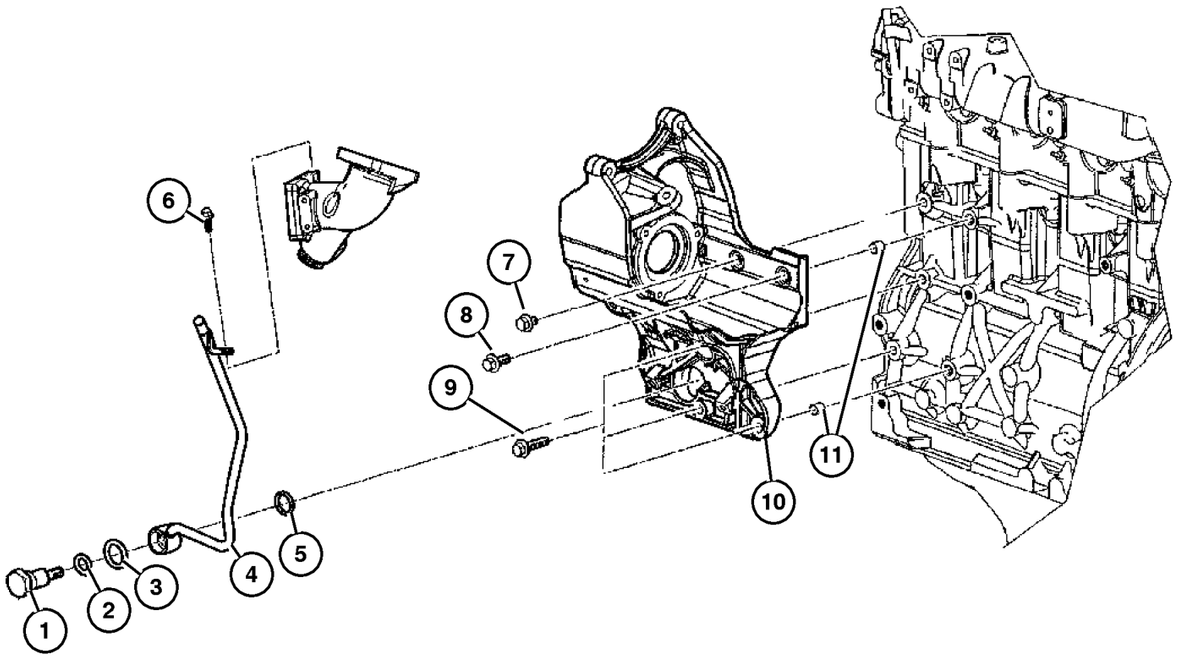

ITEM	PART NUMBER	QTY	LINE	SERIES	BODY	ENGINE	TRANS	TRIM	DESCRIPTION
Note; Sales Codes;									
[DBB] = All Manual Transmissions									
[DG0] = All Automatic Transmissions									
[EN0] = All 4/5 Cylinder Turbo Diesel Engines									
1									VALVE, Vacuum Pump
	5015 037AA	1				EN0	DG0		
		1				EN0	DBB		
2									O RING
	5066 860AA	1				EN0	DBB		
		1				EN0	DG0		
3									WASHER, Plain
	5015 040AA	1				EN0	DG0		
		1				EN0	DBB		
4									LINE, Vacuum
	5142 786AA	1				EN0	DG0		
		1				EN0	DBB		
5									GASKET, Vacuum Pump, .
	4863 779	1				EN0	DG0		
		1				EN0	DBB		
6									BOLT, M6x10
	5003 551AA	1				EN0	DG0		
		1				EN0	DBB		
7									SCREW
	5093 900AB	1				EN0	DG0		
		1				EN0	DBB		
8									BOLT, Adaptor Plate
	5003 532AB	1				EN0	DG0		
		1				EN0	DBB		
9									BOLT, Hex Flange Head, M10x35
	4897 253AB	1				EN0	DG0		
		1				EN0	DBB		
10									BRACKET, Accessory Mount
	5142 553AA	1				EN0	DG0		
		1				EN0	DBB		
11									PIN
	5066 862AA	1				EN0	DBB		
		1				EN0	DG0		

2006 Liberty (KJ)

SERIES	LINE	BODY	ENGINE	TRANSMISSION
H =HIGHLINE	T =JEEP - 2WD	74 =SPORT UTILITY 4-DR	EKG=3.7L V6 Eng.	DG6=4-Spd. Auto. 42RLE Trans.
M =MEDIUM	J =JEEP - 4WD		ENR=2.8L 4 Cyl Turbo Diesel Eng.	DGV=4-Spd. Auto. VLP Trans.
P =PREMIUM	U =JEEP - 4WD (RHD)		ENJ=2.5L 4 Cyl 16V Turbo Diesel Eng.	DGQ=5-Spd Auto. 5-45RFE Trans.
			ED1=2.4L 4 Cyl DOHC 16v SMPI Eng.	DEH=6-Speed Man. NSG370 Trans.
				DDD=5-Speed HD Man. Trans.
				DDK=5-Speed HD Man. Trans.

Fuel Pump and Sending Unit, 3.7L [EK0] 2.8L [EN0]
Figure 014-510

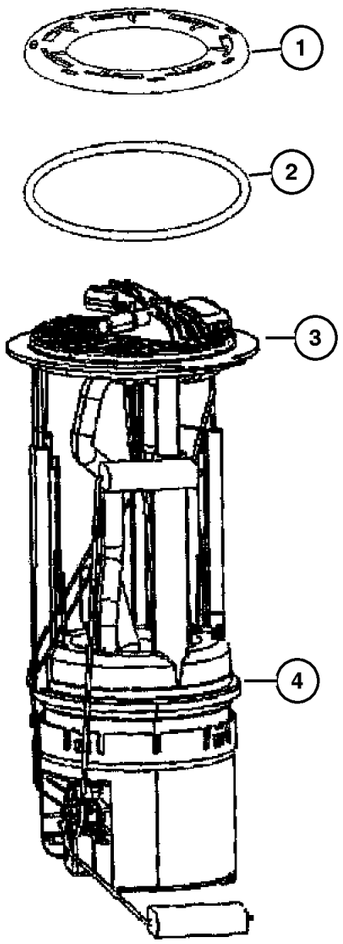

ITEM	PART NUMBER	QTY	LINE	SERIES	BODY	ENGINE	TRANS	TRIM	DESCRIPTION
Note; Sales Codes									
[EKG]= All "Magnum" 3.7L V6 Engine									
[ENR]= All 2.8L 4 C ylinder Turbo Diesel Engine									
1									RING, Lock, Fuel Module
	55366 299AA	1				EN0			
		1				EK0			
2									O RING, Fuel Pump and Level Unit
	55366 298AA	1				EN0			
		1				EK0			
3	5140 832AB	1				EN0			MODULE PACKAGE, Fuel Tank
4	5140 829AC	1				EK0			MODULE KIT, Fuel Pump/Level Unit, This Kit Contain The Following ~~52128975AE Fuel Module Assy
									~~55366298AA Seal - Fuel Pump and Level Unit

2006 Liberty (KJ)

SERIES	LINE	BODY	ENGINE	TRANSMISSION
H =HIGHLINE	T =JEEP - 2WD	74 =SPORT UTILITY 4-DR	EKG=3.7L V6 Eng.	DG6=4-Spd. Auto. 42RLE Trans.
M =MEDIUM	J =JEEP - 4WD		ENR=2.8L 4 Cyl Turbo Diesel Eng.	DGV=4-Spd. Auto. VLP Trans.
P =PREMIUM	U =JEEP - 4WD (RHD)		ENJ=2.5L 4 Cyl 16V Turbo Diesel Eng.	DGQ=5-Spd Auto. 5-45RFE Trans.
			ED1=2.4L 4 Cyl DOHC 16v SMPI Eng.	DEH=6-Speed Man. NSG370 Trans.
				DDD=5-Speed HD Man. Trans.
				DDK=5-Speed HD Man. Trans.

Throttle Body, 3.7, [EK0]
Figure 014-610

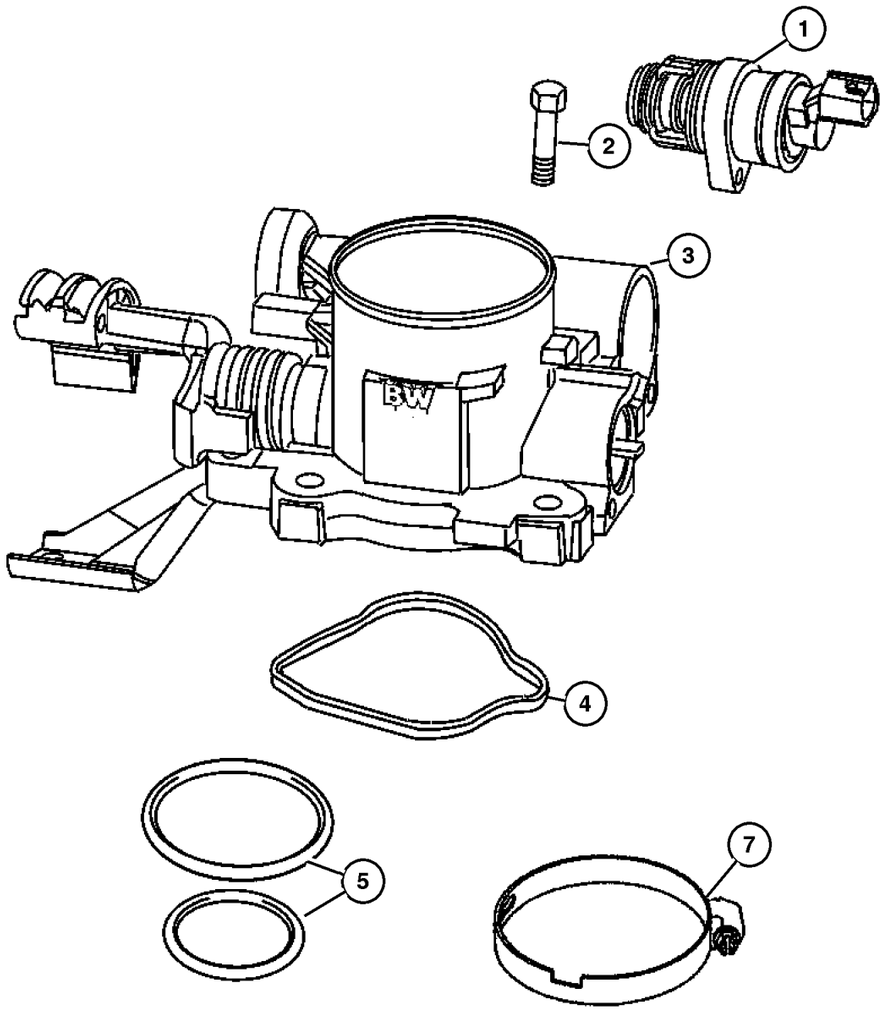

ITEM	PART NUMBER	QTY	LINE	SERIES	BODY	ENGINE	TRANS	TRIM	DESCRIPTION
Note; Sales Codes									
[EK0]= All 3.7L, 6 Cylinder Gas Engines									
1	4861 552AC	1				EK0			SOLENOID, Linear IACV
2									SCREW, Hex Head, M6 x 1.00 x 40. 00, (NOT SERVICED) (Not Serviced)
3	5139 073AB	1				EK0			THROTTLE BODY
4	53013 292AB	1				EK0			GASKET, Throttle Body To Intake
5	5114 356AA	1				EK0			O RING KIT, Linear Solenoid
-6	5019 411AC-	1				EK0			SENSOR KIT, Throttle Position, Attaching Screws No Oring Required For This Application
7	53013 725AA	1				EK0			CLAMP, Hose to Throttle Body

2006 Liberty (KJ)

SERIES	LINE	BODY	ENGINE	TRANSMISSION
H =HIGHLINE	T =JEEP - 2WD	74 =SPORT UTILITY 4-DR	EKG=3.7L V6 Eng.	DG6=4-Spd. Auto. 42RLE Trans.
M =MEDIUM	J =JEEP - 4WD		ENR=2.8L 4 Cyl Turbo Diesel Eng.	DGV=4-Spd. Auto. VLP Trans.
P =PREMIUM	U =JEEP - 4WD (RHD)		ENJ=2.5L 4 Cyl 16V Turbo Diesel Eng.	DGQ=5-Spd Auto. 5-45RFE Trans.
			ED1=2.4L 4 Cyl DOHC 16v SMPI Eng.	DEH=6-Speed Man. NSG370 Trans.
				DDD=5-Speed HD Man. Trans.
				DDK=5-Speed HD Man. Trans.

Turbocharger 2.8L [EN0]
Figure 014-620

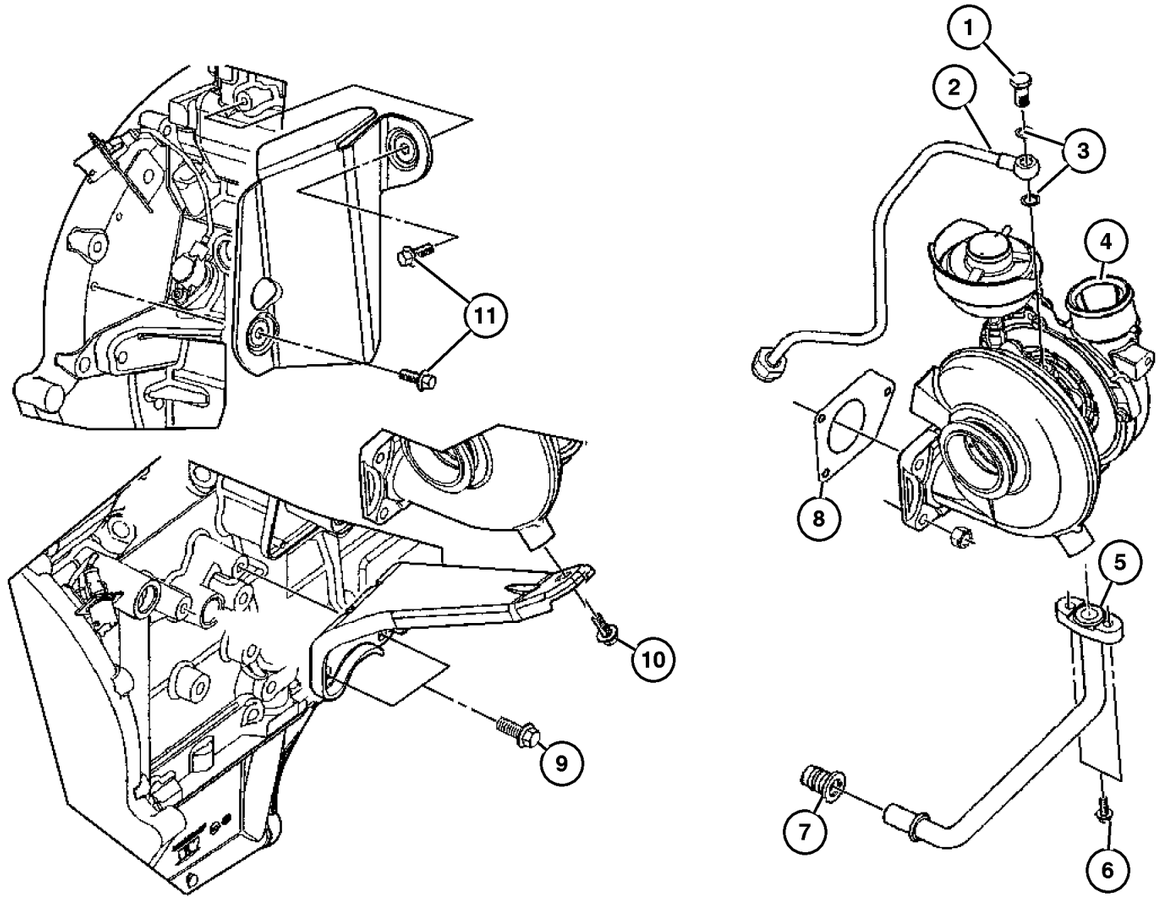

ITEM	PART NUMBER	QTY	LINE	SERIES	BODY	ENGINE	TRANS	TRIM	DESCRIPTION
Note; Sales Codes									
[DBB]= All Manual Transmissions									
[EN0]= All 4/5 Cylinder Turbo Diesels									
1									SCREW
	5142 792AA	1				EN0	DG0		
		1				EN0	DBB		
2									PIPE
	5142 607AA	1				EN0	DG0		
		1				EN0	DBB		
3									WASHER, Implement Attaching
	4720 713	5				EN0	DG0		
		5				EN0	DBB		
4									TURBOCHARGER
	5142 797AB	1				EN0	DG0		
		1				EN0	DBB		
5									PIPE, Turbo Oil Drain
	5142 606AA	1				EN0	DG0		
		1				EN0	DBB		
6									SCREW
	5066 944AB	1				EN0	DBB		
	5066 960AB	6				EN0	DG0		
7									SEAL
	5142 794AA	1				EN0	DG0		
		1				EN0	DBB		
8									GASKET, Turbocharger
	5142 657AB	1				EN0	DG0		
		1				EN0	DBB		
9									SCREW
	5066 986AA	1				EN0	DBB		
		1				EN0	DG0		
10									SCREW, Qty wrong
	5066 986AA	11				EN0	DBB		
		1				EN0	DG0		
11									SCREW
	5003 553AB	1				EN0	DG0		
		1				EN0	DBB		

2006 Liberty (KJ)

SERIES	LINE	BODY	ENGINE	TRANSMISSION
H =HIGHLINE	T =JEEP - 2WD	74 =SPORT UTILITY 4-DR	EKG=3.7L V6 Eng.	DG6=4-Spd. Auto. 42RLE Trans.
M =MEDIUM	J =JEEP - 4WD		ENR=2.8L 4 Cyl Turbo Diesel Eng.	DGV=4-Spd. Auto. VLP Trans.
P =PREMIUM	U =JEEP - 4WD (RHD)		ENJ=2.5L 4 Cyl 16V Turbo Diesel Eng.	DGQ=5-Spd Auto. 5-45RFE Trans.
			ED1=2.4L 4 Cyl DOHC 16v SMPI Eng.	DEH=6-Speed Man. NSG370 Trans.
				DDD=5-Speed HD Man. Trans.
				DDK=5-Speed HD Man. Trans.

Electric turbo Modulator
Figure 014-630

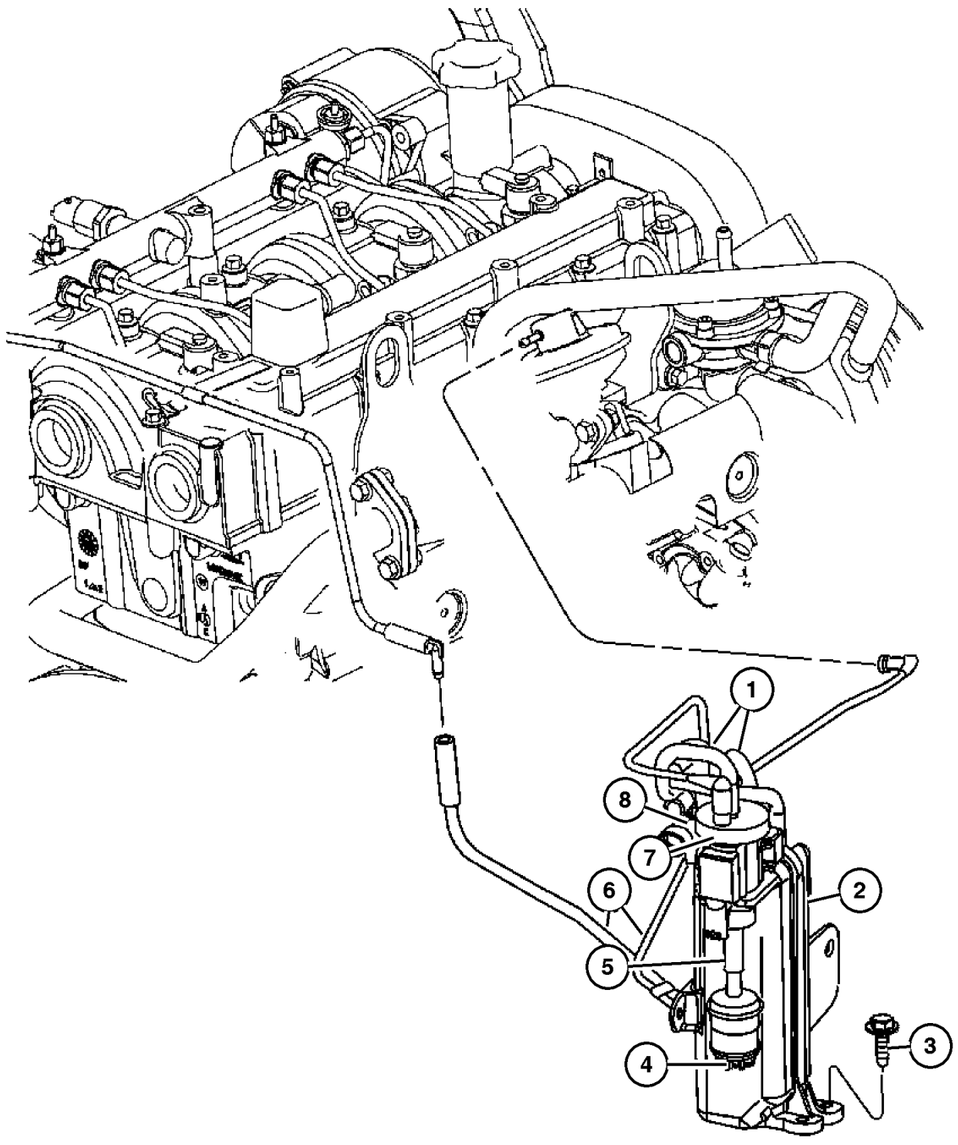

ITEM	PART NUMBER	QTY	LINE	SERIES	BODY	ENGINE	TRANS	TRIM	DESCRIPTION
Note; Sales Codes									
[EN0]= All 4/5 Cylinder Turbo Diesels									
1									HOSE, Solenoid
	5143 972AA	1	J, U			EN0			Wastgate Solenoid
	5143 973AA	1	J, U			EN0			This hose goes between the vacuum solenoid
2	52129 285AA	1	J, U			EN0			RESERVOIR, Vacuum
3									SCREW, M4.8-1.59X15.00, (NOT SERVICED) (Not Serviced)
4	5080 374AA	1	J, U			EN0			FILTER, Vacuum Sensor
5	52109 619AB	1	J, U			EN0			HOSE, Solenoid
6	5161 263AC	1	J, U			EN0			TUBE ASSY, Vacuum
7	52109 543AA	1	J, U			EN0			MODULATOR, Vacuum Electric
8	4606 226AC	1	J, U			EN0			SOLENOID, Secondary Runner Valve

2006 Liberty (KJ)

SERIES	LINE	BODY	ENGINE	TRANSMISSION
H =HIGHLINE	T =JEEP - 2WD	74 =SPORT UTILITY 4-DR	EKG=3.7L V6 Eng.	DG6=4-Spd. Auto. 42RLE Trans.
M =MEDIUM	J =JEEP - 4WD		ENR=2.8L 4 Cyl Turbo Diesel Eng.	DGV=4-Spd. Auto. VLP Trans.
P =PREMIUM	U =JEEP - 4WD (RHD)		ENJ=2.5L 4 Cyl 16V Turbo Diesel Eng.	DGQ=5-Spd Auto. 5-45RFE Trans.
			ED1=2.4L 4 Cyl DOHC 16v SMPI Eng.	DEH=6-Speed Man. NSG370 Trans.
				DDD=5-Speed HD Man. Trans.
				DDK=5-Speed HD Man. Trans.

Throttle Controls, 3.7L [EK0]
Figure 014-720

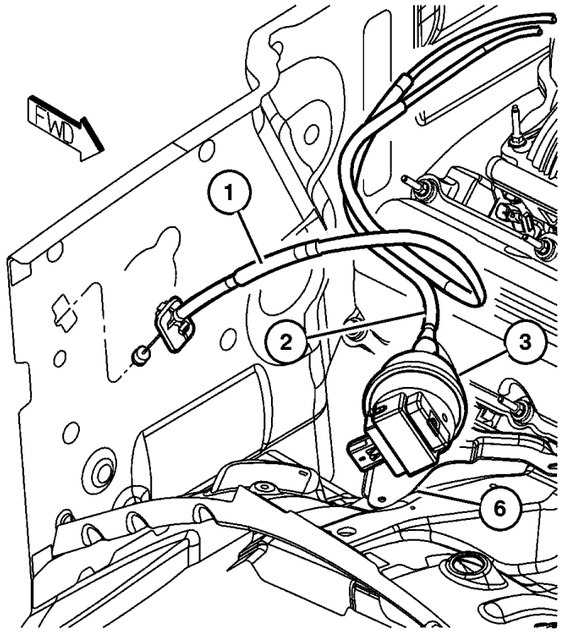

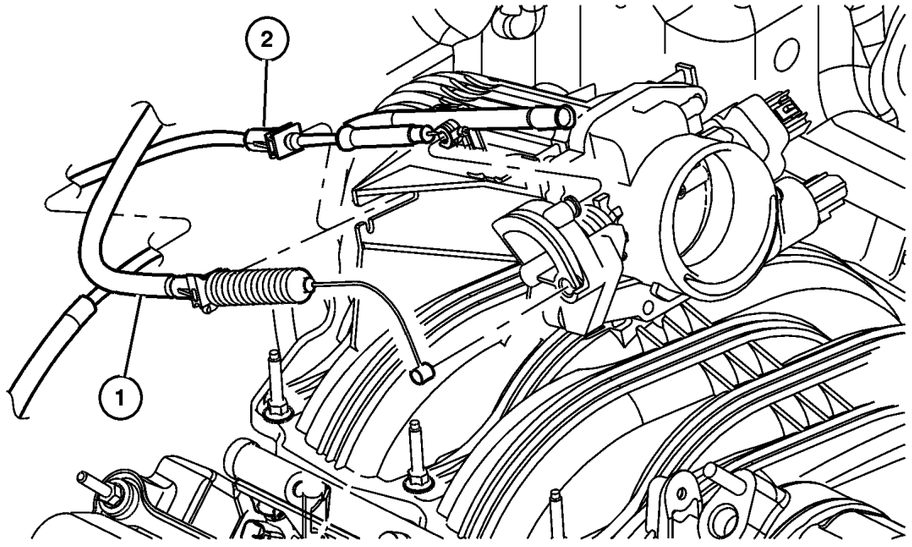

ITEM	PART NUMBER	QTY	LINE	SERIES	BODY	ENGINE	TRANS	TRIM	DESCRIPTION
Note; Sales Codes									
[EKG]= 3.7L Magnum V-6									
[EK0]= All 3.7L V-6 Gas Engines									
1									CABLE, Accelerator
	53013 136AF	1	J, T			EKG			
	53013 138AE	1	U			EKG			
2	53013 367AD	1				EK0			CABLE, Speed Control
3	4669 979	1				EK0			SERVO, Speed Control
-4	6502 493	2				EK0			NUT, Hex Flange Serration, M6x1
-5	6025 867	1				EK0			CLIP, Cable to Servo Attach
6	53013 348AA	1				EK0			BRACKET, Speed Control Servo
-7	5214 613	1	J, T						CLIP, Cable, Accelerator Cable to Pedal

2006 Liberty (KJ)

SERIES	LINE	BODY	ENGINE	TRANSMISSION
H =HIGHLINE	T =JEEP - 2WD	74 =SPORT UTILITY 4-DR	EKG=3.7L V6 Eng.	DG6=4-Spd. Auto. 42RLE Trans.
M =MEDIUM	J =JEEP - 4WD		ENR=2.8L 4 Cyl Turbo Diesel Eng.	DGV=4-Spd. Auto. VLP Trans.
P =PREMIUM	U =JEEP - 4WD (RHD)		ENJ=2.5L 4 Cyl 16V Turbo Diesel Eng.	DGQ=5-Spd Auto. 5-45RFE Trans.
			ED1=2.4L 4 Cyl DOHC 16v SMPI Eng.	DEH=6-Speed Man. NSG370 Trans.
				DDD=5-Speed HD Man. Trans.
				DDK=5-Speed HD Man. Trans.

Air Cleaner, 3.7L [EK0]
Figure 014-820

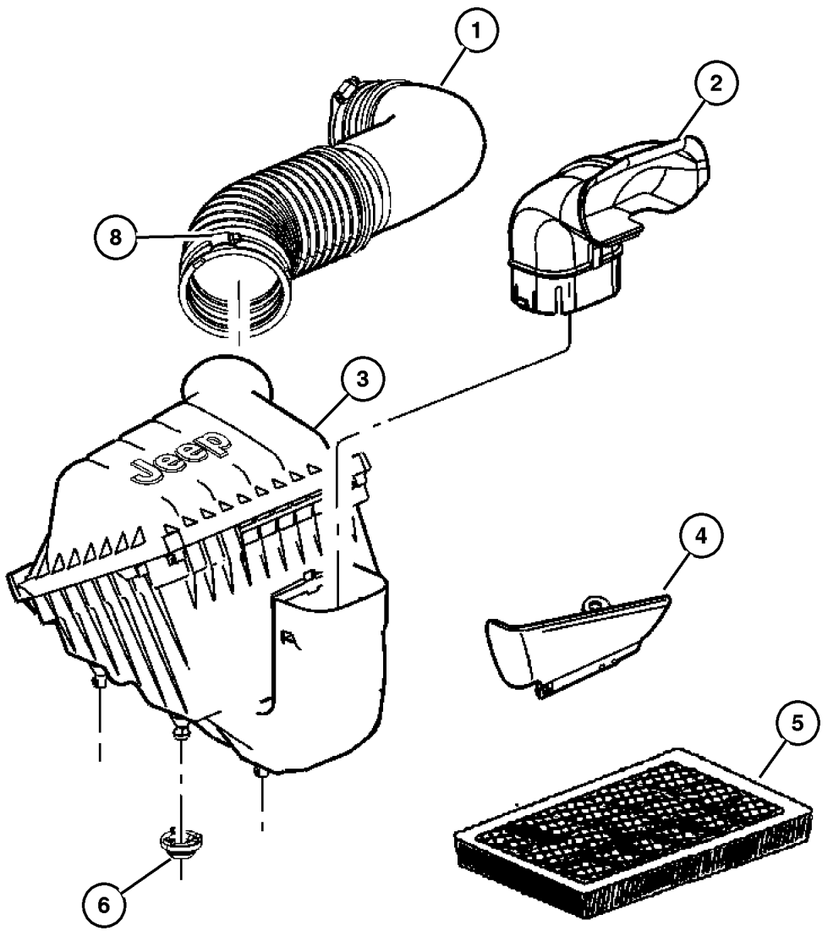

3.7L

ITEM	PART NUMBER	QTY	LINE	SERIES	BODY	ENGINE	TRANS	TRIM	DESCRIPTION
Note; Sales Codes									
[EK0]= All 3.7L, 6 Cylinder Gas Engines									
[EN0]= All 4/5 Cylinder Turbo Diesels									
1	53013 724AA	1				EK0			HOSE, Air Cleaner
2	53013 103AA	1				EK0			INLET, Fresh Air
3	53013 727AA	1				EK0			AIR CLEANER
4	53013 509AA	1				EK0			BAFFLE, Air Inlet
5	5018 777AB	1				EK0			FILTER, Air
6	53013 357AA	3				EK0, EN0			GROMMET, Air Cleaner
-7	6036 456AA-	1				EK0			RIVET
8	53013 726AA	1				EK0			CLAMP, Hose to Air Cleaner

2006 Liberty (KJ)

SERIES	LINE	BODY	ENGINE	TRANSMISSION
H =HIGHLINE	T =JEEP - 2WD	74 =SPORT UTILITY 4-DR	EKG=3.7L V6 Eng.	DG6=4-Spd. Auto. 42RLE Trans.
M =MEDIUM	J =JEEP - 4WD		ENR=2.8L 4 Cyl Turbo Diesel Eng.	DGV=4-Spd. Auto. VLP Trans.
P =PREMIUM	U =JEEP - 4WD (RHD)		ENJ=2.5L 4 Cyl 16V Turbo Diesel Eng.	DGQ=5-Spd Auto. 5-45RFE Trans.
			ED1=2.4L 4 Cyl DOHC 16v SMPI Eng.	DEH=6-Speed Man. NSG370 Trans.
				DDD=5-Speed HD Man. Trans.
				DDK=5-Speed HD Man. Trans.

Air Cleaner, 2.8L [EN0]
Figure 014-830

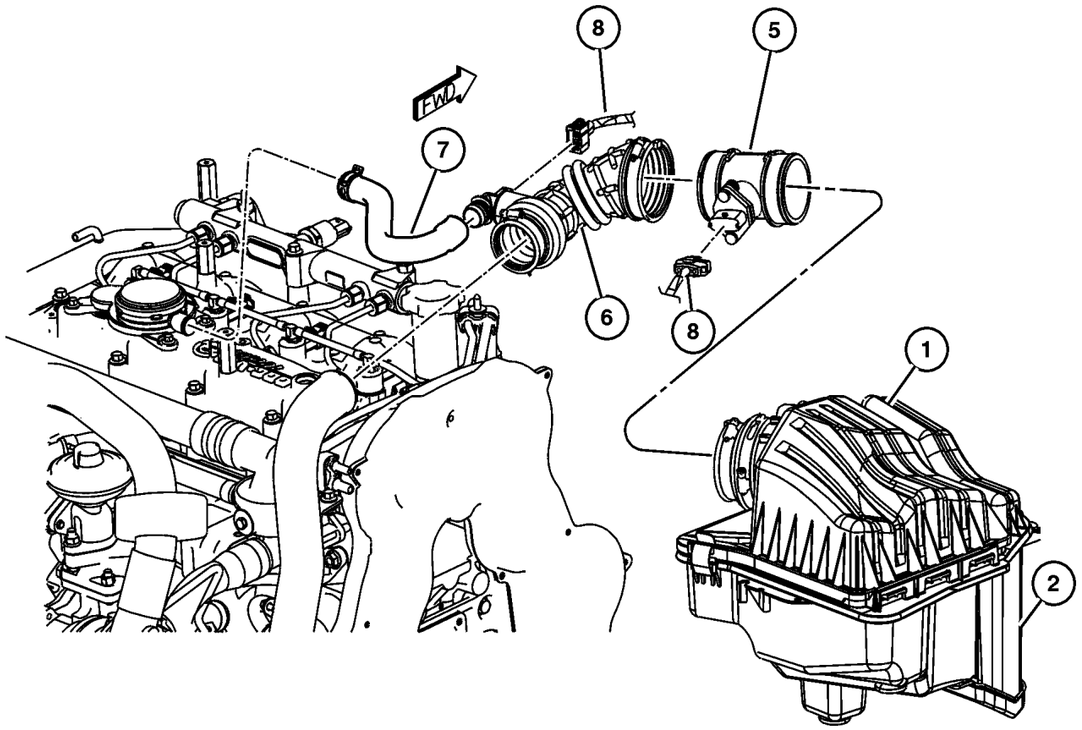

ITEM	PART NUMBER	QTY	LINE	SERIES	BODY	ENGINE	TRANS	TRIM	DESCRIPTION
Note; Sales Codes									
[EK0]= All 3.7L, 6 Cylinder Gas Engines									
[EN0]= All 4/5 Cylinder Turbo Diesels									
1	5159 174AA	1				EN0			COVER, Air Cleaner
2	5159 170AA	1				EN0			BODY, Air Cleaner
-3	5018 777AB-	1				EN0			FILTER, Air
-4	53013 762AB-	1				EN0			INLET, Fresh Air
5									SENSOR PACKAGE, Air Flow Meter, (NOT SERVICED) (Not Serviced)
6	53013 104AE	1				EN0			HOSE, Clean Air
7	53013 729AC	1				EN0			HOSE, Separator To Air Cleaner
8									WIRING, Engine, See Group 8, (NOT SERVICED) (Not Serviced)
-9	6102 192AA-	2				EN0			SCREW, Intake Manifold

2006 Liberty (KJ)

SERIES	LINE	BODY	ENGINE	TRANSMISSION
H =HIGHLINE	T =JEEP - 2WD	74 =SPORT UTILITY 4-DR	EKG=3.7L V6 Eng.	DG6=4-Spd. Auto. 42RLE Trans.
M =MEDIUM	J =JEEP - 4WD		ENR=2.8L 4 Cyl Turbo Diesel Eng.	DGV=4-Spd. Auto. VLP Trans.
P =PREMIUM	U =JEEP - 4WD (RHD)		ENJ=2.5L 4 Cyl 16V Turbo Diesel Eng.	DGQ=5-Spd Auto. 5-45RFE Trans.
			ED1=2.4L 4 Cyl DOHC 16v SMPI Eng.	DEH=6-Speed Man. NSG370 Trans.
				DDD=5-Speed HD Man. Trans.
				DDK=5-Speed HD Man. Trans.

Speed Control
Figure 014-1010

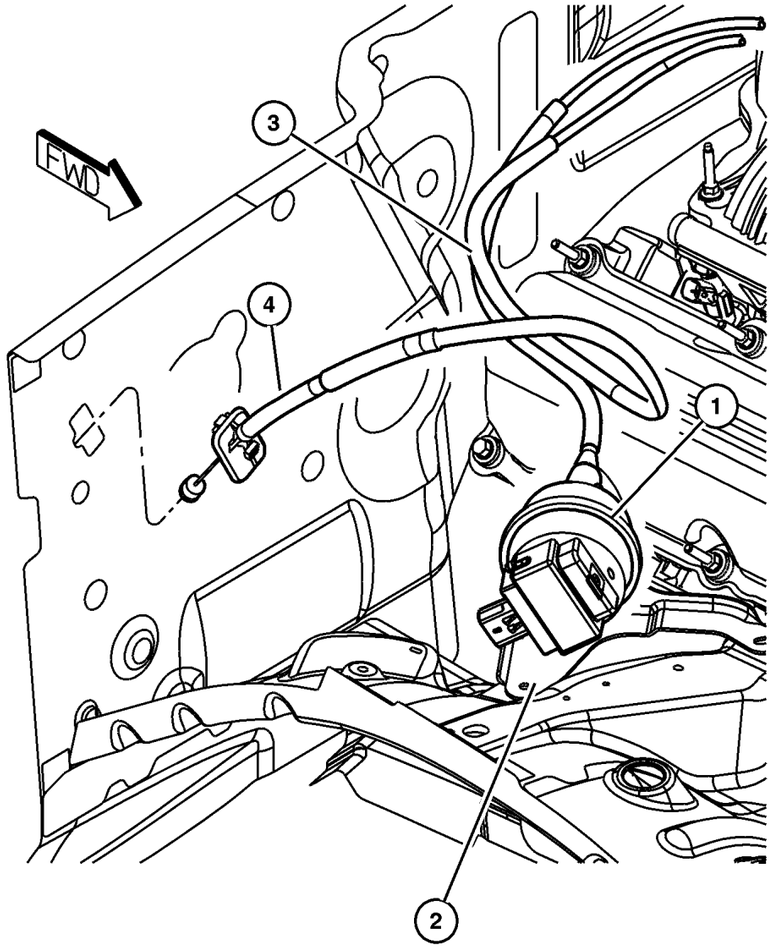

ITEM	PART NUMBER	QTY	LINE	SERIES	BODY	ENGINE	TRANS	TRIM	DESCRIPTION
Note; Sales Codes									
[EK0]= All 3.7L 6 Cylinder Gas Engines									
1	4669 979	1				EK0			SERVO, Speed Control
2	53013 348AA	1				EK0			BRACKET, Speed Control Servo
3	53013 367AE	1				EK0			CABLE, Speed Control
4									CABLE, Accelerator
	53013 136AF	1	J, T			EKG			
	53013 138AE	1	U			EKG			
-5	53013 347AC-	1				EK0			HARNESS, Speed Control Vacuum
-6	6502 493	2				EK0			NUT, Hex Flange Serration, M6x1
-7	6025 867	1				EK0			CLIP, Cable to Servo Attach
-8	55037 536AB-	1							RESERVOIR, Speed Control Vacuum

2006 Liberty (KJ)

SERIES	LINE	BODY	ENGINE	TRANSMISSION
H =HIGHLINE	T =JEEP - 2WD	74 =SPORT UTILITY 4-DR	EKG=3.7L V6 Eng.	DG6=4-Spd. Auto. 42RLE Trans.
M =MEDIUM	J =JEEP - 4WD		ENR=2.8L 4 Cyl Turbo Diesel Eng.	DGV=4-Spd. Auto. VLP Trans.
P =PREMIUM	U =JEEP - 4WD (RHD)		ENJ=2.5L 4 Cyl 16V Turbo Diesel Eng.	DGQ=5-Spd Auto. 5-45RFE Trans.
			ED1=2.4L 4 Cyl DOHC 16v SMPI Eng.	DEH=6-Speed Man. NSG370 Trans.
				DDD=5-Speed HD Man. Trans.
				DDK=5-Speed HD Man. Trans.

Accelerator Pedal
Figure 014-1110

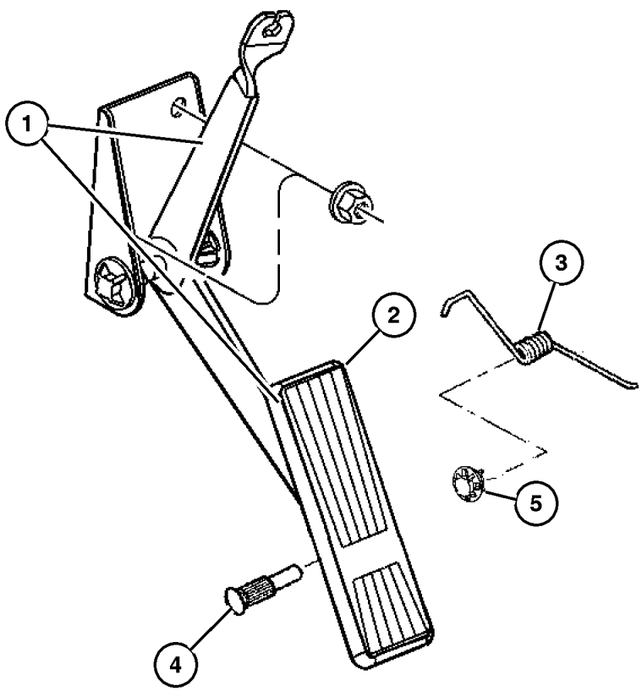

ITEM	PART NUMBER	QTY	LINE	SERIES	BODY	ENGINE	TRANS	TRIM	DESCRIPTION
Note; Sales Codes									
[EK0]= All 3.7L 6 Cylinder Gas Engines									
[EN0]= All 4/5 Cylinder Turbo Diesels									
1									PEDAL, Accelerator
	53013 527AB	1	J, T			ED0,			
						EK0			
	53013 528AB	1	U			ED0,			
						EK0			
	53013 703AB	1	J, T			EN0			
	53013 704AD	1	U			EN0			
2									PAD, Accelerator Pedal, Also Serviced In Item 1
	53003 932AB	1	J, T			ED0,			
						EK0			
		1	U			ED0,			
						EK0			
3									SPRING, Accelerator Pedal Return, Also Serviced In Item 1
	5207 8168	1	J, T			ED0,			
						EK0			
		1	U			ED0,			
						EK0			
4									PIN, Accelerator Pedal Mtg., Also Serviced In Item 1
	J322 0231	1	J, T			ED0,			
						EK0			
		1	U			ED0,			
						EK0			
5									BUSHING, Accelerator Pedal, Also Serviced In Item 1
	52078 653AB	2	J, T			ED0,			
						EK0			
		2	U			ED0,			
						EK0			
-6									NUT, (NOT SERVICED) (Not Serviced)

2006 Liberty (KJ)

SERIES	LINE	BODY	ENGINE	TRANSMISSION
H =HIGHLINE	T =JEEP - 2WD	74 =SPORT UTILITY 4-DR	EKG=3.7L V6 Eng.	DG6=4-Spd. Auto. 42RLE Trans.
M =MEDIUM	J =JEEP - 4WD		ENR=2.8L 4 Cyl Turbo Diesel Eng.	DGV=4-Spd. Auto. VLP Trans.
P =PREMIUM	U =JEEP - 4WD (RHD)		ENJ=2.5L 4 Cyl 16V Turbo Diesel Eng.	DGQ=5-Spd Auto. 5-45RFE Trans.
			ED1=2.4L 4 Cyl DOHC 16v SMPI Eng.	DEH=6-Speed Man. NSG370 Trans.
				DDD=5-Speed HD Man. Trans.
				DDK=5-Speed HD Man. Trans.

Group – 016

Propeller Shafts and U–Joints

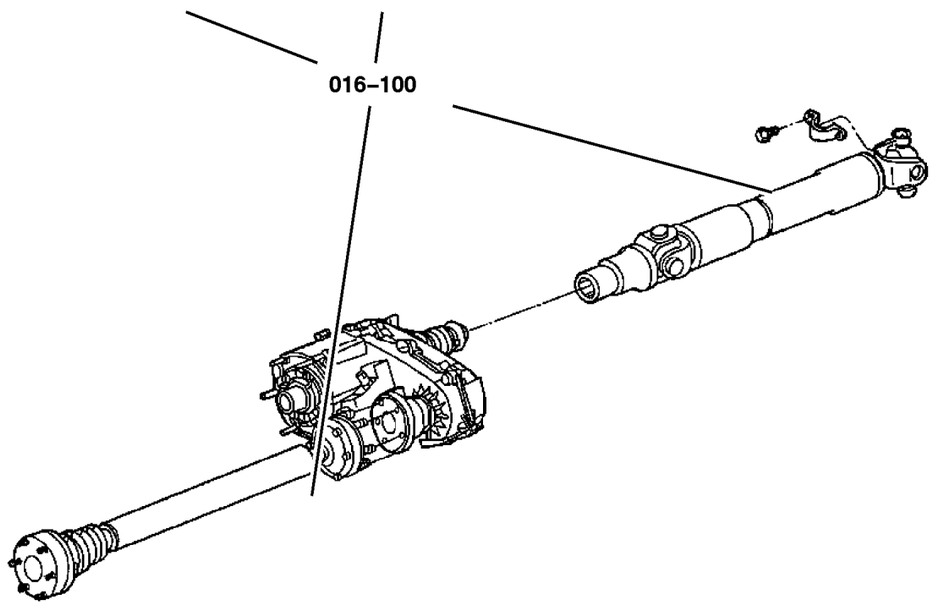

016–100 **Propeller Shaft** 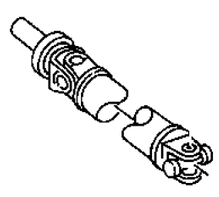			

GROUP 16 - Propeller Shafts and U-Joints

Illustration Title — Group-Fig. No.

Propeller Shaft

Propeller Shaft,2 Wheel Drive . . . . . Fig. 016-110
Propeller Shaft,4 Wheel Drive . . . . . Fig. 016-120

Propeller Shaft,2 Wheel Drive
Figure 016-110

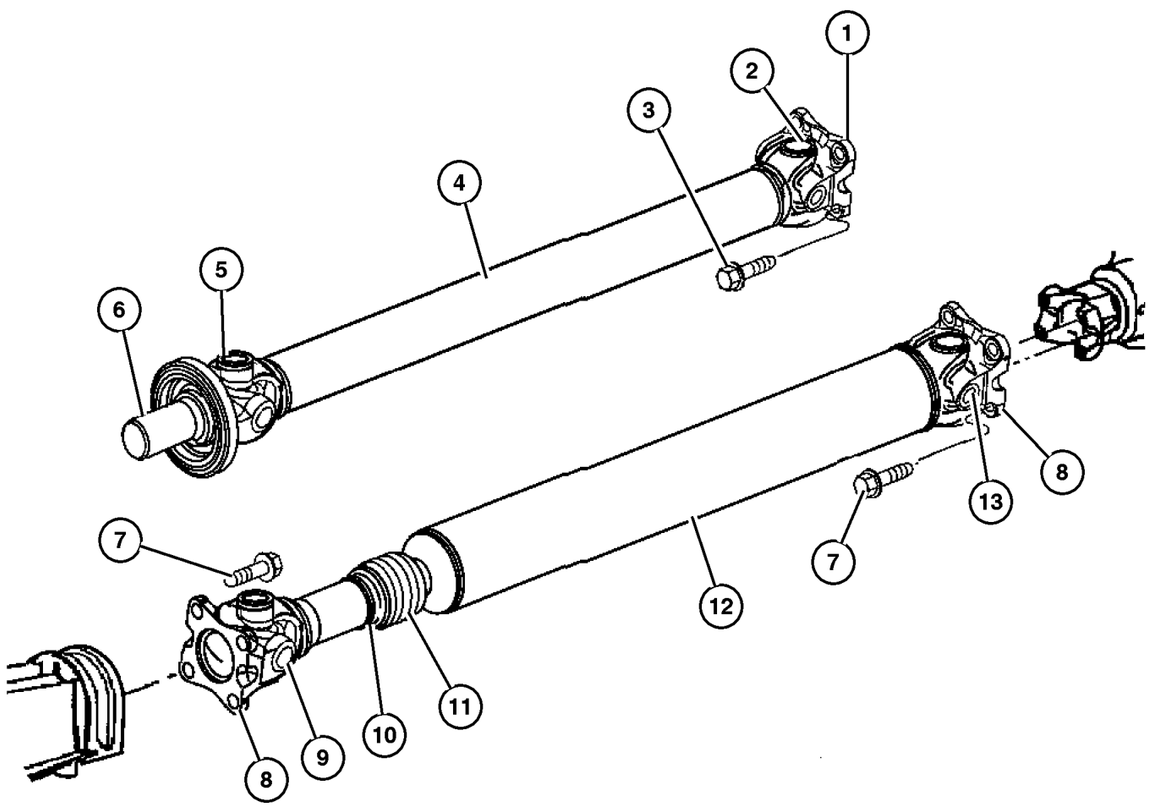

ITEM	PART NUMBER	QTY	LINE	SERIES	BODY	ENGINE	TRANS	TRIM	DESCRIPTION
1	5103 372AA	1	T			EK0	DG0		FLANGE, Drive Shaft, Rear
2	5015 694AA	2	T			EK0	DG0		U JOINT, Front or Rear
3	6506 497AA	4	T				DG6, DGV		BOLT, Hex Head, M12, Drive Shaft to Rear Axle Flange, Mounting
4	52853 118AC	1	T			EK0	DG0		SHAFT, Drive, Rear 1-Piece
5	J320 7886	4	T			EK0	DG0		RING, U Joint
6	5103 210AA	1	T			EK0	DG0		YOKE, Drive Shaft
7	6506 497AA	8	T				DBB		BOLT, Hex Head, M12, Drive Shaft to Rear Axle Flange, Mounting
8	5103 372AA	2	T			EK0	DBB		FLANGE, Drive Shaft, Front or Rear
9	J320 7886	4	T			EK0	DBB		RING, U Joint
10									CLAMP, Boot
	5013 626AA	1	T			EK0	DBB		Small
	5013 625AA	1	T			EK0	DBB		Large
11	5083 001AA	1	T			EK0	DBB		BOOT, Drive Shaft
12	52853 140AC	1	T			EK0	DBB		SHAFT, Drive, Rear 1-Piece
13	5015 694AA	2	T			EK0	DBB		U JOINT, Front or Rear

2006 Liberty (KJ)

SERIES	LINE	BODY	ENGINE	TRANSMISSION
H =HIGHLINE	T =JEEP - 2WD	74 =SPORT UTILITY 4-DR	EKG=3.7L V6 Eng.	DG6=4-Spd. Auto. 42RLE Trans.
M =MEDIUM	J =JEEP - 4WD		ENR=2.8L 4 Cyl Turbo Diesel Eng.	DGV=4-Spd. Auto. VLP Trans.
P =PREMIUM	U =JEEP - 4WD (RHD)		ENJ=2.5L 4 Cyl 16V Turbo Diesel Eng.	DGQ=5-Spd Auto. 5-45RFE Trans.
			ED1=2.4L 4 Cyl DOHC 16v SMPI Eng.	DEH=6-Speed Man. NSG370 Trans.
				DDD=5-Speed HD Man. Trans.
				DDK=5-Speed HD Man. Trans.

Propeller Shaft,4 Wheel Drive
Figure 016-120

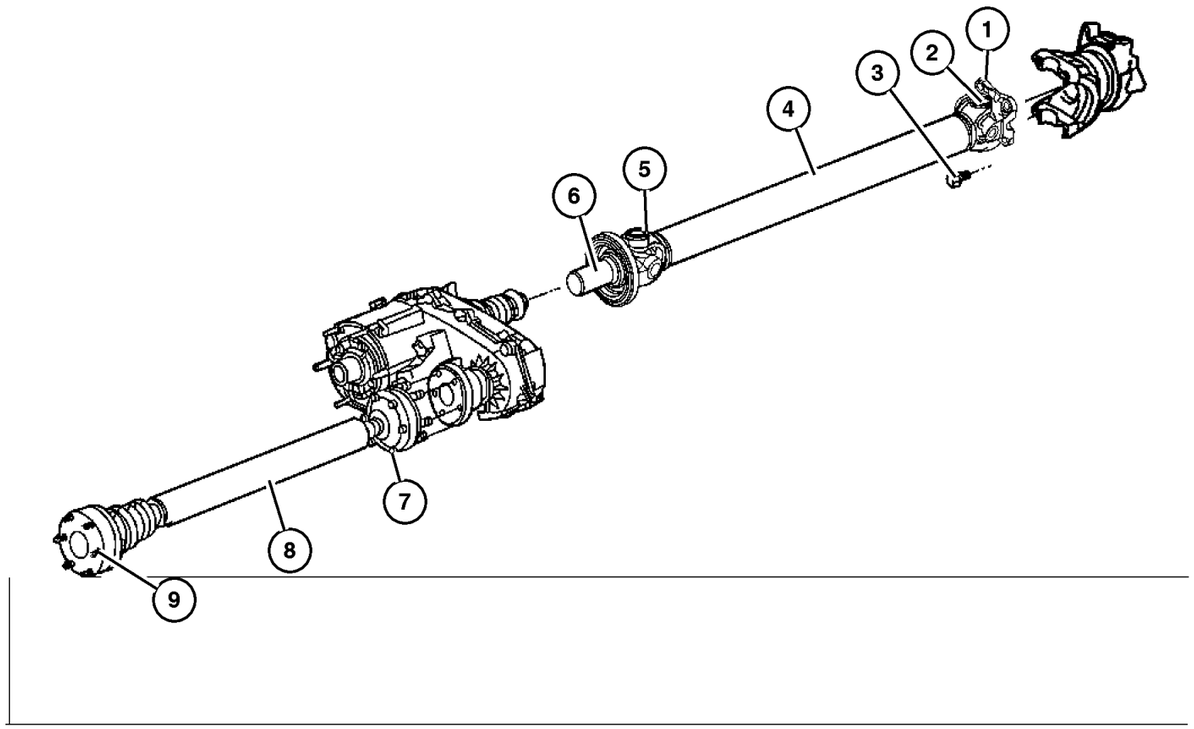

ITEM	PART NUMBER	QTY	LINE	SERIES	BODY	ENGINE	TRANS	TRIM	DESCRIPTION
Note:Sales Codes									
Note:Items 7,9 that one part number consists of 2 bolts and 1 strap									
[DBB]=Transmissions - All Manual									
[DG0]= Transmissions - All Automatic									
[DHE]=Transfer Case - Manual Shift-On-The-Fly									
[DHN]=Command-Trac Part Time 4WD Systen									
[DHP]= Selec-Trac Full Time 4WD System									
[DRA]= Corporate 8.25 Rear Axle									
1									FLANGE, Drive Shaft
	5103 372AA	1	J, U			EN0	DBB		[DHE,DRA], Rear
		1	J, U			EK0	DBB		[DHE], Rear
		1	J, U			EK0	DG0		[DHN,DHP], Rear
		1	J, U			EN0	DG0		[DHP,DRA], Rear
2									U JOINT
	5014 733AA	1	J, U			EN0	DBB		[DHE,DRA], Front
	5015 694AA	1	J, U			EN0	DBB		[DHE,DRA], Rear
	5014 733AA	1	J, U			EK0	DBB		[DHE], Front
	5015 694AA	1	J, U			EK0	DBB		[DHE], Rear
		2	J, U			EK0	DG0		[DHN,DHP], Front or Rear
		2	J, U			EN0	DG0		[DHP,DRA], Front or Rear
3	6506 497AA	4	J, U						BOLT, Hex Head, M12, To Rear Axle Flange
4									SHAFT, Drive, Rear 1-Piece
	52853 362AB	1	J, U			EN0	DBB		[DHE,DRA]
	52853 357AC	1	J, U			EK0	DBB		[DHE]
	52853 119AC	1	J, U			EK0	DG0		[DHN,DHP]
	52853 130AD	1	J, U			EN0	DG0		[DHP,DRA]
5									RING, U Joint
	J320 7886	4	J, U			EN0	DBB		[DHE,DRA]
		4	J, U			EK0	DBB		[DHE]
		4	J, U			EK0	DG0		[DHN,DHP]
		4	J, U			EN0	DG0		[DHP,DRA]
6									YOKE, Drive Shaft
	5014 043AA	1	J, U			EN0	DBB		[DHE,DRA]
		1	J, U			EK0	DBB		[DHE]
	5093 961AB	1	J, U			EK0	DG0		[DHN,DHP]
	5143 207AA	1	J, U			EN0	DG0		[DHP,DRA]
7									BOLT AND WASHER, Part Number Has 1 strap and 2 Bolts
	5015 109AA	3	J, U			EN0	DBB		To Transfer Case Yoke
		3	J, U			EN0	DG0		To Transfer Case Yoke
		3	J, U			EK0			To Transfer Case Yoke
8									SHAFT, Drive, Front

2006 Liberty (KJ)

SERIES	LINE	BODY	ENGINE	TRANSMISSION
H =HIGHLINE	T =JEEP - 2WD	74 =SPORT UTILITY 4-DR	EKG=3.7L V6 Eng.	DG6=4-Spd. Auto. 42RLE Trans.
M =MEDIUM	J =JEEP - 4WD		ENR=2.8L 4 Cyl Turbo Diesel Eng.	DGV=4-Spd. Auto. VLP Trans.
P =PREMIUM	U =JEEP - 4WD (RHD)		ENJ=2.5L 4 Cyl 16V Turbo Diesel Eng.	DGQ=5-Spd Auto. 5-45RFE Trans.
			ED1=2.4L 4 Cyl DOHC 16v SMPI Eng.	DEH=6-Speed Man. NSG370 Trans.
				DDD=5-Speed HD Man. Trans.
				DDK=5-Speed HD Man. Trans.

Propeller Shaft,4 Wheel Drive
Figure 016-120

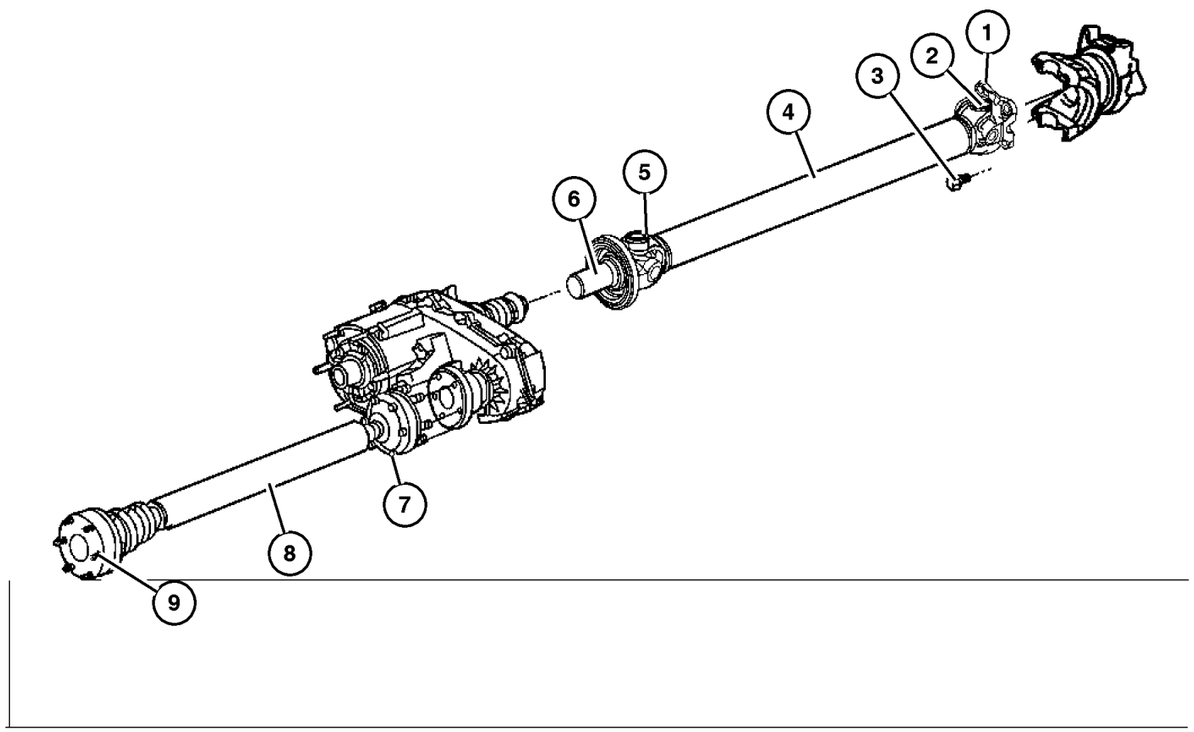

ITEM	PART NUMBER	QTY	LINE	SERIES	BODY	ENGINE	TRANS	TRIM	DESCRIPTION
	52111 591AB	1	J, U			EN0	DBB		
	52111 593AB	1	J, U			EN0	DG0		
	52111 596AB	1	J, U			EK0			
9									BOLT AND WASHER, Part Number Has 1 strap and 2 Bolts
	5015 996AA	3	J, U			EN0	DBB		To Front Axle Yoke
		3	J, U			EN0	DG0		To Front Axle Yoke
		3	J, U			EK0			To Front Axle Yoke

2006 Liberty (KJ)

SERIES	LINE	BODY	ENGINE	TRANSMISSION
H =HIGHLINE	T =JEEP - 2WD	74 =SPORT UTILITY 4-DR	EKG=3.7L V6 Eng.	DG6=4-Spd. Auto. 42RLE Trans.
M =MEDIUM	J =JEEP - 4WD		ENR=2.8L 4 Cyl Turbo Diesel Eng.	DGV=4-Spd. Auto. VLP Trans.
P =PREMIUM	U =JEEP - 4WD (RHD)		ENJ=2.5L 4 Cyl 16V Turbo Diesel Eng.	DGQ=5-Spd Auto. 5-45RFE Trans.
			ED1=2.4L 4 Cyl DOHC 16v SMPI Eng.	DEH=6-Speed Man. NSG370 Trans.
				DDD=5-Speed HD Man. Trans.
				DDK=5-Speed HD Man. Trans.

Group – 017

Rear Suspension

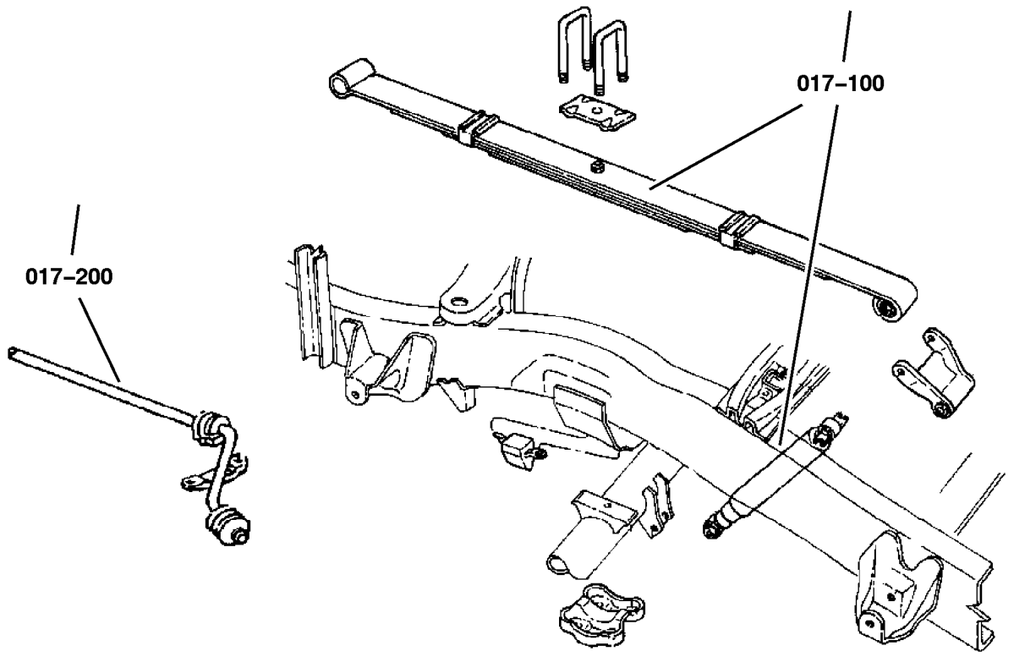

017–100 Rear Suspension	017–200 Rear Stabilizer		
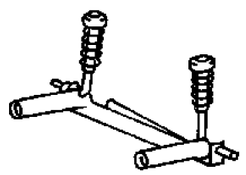	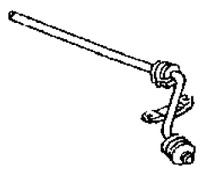		

GROUP 17 - Rear Suspension

Illustration Title — Group-Fig. No.

Rear Suspension

Suspension,Rear and Shock . . . . . Fig. 017-110

Rear Stabilizer

Stabilizer Bar,Rear . . . . . Fig. 017-210

Suspension,Rear and Shock
Figure 017-110

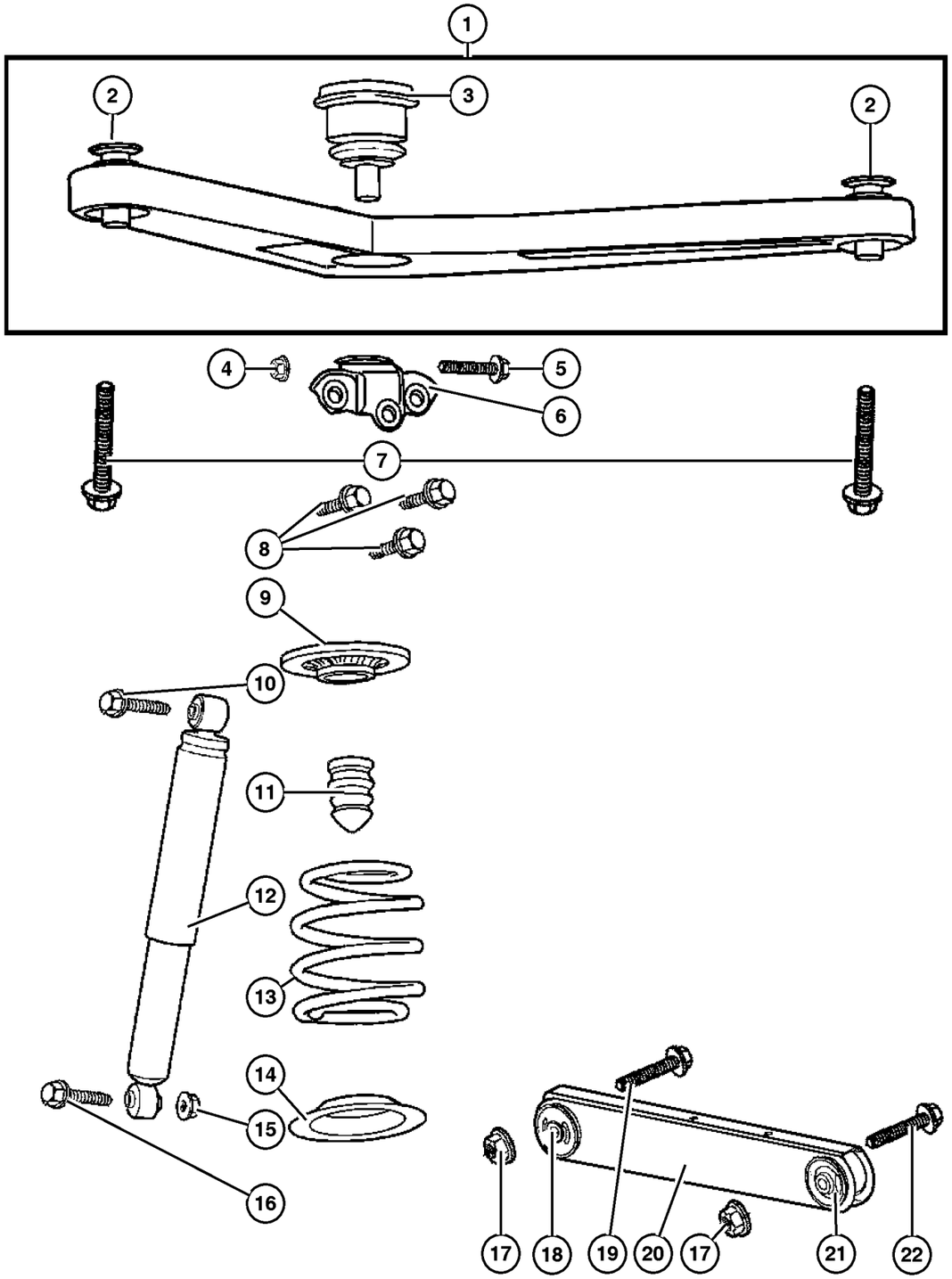

ITEM	PART NUMBER	QTY	LINE	SERIES	BODY	ENGINE	TRANS	TRIM	DESCRIPTION
Note:Sales Codes;									
[ZCT] Through [ZRV] = Spring Sales Codes will be found on Vehicle Identification Number [VIN] Sales Code Listing									
1	52088 901AD	1							ARM, Upper Control, Rear
2	5208 8425	2							BUSHING, Control Arm
3	52088 647AB	1							BALL JOINT, Upper Control Arm
4	6503 711	1							NUT, Hex Flange, M12x1.75, Ball Joint to Bracket, Mounting
5	6503 610	2							BOLT, Hex Flange Head, M12-1.75x62.0, UCA to Axle Bracket, Mounting
6	52128 586AA	1							BRACKET, Ballstud
7	6504 748	2							SCREW, Hex Flange Head, M12x1.75x117, UCA to Body, Mounting
8	6505 445AA	3							BOLT
9	52088 707AA	2							ISOLATOR, Spring, Upper
10	6506 147AA	2							SCREW, Hex Flange Head, M12x1.75x80, Shock Mounting, Upper
11	52088 705AE	2							BUMPER, Jounce
12	52088 673AE	2							SHOCK ABSORBER, Suspension, Rear
13									SPRING, Suspension, Rear
	52128 869AA	1							[ZCT,ZRT]
	52128 870AA	1							[ZCU,ZRU]
	52128 871AA	1							[ZCV,ZRV]
	52128 872AA	1							[ZCW,ZRW]
14	52128 524AA	2							ISOLATOR, Spring, Lower
15	6502 697	2							NUT, Hex Flange Lock, M12x1.75, Shock Mounting, Lower
16	6505 935AA	2							SCREW, Shock Mounting, Lower
17									NUT, M14X2
	6102 251AA	2							LCA to Axle
		2							LCA to Body
18	52129 094AA	2							BUSHING, Control Arm
19	6504 408	2							BOLT, LCA to Axle, Mounting
20	52128 866AA	2							ARM, Lower Control, Rear, Includes Items 18,21
21	52128 864AA	2							BUSHING, Control Arm, LCA to Body, Mounting
22	6506 033AA	2							BOLT, Hex Flange Head, M14x2.0x105, LCA to Body, Mounting

2006 Liberty (KJ)

SERIES	LINE	BODY	ENGINE	TRANSMISSION
H =HIGHLINE	T =JEEP - 2WD	74 =SPORT UTILITY 4-DR	EKG=3.7L V6 Eng.	DG6=4-Spd. Auto. 42RLE Trans.
M =MEDIUM	J =JEEP - 4WD		ENR=2.8L 4 Cyl Turbo Diesel Eng.	DGV=4-Spd. Auto. VLP Trans.
P =PREMIUM	U =JEEP - 4WD (RHD)		ENJ=2.5L 4 Cyl 16V Turbo Diesel Eng.	DGQ=5-Spd Auto. 5-45RFE Trans.
			ED1=2.4L 4 Cyl DOHC 16v SMPI Eng.	DEH=6-Speed Man. NSG370 Trans.
				DDD=5-Speed HD Man. Trans.
				DDK=5-Speed HD Man. Trans.

Stabilizer Bar,Rear
Figure 017-210

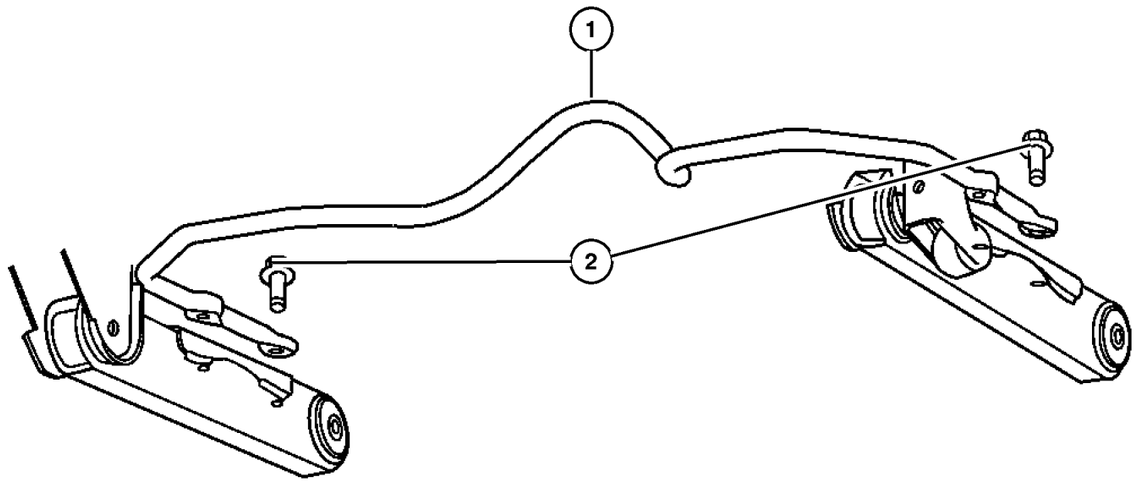

ITEM	PART NUMBER	QTY	LINE	SERIES	BODY	ENGINE	TRANS	TRIM	DESCRIPTION
1	52088 677AA	1							STABILIZER BAR, Rear Suspension
2	6101 844	4							SCREW AND WASHER, Hex Head, M12x1.75x50, Stabilizer Bar to LCA, Mounting

2006 Liberty (KJ)

SERIES	LINE	BODY	ENGINE	TRANSMISSION
H =HIGHLINE	T =JEEP - 2WD	74 =SPORT UTILITY 4-DR	EKG=3.7L V6 Eng.	DG6=4-Spd. Auto. 42RLE Trans.
M =MEDIUM	J =JEEP - 4WD		ENR=2.8L 4 Cyl Turbo Diesel Eng.	DGV=4-Spd. Auto. VLP Trans.
P =PREMIUM	U =JEEP - 4WD (RHD)		ENJ=2.5L 4 Cyl 16V Turbo Diesel Eng.	DGQ=5-Spd Auto. 5-45RFE Trans.
			ED1=2.4L 4 Cyl DOHC 16v SMPI Eng.	DEH=6-Speed Man. NSG370 Trans.
				DDD=5-Speed HD Man. Trans.
				DDK=5-Speed HD Man. Trans.

Group – 019
Steering

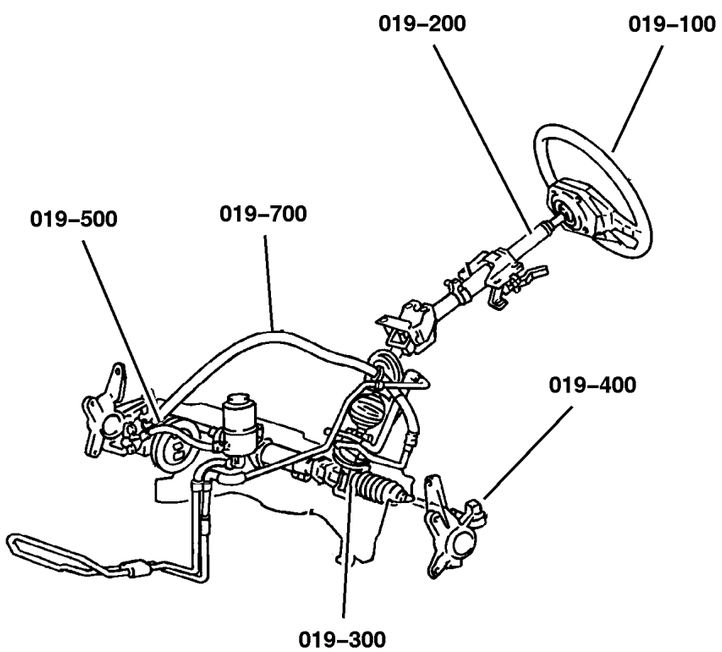

019–100 Steering Wheel	019–200 Steering Column	019–300 Steering Gear	019–500 Power Steering Pump
	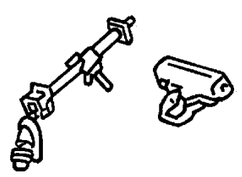	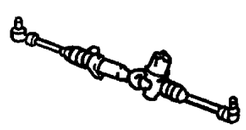	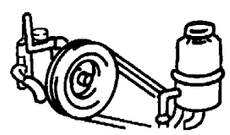
019–700 Power Steering Hoses 			

GROUP 19 - Steering

Illustration Title — Group-Fig. No.

Steering Wheel
Steering Wheel . . . . . Fig. 019-110

Steering Column
Column,Steering . . . . . Fig. 019-210

Steering Gear
Gear Assembly,Steering,Rack and Pinion . . . . . Fig. 019-310

Power Steering Pump
Pump,Power Steering 2.8L [EN0] . . . . . Fig. 019-520
Pump,Power Steering 3.7L [EK0] . . . . . Fig. 019-530

Power Steering Hoses
Hoses and Reservoir, LHD 2.8L [EN0] . . . . . Fig. 019-710
Hoses and Reservior, RHD 2.8L [EN0] . . . . . Fig. 019-720
Hoses and Reservior,LHD 3.7L [EK0] . . . . . Fig. 019-730
Hoses and Reservior RHD 3.7L [EK0] . . . . . Fig. 019-740

Steering Wheel
Figure 019-110

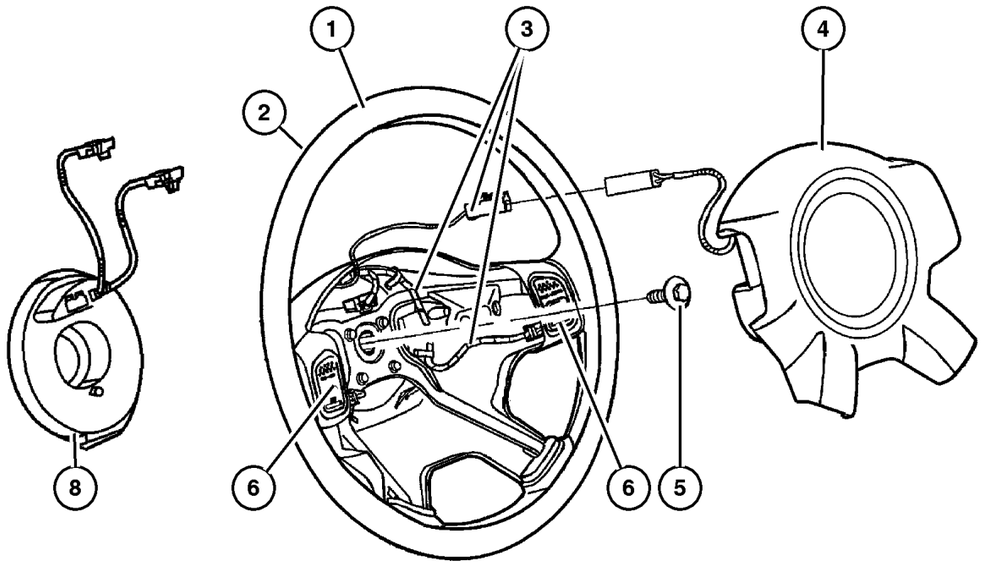

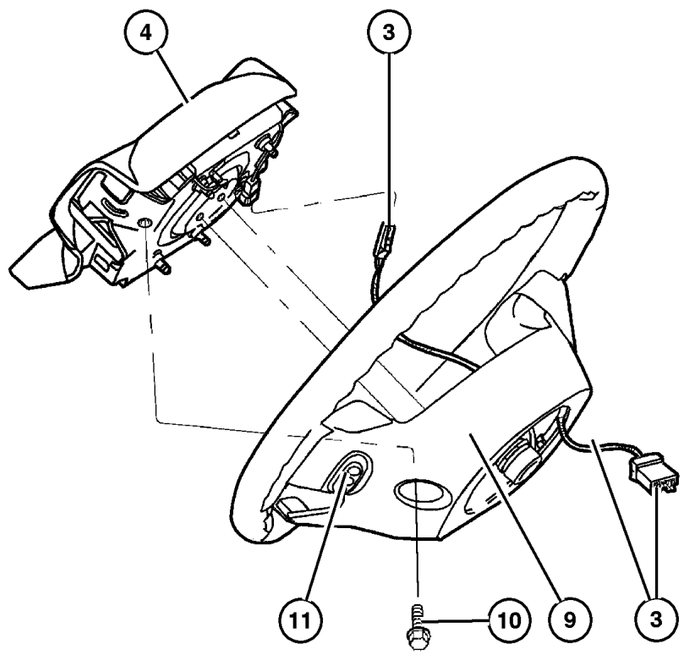

ITEM	PART NUMBER	QTY	LINE	SERIES	BODY	ENGINE	TRANS	TRIM	DESCRIPTION
Note Sale Codes: SCD=Luxury Steering Wheel									
SCG=Leather Wrapped Steering Wheel									
NHM=Speed Control									
RDZ=Steering Wheel Mounted Audio Control									
1	5GG25 DX9AI	1							WHEEL, Steering
2									WHEEL, Steering, Leather
	UR67 1DHAE	1		P					[DB]
		1		M					[D5]
	UR67 1J8AE	1		P					[J1]
		1		M					[J1]
	UR67 1X9AE	1		H					[00]
3									WIRING, Steering Wheel
	52029 379AA	1		P					WITH CRUISE
		1		M					WITH CRUISE
		1		H					WITH CRUISE
	52029 381AA	1		H					W/CRUISE AND RADIO CONTROL
		1		M					W/CRUISE AND RADIO CONTROL
		1		P					W/CRUISE AND RADIO CONTROL
	52029 383AA	1							LUXURY STEERING WHEEL
4									AIR BAG, Driver
	5JS06 1DHAE	1		M, P					D5
	5JS06 1J8AE	1		M, P					J3
	5JS06 1X9AE	1		H					O0
5	6505 656AA	1							SCREW, Hex Flange Head, M10x1.5x35.
6									SWITCH, Speed Control
	1AZ50 1J8AB	1		M					J3, Right
	1AZ50 1DHAB	1		M					D5, Right
	1AZ50 DX9AB	1		H					00, Right
	1AZ51 1DHAB	1		M					DB, Left
	1AZ51 1J8AB	1		M					J1, Left
	1AZ51 DX9AB	1		H					00, Left
-7									BEZEL, Steering Wheel
	5GN02 DX9AA-	1							Right
	5GN03 DX9AA-	1							Left
8									CLOCKSPRING, THIS IS A 10 CIRCUIT CLOCKSPRING WITH STEERING ANGLE.
	56010 619AC	1							10 CIRCUIT W/ ELECTRONIC STABILITY PROGRAM

2006 Liberty (KJ)

SERIES	LINE	BODY	ENGINE	TRANSMISSION
H =HIGHLINE	T =JEEP - 2WD	74 =SPORT UTILITY 4-DR	EKG=3.7L V6 Eng.	DG6=4-Spd. Auto. 42RLE Trans.
M =MEDIUM	J =JEEP - 4WD		ENR=2.8L 4 Cyl Turbo Diesel Eng.	DGV=4-Spd. Auto. VLP Trans.
P =PREMIUM	U =JEEP - 4WD (RHD)		ENJ=2.5L 4 Cyl 16V Turbo Diesel Eng.	DGQ=5-Spd Auto. 5-45RFE Trans.
			ED1=2.4L 4 Cyl DOHC 16v SMPI Eng.	DEH=6-Speed Man. NSG370 Trans.
				DDD=5-Speed HD Man. Trans.
				DDK=5-Speed HD Man. Trans.

Steering Wheel
Figure 019-110

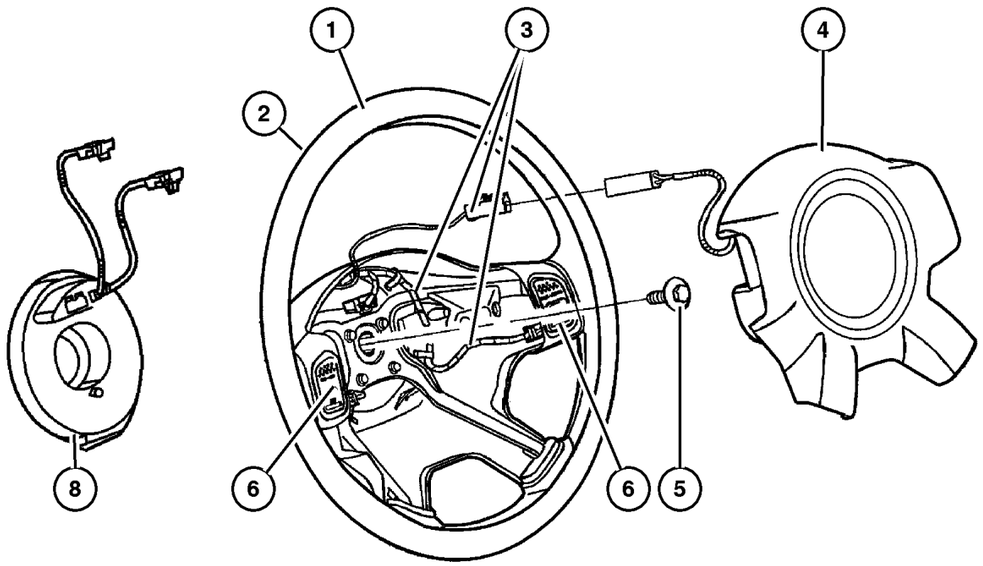

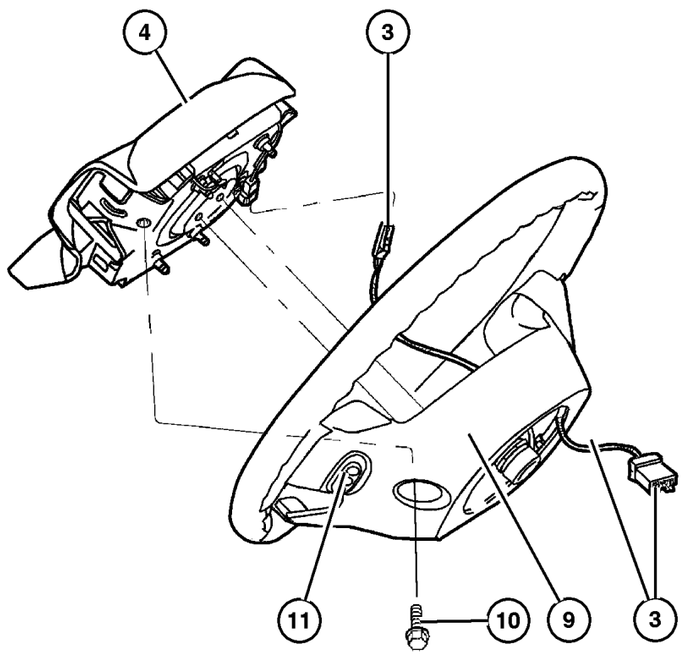

ITEM	PART NUMBER	QTY	LINE	SERIES	BODY	ENGINE	TRANS	TRIM	DESCRIPTION
	56044 886AC	1							10 CIRCUIT W/O ELECTRONIC
									STABILITY PROGRAM
9									COVER, Steering Wheel Back
	5083 981AA	1							
	5086 215AA	1		P					THIS COVER HAS THE HOLES
									FOR THE RADIO SWITCHES
		1		H					THIS COVER HAS THE HOLES
									FOR THE RADIO SWITCHES
		1		M					THIS COVER HAS THE HOLES
									FOR THE RADIO SWITCHES
10	6102 141AA	1							SCREW, M6x1x25
11									SWITCH, Remote Radio
	56042 312AB	1		H					Right
		1		M					Right
		1		P					Right
	56042 313AB	1		M					Left
		1		P					Left
		1		H					Left

2006 Liberty (KJ)

SERIES	LINE	BODY	ENGINE	TRANSMISSION
H =HIGHLINE	T =JEEP - 2WD	74 =SPORT UTILITY 4-DR	EKG=3.7L V6 Eng.	DG6=4-Spd. Auto. 42RLE Trans.
M =MEDIUM	J =JEEP - 4WD		ENR=2.8L 4 Cyl Turbo Diesel Eng.	DGV=4-Spd. Auto. VLP Trans.
P =PREMIUM	U =JEEP - 4WD (RHD)		ENJ=2.5L 4 Cyl 16V Turbo Diesel Eng.	DGQ=5-Spd Auto. 5-45RFE Trans.
			ED1=2.4L 4 Cyl DOHC 16v SMPI Eng.	DEH=6-Speed Man. NSG370 Trans.
				DDD=5-Speed HD Man. Trans.
				DDK=5-Speed HD Man. Trans.

Column,Steering
Figure 019-210

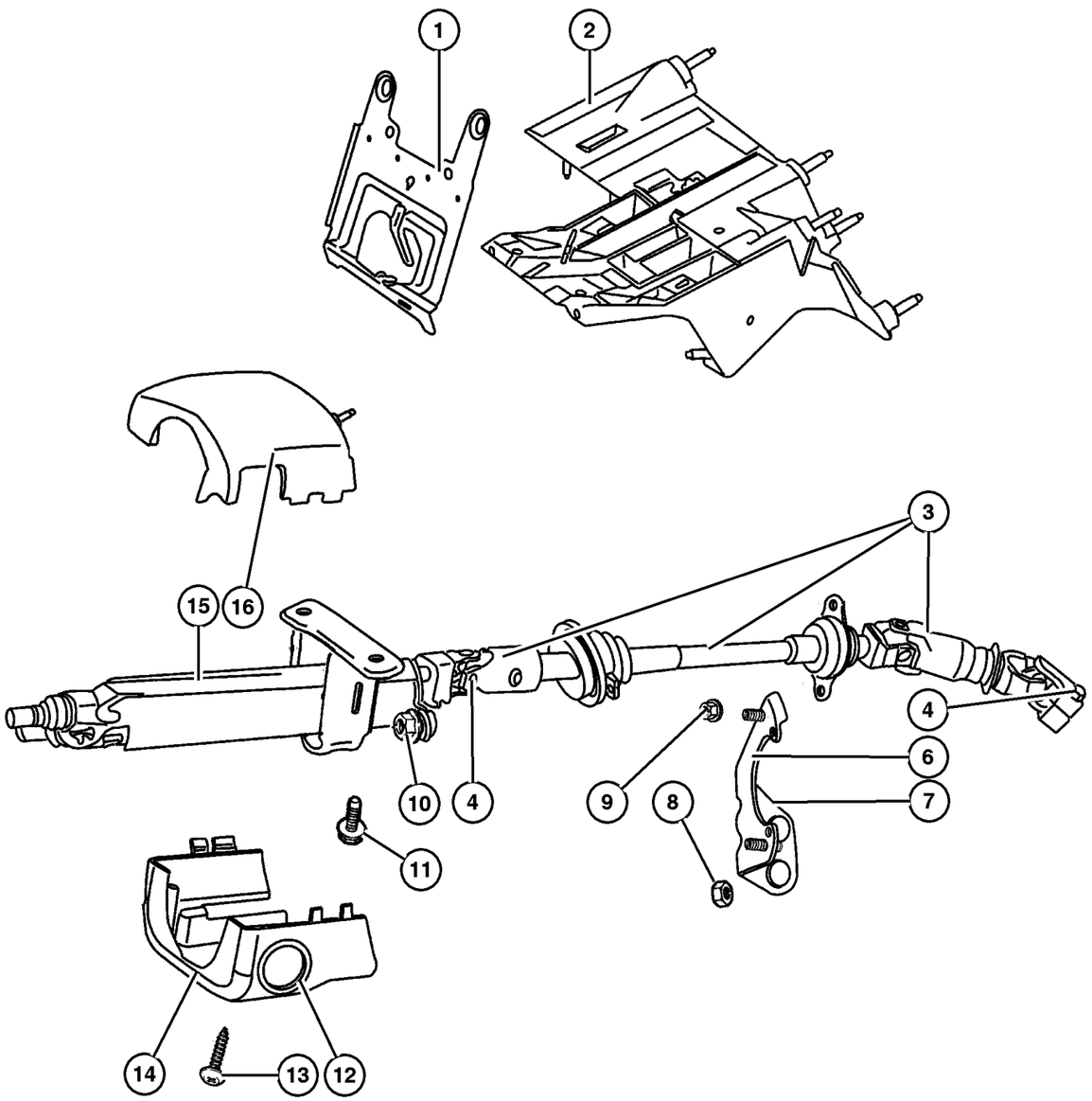

ITEM	PART NUMBER	QTY	LINE	SERIES	BODY	ENGINE	TRANS	TRIM	DESCRIPTION
Note:Sales Codes; SBA=Power Rack and Pinion Steering									
SUA=Ttilt Steering Column									
1									BRACKET, Steering Column
	55314 992AB	1	J, T						
	55315 011AB	1	U						
2									BRACKET, Steering Column
	55314 987AB	1	J, T						
	55314 988AB	1	U						
3									SHAFT, Intermediate
	55315 022AE	1	J, T						
	55315 058AA	1	U			EN0			Lower
	55315 024AD	1	U			ED0, EK0			
	55315 057AC	1	U			EN0			Upper
4	6504 926AA	2							SCREW, Hex Flange Head, M10x1.5x40
-5	6502 808	2	U						SCREW, M6x1x25, Intermediate Shaft Bracket
6	55315 003AB	1	J, T						BRACKET, Intermediate Shaft
7	55315 009AA	1	U						BRACKET, Steering Column
8	6100 048	2							NUT, Hex, M6x1.00
9	6100 516	2							NUT, Hex Flange Lock, M6 Phosphate, Bearing to Bracket
10	6503 182	2							NUT AND WASHER, Hex Lock Nut-Coned Teeth Washer, M8 x 1.25
11	6506 128AA	2							SCREW AND WASHER, Hex Head
12									TRIM RING, Ignition Key Cylinder, (NOT REQUIRED)
13									SCREW AND WASHER, Pan Head
	6036 381AA	2	U						
		2	J, T						
14									SHROUD, Steering Column, Lower
	5GE04 DX9AB	1		H			DBB		[00] Black, Lower
	5GE04 XDHAB	1		M, P			DBB		[D5] SlateGray, Lower
	5GE04 ZJ8AB	1		M, P			DBB		[J1] DK Khaki, Lower
	5GE08 DX9AB	1		H			DG0		[00] Black, Lower
	5GE08 XDHAB	1		M, P			DG0		[D5] SlateGray, Lower
	5GE08 ZJ8AB	1		M, P			DG0		[J1] DK Khaki, Lower
15									COLUMN, Steering, Tilt
	5057 082AB	1					DBB		With [ABB] & [DBB]
	5057 080AB	1					DBB		Without [ABB] & [DBB]
	5057 081AB	1					DG0		With [ABB] & [DG0]

2006 Liberty (KJ)

SERIES	LINE	BODY	ENGINE	TRANSMISSION
H =HIGHLINE	T =JEEP - 2WD	74 =SPORT UTILITY 4-DR	EKG=3.7L V6 Eng.	DG6=4-Spd. Auto. 42RLE Trans.
M =MEDIUM	J =JEEP - 4WD		ENR=2.8L 4 Cyl Turbo Diesel Eng.	DGV=4-Spd. Auto. VLP Trans.
P =PREMIUM	U =JEEP - 4WD (RHD)		ENJ=2.5L 4 Cyl 16V Turbo Diesel Eng.	DGQ=5-Spd Auto. 5-45RFE Trans.
			ED1=2.4L 4 Cyl DOHC 16v SMPI Eng.	DEH=6-Speed Man. NSG370 Trans.
				DDD=5-Speed HD Man. Trans.
				DDK=5-Speed HD Man. Trans.

Column,Steering
Figure 019-210

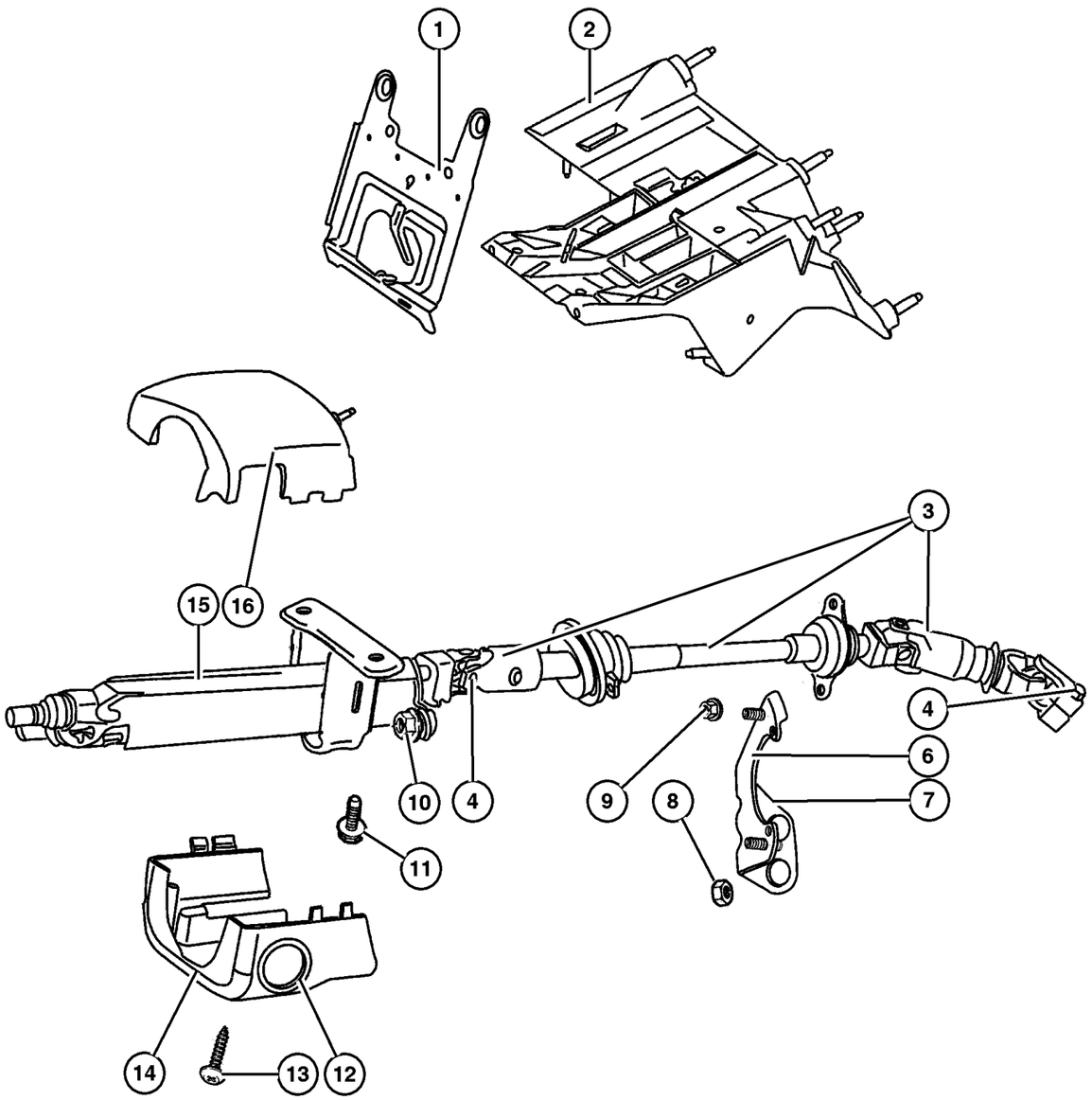

ITEM	PART NUMBER	QTY	LINE	SERIES	BODY	ENGINE	TRANS	TRIM	DESCRIPTION
	5057 079AB	1					DG0		Without [ABB] & [DG0]
16									SHROUD, Steering Column, Upper
	1CA79 DX9AC	1		H			DBB		[00] BLACK
	1CA79 XDHAC	1		M, P			DG0		[D5] SLATE GRAY
	1CA79 ZJ8AC	1		M, P			DG0		[J1] DK. KHAKI
	5GK59 DX9AD	1		H			DG0		[00] BLACK
	5GK59 XDHAD	1		M, P			DBB		[D5] SLATE GRAY
	5GK59 ZJ8AD	1		M, P			DBB		[J3] DK. KHAKI

2006 Liberty (KJ)

SERIES	LINE	BODY	ENGINE	TRANSMISSION
H =HIGHLINE	T =JEEP - 2WD	74 =SPORT UTILITY 4-DR	EKG=3.7L V6 Eng.	DG6=4-Spd. Auto. 42RLE Trans.
M =MEDIUM	J =JEEP - 4WD		ENR=2.8L 4 Cyl Turbo Diesel Eng.	DGV=4-Spd. Auto. VLP Trans.
P =PREMIUM	U =JEEP - 4WD (RHD)		ENJ=2.5L 4 Cyl 16V Turbo Diesel Eng.	DGQ=5-Spd Auto. 5-45RFE Trans.
			ED1=2.4L 4 Cyl DOHC 16v SMPI Eng.	DEH=6-Speed Man. NSG370 Trans.
				DDD=5-Speed HD Man. Trans.
				DDK=5-Speed HD Man. Trans.

Gear Assembly,Steering,Rack and Pinion
Figure 019-310

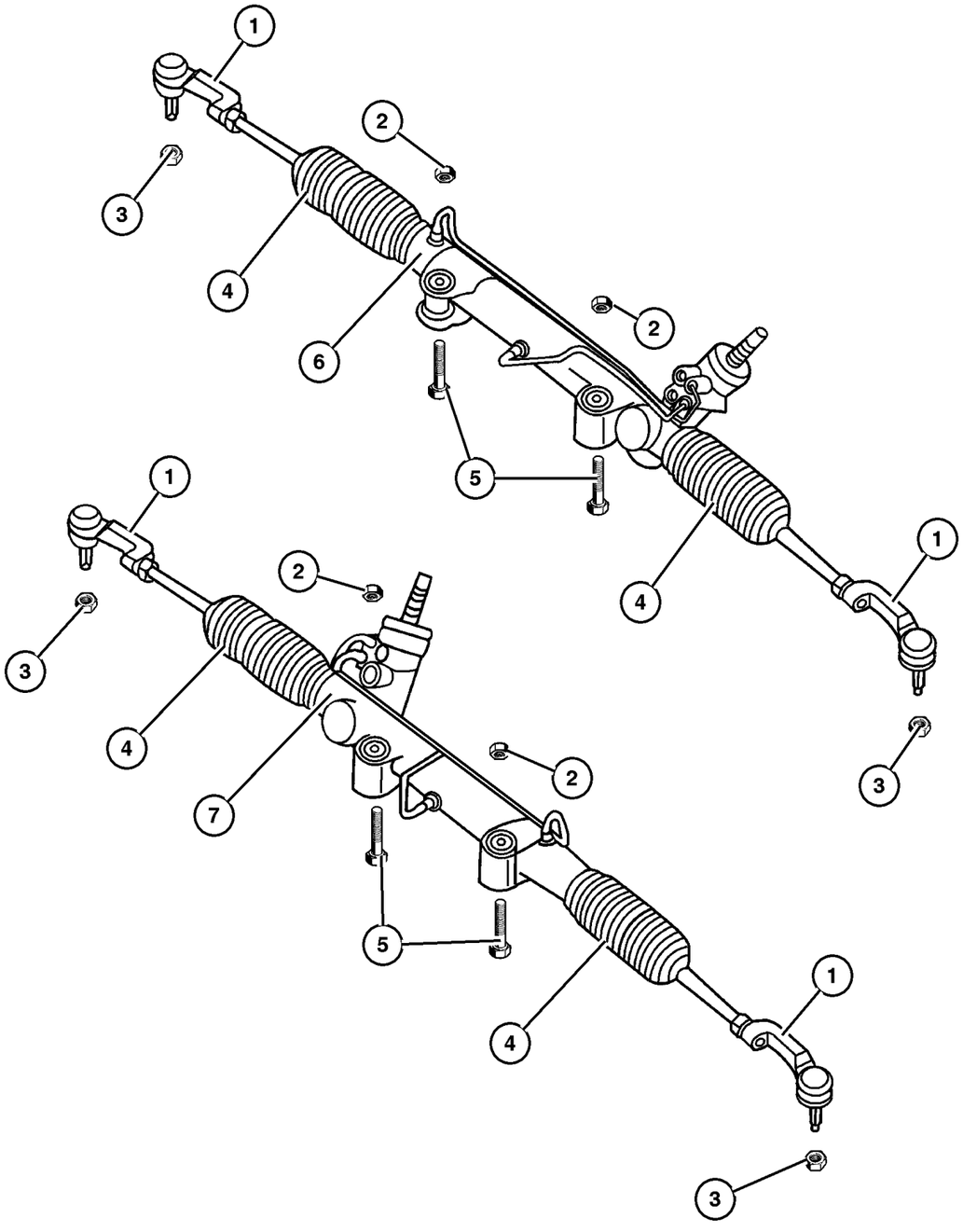

ITEM	PART NUMBER	QTY	LINE	SERIES	BODY	ENGINE	TRANS	TRIM	DESCRIPTION
Note:Sales Codes									
[ED0]=Engines - All 2.2, 2.5, 2.4L 4 Cylinder Gas									
[EK0]=Engines - All 3.7L 6 Cylinder Gas									
[EN0]=Engines - All 4/5 Cylinder Turbo Diesel									
1									END, Tie Rod
	5189 419AA	1	J, T						
		1	U			EK0			
		1	U			EN0			
2	6504 707	2							NUT, Gear to Cradle
3	6505 623AA	2							NUT AND WASHER, Tie Rod, Mounting
4									BOOT KIT, Steering Gear
	5189 417AA	1	J, T						
		1	U			EK0			
		1	U			EN0			
5	6506 517AA	2							BOLT AND WASHER, Gear to Cradle
6	52109 970AA	1	J, T						RACK, Steering Gear
7									RACK, Steering Gear
	52109 971AA	1	U			EK0			
	52109 972AA	1	U			EN0			

2006 Liberty (KJ)

SERIES	LINE	BODY	ENGINE	TRANSMISSION
H =HIGHLINE	T =JEEP - 2WD	74 =SPORT UTILITY 4-DR	EKG=3.7L V6 Eng.	DG6=4-Spd. Auto. 42RLE Trans.
M =MEDIUM	J =JEEP - 4WD		ENR=2.8L 4 Cyl Turbo Diesel Eng.	DGV=4-Spd. Auto. VLP Trans.
P =PREMIUM	U =JEEP - 4WD (RHD)		ENJ=2.5L 4 Cyl 16V Turbo Diesel Eng.	DGQ=5-Spd Auto. 5-45RFE Trans.
			ED1=2.4L 4 Cyl DOHC 16v SMPI Eng.	DEH=6-Speed Man. NSG370 Trans.
				DDD=5-Speed HD Man. Trans.
				DDK=5-Speed HD Man. Trans.

Pump,Power Steering 2.8L [EN0]
Figure 019-520

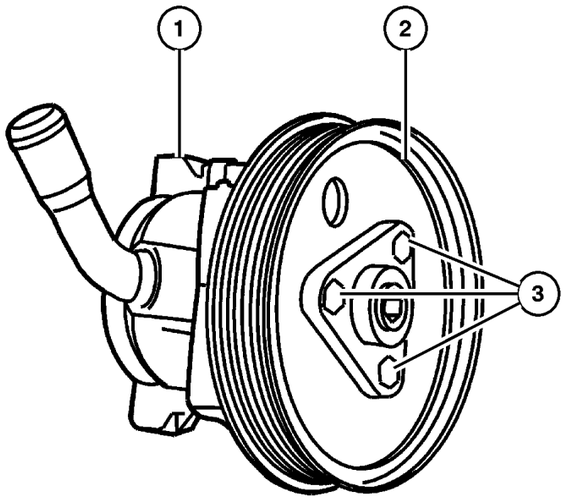

ITEM	PART NUMBER	QTY	LINE	SERIES	BODY	ENGINE	TRANS	TRIM	DESCRIPTION
Note:Sales Codes;									
[DBB]=Transmissions - All Manual									
[EN0]=Engines - All 4/5 Cylinder Turbo Diesel									
1									PUMP, Power Steering
	52088 712AC	1				EN0	DBB		High Temperature
		1				EN0	DG0		
2	5072 441AA	1				EN0	DG0		PULLEY, Power Steering Pump
3									BOLT
	5003 554AB	1				EN0	DG0		
		1				EN0	DBB		
-4									BRACKET, Tensioner
	5093 935AA-	1				EN0	DG0		
		1				EN0	DBB		
-5									SCREW
	5066 986AA-	1				EN0	DBB		
		1				EN0	DG0		
-6									BRACKET, Power Steering
	52089 289AA-	1	J			EN0			
		1	U			EN0			

2006 Liberty (KJ)

SERIES	LINE	BODY	ENGINE	TRANSMISSION
H =HIGHLINE	T =JEEP - 2WD	74 =SPORT UTILITY 4-DR	EKG=3.7L V6 Eng.	DG6=4-Spd. Auto. 42RLE Trans.
M =MEDIUM	J =JEEP - 4WD		ENR=2.8L 4 Cyl Turbo Diesel Eng.	DGV=4-Spd. Auto. VLP Trans.
P =PREMIUM	U =JEEP - 4WD (RHD)		ENJ=2.5L 4 Cyl 16V Turbo Diesel Eng.	DGQ=5-Spd Auto. 5-45RFE Trans.
			ED1=2.4L 4 Cyl DOHC 16v SMPI Eng.	DEH=6-Speed Man. NSG370 Trans.
				DDD=5-Speed HD Man. Trans.
				DDK=5-Speed HD Man. Trans.

Pump,Power Steering 3.7L [EK0]
Figure 019-530

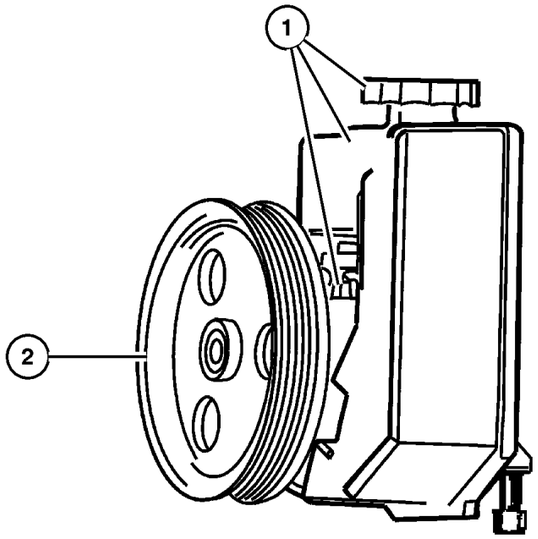

ITEM	PART NUMBER	QTY	LINE	SERIES	BODY	ENGINE	TRANS	TRIM	DESCRIPTION
Note:Sales Codes:									
[EK0]=Engines - All 3.7L 6 Cylinder Gas									
1	52088 710AE	1				EK0			PUMP, Power Steering
2	53010 258AC	1				EK0			PULLEY, Power Steering Pump
-3	6102 045AA-	3				EK0			SCREW AND WASHER, Hex Head, Power Steering Pump Mounting

2006 Liberty (KJ)

SERIES	LINE	BODY	ENGINE	TRANSMISSION
H =HIGHLINE	T =JEEP - 2WD	74 =SPORT UTILITY 4-DR	EKG=3.7L V6 Eng.	DG6=4-Spd. Auto. 42RLE Trans.
M =MEDIUM	J =JEEP - 4WD		ENR=2.8L 4 Cyl Turbo Diesel Eng.	DGV=4-Spd. Auto. VLP Trans.
P =PREMIUM	U =JEEP - 4WD (RHD)		ENJ=2.5L 4 Cyl 16V Turbo Diesel Eng.	DGQ=5-Spd Auto. 5-45RFE Trans.
			ED1=2.4L 4 Cyl DOHC 16v SMPI Eng.	DEH=6-Speed Man. NSG370 Trans.
				DDD=5-Speed HD Man. Trans.
				DDK=5-Speed HD Man. Trans.

Hoses and Reservoir, LHD 2.8L [EN0]
Figure 019-710

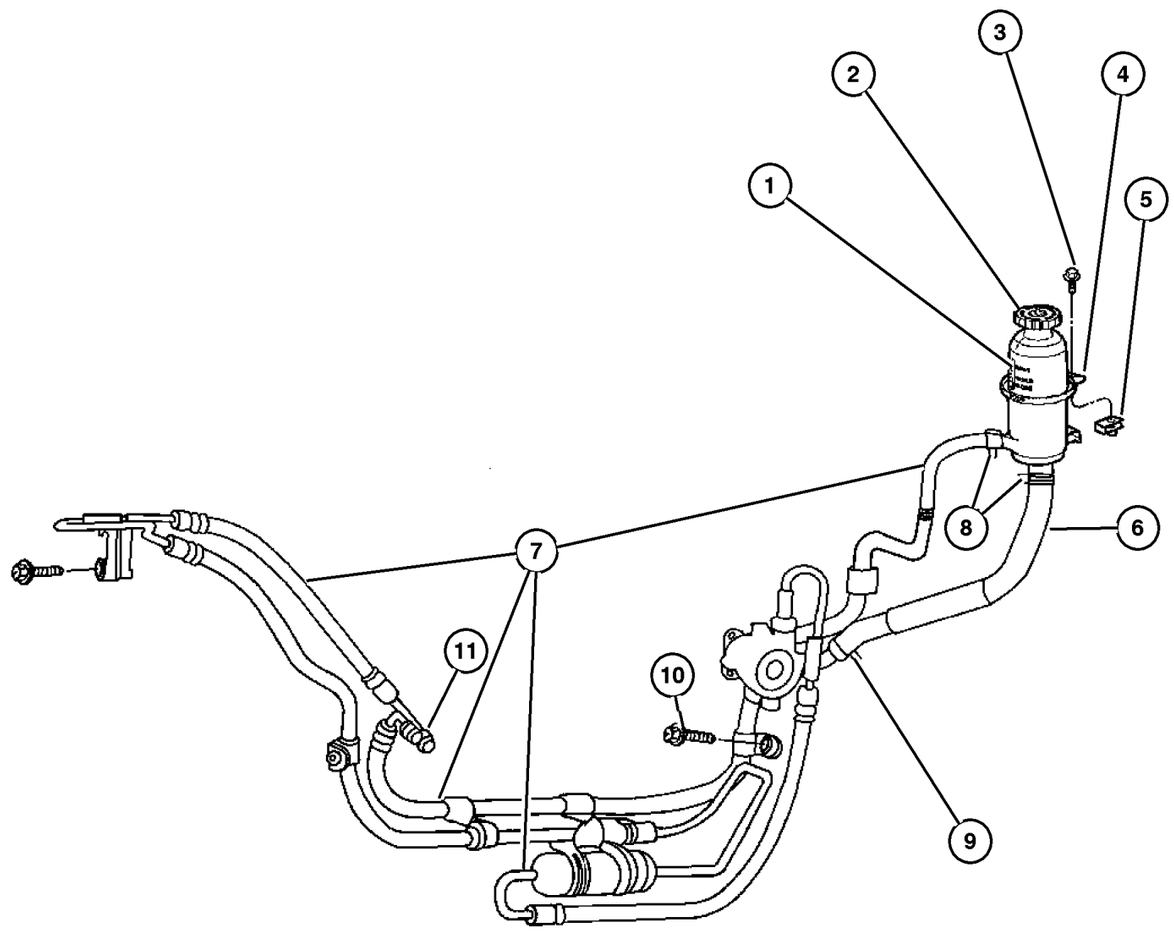

ITEM	PART NUMBER	QTY	LINE	SERIES	BODY	ENGINE	TRANS	TRIM	DESCRIPTION
Note: Sales Codes;									
[EN0]=Engines - All 4/5 Cylinder Turbo Diesel									
1	52088 713AA	1				EN0			RESERVOIR, Power Steering Pump, Includes Item 3
2	52128 513AA	1				EN0			CAP, Power Steering Reservoir
3	6102 132AA	1				EN0			SCREW, Hex Head, M6x1x20, Reservoir to Bracket
4	52088 874AD	1				EN0			BRACKET, Power Steering Reservoir
5	6502 726	3				EN0			NUT
6	52088 719AE	1				EN0			HOSE, Power Steering Reservoir, Includes Item 8, Reservoir To Pump
7	52129 342AD	1	J			EN0			HOSE ASSEMBLY, P/S PRESSURE AND RETURN
8	6504 217	1	J			EN0			CLAMP, Hose, M18.5, P/S Return Hose to Reservior
9	6502 018	2				EN0			CLAMP, Hose, M28.9 x 1.60
10									SCREW, Hex Head, M6x1x35, (NOT SERVICED) (Not Serviced)
11	5205 254	1	J			EN0			O RING, Power Steering Hose
-12	52089 289AA-	1	J			EN0			BRACKET, Power Steering

2006 Liberty (KJ)

SERIES	LINE	BODY	ENGINE	TRANSMISSION
H =HIGHLINE	T =JEEP - 2WD	74 =SPORT UTILITY 4-DR	EKG=3.7L V6 Eng.	DG6=4-Spd. Auto. 42RLE Trans.
M =MEDIUM	J =JEEP - 4WD		ENR=2.8L 4 Cyl Turbo Diesel Eng.	DGV=4-Spd. Auto. VLP Trans.
P =PREMIUM	U =JEEP - 4WD (RHD)		ENJ=2.5L 4 Cyl 16V Turbo Diesel Eng.	DGQ=5-Spd Auto. 5-45RFE Trans.
			ED1=2.4L 4 Cyl DOHC 16v SMPI Eng.	DEH=6-Speed Man. NSG370 Trans.
				DDD=5-Speed HD Man. Trans.
				DDK=5-Speed HD Man. Trans.

Hoses and Reservior, RHD 2.8L [EN0]
Figure 019-720

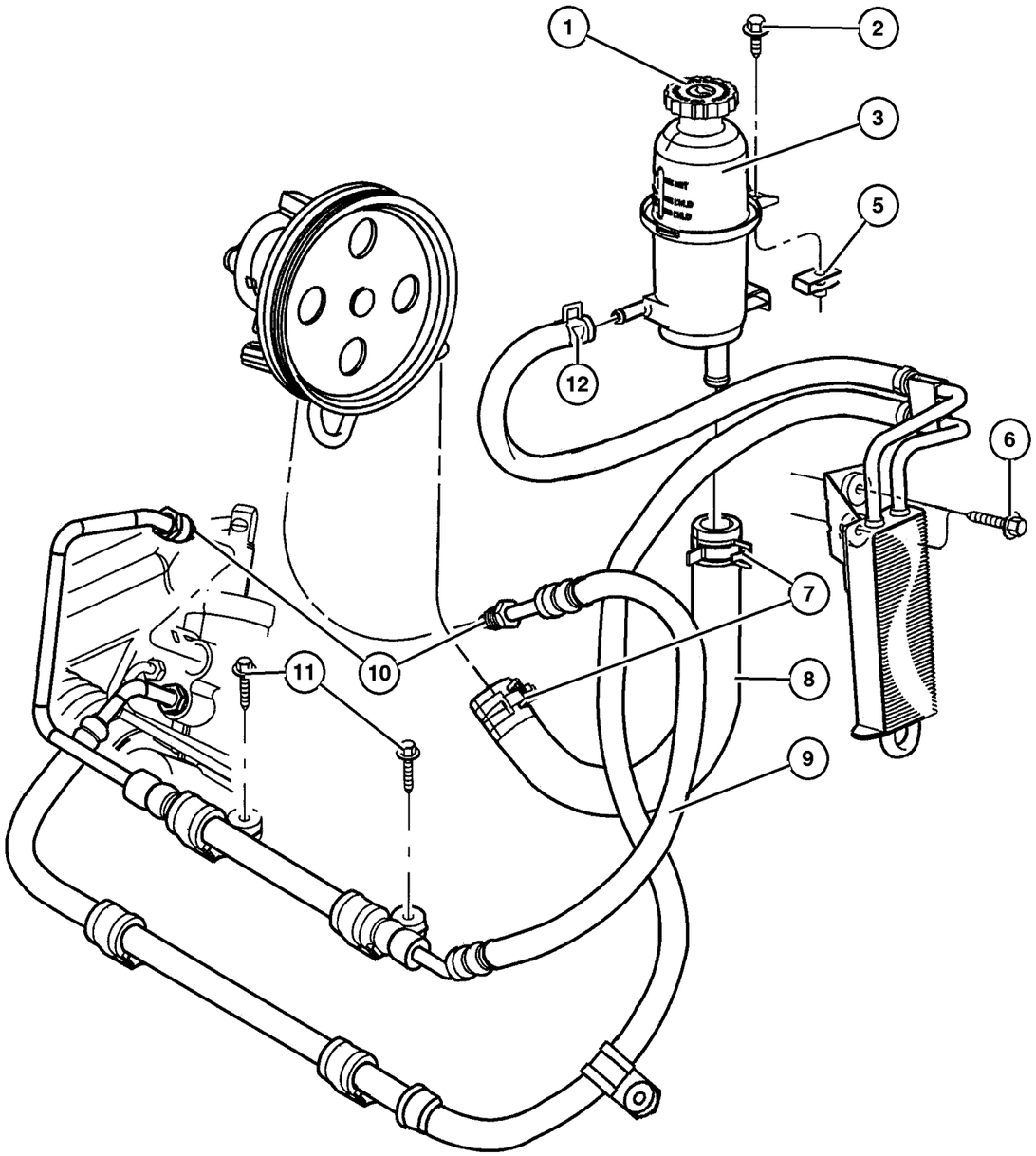

ITEM	PART NUMBER	QTY	LINE	SERIES	BODY	ENGINE	TRANS	TRIM	DESCRIPTION
Note: Sales Codes;									
[EN0]=Engines - All 4/5 Cylinder Turbo Diesel									
1	52128 513AA	1				EN0			CAP, Power Steering Reservoir
2	6102 132AA	1				EN0			SCREW, Hex Head, M6x1x20
3	52088 713AA	1				EN0			RESERVOIR, Power Steering Pump, Includes Item 4
-4	52088 874AD-	1				EN0			BRACKET, Power Steering Reservoir
5	6502 726	3				EN0			NUT
6									SCREW, Hex Flange Head, M6x1.00x35.00, (NOT SERVICED) (Not Serviced)
7	6502 018	2				EN0			CLAMP, Hose, M28.9 x 1.60
8	52088 719AE	1				EN0			HOSE, Power Steering Reservoir, Includes Item 9
9	52088 716AI	1	U			EN0			HOSE, Power Steering Pressure
10	5205 254	1	U			EN0			O RING, Power Steering Hose
11									SCREW, Hex Flange Head, M6x1.00x35.00, (NOT SERVICED) (Not Serviced)
12	6504 217	1	J			EN0			CLAMP, Hose, M18.5

2006 Liberty (KJ)

SERIES	LINE	BODY	ENGINE	TRANSMISSION
H =HIGHLINE	T =JEEP - 2WD	74 =SPORT UTILITY 4-DR	EKG=3.7L V6 Eng.	DG6=4-Spd. Auto. 42RLE Trans.
M =MEDIUM	J =JEEP - 4WD		ENR=2.8L 4 Cyl Turbo Diesel Eng.	DGV=4-Spd. Auto. VLP Trans.
P =PREMIUM	U =JEEP - 4WD (RHD)		ENJ=2.5L 4 Cyl 16V Turbo Diesel Eng.	DGQ=5-Spd Auto. 5-45RFE Trans.
			ED1=2.4L 4 Cyl DOHC 16v SMPI Eng.	DEH=6-Speed Man. NSG370 Trans.
				DDD=5-Speed HD Man. Trans.
				DDK=5-Speed HD Man. Trans.

Hoses and Reservior,LHD 3.7L [EK0]
Figure 019-730

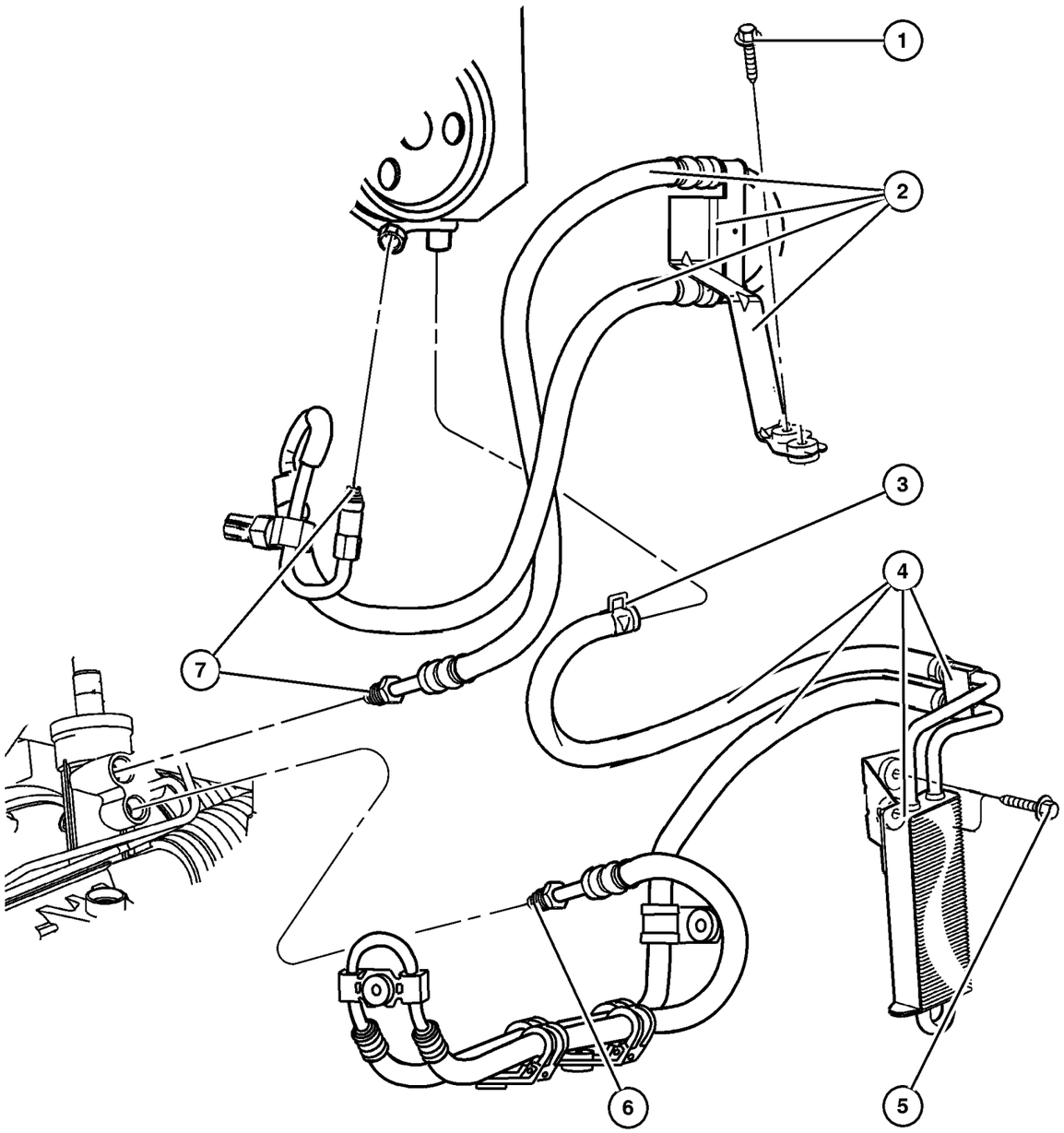

ITEM	PART NUMBER	QTY	LINE	SERIES	BODY	ENGINE	TRANS	TRIM	DESCRIPTION
Note:Sales Codes;									
[EK0]=Engines - All 3.7L 6 Cylinder Gas									
1									SCREW, Hex Flange Head, M6x1. 00x35.00, (NOT SERVICED) (Not Serviced)
2	52128 940AC	1	J, T			EK0			HOSE, Power Steering Pressure
3	6504 217	1	J, T			EK0			CLAMP, Hose, M18.5
4	52129 063AA	1	J, T			EK0			COOLER, Power Steering With Hose
5									SCREW, Hex Flange Head, M6x1. 00x35.00, (NOT SERVICED) (Not Serviced)
6	5205 254	1	J, T			EK0			O RING, Power Steering Hose
7	5205 254	1	J, T			EK0			O RING, Power Steering Hose
-8	53013 506AB-	1	J, U			EK0			GUARD, Splash
-9	6100 050	1	J, U			EK0			NUT AND WASHER, Hex, M8x1.25
-10	52129 073AB-	1	J, T			EK0			HOSE, Power Steering Return

2006 Liberty (KJ)

SERIES	LINE	BODY	ENGINE	TRANSMISSION
H =HIGHLINE	T =JEEP - 2WD	74 =SPORT UTILITY 4-DR	EKG=3.7L V6 Eng.	DG6=4-Spd. Auto. 42RLE Trans.
M =MEDIUM	J =JEEP - 4WD		ENR=2.8L 4 Cyl Turbo Diesel Eng.	DGV=4-Spd. Auto. VLP Trans.
P =PREMIUM	U =JEEP - 4WD (RHD)		ENJ=2.5L 4 Cyl 16V Turbo Diesel Eng.	DGQ=5-Spd Auto. 5-45RFE Trans.
			ED1=2.4L 4 Cyl DOHC 16v SMPI Eng.	DEH=6-Speed Man. NSG370 Trans.
				DDD=5-Speed HD Man. Trans.
				DDK=5-Speed HD Man. Trans.

Hoses and Reservior RHD 3.7L [EK0]
Figure 019-740

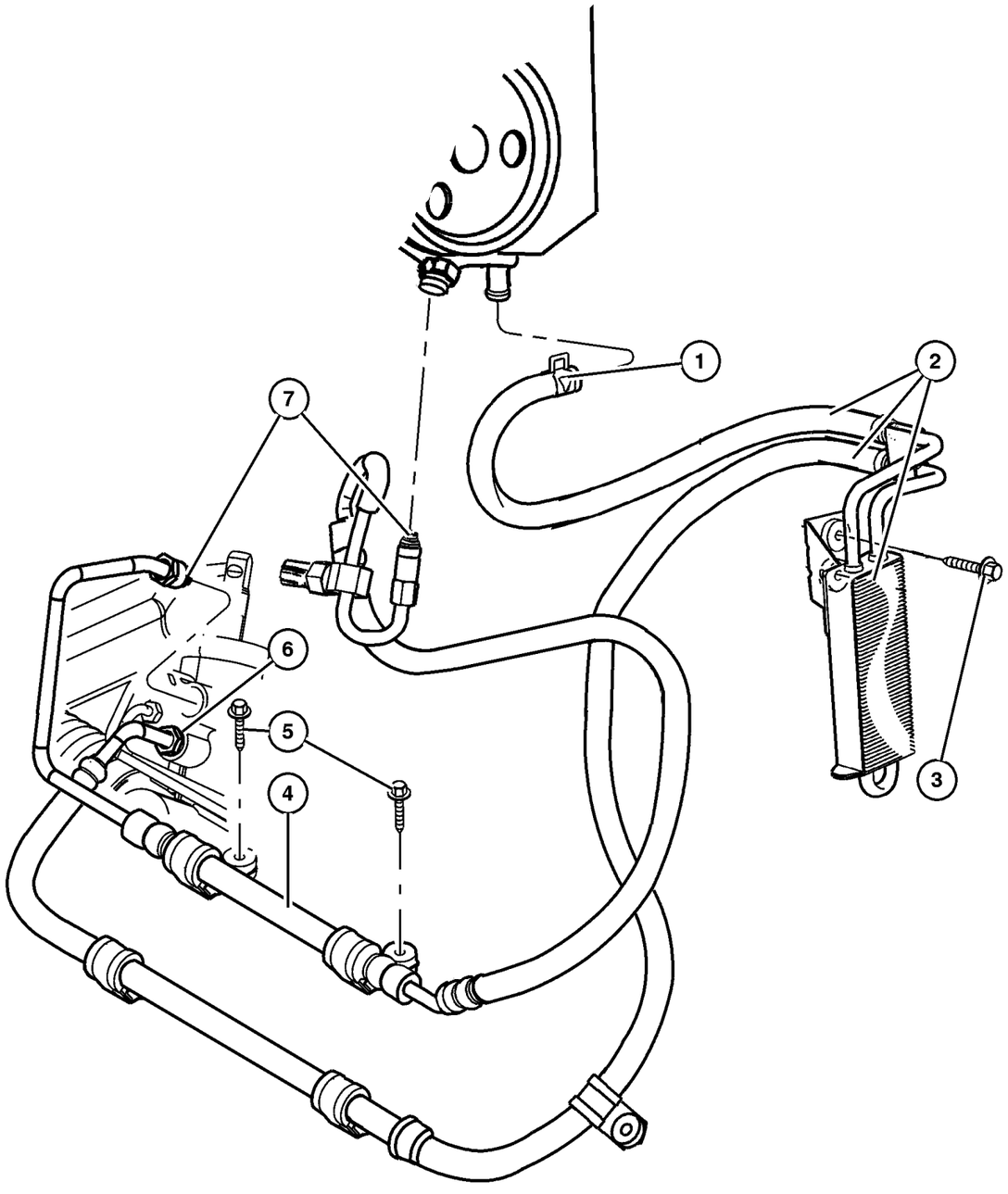

ITEM	PART NUMBER	QTY	LINE	SERIES	BODY	ENGINE	TRANS	TRIM	DESCRIPTION
Note:Sales Codes;									
[EKG]=Engine -3.7L Power Tech V6									
[EK0]=Engines - All 3.7L 6 Cylinder Gas									
1	6504 217	1	U			EK0			CLAMP, Hose, M18.5
2	52088 927AG	1	U			EK0			HOSE AND COOLER, Power Steering Return
3									SCREW, Hex Flange Head, M6x1.00x35.00, (NOT SERVICED) (Not Serviced)
4	52128 789AB	1	U			EK0			HOSE, Power Steering Pressure
5									SCREW, Hex Flange Head, M6x1.00x35.00, (NOT SERVICED) (Not Serviced)
6	5205 254	2	U			EK0			O RING, Power Steering Hose
7	5205 254	2	U			EK0			O RING, Power Steering Hose
-8	53013 506AB-	1	J, U			EK0			GUARD, Splash

2006 Liberty (KJ)

SERIES	LINE	BODY	ENGINE	TRANSMISSION
H =HIGHLINE	T =JEEP - 2WD	74 =SPORT UTILITY 4-DR	EKG=3.7L V6 Eng.	DG6=4-Spd. Auto. 42RLE Trans.
M =MEDIUM	J =JEEP - 4WD		ENR=2.8L 4 Cyl Turbo Diesel Eng.	DGV=4-Spd. Auto. VLP Trans.
P =PREMIUM	U =JEEP - 4WD (RHD)		ENJ=2.5L 4 Cyl 16V Turbo Diesel Eng.	DGQ=5-Spd Auto. 5-45RFE Trans.
			ED1=2.4L 4 Cyl DOHC 16v SMPI Eng.	DEH=6-Speed Man. NSG370 Trans.
				DDD=5-Speed HD Man. Trans.
				DDK=5-Speed HD Man. Trans.

Group – 42RLE

Automatic Transaxle 4 Speed

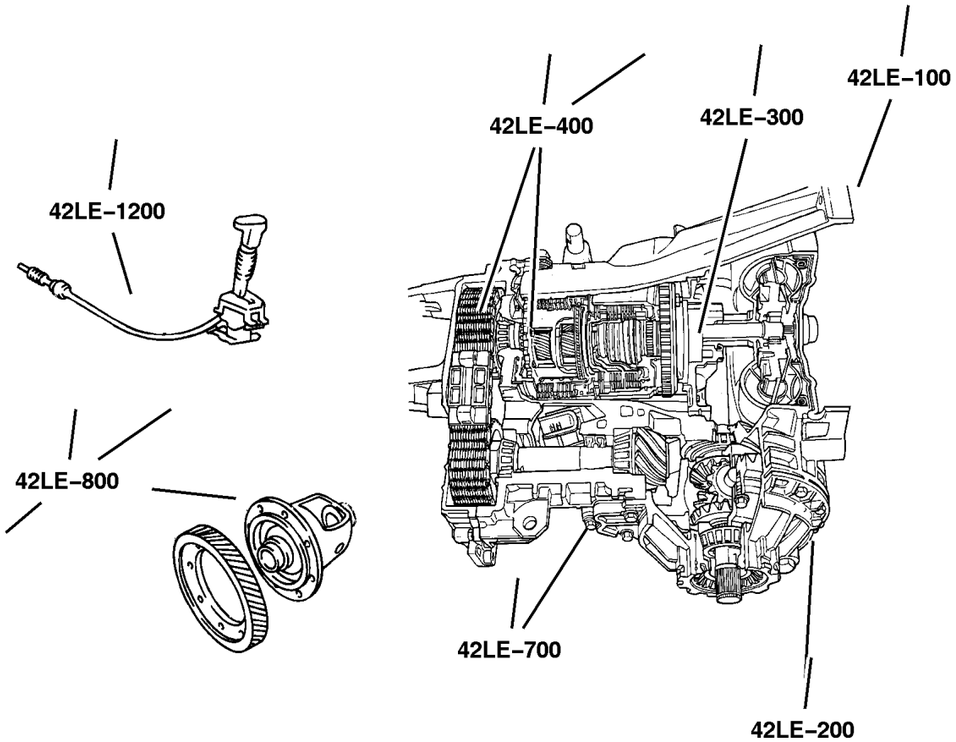

42RLE–100 Transaxle Assembly 	**42RLE–200** Case and Extension 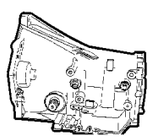	**42RLE–300** Oil Pump 	**42RLE–400** Gear Train 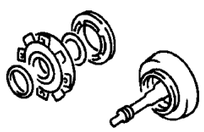
42RLE–700 Valve Body 	**42RLE–1200** Gearshift Controls 		

GROUP 42RLE - Automatic Transaxle 4 Speed

Illustration Title — Group-Fig. No.

Transaxle Assembly
Assembly, Transmission [DG6] . . . . . Fig. 42RLE-110
Assembly, Transmission [DGV] . . . . . Fig. 42RLE-120

Case and Extension
Transmission Case & Extension [DG6] . . . . . Fig. 42RLE-210
Transmission Case & Extension [DGV] . . . . . Fig. 42RLE-220
Adapter & Extension [DG6 / DGV] . . . . . Fig. 42RLE-230
Mounting, Transmission [DG6 / DGV] . . . . . Fig. 42RLE-240
Collar, Structural [DG6 / DGV] . . . . . Fig. 42RLE-250
Oil Fill Tube [DG6 / DGV] . . . . . Fig. 42RLE-260
Overhaul & Seal Package [DG6 / DGV] . . . . . Fig. 42RLE-270

Oil Pump
Oil Pump & Reaction Shaft [DG6] . . . . . Fig. 42RLE-310
Oil Pump & Reaction Shaft [DGV] . . . . . Fig. 42RLE-320

Gear Train
Clutch, Input Shaft [DG6] . . . . . Fig. 42RLE-410
Clutch, Input Shaft [DGV] . . . . . Fig. 42RLE-420
Gear Train [DG6] . . . . . Fig. 42RLE-430
Gear Train [DGV] . . . . . Fig. 42RLE-440

Valve Body
Valve Body [DG6] . . . . . Fig. 42RLE-710
Valve Body [DGV] . . . . . Fig. 42RLE-710
Accumulator Pistons & Springs [DG6] . . . . . Fig. 42RLE-730
Accumulator Pistons & Springs [DGV] . . . . . Fig. 42RLE-740
Parking Sprag [DG6] . . . . . Fig. 42RLE-750
Parking Sprag [DGV] . . . . . Fig. 42RLE-760

Gearshift Controls
Gearshift Control [DG6 & DGV] . . . . . Fig. 42RLE-1210

Assembly, Transmission [DG6]
Figure 42RLE-110

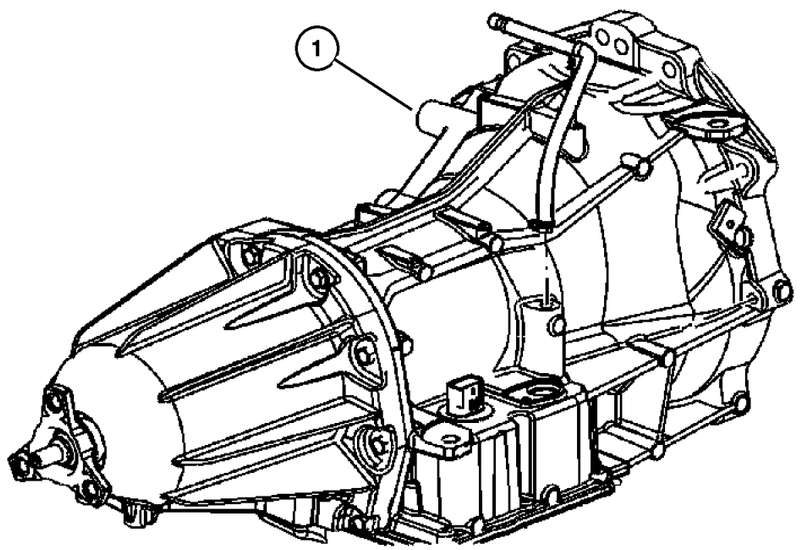

ITEM	PART NUMBER	QTY	LINE	SERIES	BODY	ENGINE	TRANS	TRIM	DESCRIPTION
NOTE:									
Sales Codes:									
[DG6]=4 Speed Automatic Transmission - [42RLE]									
1									TRANSMISSION PACKAGE
	5143 690AB	1	T				DG6		With Stamp # [52850697AB]
	5143 971AB	1	J, U				DG6		With Stamp # [52850696AB]
-2									CONVERTER PACKAGE, Torque
	5093 944AB-	1	J, U				DG6		
		1	T				DG6		

2006 Liberty (KJ)

SERIES	LINE	BODY	ENGINE	TRANSMISSION
H =HIGHLINE	T =JEEP - 2WD	74 =SPORT UTILITY 4-DR	EKG=3.7L V6 Eng.	DG6=4-Spd. Auto. 42RLE Trans.
M =MEDIUM	J =JEEP - 4WD		ENR=2.8L 4 Cyl Turbo Diesel Eng.	DGV=4-Spd. Auto. VLP Trans.
P =PREMIUM	U =JEEP - 4WD (RHD)		ENJ=2.5L 4 Cyl 16V Turbo Diesel Eng.	DGQ=5-Spd Auto. 5-45RFE Trans.
			ED1=2.4L 4 Cyl DOHC 16v SMPI Eng.	DEH=6-Speed Man. NSG370 Trans.
				DDD=5-Speed HD Man. Trans.
				DDK=5-Speed HD Man. Trans.

Assembly, Transmission [DGV]
Figure 42RLE-120

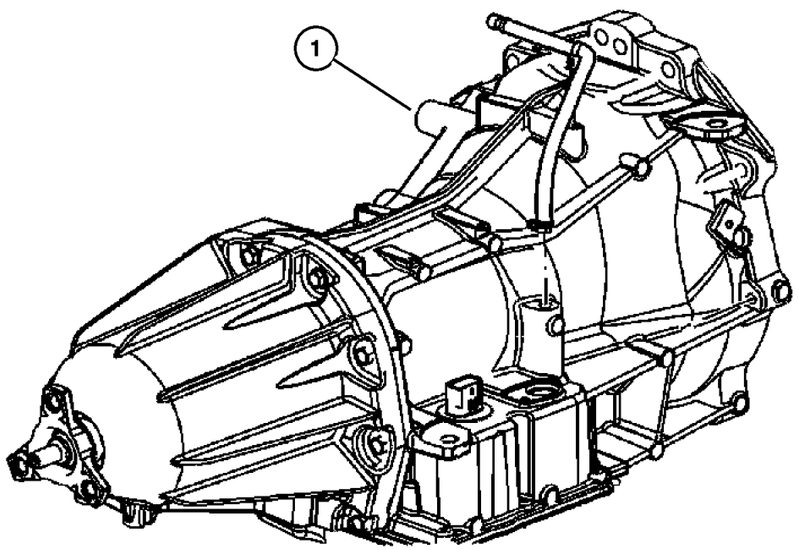

ITEM	PART NUMBER	QTY	LINE	SERIES	BODY	ENGINE	TRANS	TRIM	DESCRIPTION
NOTE:									
Sales Codes:									
[DGV]=4 Speed Automatic Transmission - [42RLE / VLP]									
1									TRANSMISSION PACKAGE
	5176 258AB	1	T				DGV		With Stamp # [04800427AA]
	5179 247AA	1	J, U				DGV		With Stamp # [04800426AA]
-2									CONVERTER PACKAGE, Torque
	5093 944AB-	1	J, U				DGV		
		1	T				DGV		

2006 Liberty (KJ)

SERIES	LINE	BODY	ENGINE	TRANSMISSION
H =HIGHLINE	T =JEEP - 2WD	74 =SPORT UTILITY 4-DR	EKG=3.7L V6 Eng.	DG6=4-Spd. Auto. 42RLE Trans.
M =MEDIUM	J =JEEP - 4WD		ENR=2.8L 4 Cyl Turbo Diesel Eng.	DGV=4-Spd. Auto. VLP Trans.
P =PREMIUM	U =JEEP - 4WD (RHD)		ENJ=2.5L 4 Cyl 16V Turbo Diesel Eng.	DGQ=5-Spd Auto. 5-45RFE Trans.
			ED1=2.4L 4 Cyl DOHC 16v SMPI Eng.	DEH=6-Speed Man. NSG370 Trans.
				DDD=5-Speed HD Man. Trans.
				DDK=5-Speed HD Man. Trans.

Transmission Case & Extension [DG6]
Figure 42RLE-210

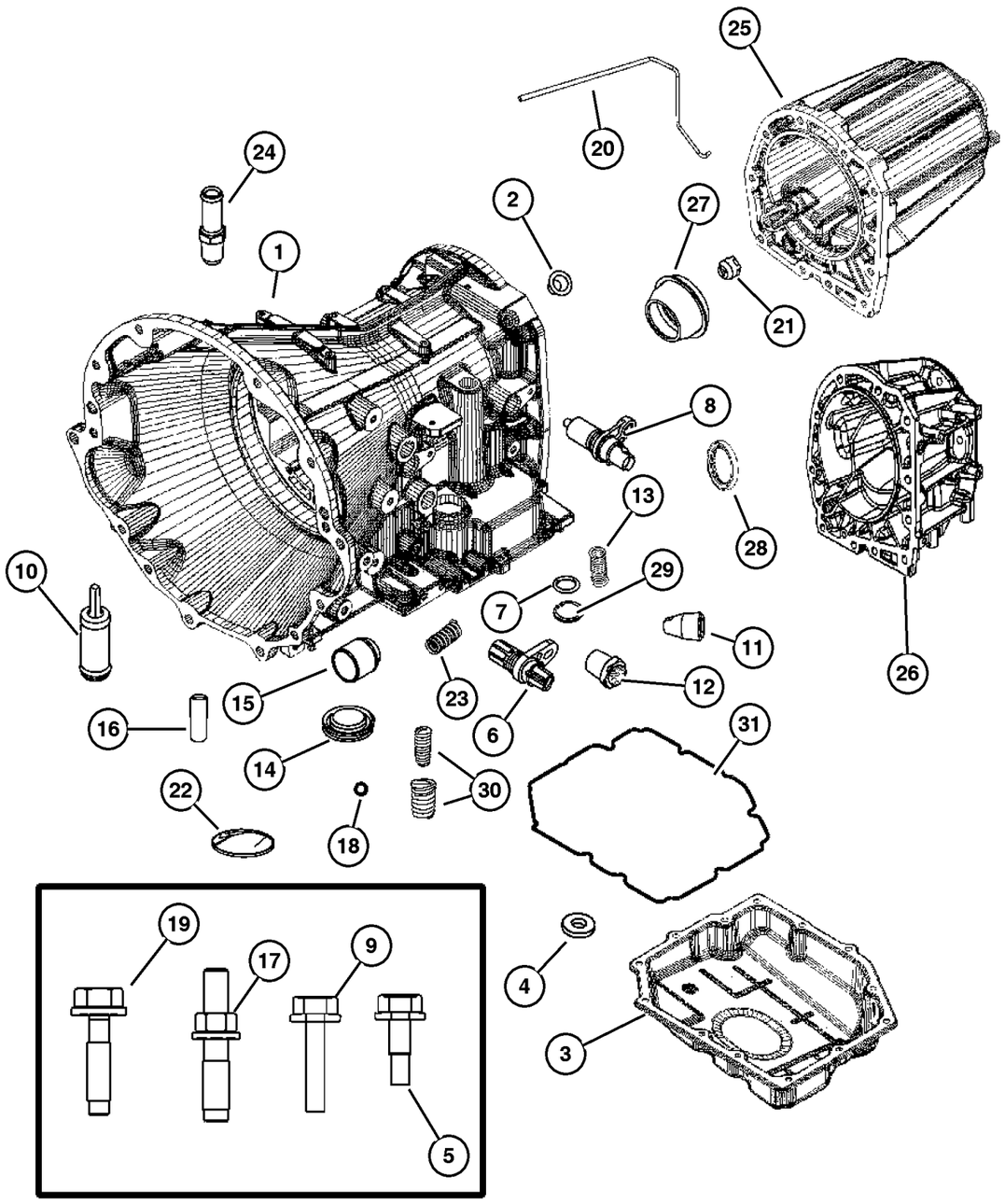

ITEM	PART NUMBER	QTY	LINE	SERIES	BODY	ENGINE	TRANS	TRIM	DESCRIPTION
NOTE:									
Sales Codes:									
[DGV]=4 Speed Automatic Transmission - [42RLE / VLP]									
[DG6]=4 Speed Automatic Transmission - [42RLE]									
1									CASE, Transmission
	5101 881AA	1	T				DG6		
		1	J, U				DG6		
2									PLUG, Transmission Case
	4567 312	1	T				DG6		
		1	J, U				DG6		
3									PAN, Transmission Oil
	52852 912AB	5	T				DG6		
		5	J, U				DG6		
4									MAGNET, Transmission
	3681 601	5	T				DG6		
		5	J, U				DG6		
5									BOLT, Hex Head, M8x1.25x16
	6501 474	12	J, U				DG6		Oil Pan To Case
		12	T				DG6		Oil Pan To Case
6									SENSOR, Transmission Input Speed
	4799 061AB	1	T				DG6		
		1	J, U				DG6		
7									O RING
	4799 062	1	T				DG6		
		1	J, U				DG6		
8									SENSOR, Transmission Output Speed
	52854 001AA	1	T				DG6		
		1	J, U				DG6		
9	6101 331	2	T				DG6		BOLT, M6x1.00x20
10									VALVE, Cooler Bypass
	4659 946AB	1	T				DG6		
		1	J, U				DG6		
11									BUSHING, Dowel
	4531 412	1	T				DG6		
		1	J, U				DG6		
12									FITTING, Quick Connect
	52119 547AA	2	J, U				DG6		
		2	T				DG6		
13									SPRING, Accumulator
	4567 575	1	T				DG6		
		1	J, U				DG6		
14									COVER, Accumulator

2006 Liberty (KJ)

SERIES	LINE	BODY	ENGINE	TRANSMISSION
H =HIGHLINE	T =JEEP - 2WD	74 =SPORT UTILITY 4-DR	EKG=3.7L V6 Eng.	DG6=4-Spd. Auto. 42RLE Trans.
M =MEDIUM	J =JEEP - 4WD		ENR=2.8L 4 Cyl Turbo Diesel Eng.	DGV=4-Spd. Auto. VLP Trans.
P =PREMIUM	U =JEEP - 4WD (RHD)		ENJ=2.5L 4 Cyl 16V Turbo Diesel Eng.	DGQ=5-Spd Auto. 5-45RFE Trans.
			ED1=2.4L 4 Cyl DOHC 16v SMPI Eng.	DEH=6-Speed Man. NSG370 Trans.
				DDD=5-Speed HD Man. Trans.
				DDK=5-Speed HD Man. Trans.

AR = Use as required - = Non illustrated part # = New this model year

Transmission Case & Extension [DG6]
Figure 42RLE-210

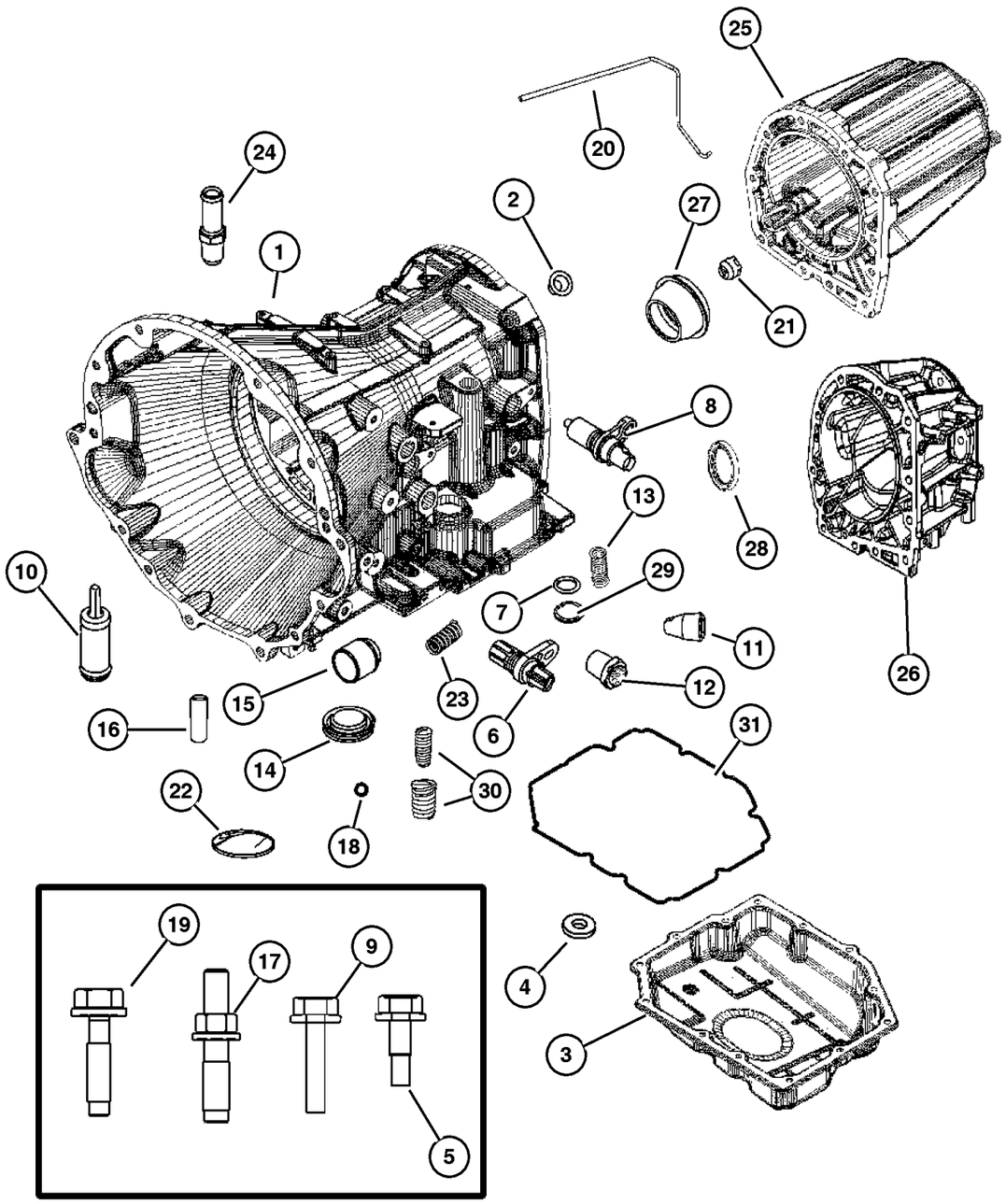

ITEM	PART NUMBER	QTY	LINE	SERIES	BODY	ENGINE	TRANS	TRIM	DESCRIPTION
	4431 617AB	1	T				DG6		
		1	J, U				DG6		
15									PISTON, 2nd and 4th Accumulator
	4446 620	1	J, U				DG6		
		1	T				DG6		
16									DOWEL, M6x16
	6100 994	1	T				DG6		
		1	J, U				DG6		
17									STUD, M10x1.5x62
	6508 113AA	4	T				DG6		
		4	J, U				DG6		
18									BALL, Transmission Oil Pump
	0152 127	11	J, U				DG6		
		1	T				DG6		
19									SCREW AND WASHER, Hex Head, M10x1.5x37
	6508 111AA	2	J, U				DG6		Transmission Extension To Case
		2	T				DG6		Transmission Extension To Case
20	5114 530AA	1	T				DG6		TUBE AND GROMMET, Extension Lubrication
21									SEAL, Transmission
	52852 998AA	1	T				DG6		Lube Tube Grommet
		1	J, U				DG6		Lube Tube Grommet
22									SEAL, Accumulator
	4446 544	2	T				DG6		
		2	J, U				DG6		
23									SPRING, Accumulator
	4471 880	1	T				DG6		
		1	J, U				DG6		
24									CONNECTOR, Oil Cooler Hose
	4531 202	1	J, U				DG6		
		1	T				DG6		
25	52852 987AB	1	T				DG6		HOUSING, Transmission Rear Extension
26	52852 986AB	1	J, U				DG6		ADAPTER, Transfer Case
27	4531 216AB	1	T				DG6		SEAL, Output Shaft
28	4269 956AB	1	J, U				DG6		SEAL, Adapter
29									SNAP RING
	6501 695	1	T				DG6		
		1	J, U				DG6		
30									SPRING, Accumulator
	4800 310AA	1	J, U				DG6		

2006 Liberty (KJ)

SERIES	LINE	BODY	ENGINE	TRANSMISSION
H =HIGHLINE	T =JEEP - 2WD	74 =SPORT UTILITY 4-DR	EKG=3.7L V6 Eng.	DG6=4-Spd. Auto. 42RLE Trans.
M =MEDIUM	J =JEEP - 4WD		ENR=2.8L 4 Cyl Turbo Diesel Eng.	DGV=4-Spd. Auto. VLP Trans.
P =PREMIUM	U =JEEP - 4WD (RHD)		ENJ=2.5L 4 Cyl 16V Turbo Diesel Eng.	DGQ=5-Spd Auto. 5-45RFE Trans.
			ED1=2.4L 4 Cyl DOHC 16v SMPI Eng.	DEH=6-Speed Man. NSG370 Trans.
				DDD=5-Speed HD Man. Trans.
				DDK=5-Speed HD Man. Trans.

AR = Use as required - = Non illustrated part # = New this model year

Transmission Case & Extension [DG6]
Figure 42RLE-210

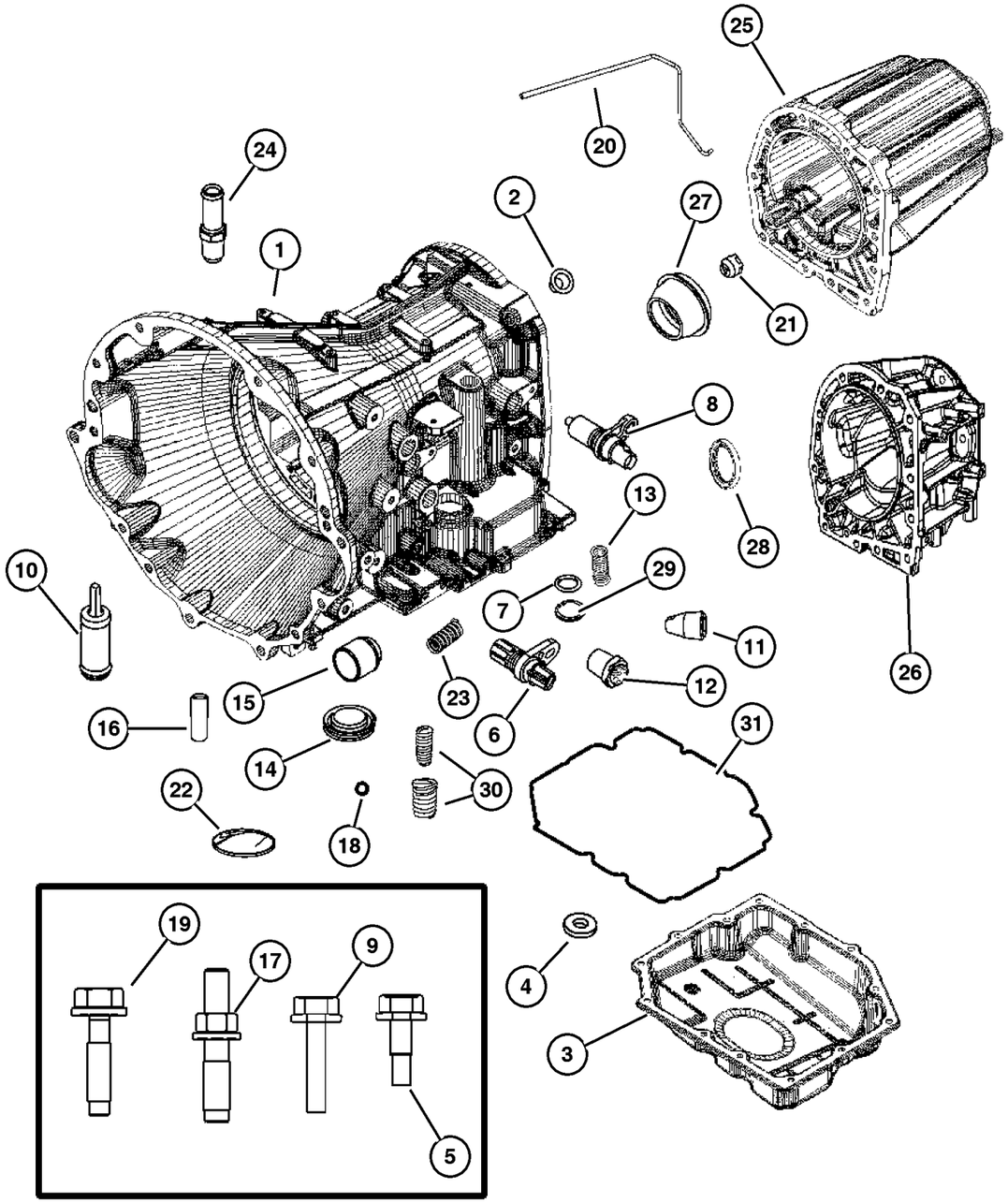

ITEM	PART NUMBER	QTY	LINE	SERIES	BODY	ENGINE	TRANS	TRIM	DESCRIPTION
		1	T				DG6		
31									ADHESIVE, (NOT SERVICED) (Not Serviced)

2006 Liberty (KJ)

SERIES	LINE	BODY	ENGINE	TRANSMISSION
H =HIGHLINE	T =JEEP - 2WD	74 =SPORT UTILITY 4-DR	EKG=3.7L V6 Eng.	DG6=4-Spd. Auto. 42RLE Trans.
M =MEDIUM	J =JEEP - 4WD		ENR=2.8L 4 Cyl Turbo Diesel Eng.	DGV=4-Spd. Auto. VLP Trans.
P =PREMIUM	U =JEEP - 4WD (RHD)		ENJ=2.5L 4 Cyl 16V Turbo Diesel Eng.	DGQ=5-Spd Auto. 5-45RFE Trans.
			ED1=2.4L 4 Cyl DOHC 16v SMPI Eng.	DEH=6-Speed Man. NSG370 Trans.
				DDD=5-Speed HD Man. Trans.
				DDK=5-Speed HD Man. Trans.

Transmission Case & Extension [DGV]
Figure 42RLE-220

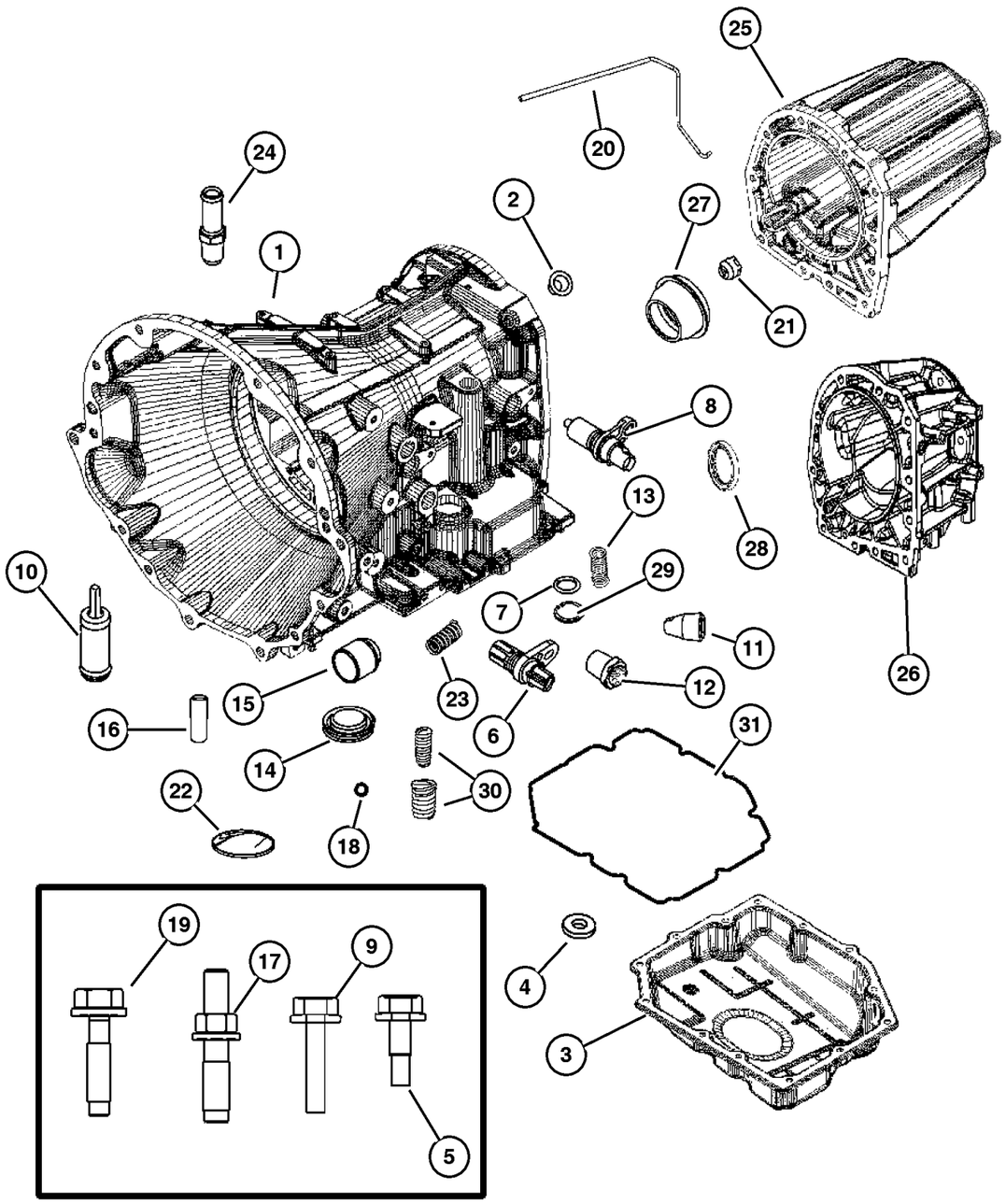

ITEM	PART NUMBER	QTY	LINE	SERIES	BODY	ENGINE	TRANS	TRIM	DESCRIPTION
NOTE:									
Sales Codes:									
[DGV]=4 Speed Automatic Transmission - [42RLE / VLP]									
[DG6]=4 Speed Automatic Transmission - [42RLE]									
1									CASE, Transmission
	5179 126AA	1	J, U				DGV		
		1	T				DGV		
2									PLUG, Transmission Case
	4567 312	1	J, U				DGV		
		1	T				DGV		
3									PAN, Transmission Oil
	52852 912AB	1	T				DGV		
		1	J, U				DGV		
4									MAGNET, Transmission
	3681 601	1	T				DGV		
		1	J, U				DGV		
5									BOLT, Hex Head, M8x1.25x16
	6501 474	12	T				DGV		
		12	J, U				DGV		
6									SENSOR, Transmission Input Speed
	4799 061AB	1	J, U				DGV		
		1	T				DGV		
7									O RING
	4799 062	1	J, U				DGV		
		1	T				DGV		
8									SENSOR, Transmission Output Speed
	52854 001AA	1	J, U				DGV		
		1	T				DGV		
9	6101 331	2	T				DGV		BOLT, M6x1.00x20
10									VALVE, Cooler Bypass
	4659 946AB	1	T				DGV		
		1	J, U				DGV		
11									BUSHING, Dowel
	4531 412	1	J, U				DGV		
		1	T				DGV		
12									FITTING, Quick Connect
	52119 547AA	2	J, U				DGV		
		2	T				DGV		
13									SPRING, Accumulator
	4567 575	1	T				DGV		
		1	J, U				DGV		
14									COVER, Accumulator

2006 Liberty (KJ)

SERIES	LINE	BODY	ENGINE	TRANSMISSION
H =HIGHLINE	T =JEEP - 2WD	74 =SPORT UTILITY 4-DR	EKG=3.7L V6 Eng.	DG6=4-Spd. Auto. 42RLE Trans.
M =MEDIUM	J =JEEP - 4WD		ENR=2.8L 4 Cyl Turbo Diesel Eng.	DGV=4-Spd. Auto. VLP Trans.
P =PREMIUM	U =JEEP - 4WD (RHD)		ENJ=2.5L 4 Cyl 16V Turbo Diesel Eng.	DGQ=5-Spd Auto. 5-45RFE Trans.
			ED1=2.4L 4 Cyl DOHC 16v SMPI Eng.	DEH=6-Speed Man. NSG370 Trans.
				DDD=5-Speed HD Man. Trans.
				DDK=5-Speed HD Man. Trans.

AR = Use as required - = Non illustrated part # = New this model year

Transmission Case & Extension [DGV]
Figure 42RLE-220

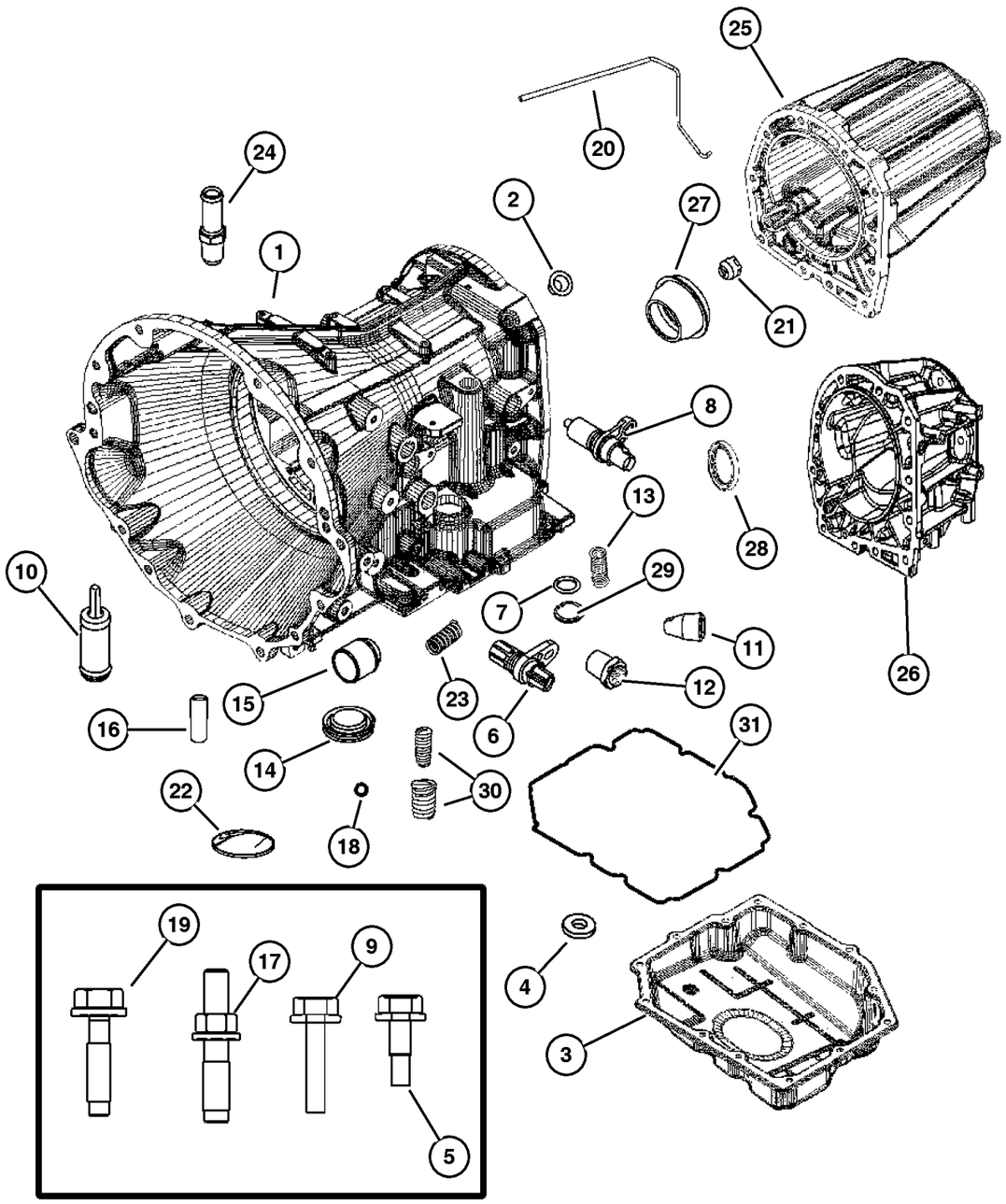

ITEM	PART NUMBER	QTY	LINE	SERIES	BODY	ENGINE	TRANS	TRIM	DESCRIPTION
	4431 617AB	1	J, U				DGV		
		1	T				DGV		
15									PISTON, 2nd and 4th Accumulator
	4446 620	1	J, U				DGV		
		1	T				DGV		
16									DOWEL, M6x16
	6100 994	1	J, U				DGV		
		1	T				DGV		
17									STUD, M10x1.5x62
	6508 113AA	4	J, U				DGV		
		4	T				DGV		
18									BALL, Transmission Oil Pump
	0152 127	1	T				DGV		
		1	J, U				DGV		
19									SCREW AND WASHER, Hex Head, M10x1.5x37
	6508 111AA	2	J, U				DGV		Transmission Extension To Case
		2	T				DGV		Transmission Extension To Case
20	5114 530AA	1	T				DGV		TUBE AND GROMMET
21									SEAL, Transmission
	52852 998AA	1	T				DGV		
		1	J, U				DGV		
22									SEAL, Accumulator
	4446 544	1	J, U				DGV		
		1	T				DGV		
23									SPRING, Accumulator
	4471 880	1	T				DGV		
		1	J, U				DGV		
24									CONNECTOR, Oil Cooler Hose
	4531 202	1	J, U				DGV		
		1	T				DGV		
25	52852 987AB	1	T				DGV		HOUSING, Transmission Rear Extension
26	52852 986AB	1	J, U				DGV		ADAPTER, Transfer Case
27	4531 216AB	1	T				DGV		SEAL, Output Shaft
28	4269 956AB	1	J, U				DGV		SEAL, Adapter
29									SNAP RING
	6501 695	1	T				DGV		
		1	J, U				DGV		
30									SPRING, Accumulator
	4800 310AA	1	T				DGV		
		1	J, U				DGV		

2006 Liberty (KJ)

SERIES	LINE	BODY	ENGINE	TRANSMISSION
H =HIGHLINE	T =JEEP - 2WD	74 =SPORT UTILITY 4-DR	EKG=3.7L V6 Eng.	DG6=4-Spd. Auto. 42RLE Trans.
M =MEDIUM	J =JEEP - 4WD		ENR=2.8L 4 Cyl Turbo Diesel Eng.	DGV=4-Spd. Auto. VLP Trans.
P =PREMIUM	U =JEEP - 4WD (RHD)		ENJ=2.5L 4 Cyl 16V Turbo Diesel Eng.	DGQ=5-Spd Auto. 5-45RFE Trans.
			ED1=2.4L 4 Cyl DOHC 16v SMPI Eng.	DEH=6-Speed Man. NSG370 Trans.
				DDD=5-Speed HD Man. Trans.
				DDK=5-Speed HD Man. Trans.

AR = Use as required - = Non illustrated part # = New this model year

Transmission Case & Extension [DGV]
Figure 42RLE-220

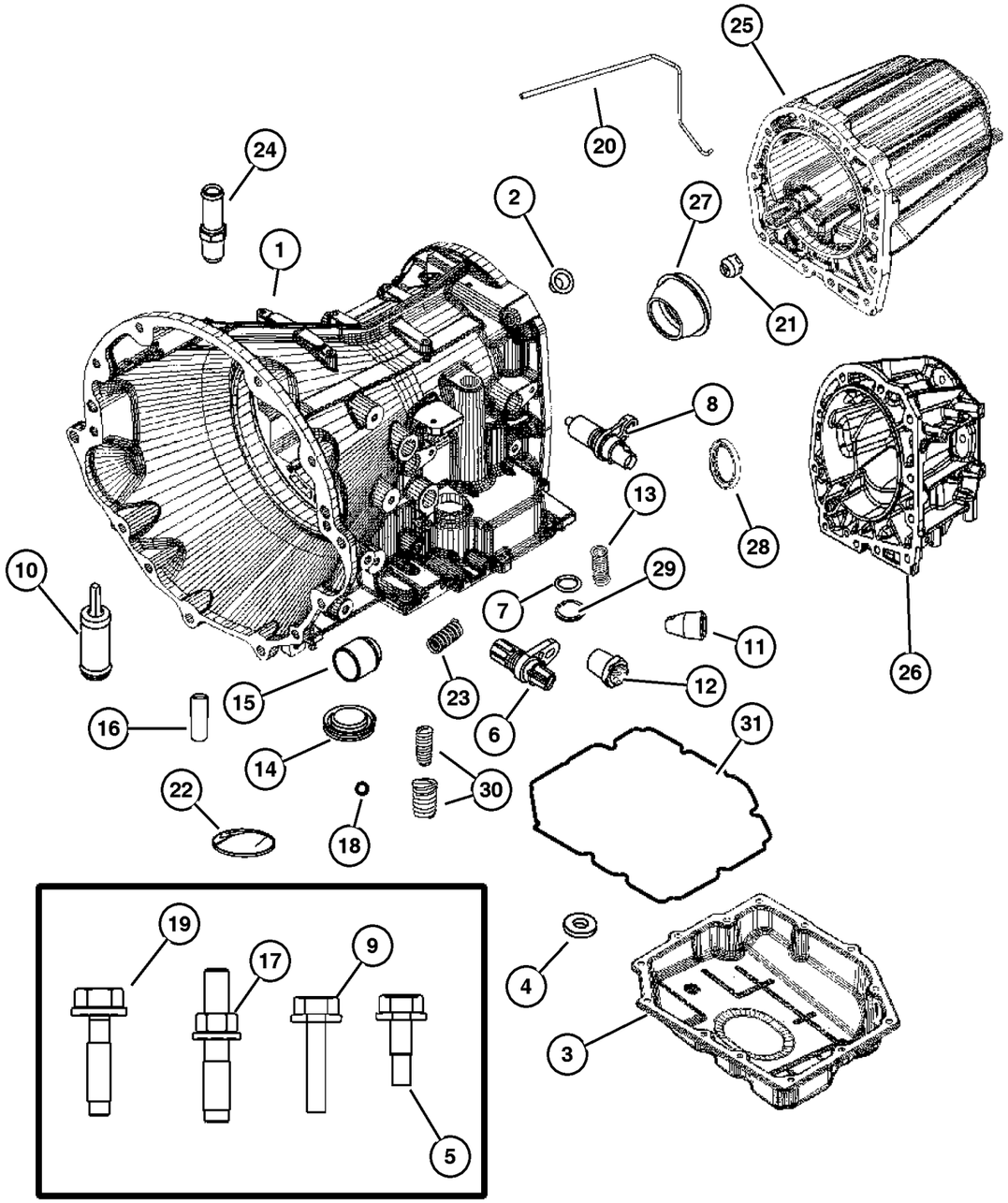

ITEM	PART NUMBER	QTY	LINE	SERIES	BODY	ENGINE	TRANS	TRIM	DESCRIPTION
31									ADHESIVE, (NOT SERVICED) (Not Serviced)

2006 Liberty (KJ)

SERIES	LINE	BODY	ENGINE	TRANSMISSION
H =HIGHLINE	T =JEEP - 2WD	74 =SPORT UTILITY 4-DR	EKG=3.7L V6 Eng.	DG6=4-Spd. Auto. 42RLE Trans.
M =MEDIUM	J =JEEP - 4WD		ENR=2.8L 4 Cyl Turbo Diesel Eng.	DGV=4-Spd. Auto. VLP Trans.
P =PREMIUM	U =JEEP - 4WD (RHD)		ENJ=2.5L 4 Cyl 16V Turbo Diesel Eng.	DGQ=5-Spd Auto. 5-45RFE Trans.
			ED1=2.4L 4 Cyl DOHC 16v SMPI Eng.	DEH=6-Speed Man. NSG370 Trans.
				DDD=5-Speed HD Man. Trans.
				DDK=5-Speed HD Man. Trans.

Adapter & Extension [DG6 / DGV]
Figure 42RLE-230

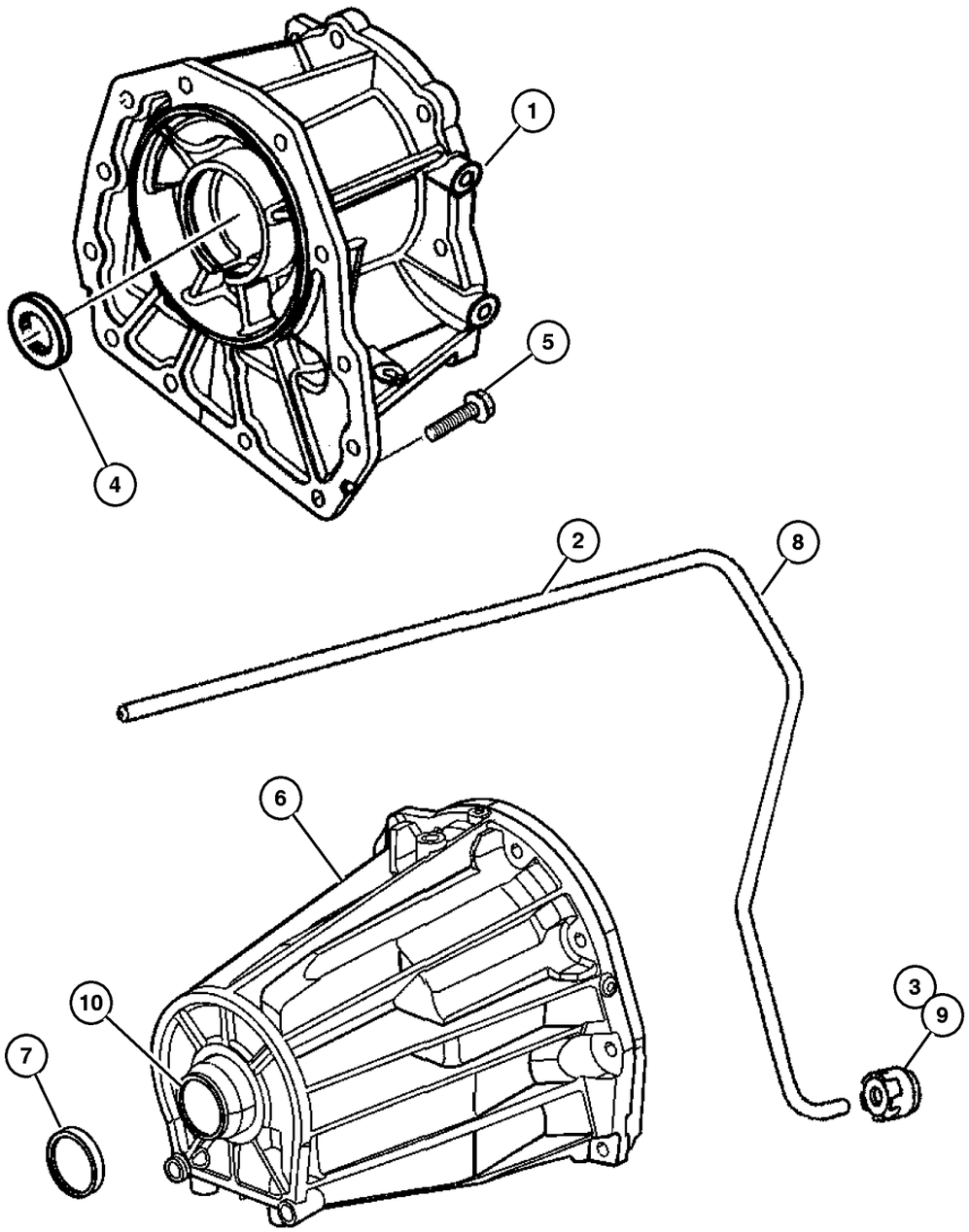

ITEM	PART NUMBER	QTY	LINE	SERIES	BODY	ENGINE	TRANS	TRIM	DESCRIPTION
NOTE:									
Sales Codes:									
[DG6]=4 Speed Automatic Transmission - [42RLE]									
1									ADAPTER, Transfer Case
	52852 986AB	1	J, U				DG6		
		1	J, U				DGV		
2									TUBE
	52854 177AA	AR					DG6		
		1	J, U				DGV		
3									SEAL, Transmission
	52852 998AA	1	J, U				DG6		
		1	J, U				DGV		
4									SEAL, Adapter
	4269 956AB	1	J, U				DG6		
		1	J, U				DGV		
5									SCREW AND WASHER, Hex Head, M10x1.5x37
	6504 774	5	T				DG6		
		5	J, U				DGV		
		5	T				DGV		
		5	J, U				DG6		
6	52852 987AB	1	T				DG6		HOUSING, Transmission Rear Extension
7	4531 216AB	1	T				DG6		SEAL, Output Shaft
8	52854 177AA	AR					DG6		TUBE
9	52852 998AA	AR					DG6		SEAL, Transmission
10									BUSHING, (NOT SERVICED) (Not Serviced)

2006 Liberty (KJ)

SERIES	LINE	BODY	ENGINE	TRANSMISSION
H =HIGHLINE	T =JEEP - 2WD	74 =SPORT UTILITY 4-DR	EKG=3.7L V6 Eng.	DG6=4-Spd. Auto. 42RLE Trans.
M =MEDIUM	J =JEEP - 4WD		ENR=2.8L 4 Cyl Turbo Diesel Eng.	DGV=4-Spd. Auto. VLP Trans.
P =PREMIUM	U =JEEP - 4WD (RHD)		ENJ=2.5L 4 Cyl 16V Turbo Diesel Eng.	DGQ=5-Spd Auto. 5-45RFE Trans.
			ED1=2.4L 4 Cyl DOHC 16v SMPI Eng.	DEH=6-Speed Man. NSG370 Trans.
				DDD=5-Speed HD Man. Trans.
				DDK=5-Speed HD Man. Trans.

Mounting, Transmission [DG6 / DGV]
Figure 42RLE-240

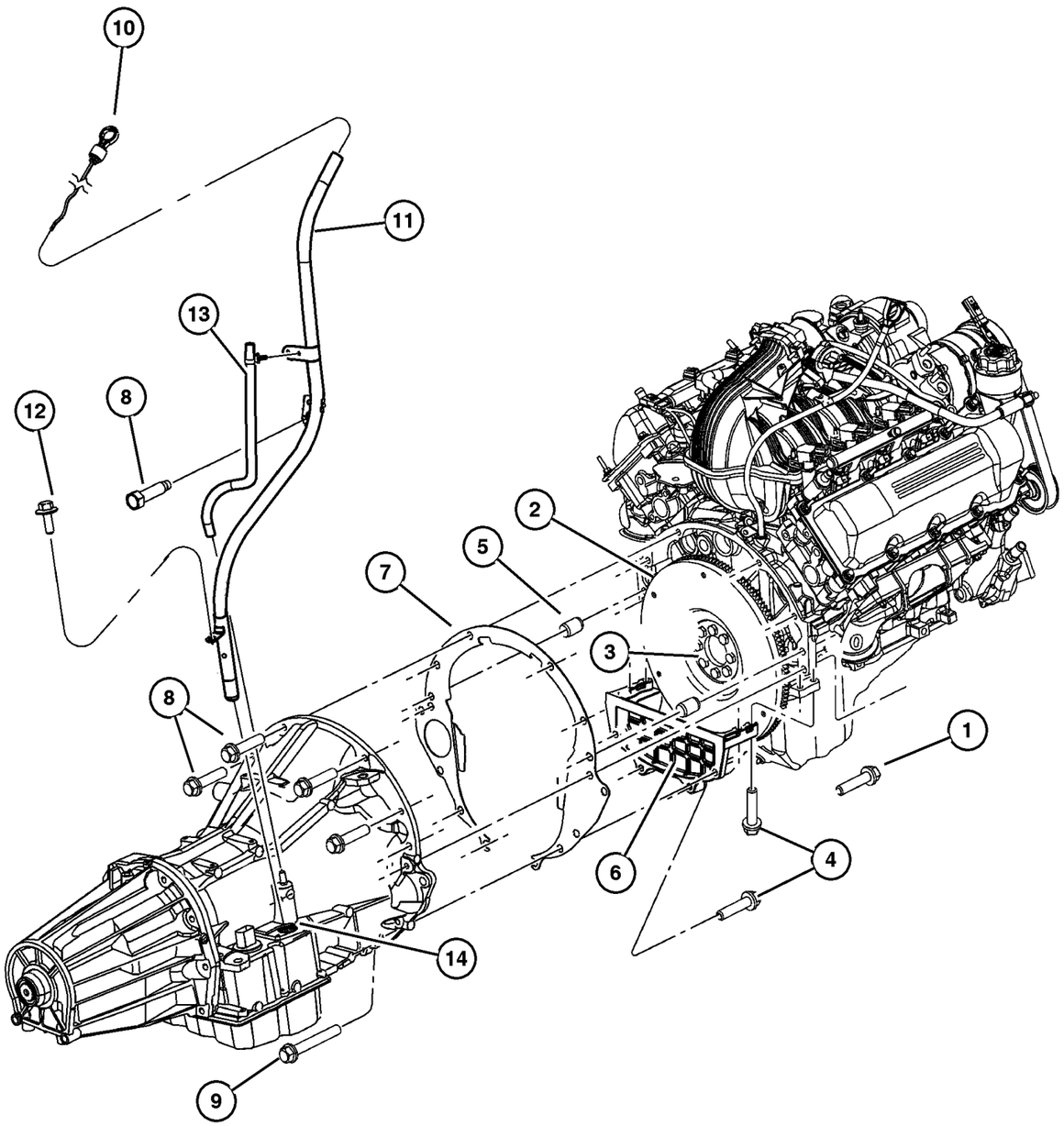

ITEM	PART NUMBER	QTY	LINE	SERIES	BODY	ENGINE	TRANS	TRIM	DESCRIPTION
NOTE:									
Sales Codes:									
[DG6]=4 Speed Automatic Transmission - 42RLE									
[DG0]=All Automatic Transmissions									
[EK0]=All 3.7L V-6 Engines									
1	6036 385AA	2				EK0	DG0		SCREW AND WASHER, Hex Head, .437-14x2.00
2	4736 253AA	1				EK0	DG0		PLATE, Torque Converter Drive
3	6503 465	8				EK0	DG0		BOLT, Drive Plate and Flywheel
4	6101 985	8				EK0			SCREW AND WASHER, M10x1.50x45.00
5	1122 532	2				EK0			DOWEL, Block To Clutch Housing
6	53021 282AA	1				EK0			COVER, Engine
7	52104 344AA	1				EK0	DG0		COVER, Transmission Dust
8	6022 266	4				EK0	DG0		SCREW, Hex Head, .375-16x1.5
9	6101 985	8				EK0			SCREW AND WASHER, M10x1.50x45.00
10	53013 592AC	1					DG6, DGV		INDICATOR, Transmission Fluid Level
11	53013 591AC	1				EK0	DG6, DGV		TUBE, Transmission Oil Filler
12	6501 979	1					DG0		SCREW AND WASHER, Hex Head, M6x1x17
13	53013 593AA	1					DG6, DGV		TUBE, Vent
14									GROMMET
	4810 021	1	J, U				DG6		
		1	T				DG6		
		1	T				DGV		
		1	J, U				DGV		
-15									SEAL, Torque Converter Hub
	5222 629	1	J, U				DG6		
		1	T				DG6		
		1	J, U				DGV		
		1	T				DGV		

2006 Liberty (KJ)

SERIES	LINE	BODY	ENGINE	TRANSMISSION
H =HIGHLINE	T =JEEP - 2WD	74 =SPORT UTILITY 4-DR	EKG=3.7L V6 Eng.	DG6=4-Spd. Auto. 42RLE Trans.
M =MEDIUM	J =JEEP - 4WD		ENR=2.8L 4 Cyl Turbo Diesel Eng.	DGV=4-Spd. Auto. VLP Trans.
P =PREMIUM	U =JEEP - 4WD (RHD)		ENJ=2.5L 4 Cyl 16V Turbo Diesel Eng.	DGQ=5-Spd Auto. 5-45RFE Trans.
			ED1=2.4L 4 Cyl DOHC 16v SMPI Eng.	DEH=6-Speed Man. NSG370 Trans.
				DDD=5-Speed HD Man. Trans.
				DDK=5-Speed HD Man. Trans.

Collar, Structural [DG6 / DGV]
Figure 42RLE-250

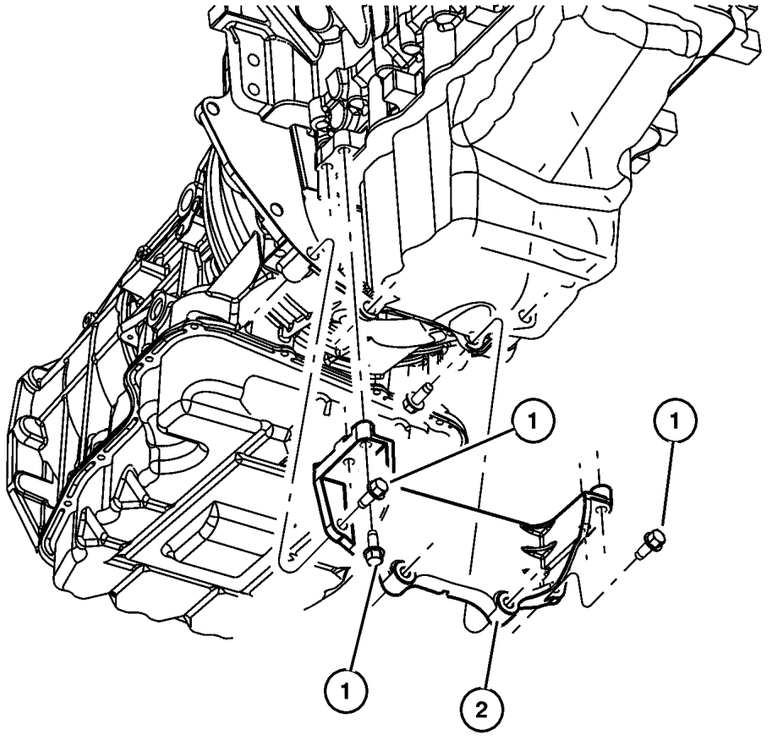

ITEM	PART NUMBER	QTY	LINE	SERIES	BODY	ENGINE	TRANS	TRIM	DESCRIPTION
NOTE:									
Sales Codes:									
[EK0]=All 3.7L V-6 Engines									
1	6101 985	8				EK0			SCREW AND WASHER, M10x1.50x45.00
2	53021 282AA	1				EK0			COVER, Engine

2006 Liberty (KJ)

SERIES	LINE	BODY	ENGINE	TRANSMISSION
H =HIGHLINE	T =JEEP - 2WD	74 =SPORT UTILITY 4-DR	EKG=3.7L V6 Eng.	DG6=4-Spd. Auto. 42RLE Trans.
M =MEDIUM	J =JEEP - 4WD		ENR=2.8L 4 Cyl Turbo Diesel Eng.	DGV=4-Spd. Auto. VLP Trans.
P =PREMIUM	U =JEEP - 4WD (RHD)		ENJ=2.5L 4 Cyl 16V Turbo Diesel Eng.	DGQ=5-Spd Auto. 5-45RFE Trans.
			ED1=2.4L 4 Cyl DOHC 16v SMPI Eng.	DEH=6-Speed Man. NSG370 Trans.
				DDD=5-Speed HD Man. Trans.
				DDK=5-Speed HD Man. Trans.

Oil Fill Tube [DG6 / DGV]
Figure 42RLE-260

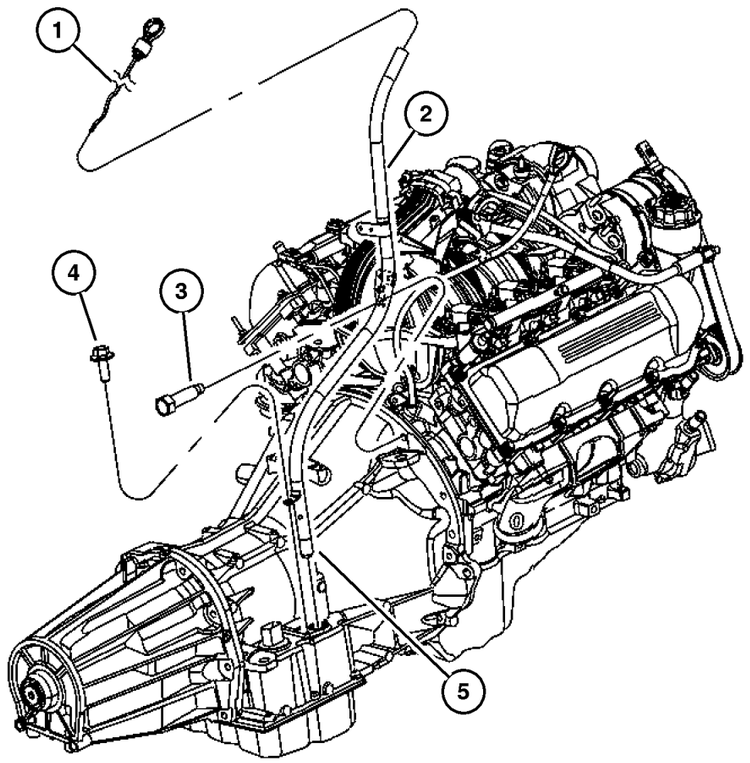

ITEM	PART NUMBER	QTY	LINE	SERIES	BODY	ENGINE	TRANS	TRIM	DESCRIPTION
NOTE:									
Sales Codes:									
[DGV]=4 Speed Automatic Transmission - [42RLE / VLP]									
[DG6]=4 Speed Automatic Transmission - [42RLE]									
1	53013 592AC	1					DG6, DGV		INDICATOR, Transmission Fluid Level
2	53013 591AC	1				EK0	DG6, DGV		TUBE, Transmission Oil Filler
3	6022 266	4				EK0	DG0		SCREW, Hex Head, .375-16x1.5
4	6501 979	1					DG0		SCREW AND WASHER, Hex Head, M6x1x17
5									GROMMET
	4810 021	1	J, U				DG6		
		1	T				DG6		
		1	T				DGV		
		1	J, U				DGV		

2006 Liberty (KJ)

SERIES	LINE	BODY	ENGINE	TRANSMISSION
H =HIGHLINE	T =JEEP - 2WD	74 =SPORT UTILITY 4-DR	EKG=3.7L V6 Eng.	DG6=4-Spd. Auto. 42RLE Trans.
M =MEDIUM	J =JEEP - 4WD		ENR=2.8L 4 Cyl Turbo Diesel Eng.	DGV=4-Spd. Auto. VLP Trans.
P =PREMIUM	U =JEEP - 4WD (RHD)		ENJ=2.5L 4 Cyl 16V Turbo Diesel Eng.	DGQ=5-Spd Auto. 5-45RFE Trans.
			ED1=2.4L 4 Cyl DOHC 16v SMPI Eng.	DEH=6-Speed Man. NSG370 Trans.
				DDD=5-Speed HD Man. Trans.
				DDK=5-Speed HD Man. Trans.

1

4883260	Seal and Gasket Package, Transmission Oil Pump
4883240AB	Seal and Gasket Package, Transmission Front Clutch
5101917AB	Gasket and Seal Package, Valve Body
4800253AA	Gasket, Clutch Retainer
K4659374	Seal,Transmission 2nd & 4th Clutch Piston (D-Ring) Outer
K4659376	Seal,Transmission 2nd & 4th Clutch Piston (D-Ring) Inner
K4659855	Seal, Reverse Clutch inner
K4659856	Seal, Reverse Clutch outer
4431612	Retainer and Seal, Transmission U/Drive Spring
4431610	Piston, Underdrive
4446612	Cup, Parking Brake Sprag
4659946AB	Valve, Cooler Bypass
6501702	Snap Ring, Transmission Input Shaft
4799062	Oring, Speed Sensor
4659980	Snap Ring, Underdrive Clutch
4799858AA	Snap Ring
6504383	Bolt, Flex Plate to Torque Converter

ITEM	PART NUMBER	QTY	LINE	SERIES	BODY	ENGINE	TRANS	TRIM	DESCRIPTION
NOTE:									
Sales Codes:									
[DGV]=4 Speed Automatic Transmission - [42RLE / VLP]									
[DG6]=4 Speed Automatic Transmission - [42RLE]									
1									GASKET PACKAGE, Transmission
	5103 073AA	1	T				DG6		
		1	J, U				DG6		
		1	T				DGV		
		1	J, U				DGV		

2006 Liberty (KJ)

SERIES	LINE	BODY	ENGINE	TRANSMISSION
H =HIGHLINE	T =JEEP - 2WD	74 =SPORT UTILITY 4-DR	EKG=3.7L V6 Eng.	DG6=4-Spd. Auto. 42RLE Trans.
M =MEDIUM	J =JEEP - 4WD		ENR=2.8L 4 Cyl Turbo Diesel Eng.	DGV=4-Spd. Auto. VLP Trans.
P =PREMIUM	U =JEEP - 4WD (RHD)		ENJ=2.5L 4 Cyl 16V Turbo Diesel Eng.	DGQ=5-Spd Auto. 5-45RFE Trans.
			ED1=2.4L 4 Cyl DOHC 16v SMPI Eng.	DEH=6-Speed Man. NSG370 Trans.
				DDD=5-Speed HD Man. Trans.
				DDK=5-Speed HD Man. Trans.

Oil Pump & Reaction Shaft [DG6]
Figure 42RLE-310

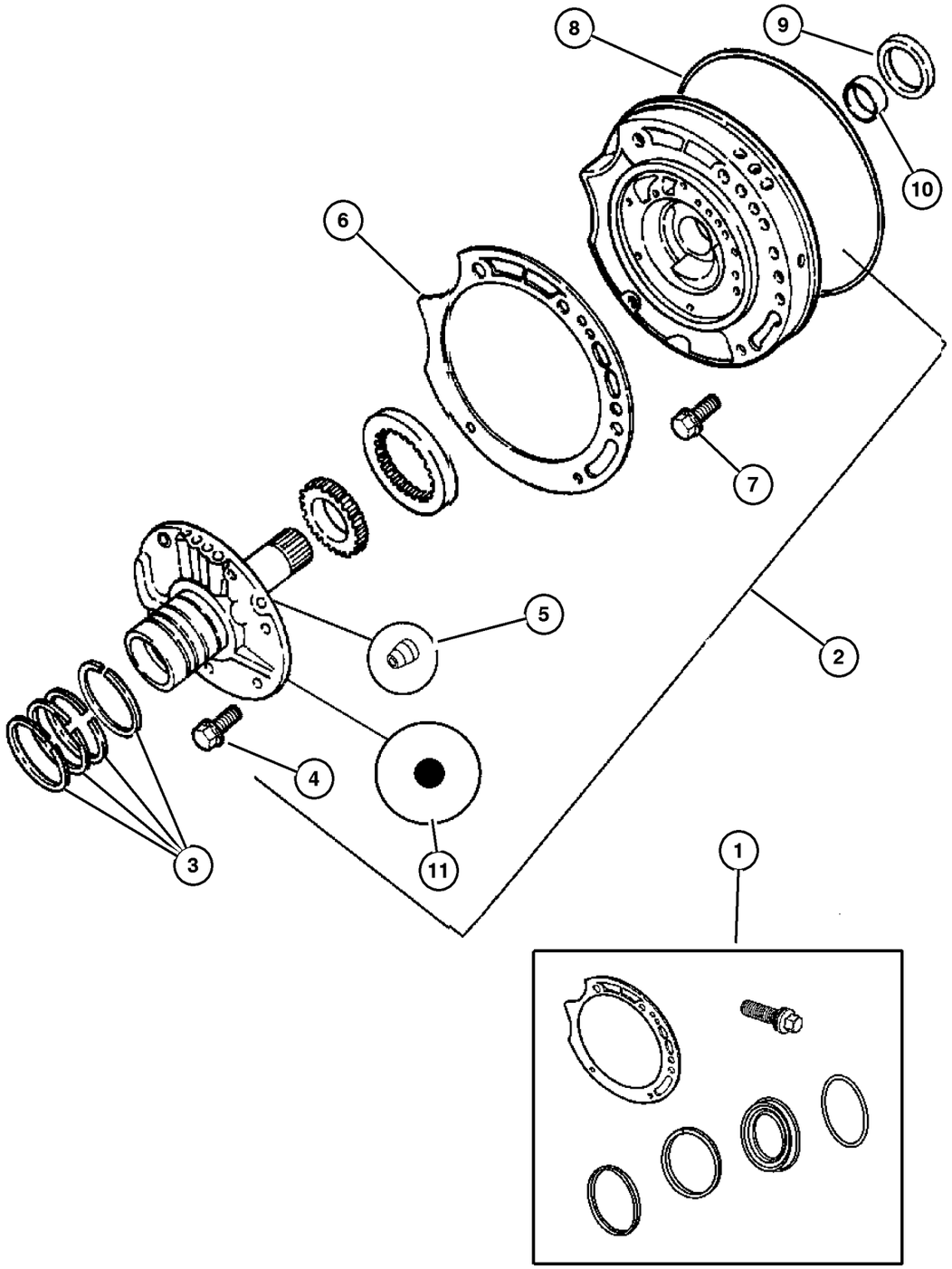

ITEM	PART NUMBER	QTY	LINE	SERIES	BODY	ENGINE	TRANS	TRIM	DESCRIPTION
NOTE:									
Sales Codes:									
[DG6]=4 Speed Automatic Transmission - [42RLE]									
1									SEAL AND GASKET PACKAGE, Transmission Oil Pump
	4883 260AB	1	T				DG6		
		1	J, U				DG6		
2									PUMP, Transmission Oil
	5127 199AA	1	J, U				DG6		
		1	T				DG6		
3									SEAL, Ring Reaction Support, 2 1/16 O.D.
	4471 874	4	J, U				DG6		
		4	T				DG6		
4									BOLT, Hex Head, M8x1.25x19
	6500 211	6	J, U				DG6		
		6	T				DG6		
5									BALL, Check
	0147 482	2	J, U				DG6		
		2	T				DG6		
6									GASKET, Transmission Oil Pump
	4412 844	1	J, U				DG6		
		1	T				DG6		
7									SCREW AND WASHER, Hex Flange Head, M8x1.25x25
	6506 408AA	5	J, U				DG6		
		5	T				DG6		
8									SEAL, Oil Pump
	4659 945	1	J, U				DG6		
		1	T				DG6		
9									BUSHING, Front Pump
	4659 515	1	J, U				DG6		
		1	T				DG6		
10									SEAL, Impeller Hub, 57.25mm OD
	4412 475	1	J, U				DG6		
		1	T				DG6		
11									BALL, Transmission Oil Pump
	0152 127	11	J, U				DG6		
		1	T				DG6		

2006 Liberty (KJ)

SERIES	LINE	BODY	ENGINE	TRANSMISSION
H =HIGHLINE	T =JEEP - 2WD	74 =SPORT UTILITY 4-DR	EKG=3.7L V6 Eng.	DG6=4-Spd. Auto. 42RLE Trans.
M =MEDIUM	J =JEEP - 4WD		ENR=2.8L 4 Cyl Turbo Diesel Eng.	DGV=4-Spd. Auto. VLP Trans.
P =PREMIUM	U =JEEP - 4WD (RHD)		ENJ=2.5L 4 Cyl 16V Turbo Diesel Eng.	DGQ=5-Spd Auto. 5-45RFE Trans.
			ED1=2.4L 4 Cyl DOHC 16v SMPI Eng.	DEH=6-Speed Man. NSG370 Trans.
				DDD=5-Speed HD Man. Trans.
				DDK=5-Speed HD Man. Trans.

Oil Pump & Reaction Shaft [DGV]
Figure 42RLE-320

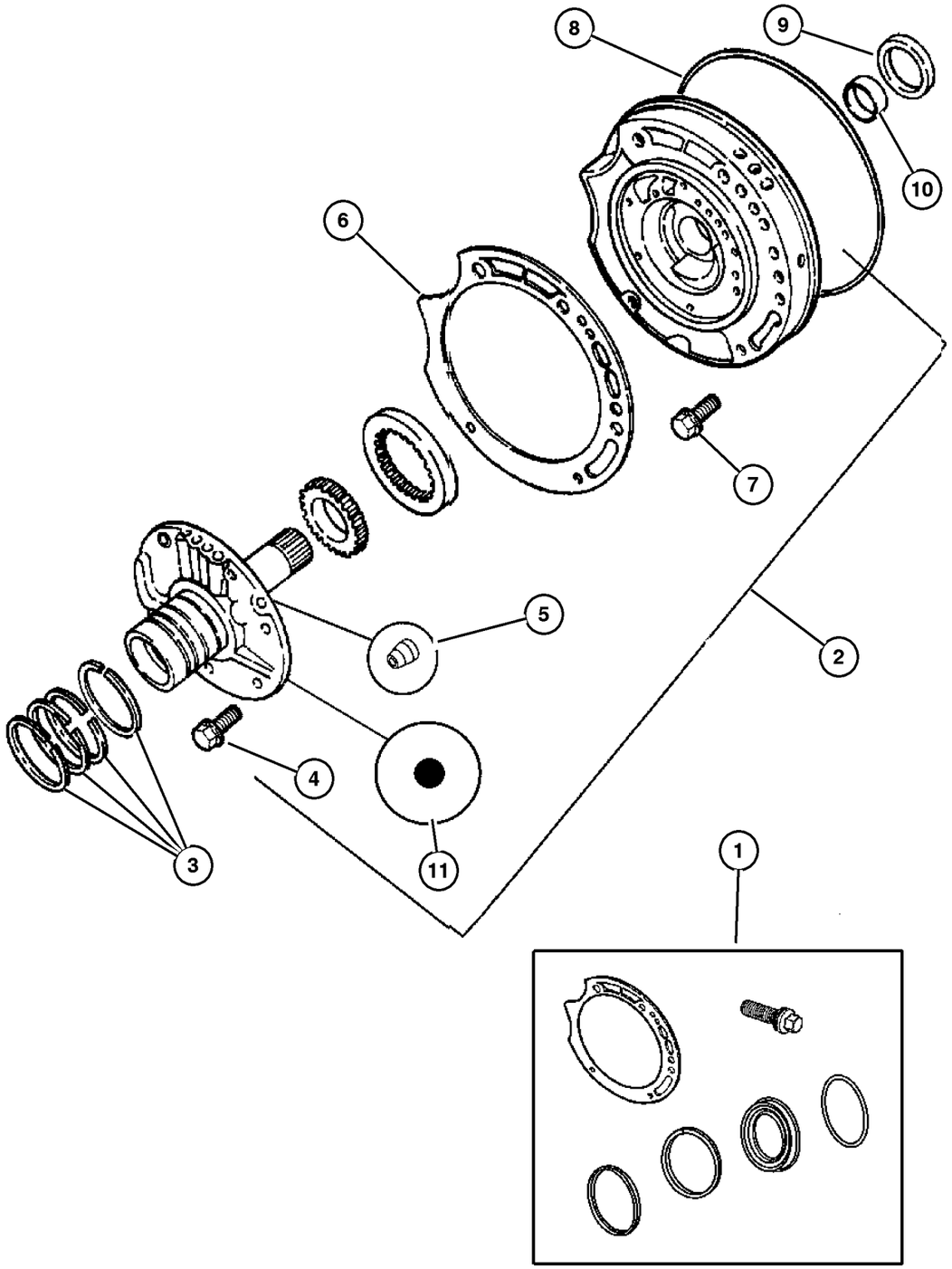

ITEM	PART NUMBER	QTY	LINE	SERIES	BODY	ENGINE	TRANS	TRIM	DESCRIPTION
NOTE:									
Sales Codes:									
[DGV]=4 Speed Automatic Transmission - [42RLE / VLP]									
1									SEAL AND GASKET PACKAGE, Transmission Oil Pump
	4883 260AB	1	T				DGV		
		1	J, U				DGV		
2									PUMP, Transmission Oil
	5127 197AA	1	T				DGV		
	5127 199AA	1	J, U				DGV		
3									SEAL, Ring Reaction Support, 2 1/16 O.D.
	4471 874	4	J, U				DGV		
		4	T				DGV		
4									BOLT, Hex Head, M8x1.25x19
	6500 211	6	J, U				DGV		
		6	T				DGV		
5									BALL, Check
	0147 482	2	J, U				DGV		
		2	T				DGV		
6									GASKET, Transmission Oil Pump
	4412 844	1	T				DGV		
		1	J, U				DGV		
7									SCREW AND WASHER, Hex Flange Head, M8x1.25x25
	6506 408AA	5	T				DGV		
		5	J, U				DGV		
8									SEAL, Oil Pump
	4659 945	1	J, U				DGV		
		1	T				DGV		
9									BUSHING, Front Pump
	4659 515	1	J, U				DGV		
		1	T				DGV		
10									SEAL, Impeller Hub, 57.25mm OD
	4412 475	1	J, U				DGV		
		1	T				DGV		
11									BALL, Transmission Oil Pump
	0152 127	1	T				DGV		
		1	J, U				DGV		

2006 Liberty (KJ)

SERIES	LINE	BODY	ENGINE	TRANSMISSION
H =HIGHLINE	T =JEEP - 2WD	74 =SPORT UTILITY 4-DR	EKG=3.7L V6 Eng.	DG6=4-Spd. Auto. 42RLE Trans.
M =MEDIUM	J =JEEP - 4WD		ENR=2.8L 4 Cyl Turbo Diesel Eng.	DGV=4-Spd. Auto. VLP Trans.
P =PREMIUM	U =JEEP - 4WD (RHD)		ENJ=2.5L 4 Cyl 16V Turbo Diesel Eng.	DGQ=5-Spd Auto. 5-45RFE Trans.
			ED1=2.4L 4 Cyl DOHC 16v SMPI Eng.	DEH=6-Speed Man. NSG370 Trans.
				DDD=5-Speed HD Man. Trans.
				DDK=5-Speed HD Man. Trans.

Clutch, Input Shaft [DG6]
Figure 42RLE-410

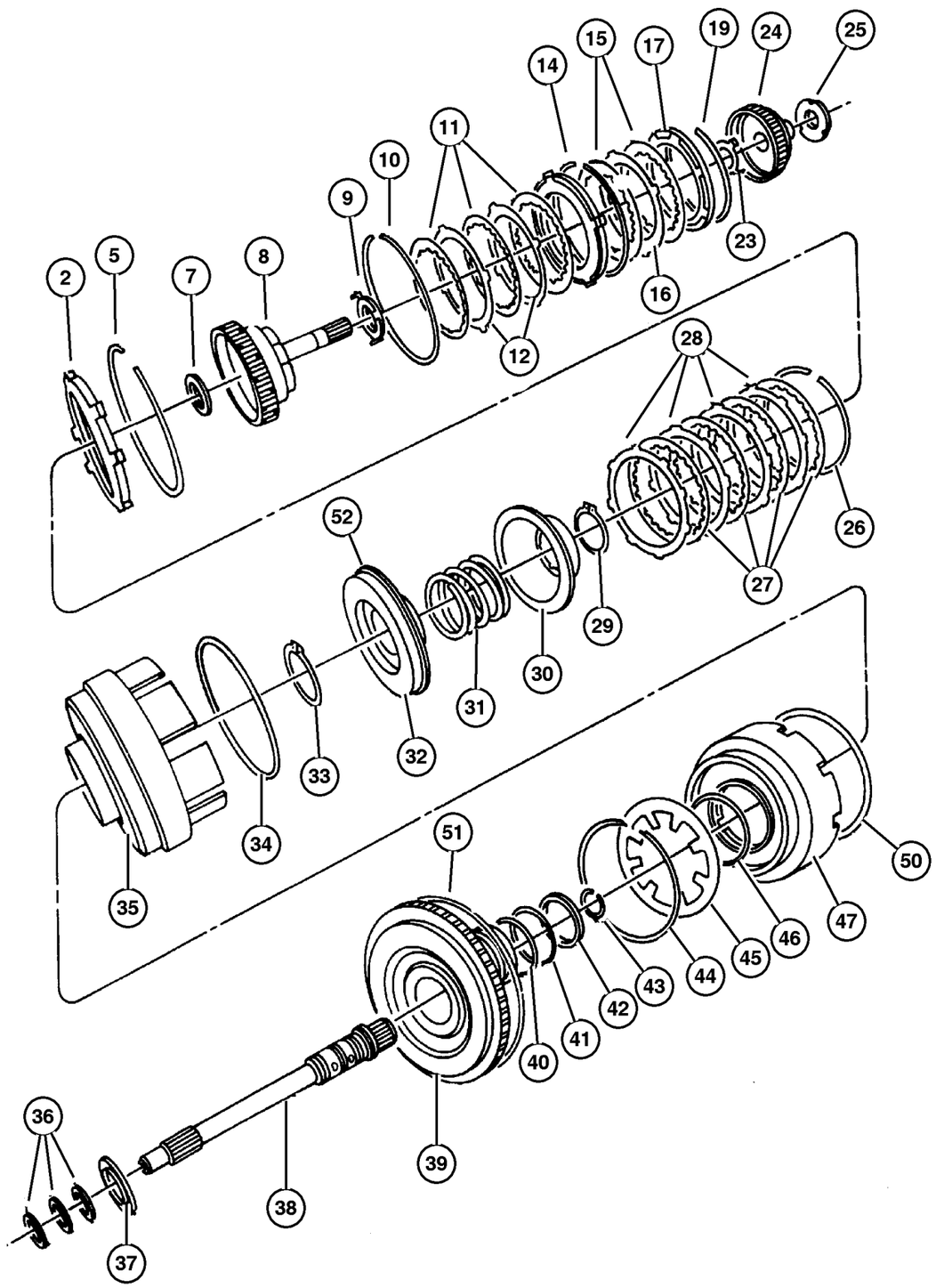

ITEM	PART NUMBER	QTY	LINE	SERIES	BODY	ENGINE	TRANS	TRIM	DESCRIPTION
NOTE:									
Sales Codes:									
[DG6]=4 Speed Automatic Transmission - [42RLE]									
-1									SEAL AND GASKET PACKAGE, Transmission Front Clutch
	4883 240AB-	1	T				DG6		
		1	J, U				DG6		
2									PLATE PACKAGE, Underdrive Reaction, 5.72/5.82
	4883 013AB	1	J, U				DG6		
		1	T				DG6		
-3									PLATE PACKAGE, Underdrive Reaction, 6.21/6.31
	4883 014AB-	1	J, U				DG6		
		1	T				DG6		
-4									PLATE PACKAGE, Underdrive Reaction, 6.70/6.80
	4883 015AB-	1	J, U				DG6		
		1	T				DG6		
5									SNAP RING, Underdrive Clutch, Tapered
	4659 934	1	J, U				DG6		
		1	T				DG6		
-6									SNAP RING, Underdrive Clutch, Flat
	4659 980	1	J, U				DG6		
		1	T				DG6		
7									THRUST BEARING
	4800 082AA	1	T				DG6		
		1	J, U				DG6		
8									HUB AND SHAFT PACKAGE, Underdrive Clutch
	4864 936AC	1	T				DG6		
		1	J, U				DG6		
9									PLATE AND WASHER PACKAGE, Thrust
	5018 923AA	1	T				DG6		
		1	J, U				DG6		
10									SNAP RING
	4505 621	1	T				DG6		
		1	J, U				DG6		
11									DISC, Clutch
	4531 678	2	T				DG6		

2006 Liberty (KJ)

SERIES	LINE	BODY	ENGINE	TRANSMISSION
H =HIGHLINE	T =JEEP - 2WD	74 =SPORT UTILITY 4-DR	EKG=3.7L V6 Eng.	DG6=4-Spd. Auto. 42RLE Trans.
M =MEDIUM	J =JEEP - 4WD		ENR=2.8L 4 Cyl Turbo Diesel Eng.	DGV=4-Spd. Auto. VLP Trans.
P =PREMIUM	U =JEEP - 4WD (RHD)		ENJ=2.5L 4 Cyl 16V Turbo Diesel Eng.	DGQ=5-Spd Auto. 5-45RFE Trans.
			ED1=2.4L 4 Cyl DOHC 16v SMPI Eng.	DEH=6-Speed Man. NSG370 Trans.
				DDD=5-Speed HD Man. Trans.
				DDK=5-Speed HD Man. Trans.

Clutch, Input Shaft [DG6]
Figure 42RLE-410

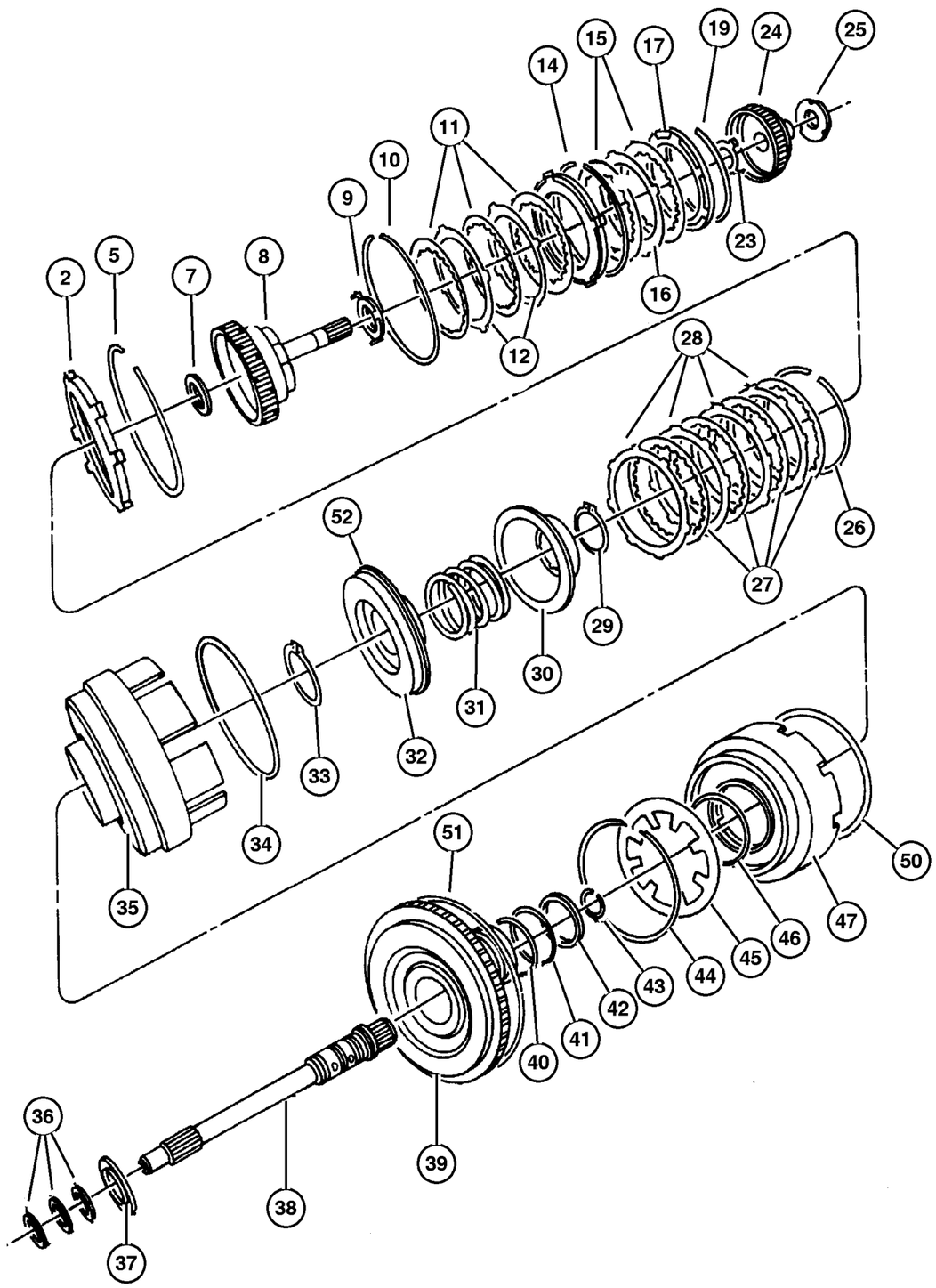

ITEM	PART NUMBER	QTY	LINE	SERIES	BODY	ENGINE	TRANS	TRIM	DESCRIPTION
		4	J, U				DG6		
12									PLATE, Transmission O/Drive Clutch
	4659 053	3	J, U				DG6		
		4	T				DG6		
-13									HUB PACKAGE, Input Clutch
	5017 518AB-	1	J, U				DG6		
		1	T				DG6		
14									SNAP RING
	4505 622	1	T				DG6		
		1	J, U				DG6		
15									DISC, Clutch
	4531 678	2	J, U				DG6		
		4	T				DG6		
16									PLATE, Transmission O/Drive Clutch
	4659 053	4	J, U				DG6		
		4	T				DG6		
17									PLATE, Transmission Clutch Reaction
	4377 194	1	T				DG6		
		1	J, U				DG6		
-18									PLATE, Transmission O/Drive Clutch
	4531 556AD-	1	T				DG6		
		1	J, U				DG6		
19									SNAP RING
	4377 195	1	J, U				DG6		
		1	T				DG6		
-20									SNAP RING, Reverse Clutch, 1.77-1.83mm
	4412 871	1	J, U				DG6		
		1	T				DG6		
-21									SNAP RING, Reverse Clutch, 2.02-2.07mm
	4412 872	1	J, U				DG6		
		1	T				DG6		
-22									SNAP RING, Reverse Clutch, 2.27-2.32mm
	4412 873	1	J, U				DG6		
		1	T				DG6		
23									PLATE AND WASHER PACKAGE, Thrust
	5018 923AA	1	T				DG6		
		1	J, U				DG6		
24									HUB AND SHAFT, Overdrive Clutch

2006 Liberty (KJ)

SERIES	LINE	BODY	ENGINE	TRANSMISSION
H =HIGHLINE	T =JEEP - 2WD	74 =SPORT UTILITY 4-DR	EKG=3.7L V6 Eng.	DG6=4-Spd. Auto. 42RLE Trans.
M =MEDIUM	J =JEEP - 4WD		ENR=2.8L 4 Cyl Turbo Diesel Eng.	DGV=4-Spd. Auto. VLP Trans.
P =PREMIUM	U =JEEP - 4WD (RHD)		ENJ=2.5L 4 Cyl 16V Turbo Diesel Eng.	DGQ=5-Spd Auto. 5-45RFE Trans.
			ED1=2.4L 4 Cyl DOHC 16v SMPI Eng.	DEH=6-Speed Man. NSG370 Trans.
				DDD=5-Speed HD Man. Trans.
				DDK=5-Speed HD Man. Trans.

Clutch, Input Shaft [DG6]
Figure 42RLE-410

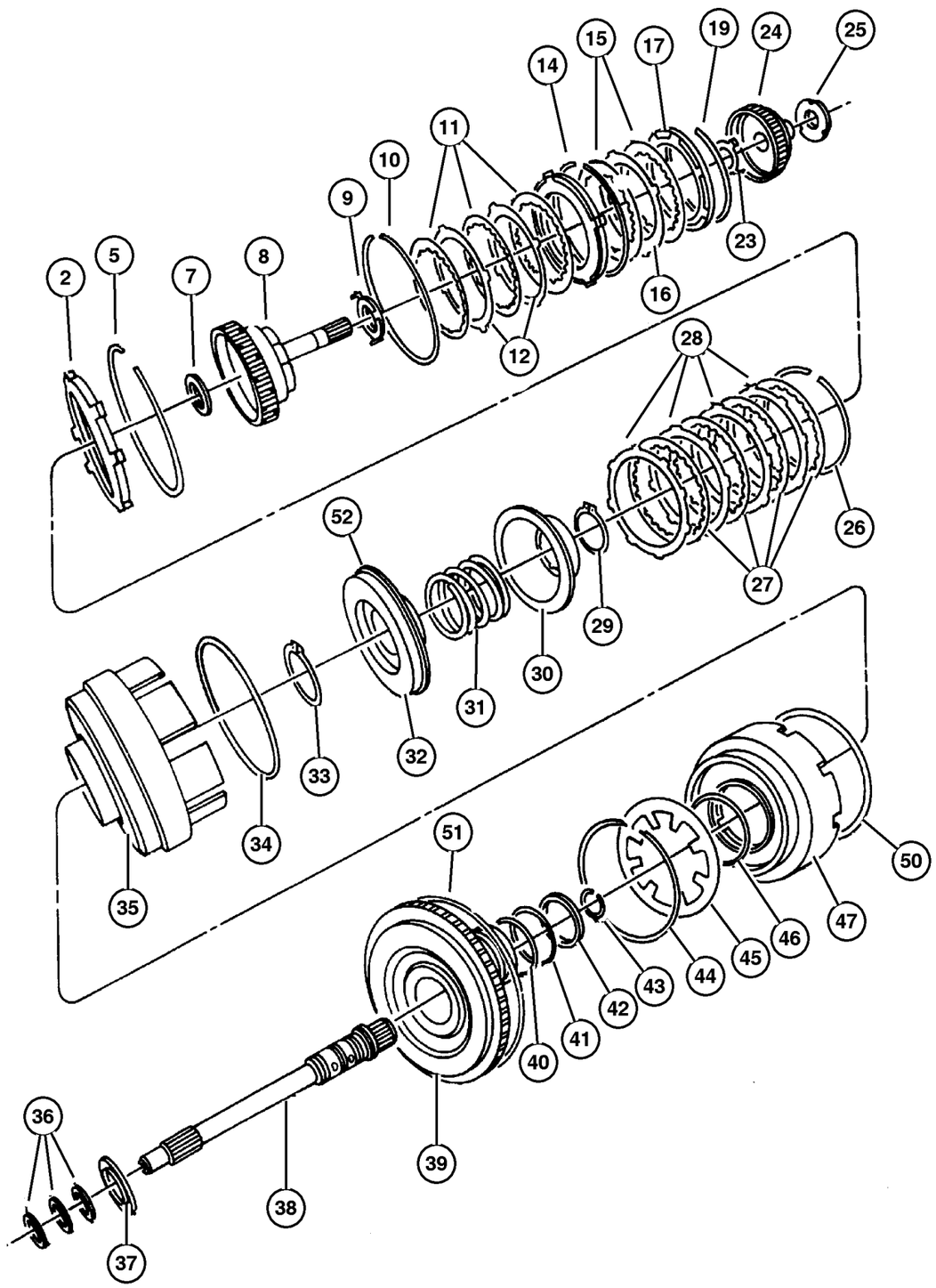

ITEM	PART NUMBER	QTY	LINE	SERIES	BODY	ENGINE	TRANS	TRIM	DESCRIPTION
	4659 993	1	J, U				DG6		
		1	T				DG6		
25									PLATE, Transmission O/Drive Clutch
	3836 237AB	AR	J, U				DG6		[1.70/1.77MM]
		AR	T				DG6		[1.70/1.77MM]
	3836 238AB	AR	J, U				DG6		[1.92/1.99MM]
		AR	T				DG6		[1.92/1.99MM]
	3836 239AB	AR	J, U				DG6		[2.14/2.21MM]
		AR	T				DG6		[2.14/2.21MM]
	3836 240AB	AR	J, U				DG6		[2.36/2.43MM]
		AR	T				DG6		[2.36/2.43MM]
	3836 241AB	AR	J, U				DG6		[2.58/2.65MM]
		AR	T				DG6		[2.58/2.65MM]
	4431 665AB	AR	J, U				DG6		[1.55/1.66MM]
		AR	T				DG6		[1.55/1.66MM]
	4431 666AB	AR	J, U				DG6		[1.81/1.88MM]
		AR	T				DG6		[1.81/1.88MM]
	4431 667AB	AR	J, U				DG6		[2.03/2.10MM]
		AR	T				DG6		[2.03/2.10MM]
	4431 668AB	AR	J, U				DG6		[2.25/2.32MM]
		AR	T				DG6		[2.25/2.32MM]
	4431 669AB	AR	J, U				DG6		[2.47/2.52MM]
		AR	T				DG6		[2.47/2.52MM]
	4446 670AB	AR	J, U				DG6		[2.69/2.76MM]
		AR	T				DG6		[2.69/2.76MM]
	4446 671AB	AR	J, U				DG6		[2.91/2.98MM]
		AR	T				DG6		[2.91/2.98MM]
26									SNAP RING, Underdrive Clutch, Flat
	4659 980	1	J, U				DG6		
		1	T				DG6		
27									DISC, Clutch
	4531 678	4	T				DG6		
		4	J, U				DG6		
28									PLATE, Transmission O/Drive Clutch
	4659 053	4	J, U				DG6		
		4	T				DG6		
29									SNAP RING
	6501 715	1	T				DG6		
		1	J, U				DG6		
30									RETAINER AND SEAL, Transmission U/Drive Spring
	4431 612	1	T				DG6		

2006 Liberty (KJ)

SERIES	LINE	BODY	ENGINE	TRANSMISSION
H =HIGHLINE	T =JEEP - 2WD	74 =SPORT UTILITY 4-DR	EKG=3.7L V6 Eng.	DG6=4-Spd. Auto. 42RLE Trans.
M =MEDIUM	J =JEEP - 4WD		ENR=2.8L 4 Cyl Turbo Diesel Eng.	DGV=4-Spd. Auto. VLP Trans.
P =PREMIUM	U =JEEP - 4WD (RHD)		ENJ=2.5L 4 Cyl 16V Turbo Diesel Eng.	DGQ=5-Spd Auto. 5-45RFE Trans.
			ED1=2.4L 4 Cyl DOHC 16v SMPI Eng.	DEH=6-Speed Man. NSG370 Trans.
				DDD=5-Speed HD Man. Trans.
				DDK=5-Speed HD Man. Trans.

Clutch, Input Shaft [DG6]
Figure 42RLE-410

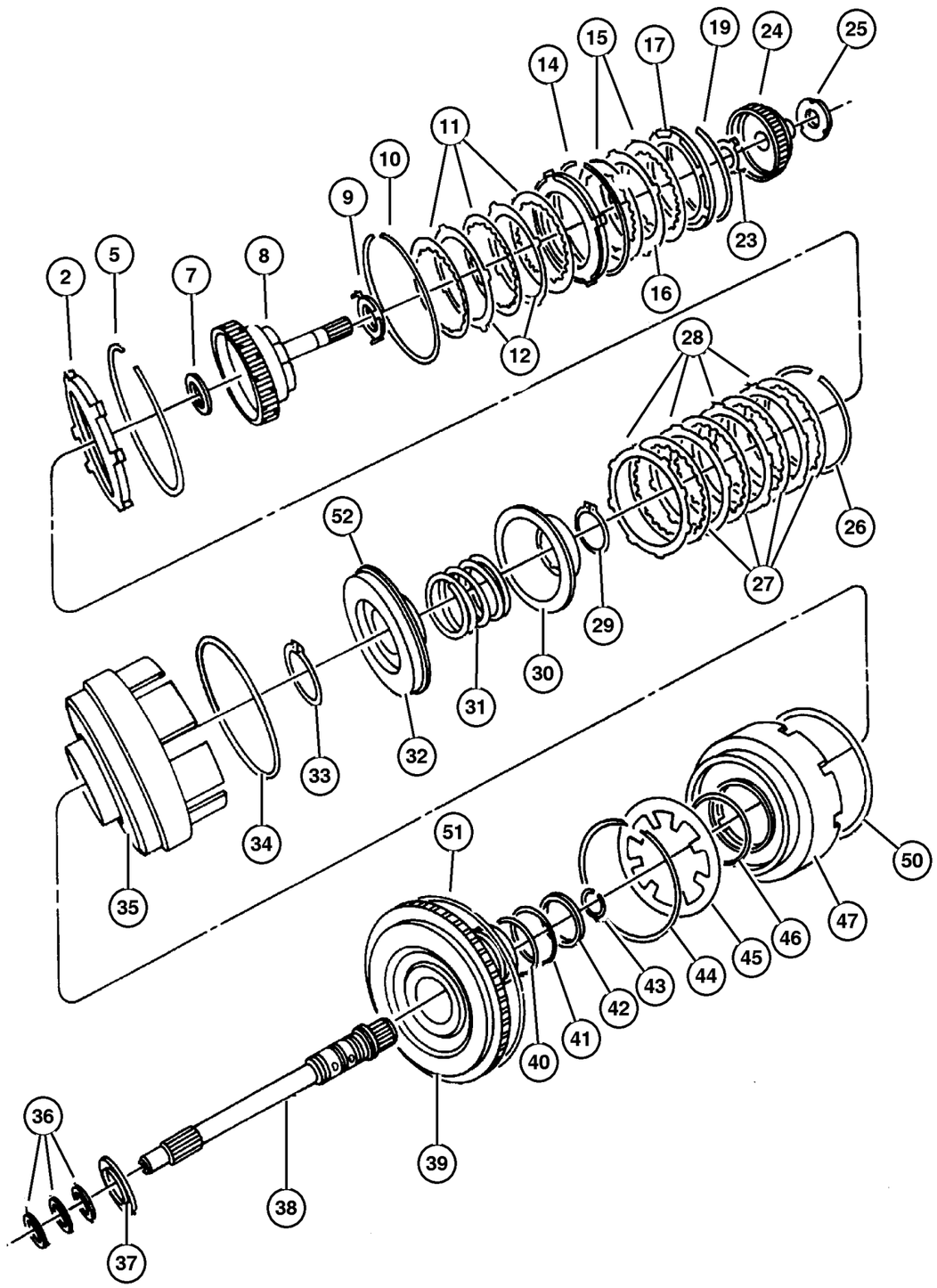

ITEM	PART NUMBER	QTY	LINE	SERIES	BODY	ENGINE	TRANS	TRIM	DESCRIPTION
		1	J, U				DG6		
31									SPRING, Drive Lower Case
	4377 177	1	T				DG6		
		1	J, U				DG6		
32									GASKET PACKAGE, Transmission
	5103 073AA	1	T				DG6		
		1	J, U				DG6		
33									SNAP RING
	6507 226AA	1	T				DG6		
		1	J, U				DG6		
34									SEAL, Piston Outer, 140mm OD
	4659 871	1	J, U				DG6		
		1	T				DG6		
35									RETAINER, Transmission Input Clutch
	4659 935	1	J, U				DG6		
		1	T				DG6		
36									SEAL, Input Shaft
	4446 543	3	T				DG6		
		3	J, U				DG6		
37									THRUST BEARING
	4412 209	1	J, U				DG6		
		1	T				DG6		
38									INPUT SHAFT PACKAGE, Transaxle
	4626 452AB	1	T				DG6		
		1	J, U				DG6		
39									HUB, Input Clutch, Serviced in Assembly, (NOT SERVICED) (Not Serviced)
40									O RING, Transmission Clutch
	6502 271	1	T				DG6		
		1	J, U				DG6		
41									O RING, Transmission Clutch
	6502 269	1	J, U				DG6		
		2	T				DG6		
42									SEAL, Under Drive
	4659 391AB	1	J, U				DG6		
		1	T				DG6		
43									SNAP RING
	6501 702	1	T				DG6		
		1	J, U				DG6		
44									SNAP RING

2006 Liberty (KJ)

SERIES	LINE	BODY	ENGINE	TRANSMISSION
H =HIGHLINE	T =JEEP - 2WD	74 =SPORT UTILITY 4-DR	EKG=3.7L V6 Eng.	DG6=4-Spd. Auto. 42RLE Trans.
M =MEDIUM	J =JEEP - 4WD		ENR=2.8L 4 Cyl Turbo Diesel Eng.	DGV=4-Spd. Auto. VLP Trans.
P =PREMIUM	U =JEEP - 4WD (RHD)		ENJ=2.5L 4 Cyl 16V Turbo Diesel Eng.	DGQ=5-Spd Auto. 5-45RFE Trans.
			ED1=2.4L 4 Cyl DOHC 16v SMPI Eng.	DEH=6-Speed Man. NSG370 Trans.
				DDD=5-Speed HD Man. Trans.
				DDK=5-Speed HD Man. Trans.

Clutch, Input Shaft [DG6]
Figure 42RLE-410

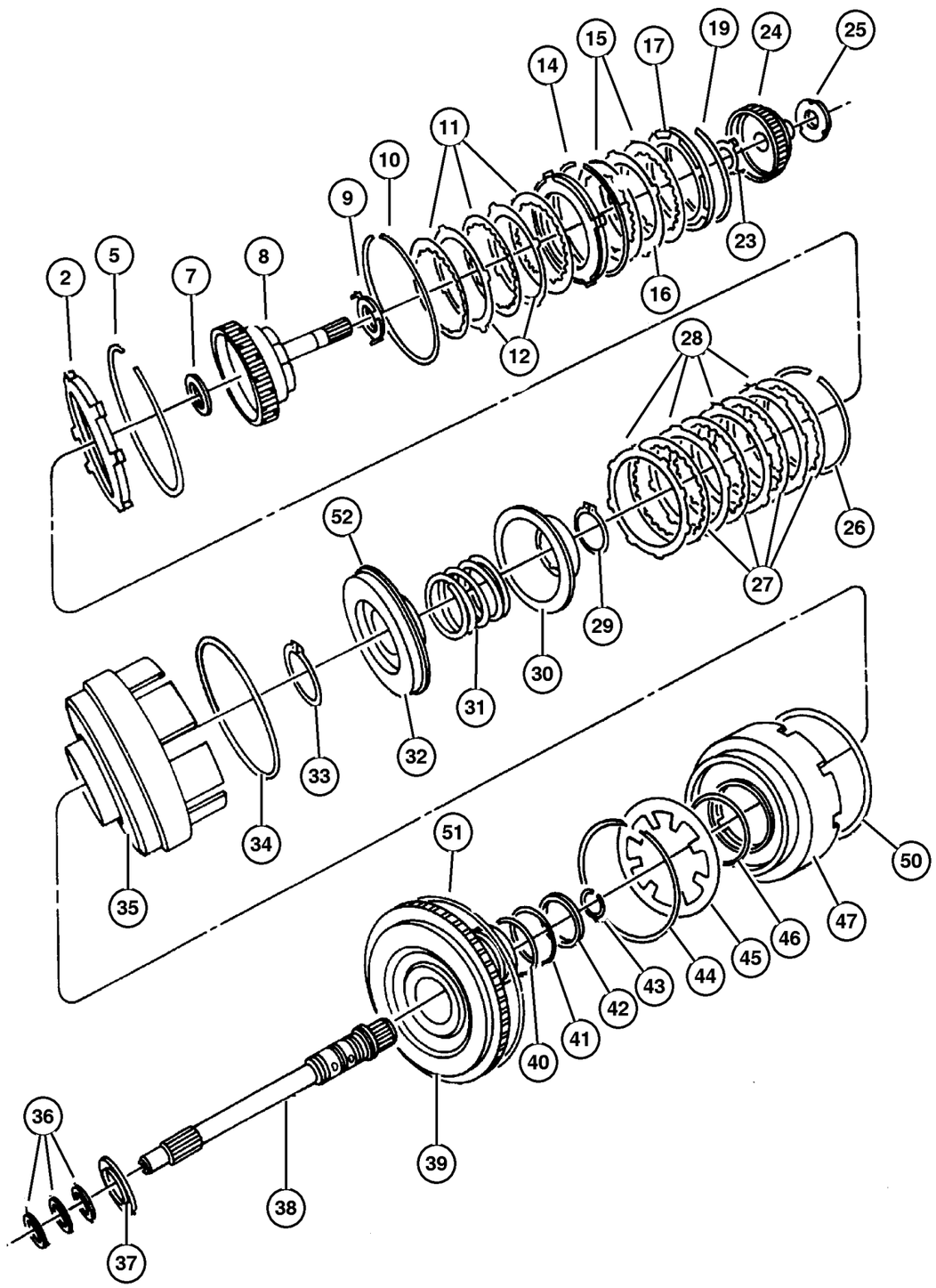

ITEM	PART NUMBER	QTY	LINE	SERIES	BODY	ENGINE	TRANS	TRIM	DESCRIPTION
	4412 203	1	T				DG6		
		1	J, U				DG6		
45									SPRING, Overdrive Piston
	4412 202	1	T				DG6		
		1	J, U				DG6		
46									O RING, Reverse & O/Drive Clutch Piston, Transmission
	6033 158	1	T				DG6		
		1	J, U				DG6		
47									HUB PACKAGE, Input Clutch
	5017 518AB	1	J, U				DG6		
		1	T				DG6		
-48									PISTON, Reverse and Overdrive, Serviced in Assembly, (NOT SERVICED) (Not Serviced)
-49									FILTER, Reverse And O/D Clutch
	4531 903	1	J, U				DG6		
		1	T				DG6		
50									SEAL, Reverse Servo Piston
	4659 056	1	T				DG6		
		1	J, U				DG6		
51									SEAL, Reverse Servo Piston
	4659 056	1	T				DG6		
		1	J, U				DG6		
52									PISTON, Underdrive
	4431 610	1	T				DG6		
		1	J, U				DG6		

2006 Liberty (KJ)

SERIES	LINE	BODY	ENGINE	TRANSMISSION
H =HIGHLINE	T =JEEP - 2WD	74 =SPORT UTILITY 4-DR	EKG=3.7L V6 Eng.	DG6=4-Spd. Auto. 42RLE Trans.
M =MEDIUM	J =JEEP - 4WD		ENR=2.8L 4 Cyl Turbo Diesel Eng.	DGV=4-Spd. Auto. VLP Trans.
P =PREMIUM	U =JEEP - 4WD (RHD)		ENJ=2.5L 4 Cyl 16V Turbo Diesel Eng.	DGQ=5-Spd Auto. 5-45RFE Trans.
			ED1=2.4L 4 Cyl DOHC 16v SMPI Eng.	DEH=6-Speed Man. NSG370 Trans.
				DDD=5-Speed HD Man. Trans.
				DDK=5-Speed HD Man. Trans.

AR = Use as required - = Non illustrated part # = New this model year

Clutch, Input Shaft [DGV]
Figure 42RLE-420

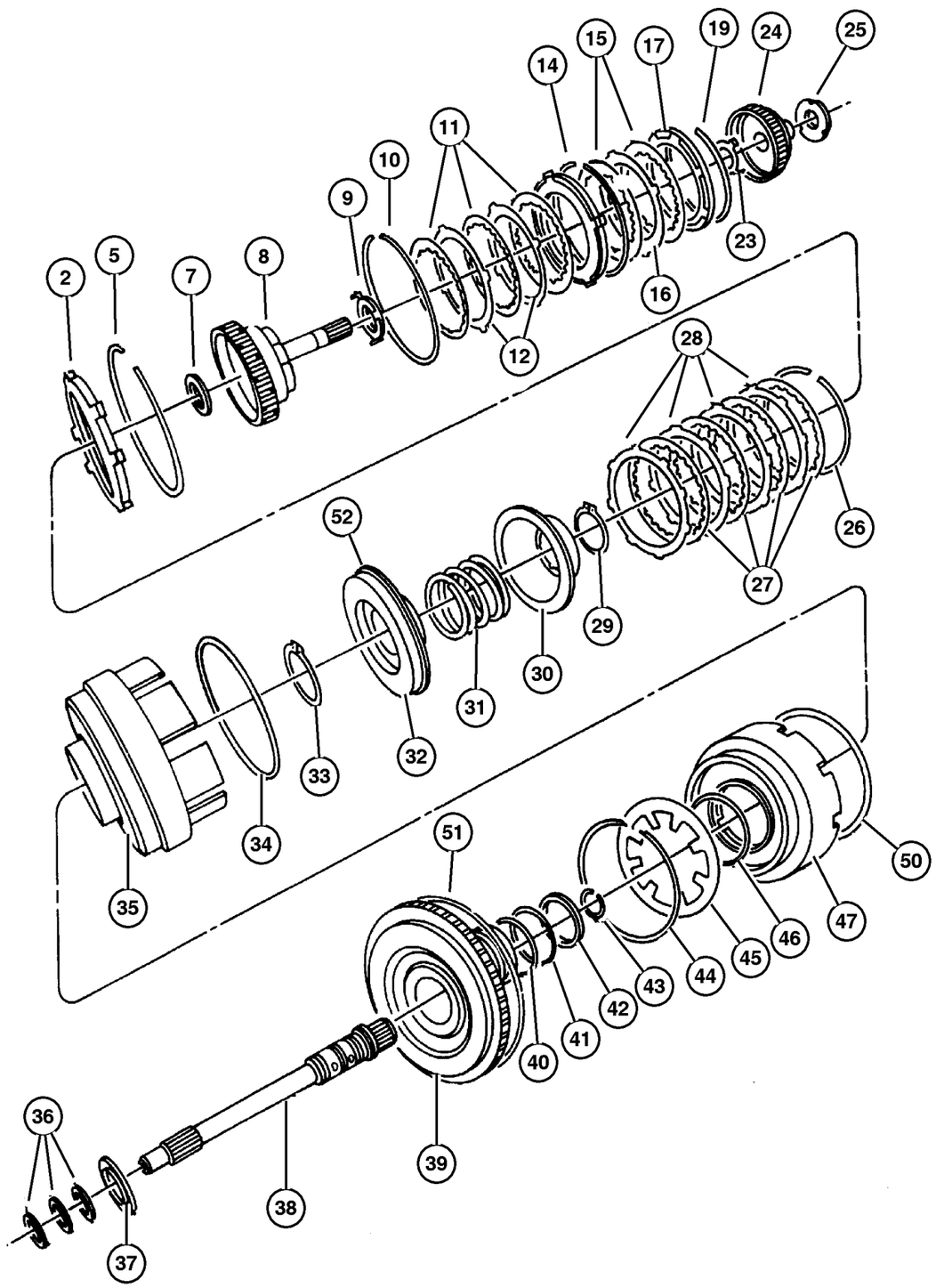

ITEM	PART NUMBER	QTY	LINE	SERIES	BODY	ENGINE	TRANS	TRIM	DESCRIPTION
NOTE:									
Sales Codes:									
[DGV]=4 Speed Automatic Transmission - [42RLE / VLP]									
-1									SEAL AND GASKET PACKAGE, Transmission Front Clutch
	4883 240AB-	1	T				DGV		
		1	J, U				DGV		
2									PLATE PACKAGE, Underdrive Reaction, 5.72/5.82
	4883 013AB	1	J, U				DGV		
		1	T				DGV		
-3									PLATE PACKAGE, Underdrive Reaction, 6.21/6.31
	4883 014AB-	1	J, U				DGV		
		1	T				DGV		
-4									PLATE PACKAGE, Underdrive Reaction, 6.70/6.80
	4883 015AB-	1	J, U				DGV		
		1	T				DGV		
5									SNAP RING, Underdrive Clutch, Tapered
	4659 934	1	T				DGV		
		1	J, U				DGV		
-6									SNAP RING, Underdrive Clutch, Flat
	4659 980	1	T				DGV		
		1	J, U				DGV		
7									THRUST BEARING
	4800 082AA	1	T				DGV		
		1	J, U				DGV		
8									HUB AND SHAFT PACKAGE, Underdrive Clutch
	4864 936AC	1	T				DGV		
		1	J, U				DGV		
9									PLATE AND WASHER PACKAGE, Thrust
	5018 923AA	1	T				DGV		
		1	J, U				DGV		
10									SNAP RING
	4505 621	1	T				DGV		
		1	J, U				DGV		
11									DISC, Clutch
	4531 678	2	T				DGV		

2006 Liberty (KJ)

SERIES	LINE	BODY	ENGINE	TRANSMISSION
H =HIGHLINE	T =JEEP - 2WD	74 =SPORT UTILITY 4-DR	EKG=3.7L V6 Eng.	DG6=4-Spd. Auto. 42RLE Trans.
M =MEDIUM	J =JEEP - 4WD		ENR=2.8L 4 Cyl Turbo Diesel Eng.	DGV=4-Spd. Auto. VLP Trans.
P =PREMIUM	U =JEEP - 4WD (RHD)		ENJ=2.5L 4 Cyl 16V Turbo Diesel Eng.	DGQ=5-Spd Auto. 5-45RFE Trans.
			ED1=2.4L 4 Cyl DOHC 16v SMPI Eng.	DEH=6-Speed Man. NSG370 Trans.
				DDD=5-Speed HD Man. Trans.
				DDK=5-Speed HD Man. Trans.

Clutch, Input Shaft [DGV]
Figure 42RLE-420

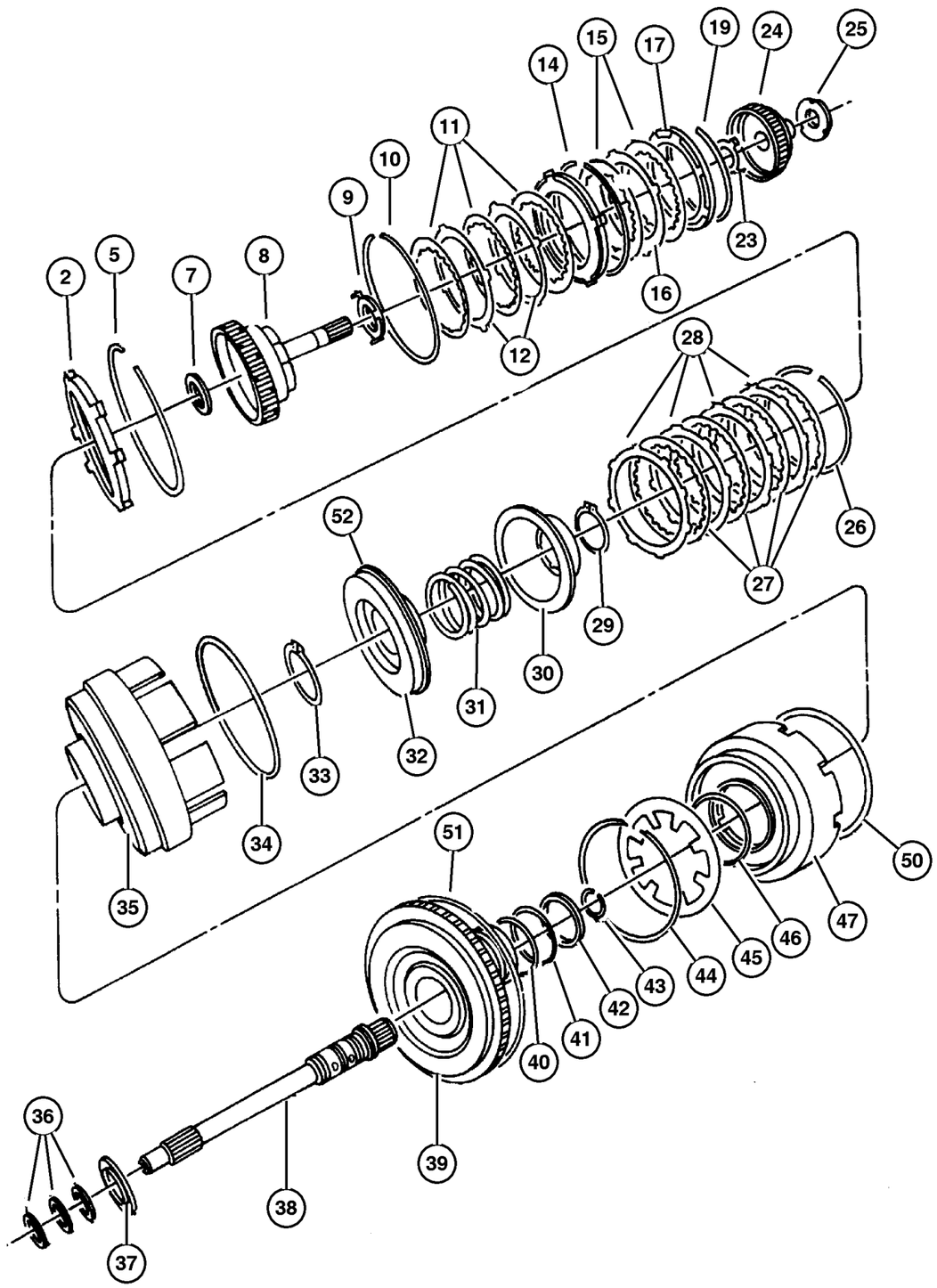

ITEM	PART NUMBER	QTY	LINE	SERIES	BODY	ENGINE	TRANS	TRIM	DESCRIPTION
		4	J, U				DGV		
12									PLATE, Transmission O/Drive Clutch
	4659 053	1	T				DGV		
		4	J, U				DGV		
-13									HUB PACKAGE, Input Clutch
	5017 518AB-	1	J, U				DGV		
		1	T				DGV		
14									SNAP RING
	4505 622	1	T				DGV		
		1	J, U				DGV		
15									DISC, Clutch
	4531 678	4	J, U				DGV		
		4	T				DGV		
16									PLATE, Transmission O/Drive Clutch
	4659 053	4	T				DGV		
		4	J, U				DGV		
17									PLATE, Transmission Clutch Reaction
	4377 194	1	J, U				DGV		
		1	T				DGV		
-18									PLATE, Transmission O/Drive Clutch
	4531 556AD-	1	J, U				DGV		
		1	T				DGV		
19									SNAP RING
	4377 195	1	J, U				DGV		
		1	T				DGV		
-20									SNAP RING, Reverse Clutch, 1.77-1.83mm
	4412 871	1	J, U				DGV		
		1	T				DGV		
-21									SNAP RING, Reverse Clutch, 2.02-2.07mm
	4412 872	1	J, U				DGV		
		1	T				DGV		
-22									SNAP RING, Reverse Clutch, 2.27-2.32mm
	4412 873	1	J, U				DGV		
		1	T				DGV		
23									PLATE AND WASHER PACKAGE, Thrust
	5018 923AA	1	T				DGV		
		1	J, U				DGV		
24									HUB AND SHAFT, Overdrive Clutch

2006 Liberty (KJ)

SERIES	LINE	BODY	ENGINE	TRANSMISSION
H =HIGHLINE	T =JEEP - 2WD	74 =SPORT UTILITY 4-DR	EKG=3.7L V6 Eng.	DG6=4-Spd. Auto. 42RLE Trans.
M =MEDIUM	J =JEEP - 4WD		ENR=2.8L 4 Cyl Turbo Diesel Eng.	DGV=4-Spd. Auto. VLP Trans.
P =PREMIUM	U =JEEP - 4WD (RHD)		ENJ=2.5L 4 Cyl 16V Turbo Diesel Eng.	DGQ=5-Spd Auto. 5-45RFE Trans.
			ED1=2.4L 4 Cyl DOHC 16v SMPI Eng.	DEH=6-Speed Man. NSG370 Trans.
				DDD=5-Speed HD Man. Trans.
				DDK=5-Speed HD Man. Trans.

Clutch, Input Shaft [DGV]
Figure 42RLE-420

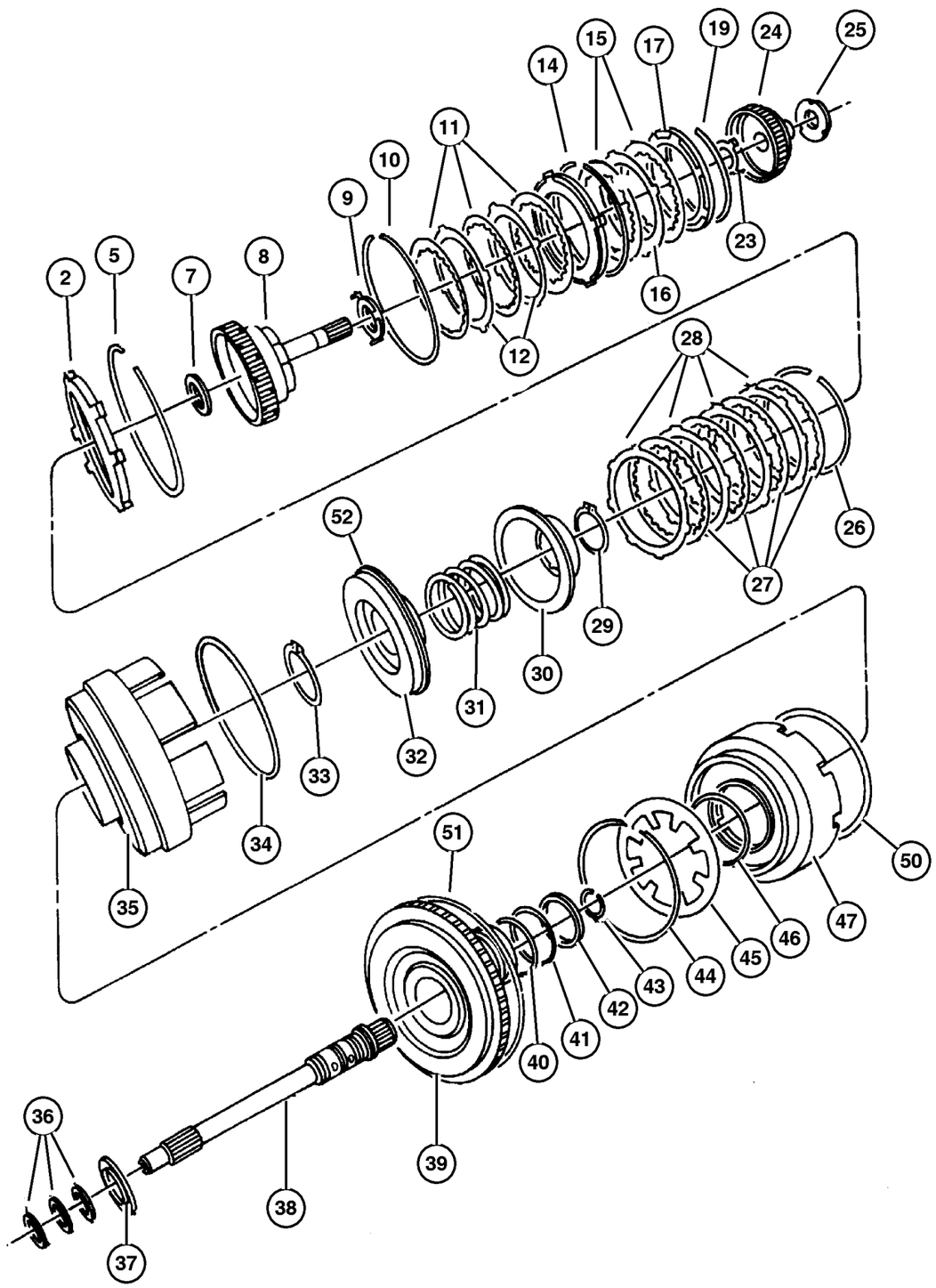

ITEM	PART NUMBER	QTY	LINE	SERIES	BODY	ENGINE	TRANS	TRIM	DESCRIPTION
	4659 993	1	T				DGV		
		1	J, U				DGV		
25									PLATE, Transmission O/Drive Clutch
	3836 237AB	AR	T				DGV		[1.70/1.77MM]
		AR	J, U				DGV		[1.70/1.77MM]
	3836 238AB	AR	T				DGV		[1.92/1.99MM]
	3836 239AB	AR	T				DGV		[2.14/2.21MM]
		AR	J, U				DGV		[2.14/2.21MM]
	3836 240AB	AR	T				DGV		[2.36/2.43MM]
		AR	J, U				DGV		[2.36/2.43MM]
	3836 241AB	AR	T				DGV		[2.58/2.65MM]
		AR	J, U				DGV		[2.58/2.65MM]
	4431 665AB	AR	J, U				DGV		[1.55/1.66MM]
		AR	T				DGV		[1.55/1.66MM]
	4431 666AB	AR	T				DGV		[1.81/1.88MM]
		AR	J, U				DGV		[1.81/1.88MM]
	4431 667AB	AR	T				DGV		[2.03/2.10MM]
		AR	J, U				DGV		[2.03/2.10MM]
	4431 668AB	AR	T				DGV		[2.25/2.32MM]
		AR	J, U				DGV		[2.25/2.32MM]
	4431 669AB	AR	T				DGV		[2.47/2.52MM]
		AR	J, U				DGV		[2.47/2.52MM]
	4446 670AB	AR	T				DGV		[2.69/2.76MM]
		AR	J, U				DGV		[2.69/2.76MM]
	4446 671AB	AR	T				DGV		[2.91/2.98MM]
		AR	J, U				DGV		[2.91/2.98MM]
	3836 238AB	AR	J, U				DGV		[1.92/1.99MM]
26									SNAP RING, Underdrive Clutch, Flat
	4659 980	1	T				DGV		
		1	J, U				DGV		
27									DISC, Clutch
	4531 678	4	T				DGV		
		4	J, U				DGV		
28									PLATE, Transmission O/Drive Clutch
	4659 053	4	T				DGV		
		4	J, U				DGV		
29									SNAP RING
	6501 715	1	T				DGV		
		1	J, U				DGV		
30									RETAINER AND SEAL, Transmission U/Drive Spring
	4431 612	1	T				DGV		

2006 Liberty (KJ)

SERIES	LINE	BODY	ENGINE	TRANSMISSION
H =HIGHLINE	T =JEEP - 2WD	74 =SPORT UTILITY 4-DR	EKG=3.7L V6 Eng.	DG6=4-Spd. Auto. 42RLE Trans.
M =MEDIUM	J =JEEP - 4WD		ENR=2.8L 4 Cyl Turbo Diesel Eng.	DGV=4-Spd. Auto. VLP Trans.
P =PREMIUM	U =JEEP - 4WD (RHD)		ENJ=2.5L 4 Cyl 16V Turbo Diesel Eng.	DGQ=5-Spd Auto. 5-45RFE Trans.
			ED1=2.4L 4 Cyl DOHC 16v SMPI Eng.	DEH=6-Speed Man. NSG370 Trans.
				DDD=5-Speed HD Man. Trans.
				DDK=5-Speed HD Man. Trans.

Clutch, Input Shaft [DGV]
Figure 42RLE-420

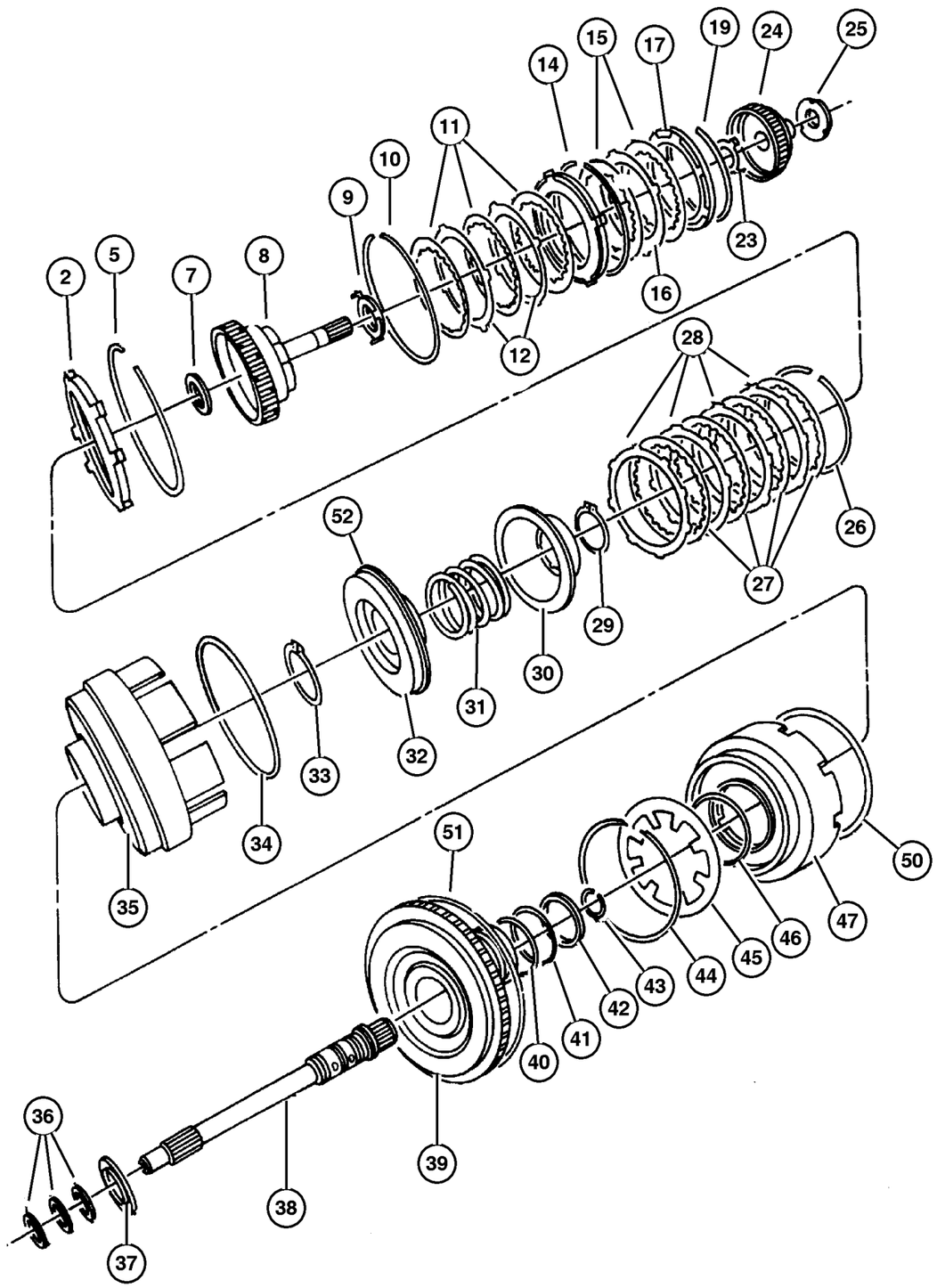

ITEM	PART NUMBER	QTY	LINE	SERIES	BODY	ENGINE	TRANS	TRIM	DESCRIPTION
		1	J, U				DGV		
31									SPRING, Drive Lower Case
	4377 177	1	T				DGV		
		1	J, U				DGV		
32									GASKET PACKAGE, Transmission
	5103 073AA	1	T				DGV		
		1	J, U				DGV		
33									SNAP RING
	6507 226AA	1	T				DGV		
		1	J, U				DGV		
34									SEAL, Piston Outer, 140mm OD
	4659 871	1	J, U				DGV		
		1	T				DGV		
35									RETAINER, Transmission Input Clutch
	4659 935	1	J, U				DGV		
		1	T				DGV		
36									SEAL, Input Shaft
	4446 543	3	J, U				DGV		
		3	T				DGV		
37									THRUST BEARING
	4412 209	1	J, U				DGV		
		1	T				DGV		
38									INPUT SHAFT PACKAGE, Transaxle
	4626 452AB	1	J, U				DGV		
		1	T				DGV		
39									HUB, Input Clutch, Serviced in Assembly, (NOT SERVICED) (Not Serviced)
40									O RING, Transmission Clutch
	6502 271	1	T				DGV		
		1	J, U				DGV		
41									O RING, Transmission Clutch
	6502 269	1	J, U				DGV		
		2	T				DGV		
42									SEAL, Under Drive
	4659 391AB	1	J, U				DGV		
		1	T				DGV		
43									SNAP RING
	6501 702	1	J, U				DGV		
		1	T				DGV		
44									SNAP RING

2006 Liberty (KJ)

SERIES	LINE	BODY	ENGINE	TRANSMISSION
H =HIGHLINE	T =JEEP - 2WD	74 =SPORT UTILITY 4-DR	EKG=3.7L V6 Eng.	DG6=4-Spd. Auto. 42RLE Trans.
M =MEDIUM	J =JEEP - 4WD		ENR=2.8L 4 Cyl Turbo Diesel Eng.	DGV=4-Spd. Auto. VLP Trans.
P =PREMIUM	U =JEEP - 4WD (RHD)		ENJ=2.5L 4 Cyl 16V Turbo Diesel Eng.	DGQ=5-Spd Auto. 5-45RFE Trans.
			ED1=2.4L 4 Cyl DOHC 16v SMPI Eng.	DEH=6-Speed Man. NSG370 Trans.
				DDD=5-Speed HD Man. Trans.
				DDK=5-Speed HD Man. Trans.

Clutch, Input Shaft [DGV]
Figure 42RLE-420

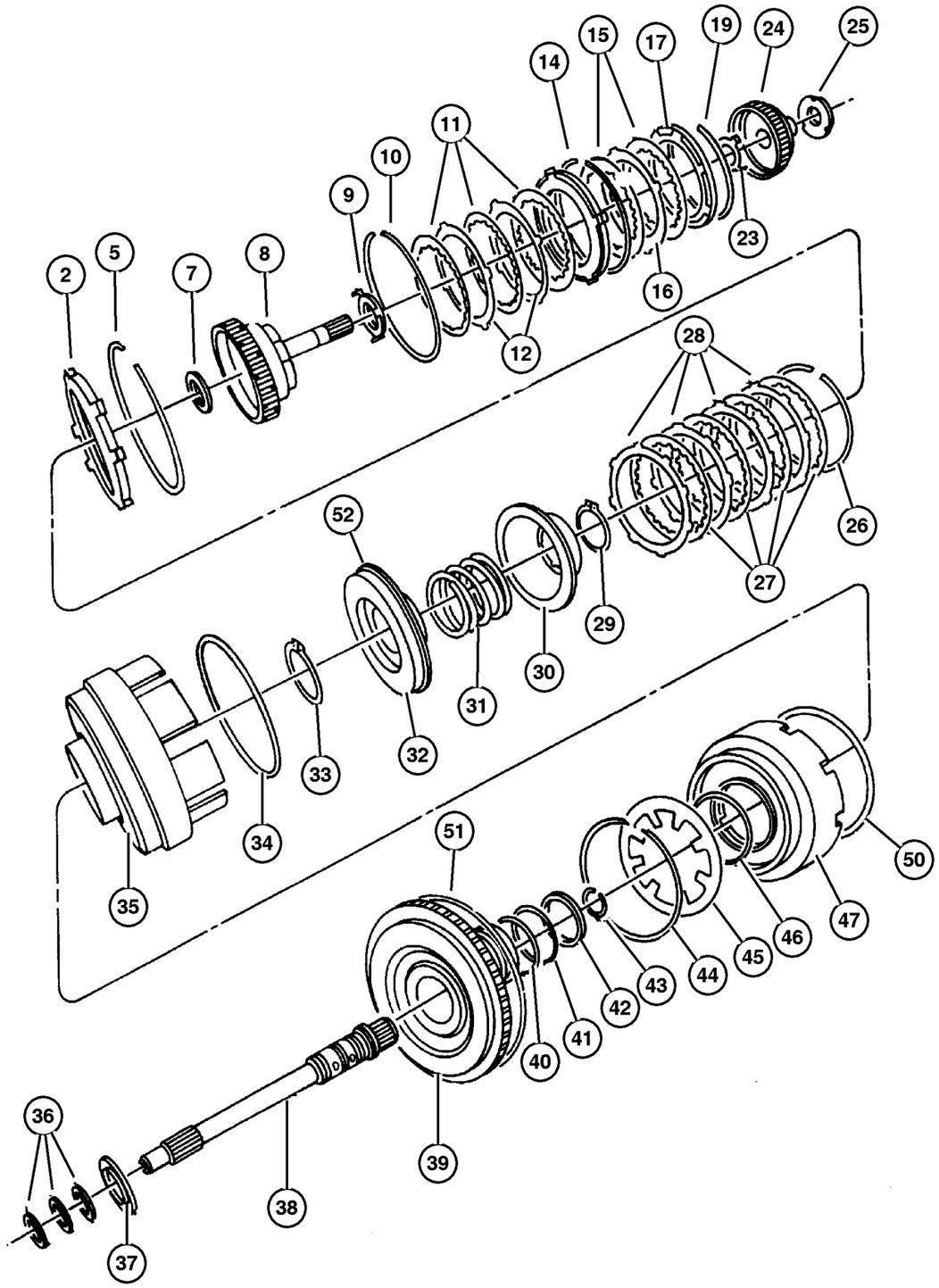

ITEM	PART NUMBER	QTY	LINE	SERIES	BODY	ENGINE	TRANS	TRIM	DESCRIPTION
	6501 702	1	T				DGV		
		1	J, U				DGV		
45									SPRING, Overdrive Piston
	4412 202	1	J, U				DGV		
		1	T				DGV		
46									O RING, Reverse & O/Drive Clutch Piston, Transmission
	6033 158	1	J, U				DGV		
		1	T				DGV		
47									HUB PACKAGE, Input Clutch
	5017 518AB	1	J, U				DGV		
		1	T				DGV		
-48									PISTON, Reverse and Overdrive, Serviced in Assembly, (NOT SERVICED) (Not Serviced)
-49									FILTER, Reverse And O/D Clutch
	4531 903	1	J, U				DGV		
		1	T				DGV		
50									SEAL, Reverse Servo Piston
	4659 056	1	T				DGV		
		1	J, U				DGV		
51									SEAL, Reverse Servo Piston
	4659 056	1	T				DGV		
		1	J, U				DGV		
52									PISTON, Underdrive
	4431 610	1	T				DGV		
		1	J, U				DGV		

2006 Liberty (KJ)

SERIES	LINE	BODY	ENGINE	TRANSMISSION
H =HIGHLINE	T =JEEP - 2WD	74 =SPORT UTILITY 4-DR	EKG=3.7L V6 Eng.	DG6=4-Spd. Auto. 42RLE Trans.
M =MEDIUM	J =JEEP - 4WD		ENR=2.8L 4 Cyl Turbo Diesel Eng.	DGV=4-Spd. Auto. VLP Trans.
P =PREMIUM	U =JEEP - 4WD (RHD)		ENJ=2.5L 4 Cyl 16V Turbo Diesel Eng.	DGQ=5-Spd Auto. 5-45RFE Trans.
			ED1=2.4L 4 Cyl DOHC 16v SMPI Eng.	DEH=6-Speed Man. NSG370 Trans.
				DDD=5-Speed HD Man. Trans.
				DDK=5-Speed HD Man. Trans.

AR = Use as required - = Non illustrated part # = New this model year

Gear Train [DG6]
Figure 42RLE-430

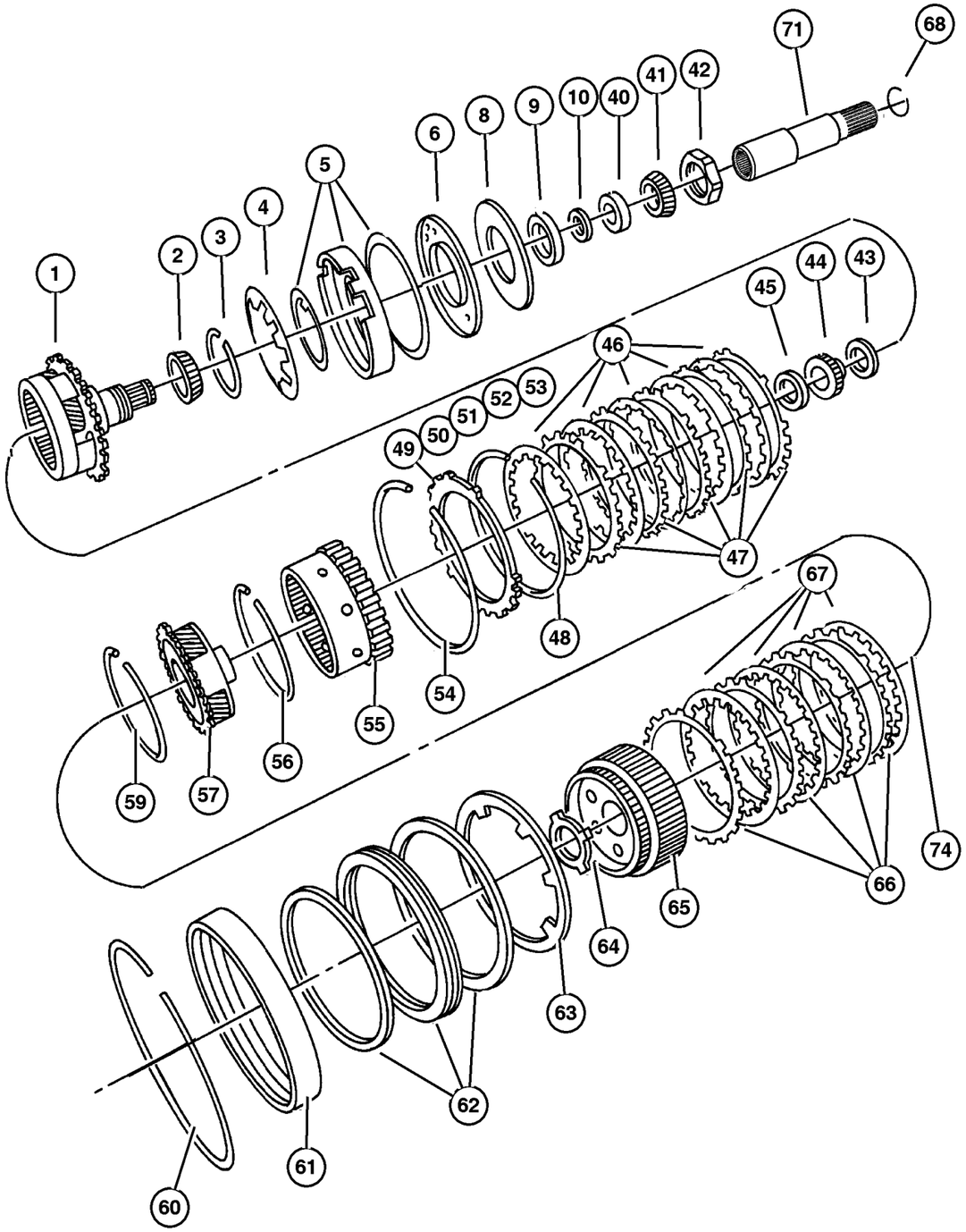

ITEM	PART NUMBER	QTY	LINE	SERIES	BODY	ENGINE	TRANS	TRIM	DESCRIPTION
NOTE:									
Sales Codes:									
[DG6]=4 Speed Automatic Transmission - [42RLE]									
1									CARRIER AND BEARING, Planet Pinion
	5101 874AA	1	J, U				DG6		
		1	T				DG6		
2									BEARING CONE, Output Shaft
	4412 235	1	J, U				DG6		
		1	T				DG6		
3									SNAP RING
	6501 853	1	J, U				DG6		
		1	T				DG6		
4									SPRING, Low/Reverse Clutch Piston
	4800 236AA	1	J, U				DG6		
		1	T				DG6		
5									PISTON, Low and Reverse Clutch
	4800 261AA	1	J, U				DG6		
		1	T				DG6		
6									RETAINER, Transmission Low and Reverse Clutch Pistion
	4800 255AA	1	J, U				DG6		
		1	T				DG6		
-7									SCREW AND WASHER, Pan Head, M5x0.8x11.00
	6501 819	3	T				DG6		
		3	J, U				DG6		
8									GASKET, Clutch Retainer
	4800 253AA	1	J, U				DG6		
		1	T				DG6		
9									BEARING CUP, Output Shaft
	4412 234	1	J, U				DG6		
		1	T				DG6		
10									SHIM, Carrier Bearing, 5.17 - 5.19mm
	5280 020	AR	J, U				DG6		
		AR	T				DG6		
-11									SHIM, Carrier Bearing, 5.20 - 5.22mm
	5280 021	AR	J, U				DG6		
		AR	T				DG6		
-12									SHIM, Carrier Bearing, 5.23 - 5.25mm

2006 Liberty (KJ)

SERIES	LINE	BODY	ENGINE	TRANSMISSION
H =HIGHLINE	T =JEEP - 2WD	74 =SPORT UTILITY 4-DR	EKG=3.7L V6 Eng.	DG6=4-Spd. Auto. 42RLE Trans.
M =MEDIUM	J =JEEP - 4WD		ENR=2.8L 4 Cyl Turbo Diesel Eng.	DGV=4-Spd. Auto. VLP Trans.
P =PREMIUM	U =JEEP - 4WD (RHD)		ENJ=2.5L 4 Cyl 16V Turbo Diesel Eng.	DGQ=5-Spd Auto. 5-45RFE Trans.
			ED1=2.4L 4 Cyl DOHC 16v SMPI Eng.	DEH=6-Speed Man. NSG370 Trans.
				DDD=5-Speed HD Man. Trans.
				DDK=5-Speed HD Man. Trans.

Gear Train [DG6]
Figure 42RLE-430

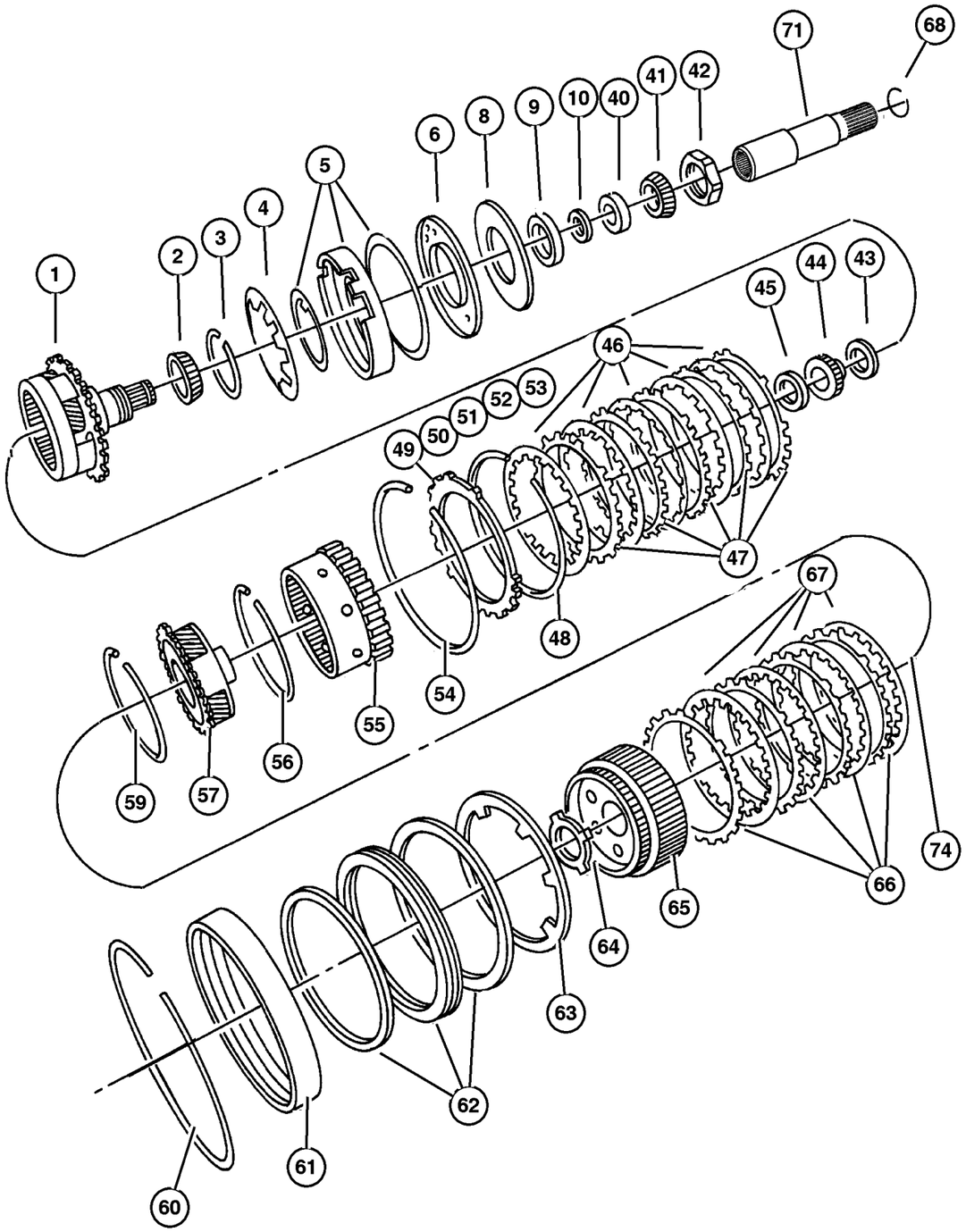

ITEM	PART NUMBER	QTY	LINE	SERIES	BODY	ENGINE	TRANS	TRIM	DESCRIPTION
	5280 022	AR	J, U				DG6		
		AR	T				DG6		
-13									SHIM, Carrier Bearing, 5.26 - 5. 28mm
	5280 023	AR	J, U				DG6		
		AR	T				DG6		
-14									SHIM, Carrier Bearing, 5.29 - 5. 31mm
	5280 024	AR	J, U				DG6		
		AR	T				DG6		
-15									SHIM, Carrier Bearing, 5.32 - 5. 34mm
	5280 025	AR	J, U				DG6		
		AR	T				DG6		
-16									SHIM, Carrier Bearing, 5.35 - 5. 37mm
	5280 026	AR	J, U				DG6		
		AR	T				DG6		
-17									SHIM, Carrier Bearing, 5.38 - 5. 40mm
	5280 027	AR	J, U				DG6		
		AR	T				DG6		
-18									SHIM, Carrier Bearing, 5.41 - 5. 43mm
	5280 028	AR	J, U				DG6		
		AR	T				DG6		
-19									SHIM, Carrier Bearing, 5.44 - 5. 46mm
	5280 029	AR	J, U				DG6		
		AR	T				DG6		
-20									SHIM, Carrier Bearing, 5.47 - 5. 49mm
	5280 030	AR	J, U				DG6		
		AR	T				DG6		
-21									SHIM, Carrier Bearing, 5.50 - 5. 52mm
	5280 031	AR	J, U				DG6		
		AR	T				DG6		
-22									SHIM, Carrier Bearing, 5.53 - 5. 55mm
	5280 032	AR	J, U				DG6		
		AR	T				DG6		

2006 Liberty (KJ)

SERIES	LINE	BODY	ENGINE	TRANSMISSION
H =HIGHLINE	T =JEEP - 2WD	74 =SPORT UTILITY 4-DR	EKG=3.7L V6 Eng.	DG6=4-Spd. Auto. 42RLE Trans.
M =MEDIUM	J =JEEP - 4WD		ENR=2.8L 4 Cyl Turbo Diesel Eng.	DGV=4-Spd. Auto. VLP Trans.
P =PREMIUM	U =JEEP - 4WD (RHD)		ENJ=2.5L 4 Cyl 16V Turbo Diesel Eng.	DGQ=5-Spd Auto. 5-45RFE Trans.
			ED1=2.4L 4 Cyl DOHC 16v SMPI Eng.	DEH=6-Speed Man. NSG370 Trans.
				DDD=5-Speed HD Man. Trans.
				DDK=5-Speed HD Man. Trans.

Gear Train [DG6]
Figure 42RLE-430

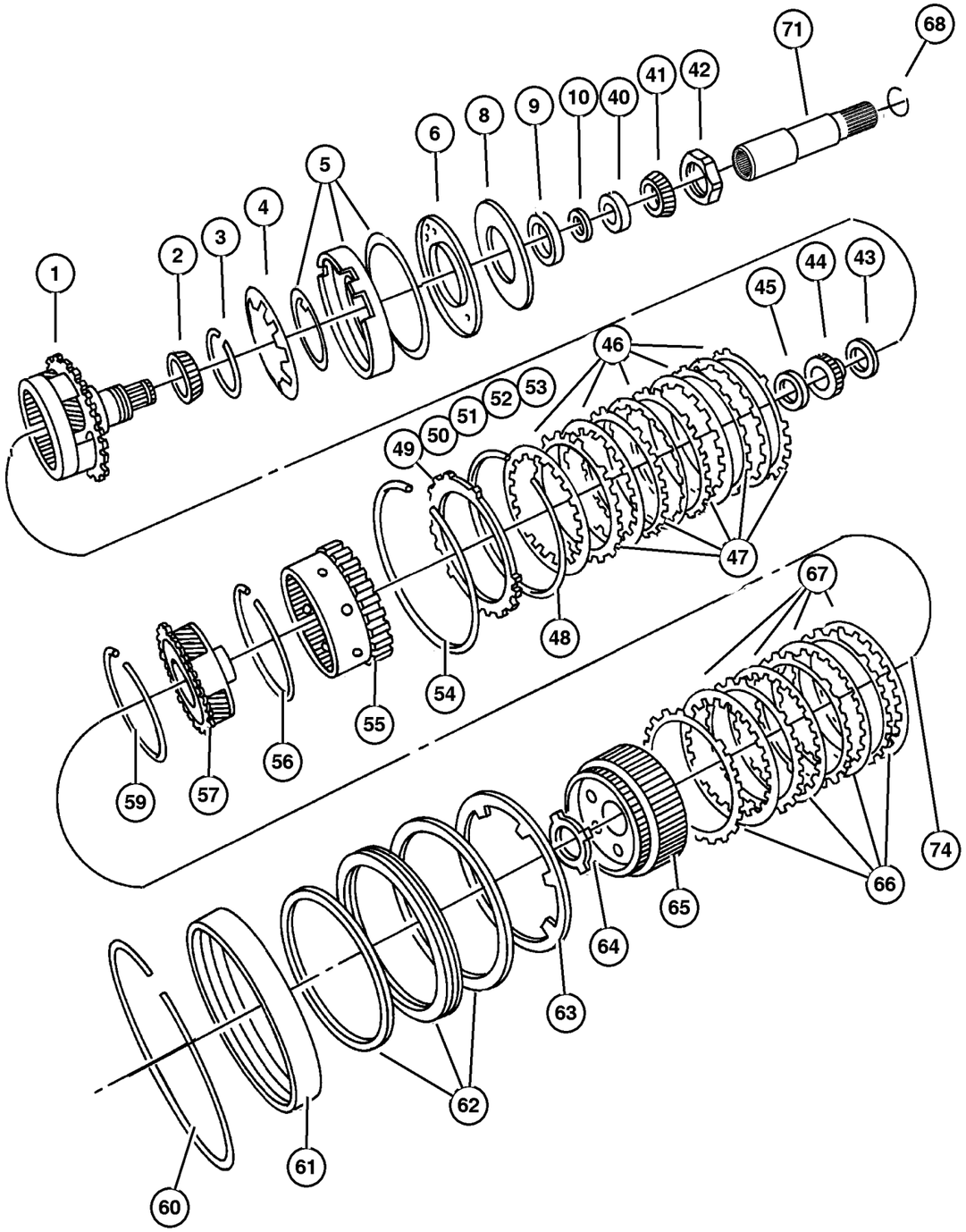

ITEM	PART NUMBER	QTY	LINE	SERIES	BODY	ENGINE	TRANS	TRIM	DESCRIPTION
-23									SHIM, Carrier Bearing, 5.56 - 5.
									58mm
	5280 033	AR	J, U				DG6		
		AR	T				DG6		
-24									SHIM, Carrier Bearing, 5.59 - 5.
									61mm
	5280 034	AR	J, U				DG6		
		AR	T				DG6		
-25									SHIM, Carrier Bearing, 5.62 - 5.
									64mm
	5280 035	AR	J, U				DG6		
		AR	T				DG6		
-26									SHIM, Carrier Bearing, 5.65 - 5.
									67mm
	5280 036	AR	J, U				DG6		
		AR	T				DG6		
-27									SHIM, Carrier Bearing, 5.68 - 5.
									70mm
	5280 037	AR	J, U				DG6		
		AR	T				DG6		
-28									SHIM, Carrier Bearing, 5.71 - 5.
									73mm
	5280 038	AR	J, U				DG6		
		AR	T				DG6		
-29									SHIM, Carrier Bearing, 5.74 - 5.
									76mm
	5280 039	AR	J, U				DG6		
		AR	T				DG6		
-30									SHIM, Carrier Bearing, 5.77 - 5.
									79mm
	5280 040	AR	J, U				DG6		
		AR	T				DG6		
-31									SHIM, Carrier Bearing, 5.80 - 5.
									82mm
	5280 041	AR	J, U				DG6		
		AR	T				DG6		
-32									SHIM, Carrier Bearing, 5.83 - 5.
									85mm
	5280 042	AR	J, U				DG6		
		AR	T				DG6		
-33									SHIM, Carrier Bearing, 5.86 - 5.
									88mm

2006 Liberty (KJ)

SERIES	LINE	BODY	ENGINE	TRANSMISSION
H =HIGHLINE	T =JEEP - 2WD	74 =SPORT UTILITY 4-DR	EKG=3.7L V6 Eng.	DG6=4-Spd. Auto. 42RLE Trans.
M =MEDIUM	J =JEEP - 4WD		ENR=2.8L 4 Cyl Turbo Diesel Eng.	DGV=4-Spd. Auto. VLP Trans.
P =PREMIUM	U =JEEP - 4WD (RHD)		ENJ=2.5L 4 Cyl 16V Turbo Diesel Eng.	DGQ=5-Spd Auto. 5-45RFE Trans.
			ED1=2.4L 4 Cyl DOHC 16v SMPI Eng.	DEH=6-Speed Man. NSG370 Trans.
				DDD=5-Speed HD Man. Trans.
				DDK=5-Speed HD Man. Trans.

Gear Train [DG6]
Figure 42RLE-430

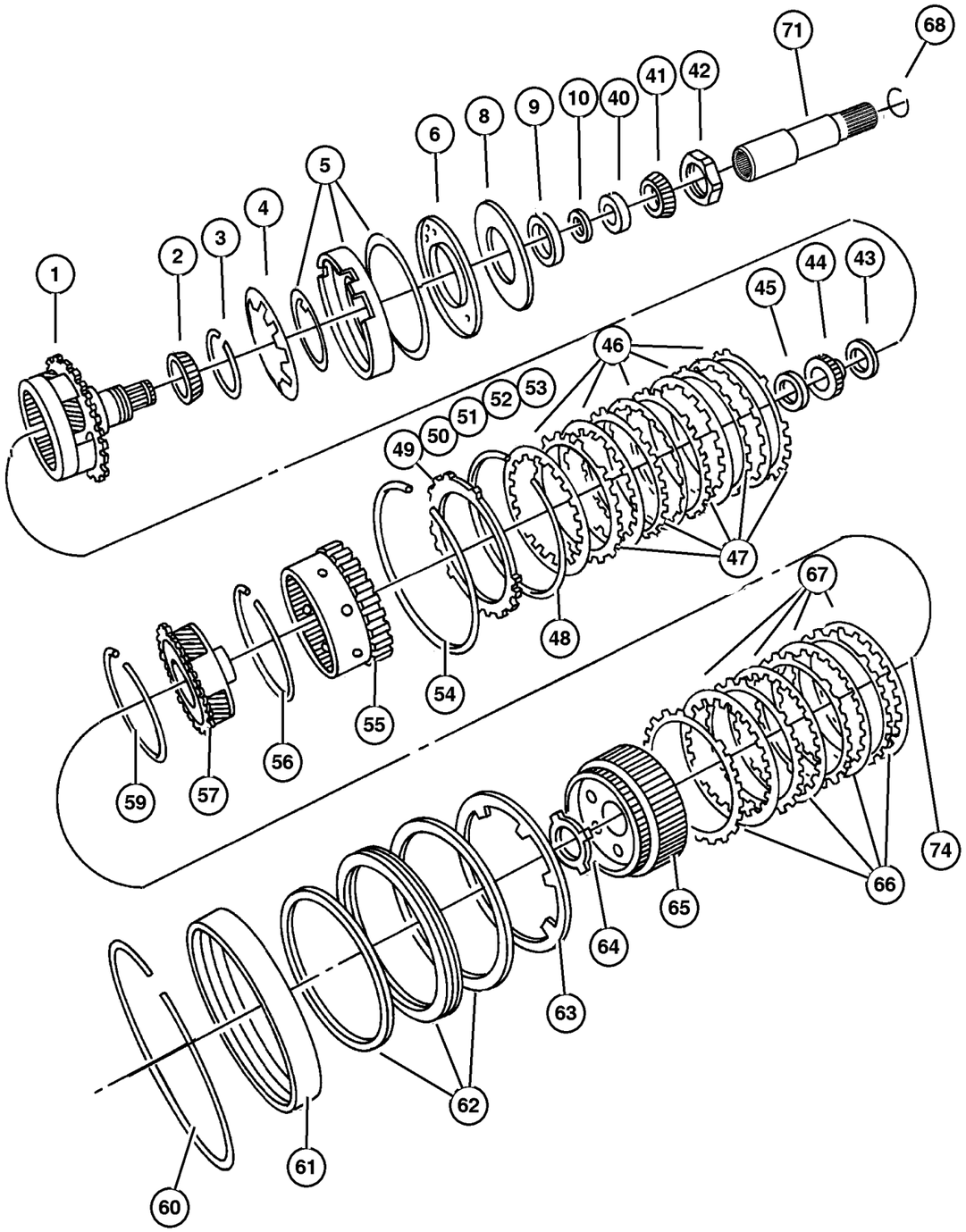

ITEM	PART NUMBER	QTY	LINE	SERIES	BODY	ENGINE	TRANS	TRIM	DESCRIPTION
	5280 043	AR	J, U				DG6		
		AR	T				DG6		
-34									SHIM, Carrier Bearing, 5.89 - 5. 91mm
	5280 044	AR	J, U				DG6		
		AR	T				DG6		
-35									SHIM, Carrier Bearing, 5.92 - 5. 94mm
	5280 045	AR	J, U				DG6		
		AR	T				DG6		
-36									SHIM, Carrier Bearing, 5.95 - 5. 97mm
	5280 046	AR	J, U				DG6		
		AR	T				DG6		
-37									SHIM, Carrier Bearing, 5.98 - 6. 00mm
	5280 047	AR	J, U				DG6		
		AR	T				DG6		
-38									SHIM, Carrier Bearing, 6.01 - 6. 03mm
	5280 048	AR	J, U				DG6		
		AR	T				DG6		
-39									SHIM, Carrier Bearing, 6.04 - 6. 06mm
	5280 049	AR	J, U				DG6		
		AR	T				DG6		
40									BEARING CUP, Differential
	4567 022	1	J, U				DG6		
		1	T				DG6		
41	4338 892	1	J, U						BEARING
42									NUT, Rear Carrier, M36 x 1.50
	6502 476	1	J, U				DG6		
		1	T				DG6		
43									THRUST BEARING
	4412 209	1	T				DG6		
		1	J, U				DG6		
44									GEAR, Sun
	4377 080	1	J, U				DG6		
		1	T				DG6		
45									THRUST BEARING, Rear Sun Gear, Front
	4412 229AB	1	J, U				DG6		

2006 Liberty (KJ)

SERIES	LINE	BODY	ENGINE	TRANSMISSION
H =HIGHLINE	T =JEEP - 2WD	74 =SPORT UTILITY 4-DR	EKG=3.7L V6 Eng.	DG6=4-Spd. Auto. 42RLE Trans.
M =MEDIUM	J =JEEP - 4WD		ENR=2.8L 4 Cyl Turbo Diesel Eng.	DGV=4-Spd. Auto. VLP Trans.
P =PREMIUM	U =JEEP - 4WD (RHD)		ENJ=2.5L 4 Cyl 16V Turbo Diesel Eng.	DGQ=5-Spd Auto. 5-45RFE Trans.
			ED1=2.4L 4 Cyl DOHC 16v SMPI Eng.	DEH=6-Speed Man. NSG370 Trans.
				DDD=5-Speed HD Man. Trans.
				DDK=5-Speed HD Man. Trans.

Gear Train [DG6]
Figure 42RLE-430

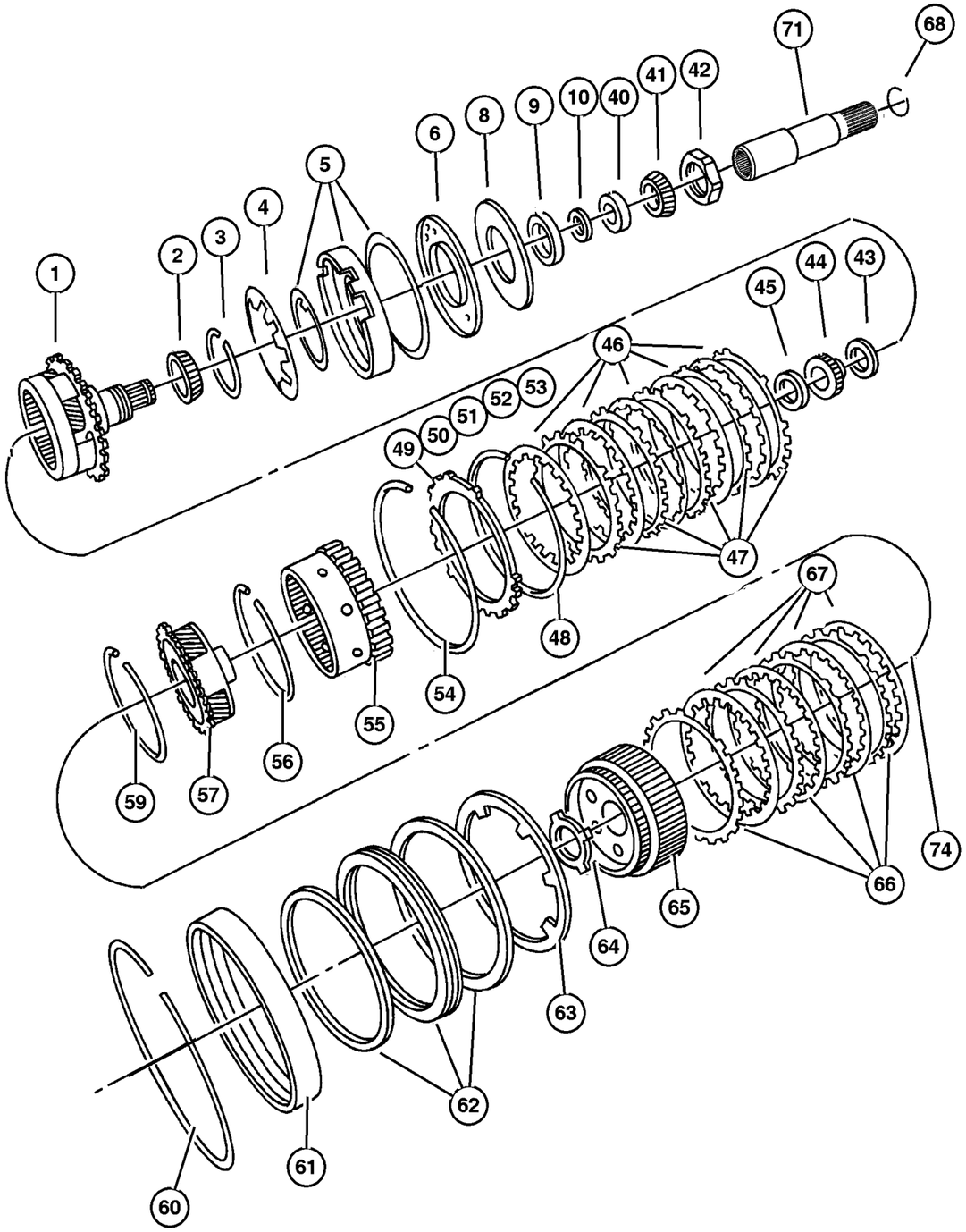

ITEM	PART NUMBER	QTY	LINE	SERIES	BODY	ENGINE	TRANS	TRIM	DESCRIPTION
		1	T				DG6		
46									DISC, Clutch
	4567 573AB	5	J, U				DG6		
		5	T				DG6		
47									PLATE, Transmission Clutch Reaction
	4659 055	5	J, U				DG6		
		5	T				DG6		
48									SNAP RING
	4412 395	1	J, U				DG6		
		1	T				DG6		
49									PLATE PACKAGE, Low/Reverse Clutch, 5.753/6.012
	4897 452AA	1	T				DG6		
		1	J, U				DG6		
50									PLATE PACKAGE, Low/Reverse Clutch, 6.013/6.272
	4897 453AA	1	T				DG6		
		1	J, U				DG6		
51									PLATE PACKAGE, Low/Reverse Clutch, 6.273/6.532
	4897 454AA	1	T				DG6		
		1	J, U				DG6		
52									PLATE PACKAGE, Low/Reverse Clutch, 6.533/6.792
	4897 455AA	1	T				DG6		
		1	J, U				DG6		
53									PLATE PACKAGE, Low/Reverse Clutch, 6.793/7.052
	4897 456AA	1	T				DG6		
		1	J, U				DG6		
54									SNAP RING
	4799 858AA	1	J, U				DG6		
		1	T				DG6		
55									GEAR, Annulus
	4799 794	1	T				DG6		
		1	J, U				DG6		
56									SNAP RING
	6035 238	2	T				DG6		
		2	J, U				DG6		
57									CARRIER, Planetary Pinion
	4567 539AB	1	J, U				DG6		

2006 Liberty (KJ)

SERIES	LINE	BODY	ENGINE	TRANSMISSION
H =HIGHLINE	T =JEEP - 2WD	74 =SPORT UTILITY 4-DR	EKG=3.7L V6 Eng.	DG6=4-Spd. Auto. 42RLE Trans.
M =MEDIUM	J =JEEP - 4WD		ENR=2.8L 4 Cyl Turbo Diesel Eng.	DGV=4-Spd. Auto. VLP Trans.
P =PREMIUM	U =JEEP - 4WD (RHD)		ENJ=2.5L 4 Cyl 16V Turbo Diesel Eng.	DGQ=5-Spd Auto. 5-45RFE Trans.
			ED1=2.4L 4 Cyl DOHC 16v SMPI Eng.	DEH=6-Speed Man. NSG370 Trans.
				DDD=5-Speed HD Man. Trans.
				DDK=5-Speed HD Man. Trans.

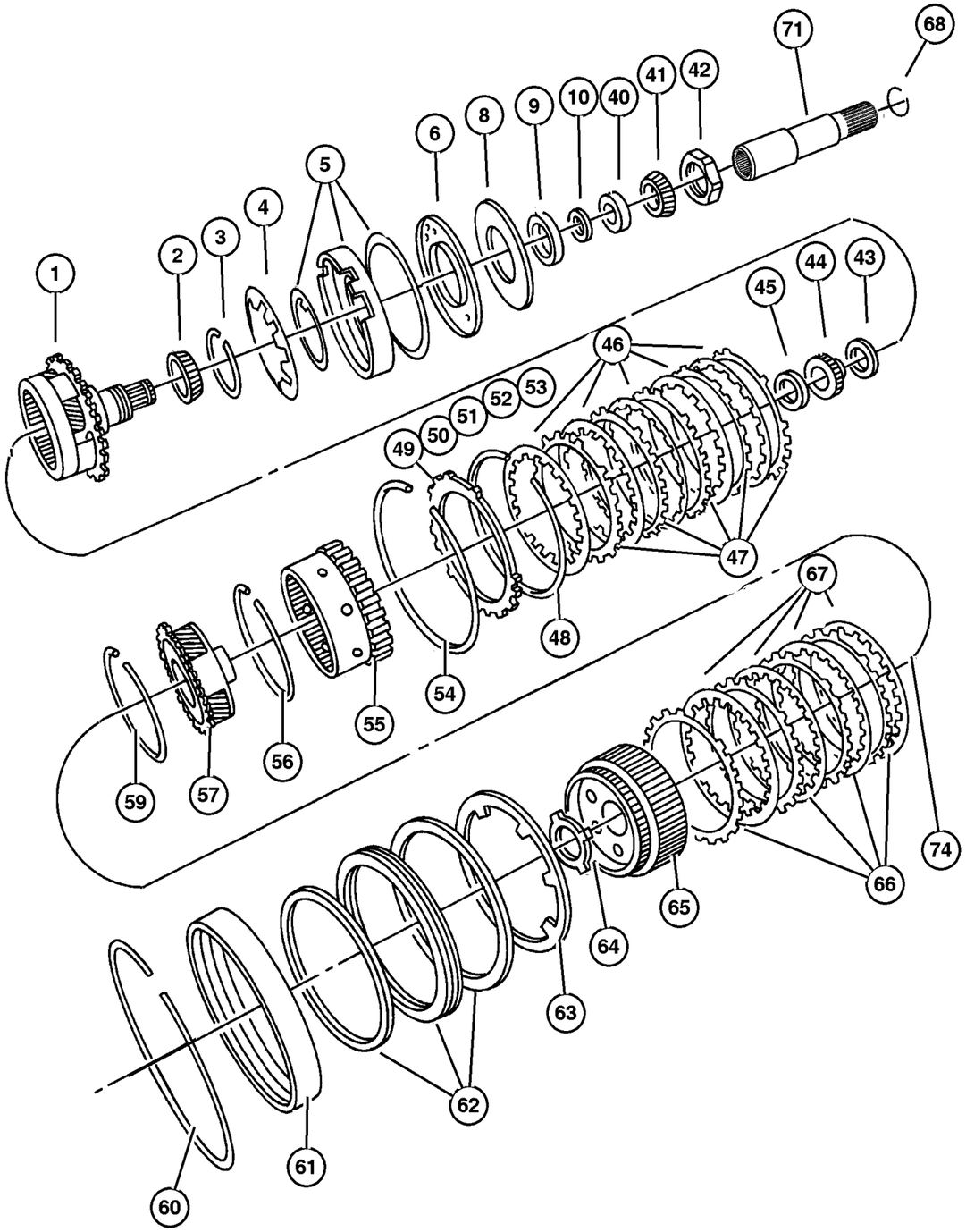

ITEM	PART NUMBER	QTY	LINE	SERIES	BODY	ENGINE	TRANS	TRIM	DESCRIPTION
		1	T				DG6		
-58									THRUST BEARING
	4412 209	1	T				DG6		
		1	J, U				DG6		
59									SNAP RING
	6035 238	2	T				DG6		
		2	J, U				DG6		
60									SNAP RING
	4505 591	1	J, U				DG6		
		1	T				DG6		
61									RETAINER PACKAGE, 2nd & 4th Clutch Piston
	5102 880AA	1	T				DG6		
		1	J, U				DG6		
62									RETAINER PACKAGE, 2nd & 4th Clutch Piston
	5102 880AA	1	T				DG6		
		1	J, U				DG6		
63									SPRING, 2nd And 4th Clutch Piston
	4412 248	1	J, U				DG6		
		1	T				DG6		
64									THRUST WASHER, Second and Fourth Clutch
	4412 216AB	1	J, U				DG6		
		1	T				DG6		
65									HUB AND GEAR, Second And Fourth Clutch
	4659 618AB	1	J, U				DG6		
		1	T				DG6		
66									PLATE, Transmission Clutch Reaction
	4659 054	4	J, U				DG6		
		4	T				DG6		
67									DISC, Clutch
	4799 860AB	4	J, U				DG6		
		4	T				DG6		
68	52852 916AA	1	J, U				DG6		CLIP
-69									THRUST WASHER, Planet Pinion
	3681 949	10	T				DG6		
		10	J, U				DG6		
-70									ROLLER, Front and Rear Pinion
	3743 664	95	J, U				DG6		

2006 Liberty (KJ)

SERIES	LINE	BODY	ENGINE	TRANSMISSION
H =HIGHLINE	T =JEEP - 2WD	74 =SPORT UTILITY 4-DR	EKG=3.7L V6 Eng.	DG6=4-Spd. Auto. 42RLE Trans.
M =MEDIUM	J =JEEP - 4WD		ENR=2.8L 4 Cyl Turbo Diesel Eng.	DGV=4-Spd. Auto. VLP Trans.
P =PREMIUM	U =JEEP - 4WD (RHD)		ENJ=2.5L 4 Cyl 16V Turbo Diesel Eng.	DGQ=5-Spd Auto. 5-45RFE Trans.
			ED1=2.4L 4 Cyl DOHC 16v SMPI Eng.	DEH=6-Speed Man. NSG370 Trans.
				DDD=5-Speed HD Man. Trans.
				DDK=5-Speed HD Man. Trans.

Gear Train [DG6]
Figure 42RLE-430

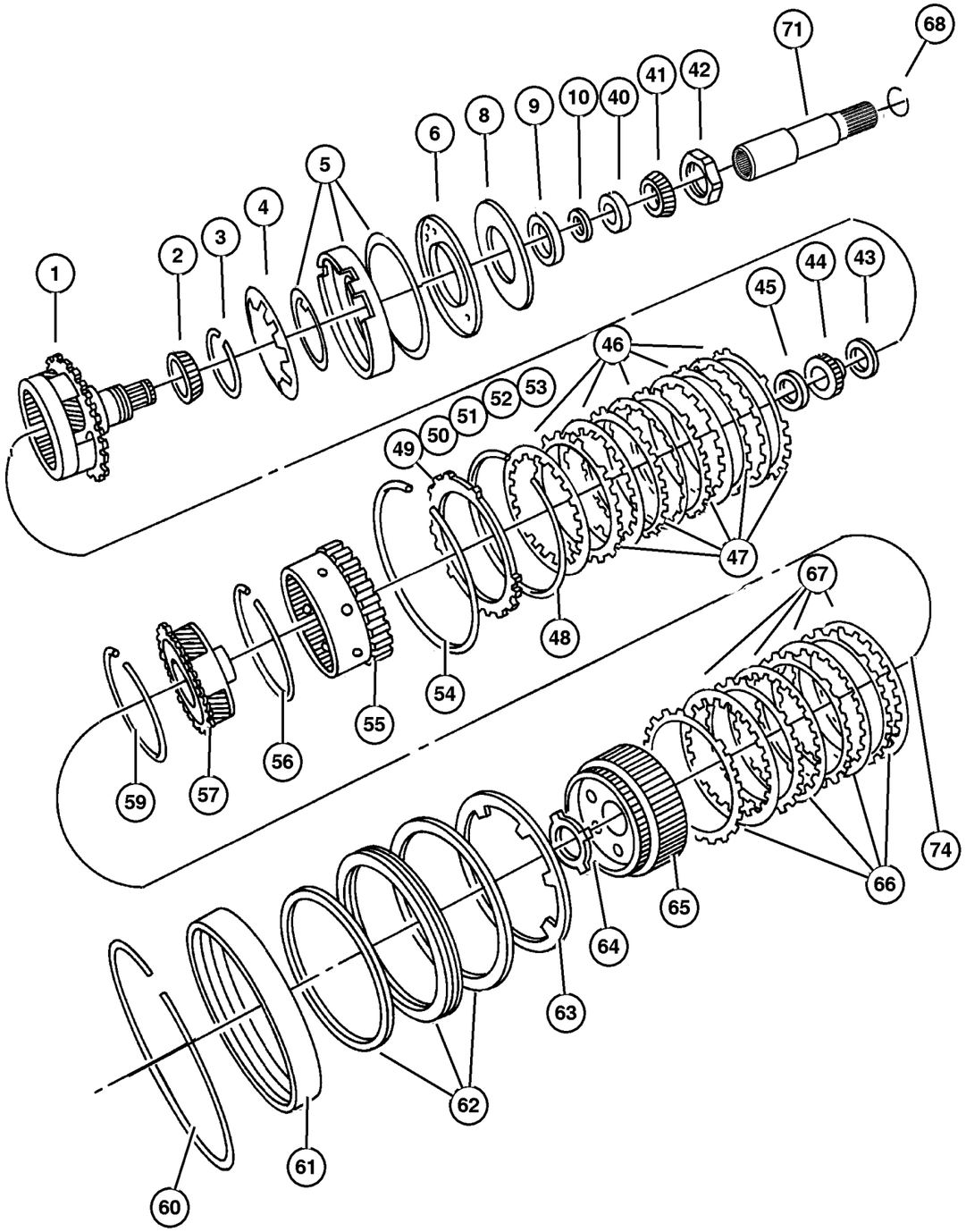

ITEM	PART NUMBER	QTY	LINE	SERIES	BODY	ENGINE	TRANS	TRIM	DESCRIPTION
		57	T				DG6		
71	52852 915AA	1	J, U				DG6		SHAFT, Intermediate
-72	52852 916AA-	1	J, U				DG6		CLIP
-73	52854 168AA-	1	T				DG6		SHAFT, Output
74	2466 224	1	T				DG6		BEARING, Output Shaft

2006 Liberty (KJ)

SERIES	LINE	BODY	ENGINE	TRANSMISSION
H =HIGHLINE	T =JEEP - 2WD	74 =SPORT UTILITY 4-DR	EKG=3.7L V6 Eng.	DG6=4-Spd. Auto. 42RLE Trans.
M =MEDIUM	J =JEEP - 4WD		ENR=2.8L 4 Cyl Turbo Diesel Eng.	DGV=4-Spd. Auto. VLP Trans.
P =PREMIUM	U =JEEP - 4WD (RHD)		ENJ=2.5L 4 Cyl 16V Turbo Diesel Eng.	DGQ=5-Spd Auto. 5-45RFE Trans.
			ED1=2.4L 4 Cyl DOHC 16v SMPI Eng.	DEH=6-Speed Man. NSG370 Trans.
				DDD=5-Speed HD Man. Trans.
				DDK=5-Speed HD Man. Trans.

Gear Train [DGV]
Figure 42RLE-440

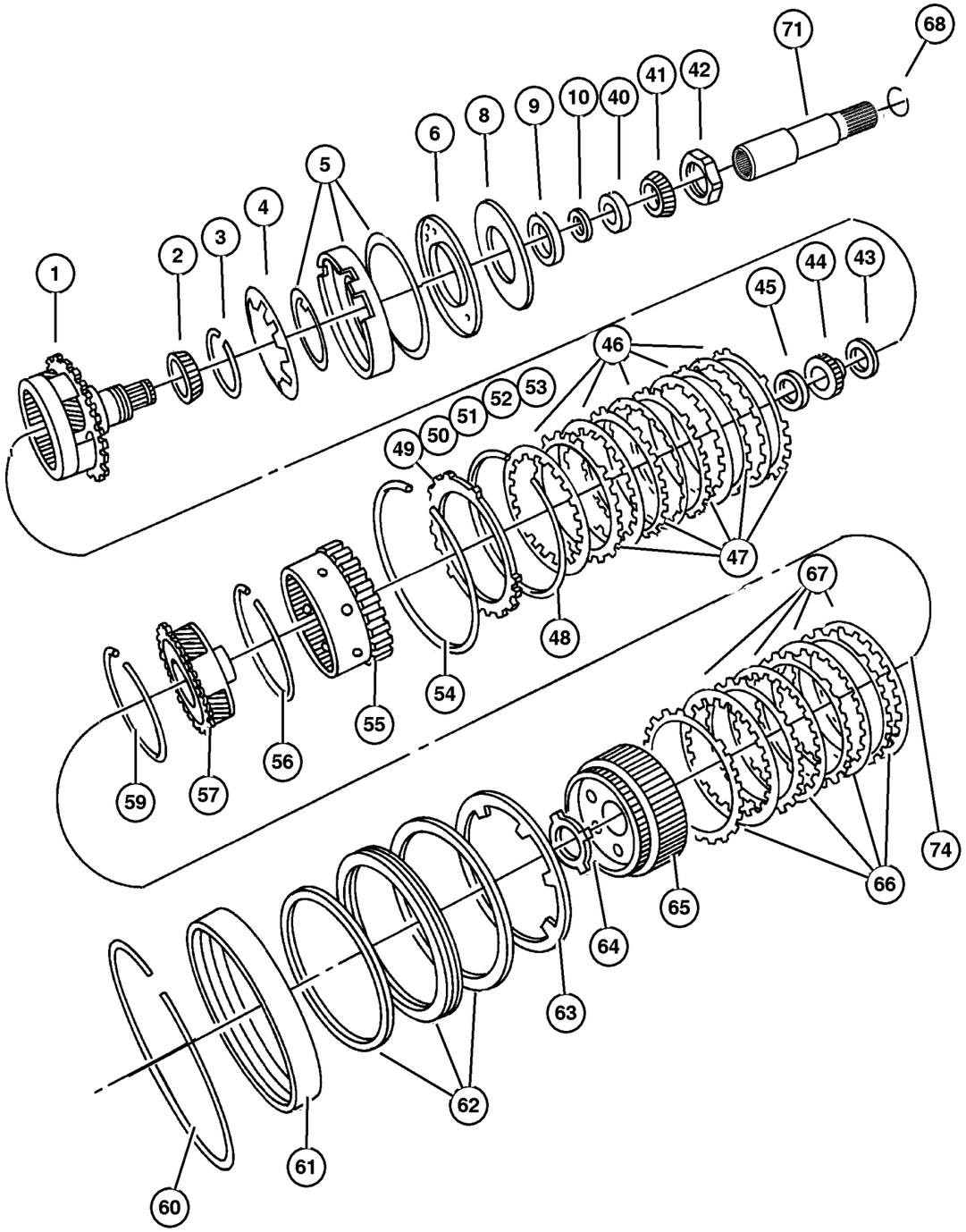

ITEM	PART NUMBER	QTY	LINE	SERIES	BODY	ENGINE	TRANS	TRIM	DESCRIPTION
NOTE:									
Sales Codes:									
[DGV]=4 Speed Automatic Transmission - [42RLE / VLP]									
1									CARRIER AND BEARING, Planet Pinion
	5101 874AA	1	J, U				DGV		
		1	T				DGV		
2									BEARING CONE, Output Shaft
	4412 235AB	1	J, U				DGV		
		1	T				DGV		
3									SNAP RING
	6501 853	1	J, U				DGV		
		1	T				DGV		
4									SPRING, Low/Reverse Clutch Piston
	4800 236AA	1	J, U				DGV		
		1	T				DGV		
5									PISTON, Low and Reverse Clutch
	4800 261AA	1	J, U				DGV		
		1	T				DGV		
6									RETAINER, Transmission Low and Reverse Clutch Pistion
	4800 255AA	1	J, U				DGV		
		1	T				DGV		
-7									SCREW AND WASHER, Pan Head, M5x0.8x11.00
	6501 819	3	J, U				DGV		
		3	T				DGV		
8									GASKET, Clutch Retainer
	4800 253AA	1	J, U				DGV		
		1	T				DGV		
9									BEARING CUP, Output Shaft
	4412 234	1	J, U				DGV		
		1	T				DGV		
10									SHIM, Carrier Bearing, 5.17 - 5.19mm
	5280 020	AR	J, U				DGV		
		AR	T				DGV		
-11									SHIM, Carrier Bearing, 5.20 - 5.22mm
	5280 021	AR	J, U				DGV		
		AR	T				DGV		
-12									SHIM, Carrier Bearing, 5.23 - 5.25mm

2006 Liberty (KJ)

SERIES	LINE	BODY	ENGINE	TRANSMISSION
H =HIGHLINE	T =JEEP - 2WD	74 =SPORT UTILITY 4-DR	EKG=3.7L V6 Eng.	DG6=4-Spd. Auto. 42RLE Trans.
M =MEDIUM	J =JEEP - 4WD		ENR=2.8L 4 Cyl Turbo Diesel Eng.	DGV=4-Spd. Auto. VLP Trans.
P =PREMIUM	U =JEEP - 4WD (RHD)		ENJ=2.5L 4 Cyl 16V Turbo Diesel Eng.	DGQ=5-Spd Auto. 5-45RFE Trans.
			ED1=2.4L 4 Cyl DOHC 16v SMPI Eng.	DEH=6-Speed Man. NSG370 Trans.
				DDD=5-Speed HD Man. Trans.
				DDK=5-Speed HD Man. Trans.

Gear Train [DGV]
Figure 42RLE-440

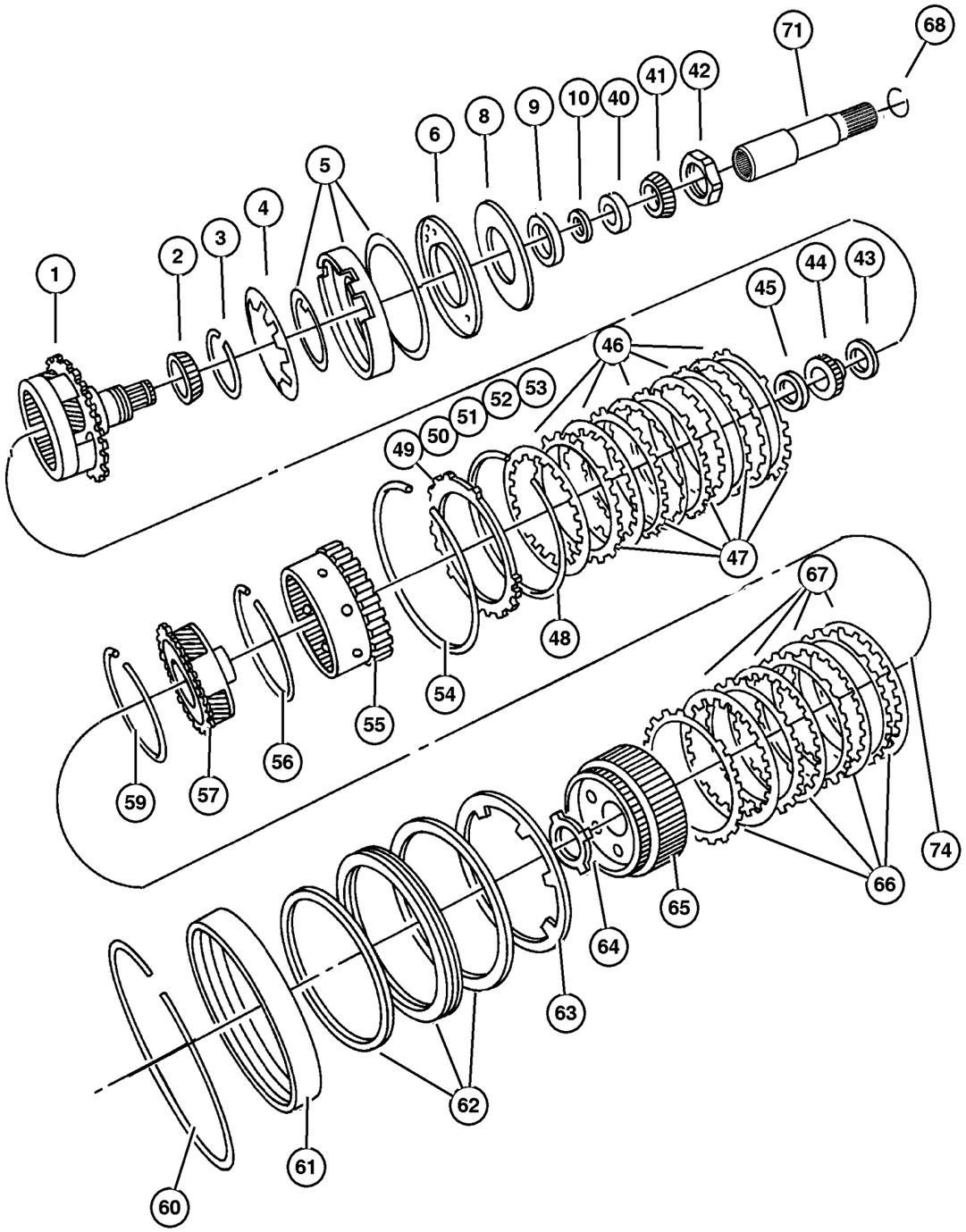

ITEM	PART NUMBER	QTY	LINE	SERIES	BODY	ENGINE	TRANS	TRIM	DESCRIPTION
	5280 022	AR	J, U				DGV		
		AR	T				DGV		
-13									SHIM, Carrier Bearing, 5.26 - 5. 28mm
	5280 023	AR	J, U				DGV		
		AR	T				DGV		
-14									SHIM, Carrier Bearing, 5.29 - 5. 31mm
	5280 024	AR	J, U				DGV		
		AR	T				DGV		
-15									SHIM, Carrier Bearing, 5.32 - 5. 34mm
	5280 025	AR	J, U				DGV		
		AR	T				DGV		
-16									SHIM, Carrier Bearing, 5.35 - 5. 37mm
	5280 026	AR	J, U				DGV		
		AR	T				DGV		
-17									SHIM, Carrier Bearing, 5.38 - 5. 40mm
	5280 027	AR	J, U				DGV		
		AR	T				DGV		
-18									SHIM, Carrier Bearing, 5.41 - 5. 43mm
	5280 028	AR	J, U				DGV		
		AR	T				DGV		
-19									SHIM, Carrier Bearing, 5.44 - 5. 46mm
	5280 029	AR	J, U				DGV		
		AR	T				DGV		
-20									SHIM, Carrier Bearing, 5.47 - 5. 49mm
	5280 030	AR	J, U				DGV		
		AR	T				DGV		
-21									SHIM, Carrier Bearing, 5.50 - 5. 52mm
	5280 031	AR	J, U				DGV		
		AR	T				DGV		
-22									SHIM, Carrier Bearing, 5.53 - 5. 55mm
	5280 032	AR	J, U				DGV		
		AR	T				DGV		

2006 Liberty (KJ)

SERIES	LINE	BODY	ENGINE	TRANSMISSION
H =HIGHLINE	T =JEEP - 2WD	74 =SPORT UTILITY 4-DR	EKG=3.7L V6 Eng.	DG6=4-Spd. Auto. 42RLE Trans.
M =MEDIUM	J =JEEP - 4WD		ENR=2.8L 4 Cyl Turbo Diesel Eng.	DGV=4-Spd. Auto. VLP Trans.
P =PREMIUM	U =JEEP - 4WD (RHD)		ENJ=2.5L 4 Cyl 16V Turbo Diesel Eng.	DGQ=5-Spd Auto. 5-45RFE Trans.
			ED1=2.4L 4 Cyl DOHC 16v SMPI Eng.	DEH=6-Speed Man. NSG370 Trans.
				DDD=5-Speed HD Man. Trans.
				DDK=5-Speed HD Man. Trans.

Gear Train [DGV]
Figure 42RLE-440

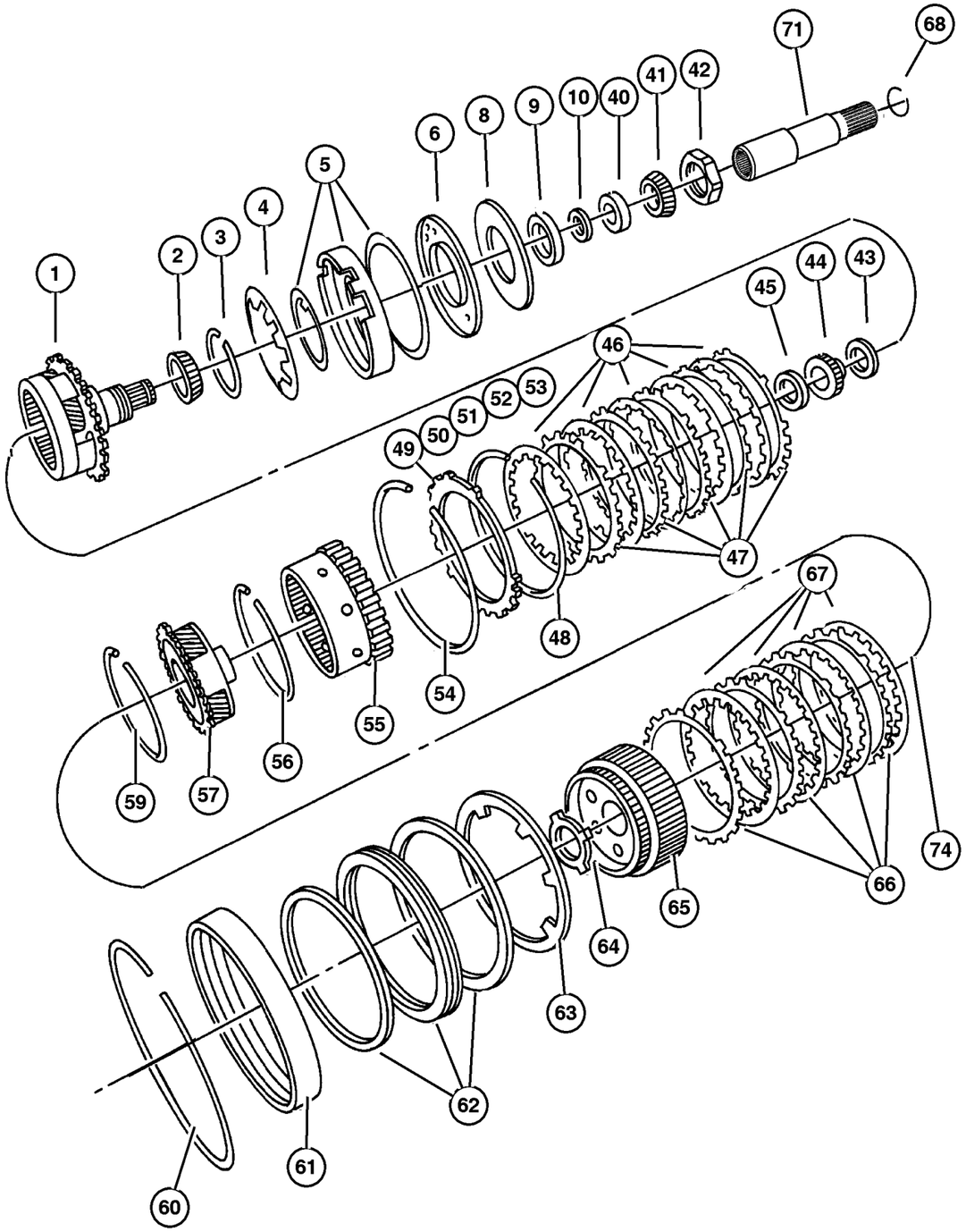

ITEM	PART NUMBER	QTY	LINE	SERIES	BODY	ENGINE	TRANS	TRIM	DESCRIPTION
-23									SHIM, Carrier Bearing, 5.56 - 5.
									58mm
	5280 033	AR	J, U				DGV		
		AR	T				DGV		
-24									SHIM, Carrier Bearing, 5.59 - 5.
									61mm
	5280 034	AR	J, U				DGV		
		AR	T				DGV		
-25									SHIM, Carrier Bearing, 5.62 - 5.
									64mm
	5280 035	AR	J, U				DGV		
		AR	T				DGV		
-26									SHIM, Carrier Bearing, 5.65 - 5.
									67mm
	5280 036	AR	J, U				DGV		
		AR	T				DGV		
-27									SHIM, Carrier Bearing, 5.68 - 5.
									70mm
	5280 037	AR	J, U				DGV		
		AR	T				DGV		
-28									SHIM, Carrier Bearing, 5.71 - 5.
									73mm
	5280 038	AR	J, U				DGV		
		AR	T				DGV		
-29									SHIM, Carrier Bearing, 5.74 - 5.
									76mm
	5280 039	AR	J, U				DGV		
		AR	T				DGV		
-30									SHIM, Carrier Bearing, 5.77 - 5.
									79mm
	5280 040	AR	J, U				DGV		
		AR	T				DGV		
-31									SHIM, Carrier Bearing, 5.80 - 5.
									82mm
	5280 041	AR	J, U				DGV		
		AR	T				DGV		
-32									SHIM, Carrier Bearing, 5.83 - 5.
									85mm
	5280 042	AR	J, U				DGV		
		AR	T				DGV		
-33									SHIM, Carrier Bearing, 5.86 - 5.
									88mm

2006 Liberty (KJ)

SERIES	LINE	BODY	ENGINE	TRANSMISSION
H =HIGHLINE	T =JEEP - 2WD	74 =SPORT UTILITY 4-DR	EKG=3.7L V6 Eng.	DG6=4-Spd. Auto. 42RLE Trans.
M =MEDIUM	J =JEEP - 4WD		ENR=2.8L 4 Cyl Turbo Diesel Eng.	DGV=4-Spd. Auto. VLP Trans.
P =PREMIUM	U =JEEP - 4WD (RHD)		ENJ=2.5L 4 Cyl 16V Turbo Diesel Eng.	DGQ=5-Spd Auto. 5-45RFE Trans.
			ED1=2.4L 4 Cyl DOHC 16v SMPI Eng.	DEH=6-Speed Man. NSG370 Trans.
				DDD=5-Speed HD Man. Trans.
				DDK=5-Speed HD Man. Trans.

Gear Train [DGV]
Figure 42RLE-440

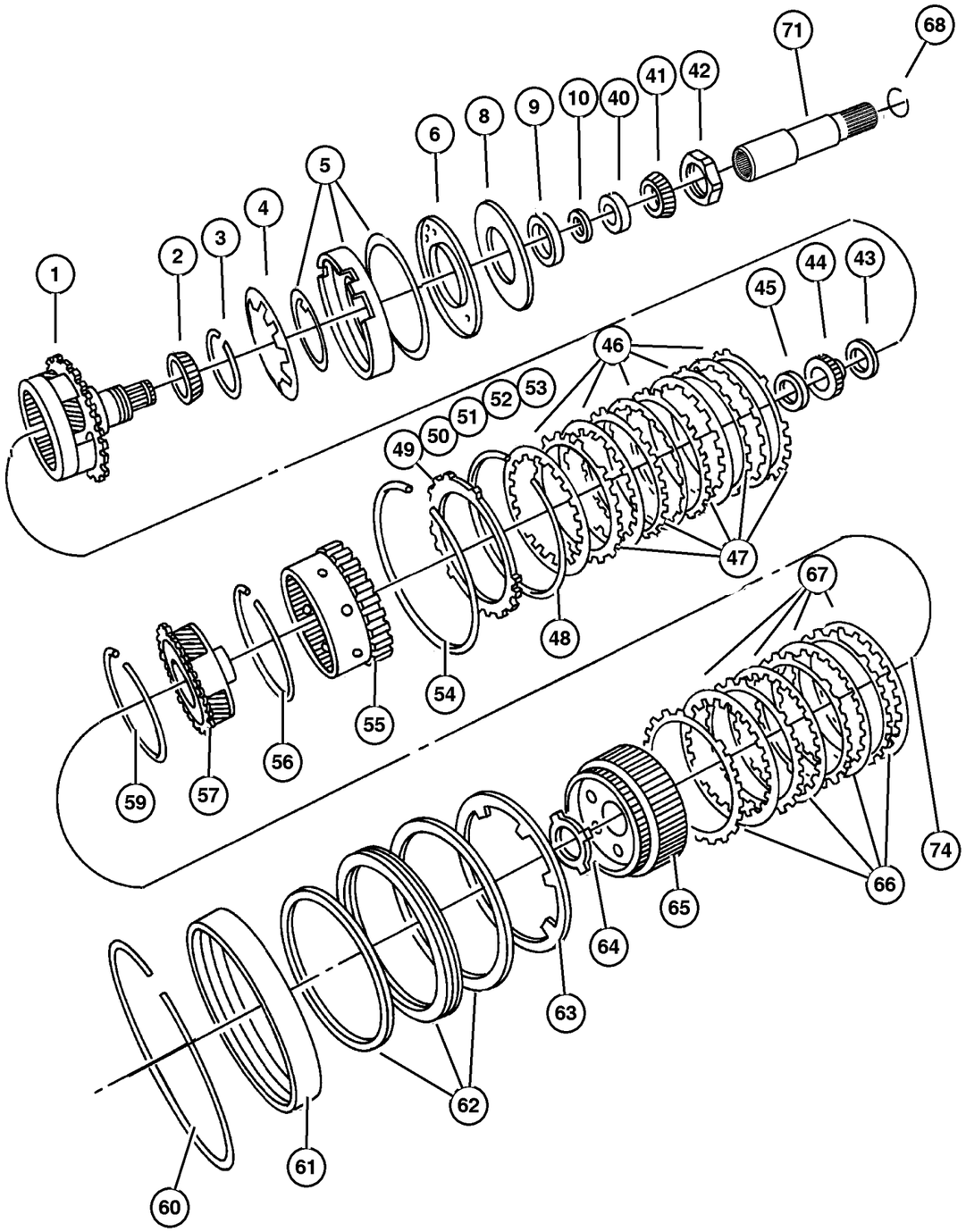

ITEM	PART NUMBER	QTY	LINE	SERIES	BODY	ENGINE	TRANS	TRIM	DESCRIPTION
	5280 043	AR	J, U				DGV		
		AR	T				DGV		
-34									SHIM, Carrier Bearing, 5.89 - 5. 91mm
	5280 044	AR	J, U				DGV		
		AR	T				DGV		
-35									SHIM, Carrier Bearing, 5.92 - 5. 94mm
	5280 045	AR	J, U				DGV		
		AR	T				DGV		
-36									SHIM, Carrier Bearing, 5.95 - 5. 97mm
	5280 046	AR	J, U				DGV		
		AR	T				DGV		
-37									SHIM, Carrier Bearing, 5.98 - 6. 00mm
	5280 047	AR	J, U				DGV		
		AR	T				DGV		
-38									SHIM, Carrier Bearing, 6.01 - 6. 03mm
	5280 048	AR	J, U				DGV		
		AR	T				DGV		
-39									SHIM, Carrier Bearing, 6.04 - 6. 06mm
	5280 049	AR	J, U				DGV		
		AR	T				DGV		
40									BEARING CUP, Differential
	4567 022	1	J, U				DGV		
		1	T				DGV		
41	4338 892	1	J, U						BEARING
42									NUT, Rear Carrier, M36 x 1.50
	6502 476	1	J, U				DGV		
		1	T				DGV		
43									THRUST BEARING
	4412 209	1	J, U				DGV		
		1	T				DGV		
44									GEAR, Sun
	4377 080	1	J, U				DGV		
		1	T				DGV		
45									THRUST BEARING, Rear Sun Gear, Front
	4412 229AB	1	J, U				DGV		

2006 Liberty (KJ)

SERIES	LINE	BODY	ENGINE	TRANSMISSION
H =HIGHLINE	T =JEEP - 2WD	74 =SPORT UTILITY 4-DR	EKG=3.7L V6 Eng.	DG6=4-Spd. Auto. 42RLE Trans.
M =MEDIUM	J =JEEP - 4WD		ENR=2.8L 4 Cyl Turbo Diesel Eng.	DGV=4-Spd. Auto. VLP Trans.
P =PREMIUM	U =JEEP - 4WD (RHD)		ENJ=2.5L 4 Cyl 16V Turbo Diesel Eng.	DGQ=5-Spd Auto. 5-45RFE Trans.
			ED1=2.4L 4 Cyl DOHC 16v SMPI Eng.	DEH=6-Speed Man. NSG370 Trans.
				DDD=5-Speed HD Man. Trans.
				DDK=5-Speed HD Man. Trans.

Gear Train [DGV]
Figure 42RLE-440

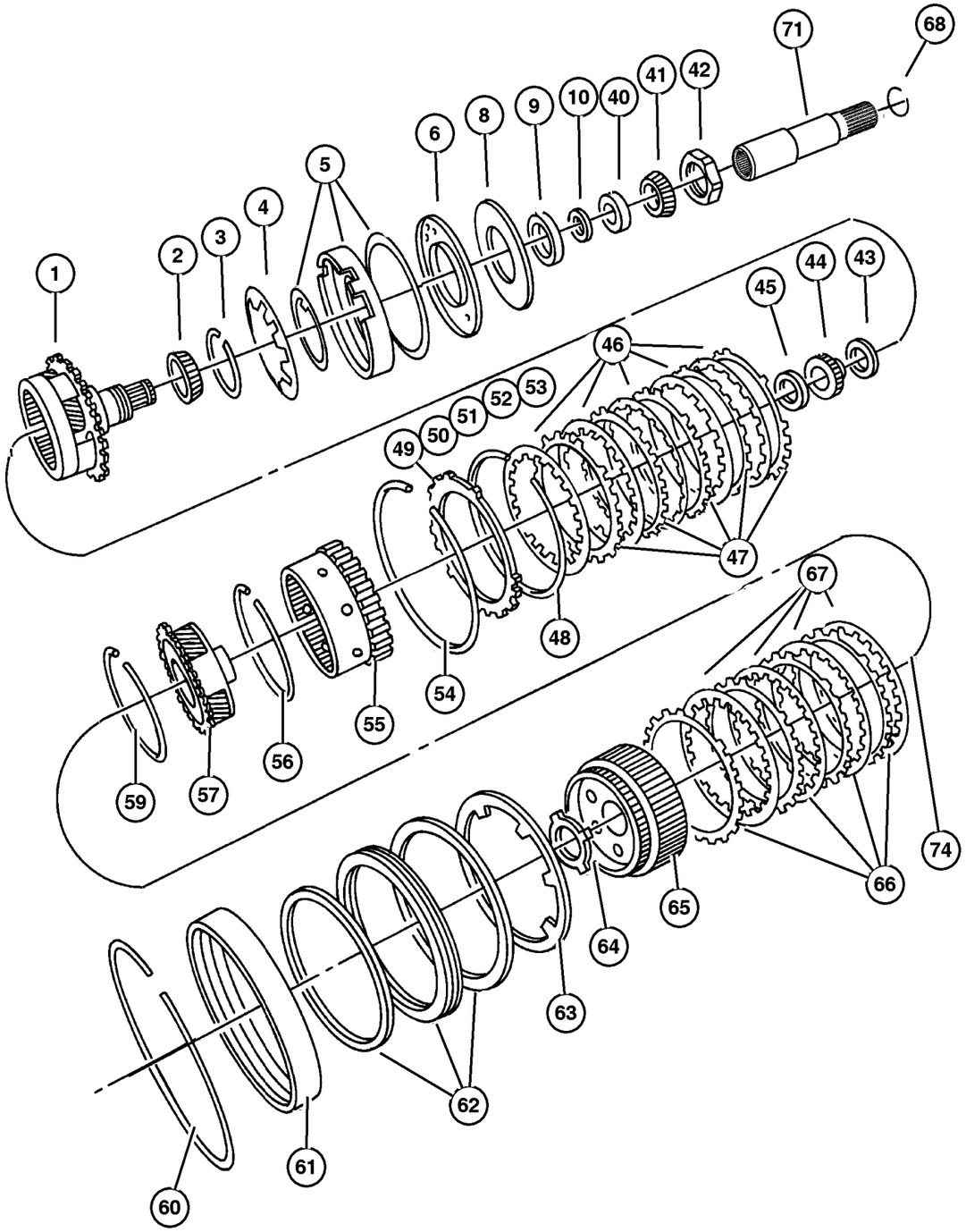

ITEM	PART NUMBER	QTY	LINE	SERIES	BODY	ENGINE	TRANS	TRIM	DESCRIPTION
		1	T				DGV		
46									DISC, Clutch
	4567 573AB	5	J, U				DGV		
		5	T				DGV		
47									PLATE, Transmission Clutch
									Reaction
	4659 055	5	J, U				DGV		
		5	T				DGV		
48									SNAP RING
	4412 395	1	J, U				DGV		
		1	T				DGV		
49	4897 452AA	1	T				DGV		PLATE PACKAGE, Low/Reverse Clutch, 5.753/6.012
50	4897 453AA	1	T				DGV		PLATE PACKAGE, Low/Reverse Clutch, 6.013/6.272
51	4897 454AA	1	T				DGV		PLATE PACKAGE, Low/Reverse Clutch, 6.273/6.532
52	4897 455AA	1	T				DGV		PLATE PACKAGE, Low/Reverse Clutch, 6.533/6.792
53	4897 456AA	1	T				DGV		PLATE PACKAGE, Low/Reverse Clutch, 6.793/7.052
54									SNAP RING
	4799 858AA	1	J, U				DGV		
		1	T				DGV		
55									GEAR, Annulus
	4799 794	1	J, U				DGV		
		1	T				DGV		
56									SNAP RING
	6035 238	2	J, U				DGV		
		2	T				DGV		
57									CARRIER, Planetary Pinion
	4567 539AB	1	J, U				DGV		
		1	T				DGV		
-58									THRUST BEARING
	4412 209	1	J, U				DGV		
		1	T				DGV		
59									SNAP RING
	6035 238	2	J, U				DGV		
		2	T				DGV		
60									SNAP RING
	4505 591	1	T				DGV		
		1	J, U				DGV		

2006 Liberty (KJ)

SERIES	LINE	BODY	ENGINE	TRANSMISSION
H =HIGHLINE	T =JEEP - 2WD	74 =SPORT UTILITY 4-DR	EKG=3.7L V6 Eng.	DG6=4-Spd. Auto. 42RLE Trans.
M =MEDIUM	J =JEEP - 4WD		ENR=2.8L 4 Cyl Turbo Diesel Eng.	DGV=4-Spd. Auto. VLP Trans.
P =PREMIUM	U =JEEP - 4WD (RHD)		ENJ=2.5L 4 Cyl 16V Turbo Diesel Eng.	DGQ=5-Spd Auto. 5-45RFE Trans.
			ED1=2.4L 4 Cyl DOHC 16v SMPI Eng.	DEH=6-Speed Man. NSG370 Trans.
				DDD=5-Speed HD Man. Trans.
				DDK=5-Speed HD Man. Trans.

Gear Train [DGV]
Figure 42RLE-440

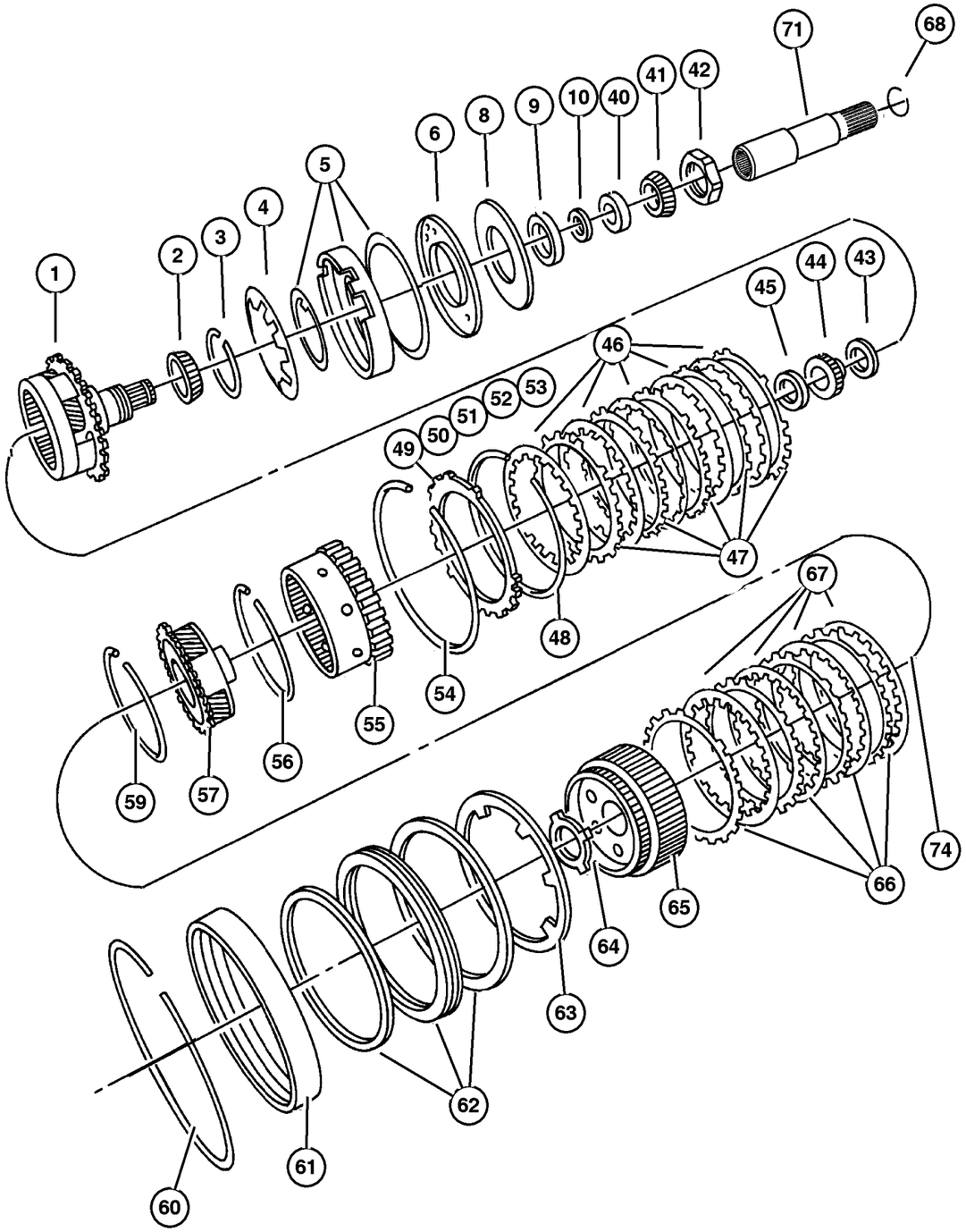

ITEM	PART NUMBER	QTY	LINE	SERIES	BODY	ENGINE	TRANS	TRIM	DESCRIPTION
61	5102 880AA	1	T				DGV		RETAINER PACKAGE, 2nd & 4th Clutch Piston
62	5102 880AA	1	T				DGV		RETAINER PACKAGE, 2nd & 4th Clutch Piston
63									SPRING, 2nd And 4th Clutch Piston
	4412 248	1	J, U				DGV		
		1	T				DGV		
64									THRUST WASHER, Second and Fourth Clutch
	4412 216AB	1	J, U				DGV		
		1	T				DGV		
65									HUB AND GEAR, Second And Fourth Clutch
	4659 618AB	1	J, U				DGV		
		1	T				DGV		
66									PLATE, Transmission Clutch Reaction
	4659 054	4	J, U				DGV		
		4	T				DGV		
67									DISC, Clutch
	4799 860AB	4	J, U				DGV		
		4	T				DGV		
68	52852 916AA	1	J, U				DGV		CLIP
-69									THRUST WASHER, Planet Pinion
	3681 949	10	T				DGV		
		6	J, U				DGV		
-70									ROLLER, Front and Rear Pinion
	3743 664	57	T				DGV		
		57	J, U				DGV		
71	52852 915AA	1	J, U				DGV		SHAFT, Intermediate
-72	52852 916AA-	1	J, U				DGV		CLIP
-73	52854 168AA-	1	T				DGV		SHAFT, Output
74	2466 224	1	T				DGV		BEARING, Output Shaft

2006 Liberty (KJ)

SERIES	LINE	BODY	ENGINE	TRANSMISSION
H =HIGHLINE	T =JEEP - 2WD	74 =SPORT UTILITY 4-DR	EKG=3.7L V6 Eng.	DG6=4-Spd. Auto. 42RLE Trans.
M =MEDIUM	J =JEEP - 4WD		ENR=2.8L 4 Cyl Turbo Diesel Eng.	DGV=4-Spd. Auto. VLP Trans.
P =PREMIUM	U =JEEP - 4WD (RHD)		ENJ=2.5L 4 Cyl 16V Turbo Diesel Eng.	DGQ=5-Spd Auto. 5-45RFE Trans.
			ED1=2.4L 4 Cyl DOHC 16v SMPI Eng.	DEH=6-Speed Man. NSG370 Trans.
				DDD=5-Speed HD Man. Trans.
				DDK=5-Speed HD Man. Trans.

AR = Use as required - = Non illustrated part # = New this model year

Valve Body [DG6]
Figure 42RLE-710

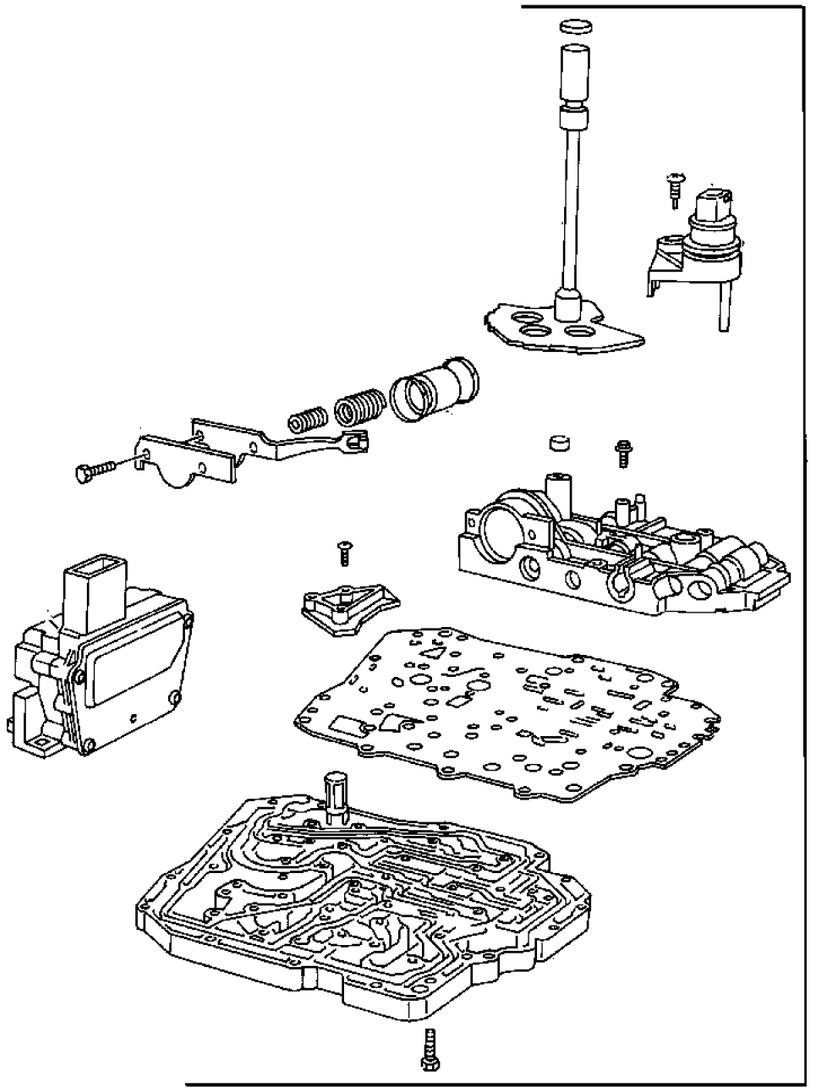

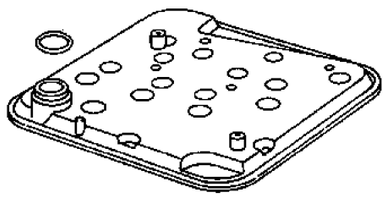

ITEM	PART NUMBER	QTY	LINE	SERIES	BODY	ENGINE	TRANS	TRIM	DESCRIPTION

NOTE:

Gasket and Seal Package includes all Valve Body Seals and Transmission Filter

Sales Codes:

[DG6]=4 Speed Automatic Transmission - [42RLE]

2006 Liberty (KJ)

SERIES	LINE	BODY	ENGINE	TRANSMISSION
H =HIGHLINE	T =JEEP - 2WD	74 =SPORT UTILITY 4-DR	EKG=3.7L V6 Eng.	DG6=4-Spd. Auto. 42RLE Trans.
M =MEDIUM	J =JEEP - 4WD		ENR=2.8L 4 Cyl Turbo Diesel Eng.	DGV=4-Spd. Auto. VLP Trans.
P =PREMIUM	U =JEEP - 4WD (RHD)		ENJ=2.5L 4 Cyl 16V Turbo Diesel Eng.	DGQ=5-Spd Auto. 5-45RFE Trans.
			ED1=2.4L 4 Cyl DOHC 16v SMPI Eng.	DEH=6-Speed Man. NSG370 Trans.
				DDD=5-Speed HD Man. Trans.
				DDK=5-Speed HD Man. Trans.

Valve Body [DGV]
Figure 42RLE-710

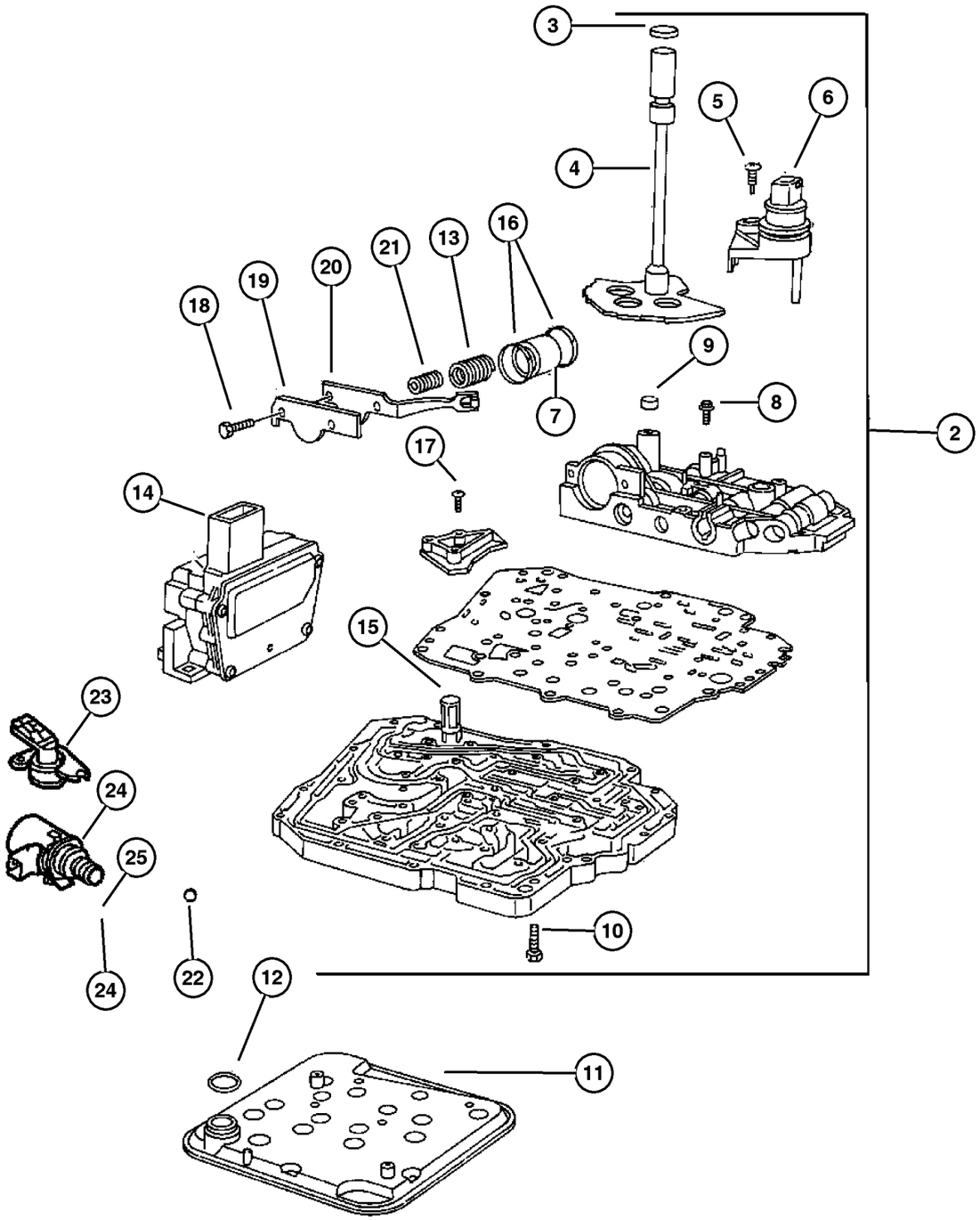

ITEM	PART NUMBER	QTY	LINE	SERIES	BODY	ENGINE	TRANS	TRIM	DESCRIPTION
NOTE:									
Gasket and Seal Package includes all Valve Body Seals and Transmission Filter									
Sales Codes:									
[DGV]=4 Speed Automatic Transmission - [42RLE / VLP]									
-1									GASKET AND SEAL PACKAGE, Valve Body
-1									GASKET AND SEAL PACKAGE, Valve Body
	5101 917AB-	1	T				DG6		
		1	T				DGV		
		1	J, U				DG6		
		1	J, U				DGV		
2									VALVE BODY
2									VALVE BODY
	52854 169AA	1	J, U				DG6		
	5078 327AA	1	T				DGV		
	52854 169AA	1	T				DG6		
	5078 327AA	1	J, U				DGV		
3									SEAL, Manual Valve Lever
3									SEAL, Manual Valve Lever
	4412 836	1	J, U				DG6		
		1	T				DGV		
		1	T				DG6		
		1	J, U				DGV		
4									LEVER, Manual Valve
4									LEVER, Manual Valve
	4800 280AA	1	J, U				DG6		
		1	T				DGV		
		1	T				DG6		
		1	J, U				DGV		
5									SCREW
5									SCREW
	6506 245AA	1	J, U				DG6		
	6508 007AA	1	T				DGV		
	6506 245AA	1	T				DG6		
	6508 007AA	1	J, U				DGV		
6									SENSOR, Manual Valve Lever
6									SENSOR, Manual Valve Lever
	4659 677AC	1	J, U				DG6		
		1	J, U				DGV		
		1	T				DG6		
		1	T				DGV		
7									PISTON, 2nd and 4th Accumulator

2006 Liberty (KJ)

SERIES	LINE	BODY	ENGINE	TRANSMISSION
H =HIGHLINE	T =JEEP - 2WD	74 =SPORT UTILITY 4-DR	EKG=3.7L V6 Eng.	DG6=4-Spd. Auto. 42RLE Trans.
M =MEDIUM	J =JEEP - 4WD		ENR=2.8L 4 Cyl Turbo Diesel Eng.	DGV=4-Spd. Auto. VLP Trans.
P =PREMIUM	U =JEEP - 4WD (RHD)		ENJ=2.5L 4 Cyl 16V Turbo Diesel Eng.	DGQ=5-Spd Auto. 5-45RFE Trans.
			ED1=2.4L 4 Cyl DOHC 16v SMPI Eng.	DEH=6-Speed Man. NSG370 Trans.
				DDD=5-Speed HD Man. Trans.
				DDK=5-Speed HD Man. Trans.

Valve Body [DGV]
Figure 42RLE-710

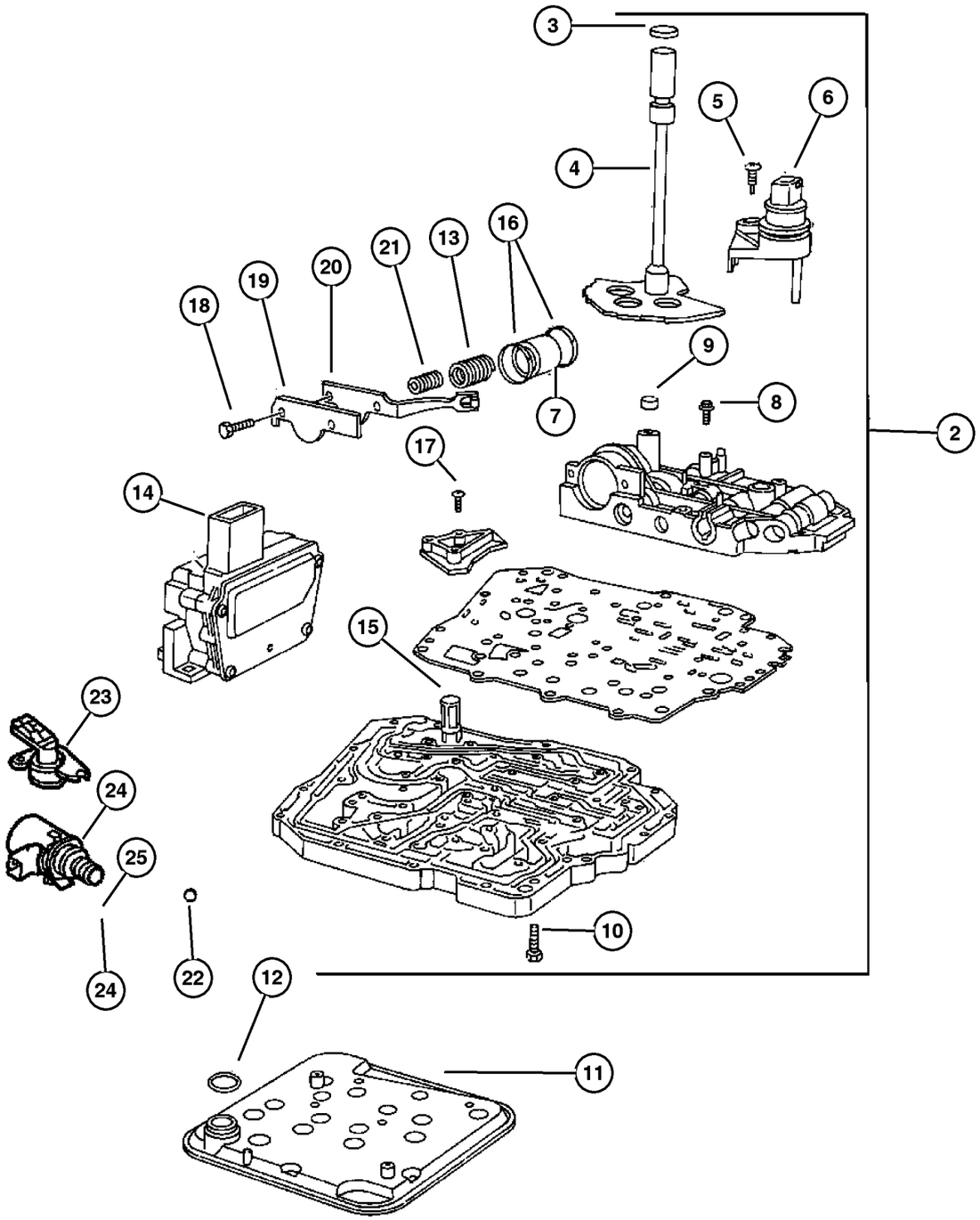

ITEM	PART NUMBER	QTY	LINE	SERIES	BODY	ENGINE	TRANS	TRIM	DESCRIPTION
7									PISTON, 2nd and 4th Accumulator
	4446 620AC	1	J, U				DG6		
		1	T				DGV		
		1	T				DG6		
		1	J, U				DGV		
8									SCREW AND WASHER, Pan Head, M5x.8x25
8									SCREW AND WASHER, Pan Head, M5x.8x25
	6500 215	28	J, U				DG6		
		2	T				DGV		
		28	T				DG6		
		2	J, U				DGV		
9									SEAL, Clutch Feed
9									SEAL, Clutch Feed
	4412 291	1	T				DG6		
		1	T				DGV		
		1	J, U				DG6		
		1	J, U				DGV		
10									SCREW AND WASHER, Pan Head, M5x.8x25
10									SCREW AND WASHER, Pan Head, M5x.8x25
	6500 215	2	T				DG6		
		2	J, U				DGV		
		2	J, U				DG6		
		2	T				DGV		
11									FILTER, Transmission Oil
11									FILTER, Transmission Oil
	52852 913AB	1	J, U				DG6		
		1	T				DGV		
		1	T				DG6		
		1	J, U				DGV		
12									O RING, Trans Oil Filter
12									O RING, Trans Oil Filter
	6032 780	1	J, U				DG6		
		1	J, U				DGV		
		1	T				DG6		
		1	T				DGV		
13									SPRING, Accumulator
13									SPRING, Accumulator
	4471 880	1	T				DG6		

2006 Liberty (KJ)

SERIES	LINE	BODY	ENGINE	TRANSMISSION
H =HIGHLINE	T =JEEP - 2WD	74 =SPORT UTILITY 4-DR	EKG=3.7L V6 Eng.	DG6=4-Spd. Auto. 42RLE Trans.
M =MEDIUM	J =JEEP - 4WD		ENR=2.8L 4 Cyl Turbo Diesel Eng.	DGV=4-Spd. Auto. VLP Trans.
P =PREMIUM	U =JEEP - 4WD (RHD)		ENJ=2.5L 4 Cyl 16V Turbo Diesel Eng.	DGQ=5-Spd Auto. 5-45RFE Trans.
			ED1=2.4L 4 Cyl DOHC 16v SMPI Eng.	DEH=6-Speed Man. NSG370 Trans.
				DDD=5-Speed HD Man. Trans.
				DDK=5-Speed HD Man. Trans.

Valve Body [DGV]
Figure 42RLE-710

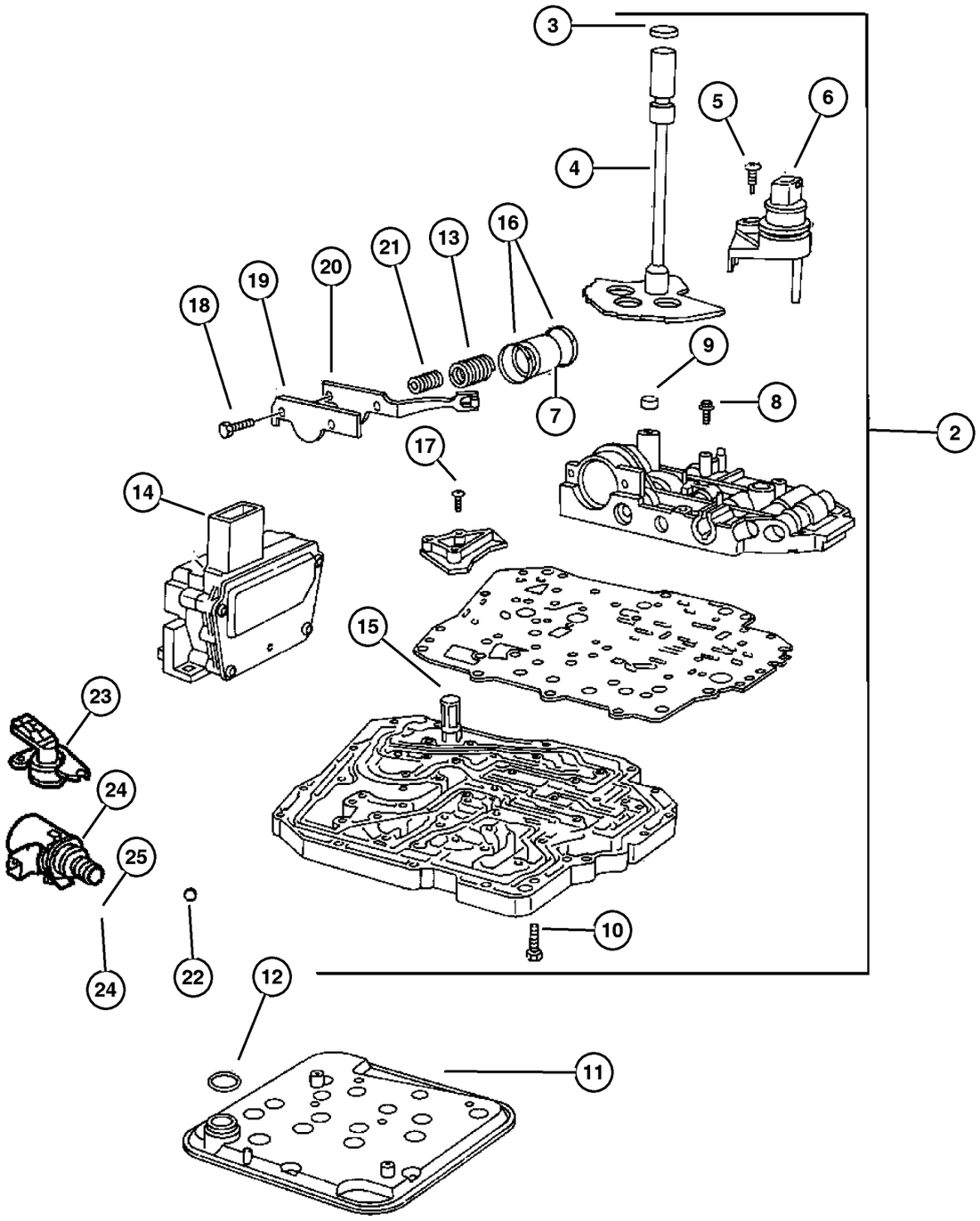

ITEM	PART NUMBER	QTY	LINE	SERIES	BODY	ENGINE	TRANS	TRIM	DESCRIPTION
	4800 310AA	1	T				DGV		
	4471 880	1	J, U				DG6		
	4800 310AA	1	J, U				DGV		
14									SOLENOID PACKAGE, Valve Body
14									SOLENOID PACKAGE, Valve Body
	5143 151AA	1	J, U				DG6		
		1	T				DGV		
		1	T				DG6		
		1	J, U				DGV		
15									SCREEN, Transmission Regulator Valve
15									SEAL, Accumulator, Serviced with piston, Seal Is Bonded (Not Serviced) (NOT SERVICED)
	3878 313	1	J, U				DG6		
		1	T				DG6		
16									SEAL, Accumulator, Serviced with piston, Seal Is Bonded (Not Serviced)
16									SCREW AND WASHER, Pan Head, M5x.8x25 (NOT SERVICED)
	6500 215	2	J, U				DGV		
		2	T				DGV		
17									SCREW AND WASHER, Pan Head, M5x.8x25
17									SCREW, Pan Head
	6500 215	2	T				DG6		
	6508 372AA	7	T				DGV		
	6500 215	2	J, U				DG6		
	6508 372AA	7	J, U				DGV		
18									SCREW, Pan Head, M5 x 0.8 x 12. 60
18									RETAINER, Transmission 2nd and 4th Accumulator Piston
	6503 232	2	J, U				DG6		
	4431 711	1	T				DGV		
	6503 232	7	T				DG6		
	4431 711	1	J, U				DGV		
19									RETAINER, Transmission 2nd and 4th Accumulator Piston
19									DETENT, Valve Body

2006 Liberty (KJ)

SERIES	LINE	BODY	ENGINE	TRANSMISSION
H =HIGHLINE	T =JEEP - 2WD	74 =SPORT UTILITY 4-DR	EKG=3.7L V6 Eng.	DG6=4-Spd. Auto. 42RLE Trans.
M =MEDIUM	J =JEEP - 4WD		ENR=2.8L 4 Cyl Turbo Diesel Eng.	DGV=4-Spd. Auto. VLP Trans.
P =PREMIUM	U =JEEP - 4WD (RHD)		ENJ=2.5L 4 Cyl 16V Turbo Diesel Eng.	DGQ=5-Spd Auto. 5-45RFE Trans.
			ED1=2.4L 4 Cyl DOHC 16v SMPI Eng.	DEH=6-Speed Man. NSG370 Trans.
				DDD=5-Speed HD Man. Trans.
				DDK=5-Speed HD Man. Trans.

Valve Body [DGV]
Figure 42RLE-710

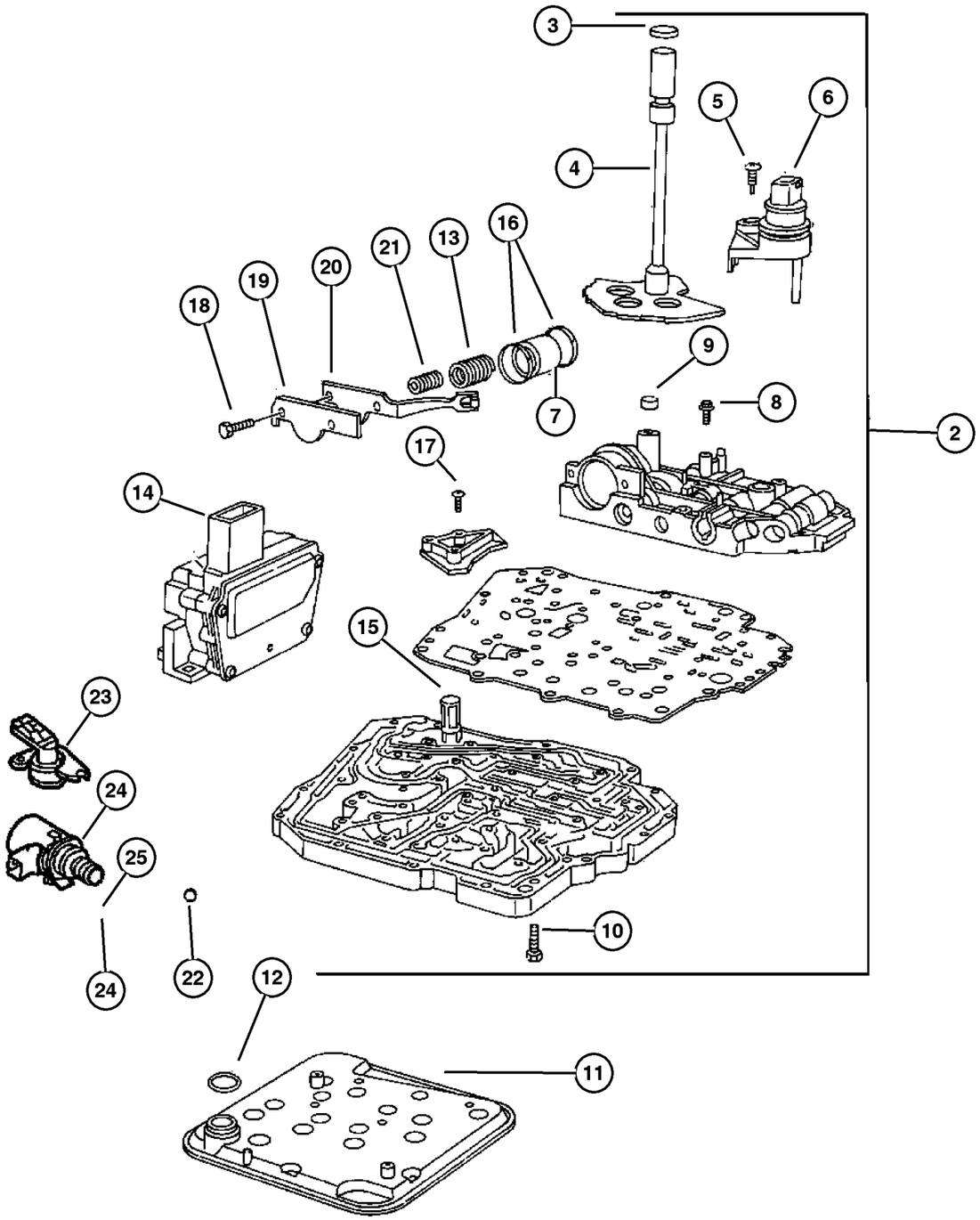

ITEM	PART NUMBER	QTY	LINE	SERIES	BODY	ENGINE	TRANS	TRIM	DESCRIPTION
	4431 711	1	T				DG6		
	4431 710	1	T				DGV		
	4431 711	1	J, U				DG6		
	4431 710	1	J, U				DGV		
20									DETENT, Valve Body
20									SPRING, Accumulator
	4431 710	1	J, U				DG6		
	4800 310AA	1	T				DGV		
	4431 710	1	T				DG6		
	4800 310AA	1	J, U				DGV		
21									SPRING, Accumulator
-21									DOWEL, M6x16
	4471 880	1	T				DG6		
	6100 994	1	J, U				DGV		
	4471 880	1	J, U				DG6		
	6100 994	1	T				DGV		
-22									DOWEL, M6x16
22									BALL, Check
	6100 994	1	J, U				DG6		
	0147 482	2	J, U				DGV		
	6100 994	1	T				DG6		
	0147 482	2	T				DGV		
-23									VALVE, Transmission Regulator
23									SENSOR, TRANS PRESSURE TRANSDUCER
	4659 081	1	J, U				DG6		
	5078 336AA	1	J, U				DGV		
	4659 081	1	T				DG6		
	5078 336AA	1	T				DGV		
24									BALL, Check
24									SENSOR, TRANS VARIABLE FORCE SOLENOID
	5211 8261	4	T				DG6		
	5078 335AA	1	J, U				DGV		
	5211 8261	4	J, U				DG6		
	5078 335AA	1	T				DGV		
25									BALL, Valve Body Check
	0104 918	1	J, U				DG6		
		1	T				DG6		

2006 Liberty (KJ)

SERIES	LINE	BODY	ENGINE	TRANSMISSION
H =HIGHLINE	T =JEEP - 2WD	74 =SPORT UTILITY 4-DR	EKG=3.7L V6 Eng.	DG6=4-Spd. Auto. 42RLE Trans.
M =MEDIUM	J =JEEP - 4WD		ENR=2.8L 4 Cyl Turbo Diesel Eng.	DGV=4-Spd. Auto. VLP Trans.
P =PREMIUM	U =JEEP - 4WD (RHD)		ENJ=2.5L 4 Cyl 16V Turbo Diesel Eng.	DGQ=5-Spd Auto. 5-45RFE Trans.
			ED1=2.4L 4 Cyl DOHC 16v SMPI Eng.	DEH=6-Speed Man. NSG370 Trans.
				DDD=5-Speed HD Man. Trans.
				DDK=5-Speed HD Man. Trans.

AR = Use as required - = Non illustrated part # = New this model year

September 20, 2005

« RETURN TO GROUP INDEX

Accumulator Pistons & Springs [DG6]
Figure 42RLE-730

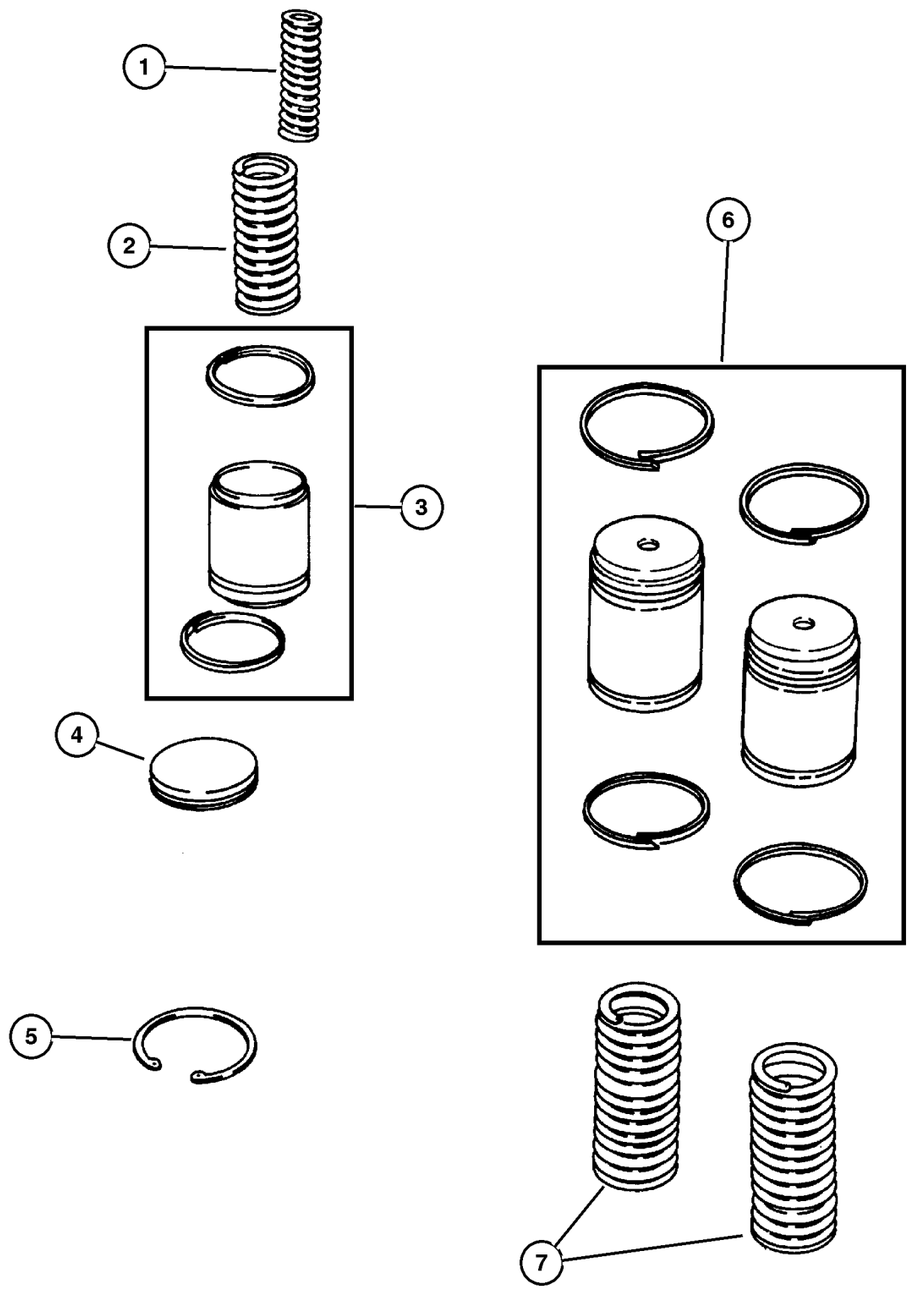

ITEM	PART NUMBER	QTY	LINE	SERIES	BODY	ENGINE	TRANS	TRIM	DESCRIPTION
NOTE:									
Sales Codes:									
[DG6]=4 Speed Automatic Transmission - [42RLE]									
1									SPRING, Accumulator
	4567 575	1	T				DG6		
		1	J, U				DG6		
2									SPRING, Accumulator
	4471 880	1	T				DG6		
		1	J, U				DG6		
3									PISTON, 2nd and 4th Accumulator
	4446 620AC	1	J, U				DG6		
		1	T				DG6		
4									COVER, Accumulator
	4431 617AB	1	J, U				DG6		
		1	T				DG6		
5									SNAP RING
	6501 695	1	J, U				DG6		
		1	T				DG6		
6									PISTON, 2nd and 4th Accumulator
	4446 620AC	1	J, U				DG6		
		1	T				DG6		
7									SPRING, Accumulator
	4800 310AA	2	J, U				DG6		
		1	T				DG6		

2006 Liberty (KJ)

SERIES	LINE	BODY	ENGINE	TRANSMISSION
H =HIGHLINE	T =JEEP - 2WD	74 =SPORT UTILITY 4-DR	EKG=3.7L V6 Eng.	DG6=4-Spd. Auto. 42RLE Trans.
M =MEDIUM	J =JEEP - 4WD		ENR=2.8L 4 Cyl Turbo Diesel Eng.	DGV=4-Spd. Auto. VLP Trans.
P =PREMIUM	U =JEEP - 4WD (RHD)		ENJ=2.5L 4 Cyl 16V Turbo Diesel Eng.	DGQ=5-Spd Auto. 5-45RFE Trans.
			ED1=2.4L 4 Cyl DOHC 16v SMPI Eng.	DEH=6-Speed Man. NSG370 Trans.
				DDD=5-Speed HD Man. Trans.
				DDK=5-Speed HD Man. Trans.

Accumulator Pistons & Springs [DGV]
Figure 42RLE-740

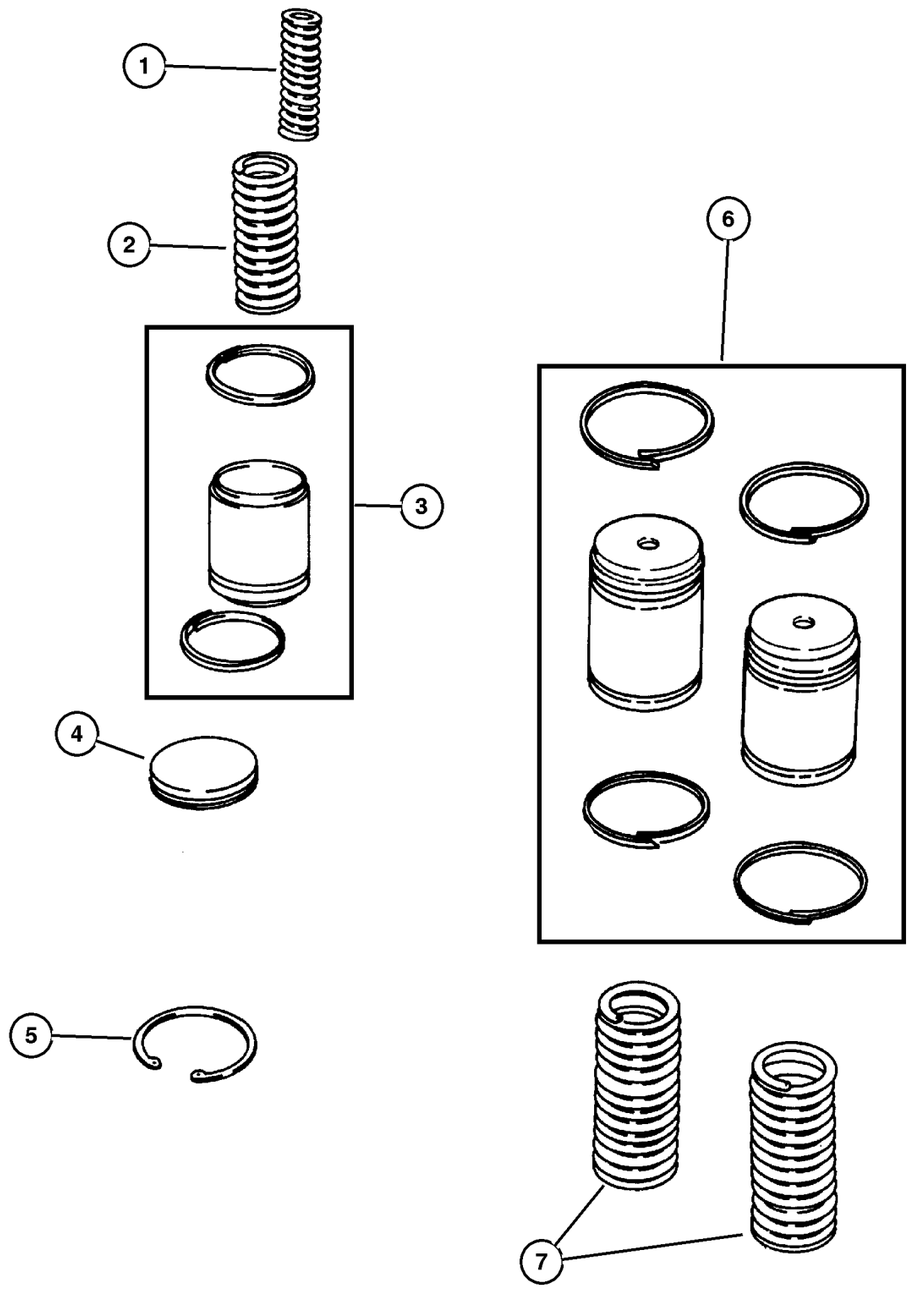

ITEM	PART NUMBER	QTY	LINE	SERIES	BODY	ENGINE	TRANS	TRIM	DESCRIPTION
NOTE:									
Sales Codes:									
[DGV]=4 Speed Automatic Transmission - [42RLE / VLP]									
1									SPRING, Accumulator
	4567 575	1	T				DGV		
		1	J, U				DGV		
2									SPRING, Accumulator
	4471 880	1	T				DGV		
		1	J, U				DGV		
3									PISTON, 2nd and 4th Accumulator
	4446 620AC	1	T				DGV		
		1	J, U				DGV		
4									COVER, Accumulator
	4431 617AB	1	T				DGV		
		1	J, U				DGV		
5									SNAP RING
	6501 695	1	T				DGV		
		1	J, U				DGV		
6									PISTON, 2nd and 4th Accumulator
	4446 620AC	1	T				DGV		
		1	J, U				DGV		
7									SPRING, Accumulator
	4800 310AA	1	T				DGV		
		1	J, U				DGV		

2006 Liberty (KJ)

SERIES	LINE	BODY	ENGINE	TRANSMISSION
H =HIGHLINE	T =JEEP - 2WD	74 =SPORT UTILITY 4-DR	EKG=3.7L V6 Eng.	DG6=4-Spd. Auto. 42RLE Trans.
M =MEDIUM	J =JEEP - 4WD		ENR=2.8L 4 Cyl Turbo Diesel Eng.	DGV=4-Spd. Auto. VLP Trans.
P =PREMIUM	U =JEEP - 4WD (RHD)		ENJ=2.5L 4 Cyl 16V Turbo Diesel Eng.	DGQ=5-Spd Auto. 5-45RFE Trans.
			ED1=2.4L 4 Cyl DOHC 16v SMPI Eng.	DEH=6-Speed Man. NSG370 Trans.
				DDD=5-Speed HD Man. Trans.
				DDK=5-Speed HD Man. Trans.

Parking Sprag [DG6]
Figure 42RLE-750

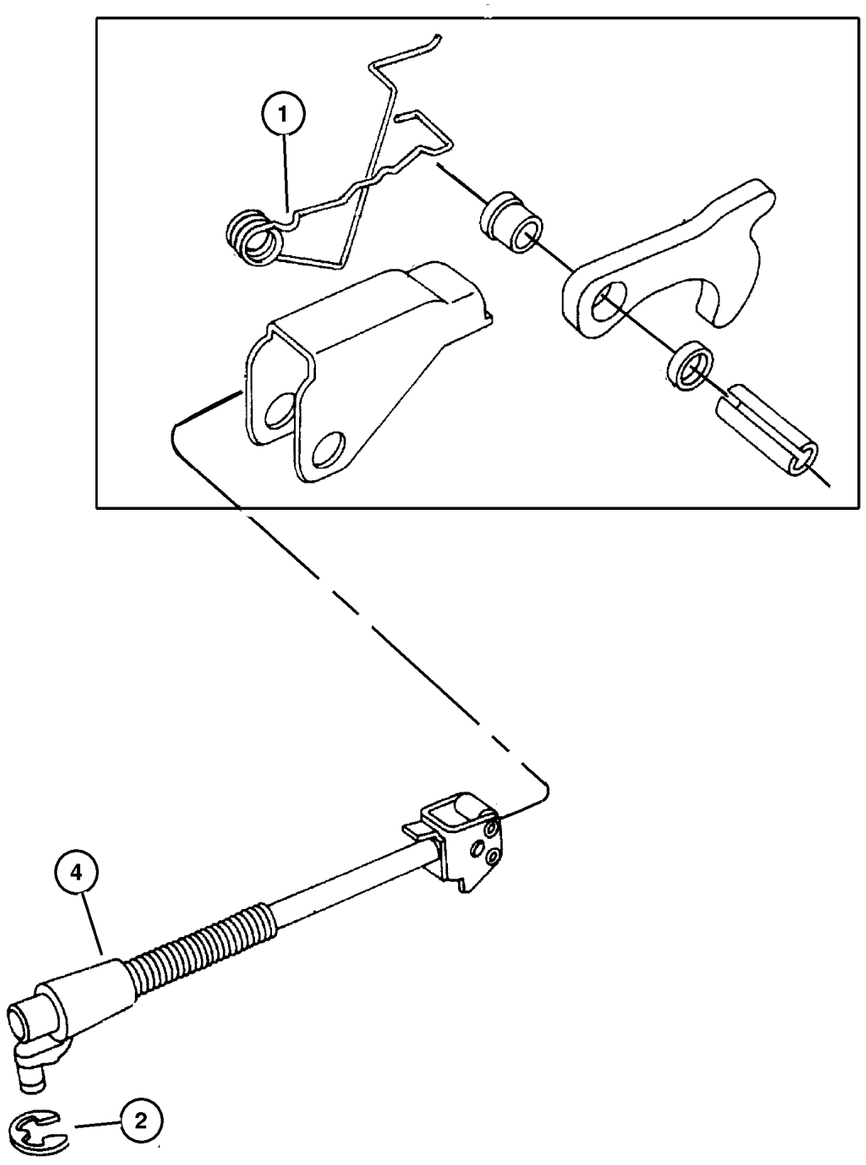

ITEM	PART NUMBER	QTY	LINE	SERIES	BODY	ENGINE	TRANS	TRIM	DESCRIPTION
NOTES:									
Sales Codes									
[DG6]= 4 Speed Automatic Transmission - [42RLE]									
1									SPRING, Parking Sprag Return
	52852 949AA	1	T				DG6		
		1	J, U				DG6		
2									SNAP RING, Rod, (NOT SERVICED) (Not Serviced)
-3									SCREW AND WASHER, Hex Head, M5x.8x12
	6503 384	1	J, U				DG6		
		1	T				DG6		
4									SHAFT, Parking Sprag
	4431 999	1	J, U				DG6		
		1	T				DG6		
-5									ROD, Parking Sprag
	4800 283AA-	1	J, U				DG6		
		1	T				DG6		
-6									BRACKET, Parking Sprag
	52852 948AA-	1	J, U				DG6		
		1	T				DG6		

2006 Liberty (KJ)

SERIES	LINE	BODY	ENGINE	TRANSMISSION
H =HIGHLINE	T =JEEP - 2WD	74 =SPORT UTILITY 4-DR	EKG=3.7L V6 Eng.	DG6=4-Spd. Auto. 42RLE Trans.
M =MEDIUM	J =JEEP - 4WD		ENR=2.8L 4 Cyl Turbo Diesel Eng.	DGV=4-Spd. Auto. VLP Trans.
P =PREMIUM	U =JEEP - 4WD (RHD)		ENJ=2.5L 4 Cyl 16V Turbo Diesel Eng.	DGQ=5-Spd Auto. 5-45RFE Trans.
			ED1=2.4L 4 Cyl DOHC 16v SMPI Eng.	DEH=6-Speed Man. NSG370 Trans.
				DDD=5-Speed HD Man. Trans.
				DDK=5-Speed HD Man. Trans.

Parking Sprag [DGV]
Figure 42RLE-760

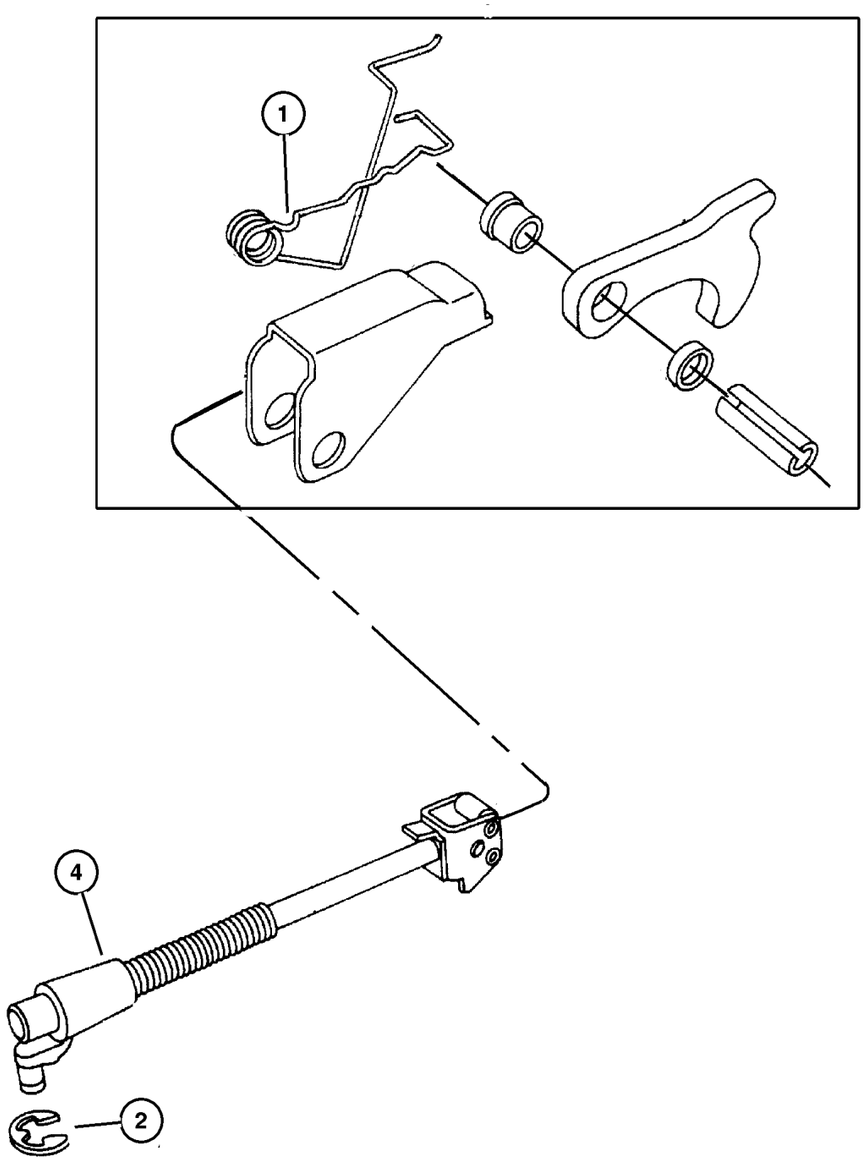

ITEM	PART NUMBER	QTY	LINE	SERIES	BODY	ENGINE	TRANS	TRIM	DESCRIPTION
NOTES:									
Sales Codes									
[DGV]= 4 Speed Automatic Transmission - [42RLE / VLP]									
1									SPRING, Parking Sprag Return
	52852 949AA	1	T				DGV		
		1	J, U				DGV		
2									SNAP RING, Rod, (NOT SERVICED) (Not Serviced)
-3									SCREW AND WASHER, Hex Head, M5x.8x12
	6503 384	1	J, U				DGV		
		1	T				DGV		
4									SHAFT, Parking Sprag
	4431 999	1	T				DGV		
		1	J, U				DGV		
-5									ROD, Parking Sprag
	4800 283AA-	1	T				DGV		
		1	J, U				DGV		
-6									BRACKET, Parking Sprag
	52852 948AA-	1	T				DGV		
		1	J, U				DGV		

2006 Liberty (KJ)

SERIES	LINE	BODY	ENGINE	TRANSMISSION
H =HIGHLINE	T =JEEP - 2WD	74 =SPORT UTILITY 4-DR	EKG=3.7L V6 Eng.	DG6=4-Spd. Auto. 42RLE Trans.
M =MEDIUM	J =JEEP - 4WD		ENR=2.8L 4 Cyl Turbo Diesel Eng.	DGV=4-Spd. Auto. VLP Trans.
P =PREMIUM	U =JEEP - 4WD (RHD)		ENJ=2.5L 4 Cyl 16V Turbo Diesel Eng.	DGQ=5-Spd Auto. 5-45RFE Trans.
			ED1=2.4L 4 Cyl DOHC 16v SMPI Eng.	DEH=6-Speed Man. NSG370 Trans.
				DDD=5-Speed HD Man. Trans.
				DDK=5-Speed HD Man. Trans.

Gearshift Control [DG6 & DGV]
Figure 42RLE-1210

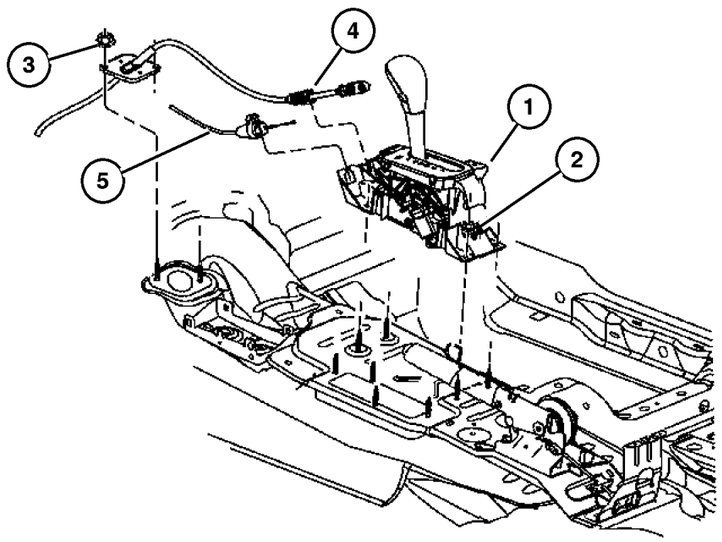

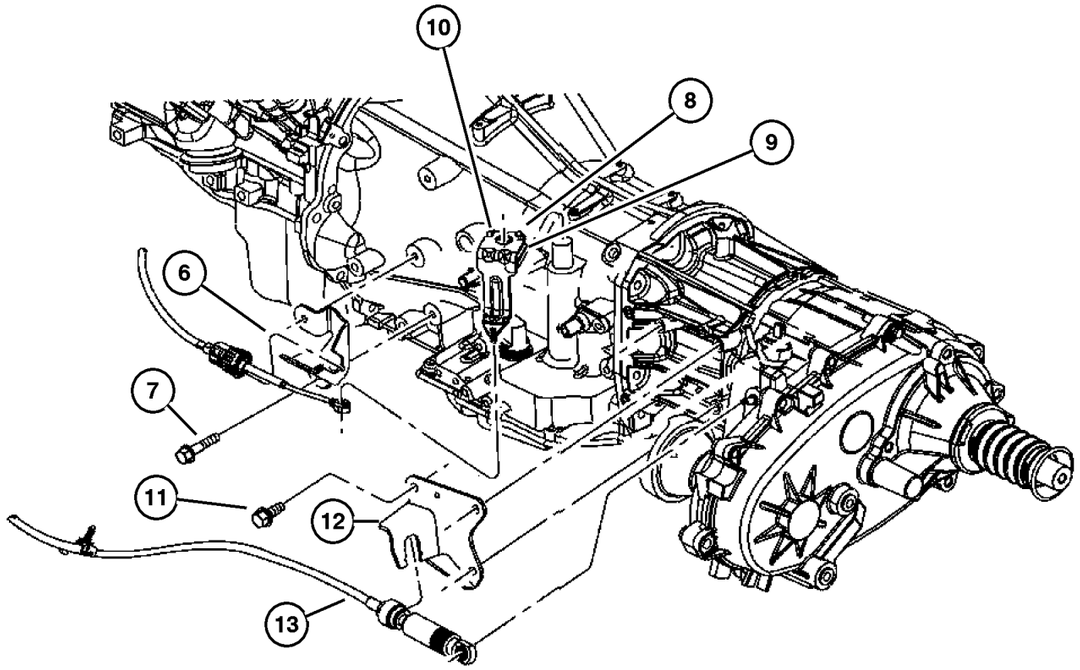

ITEM	PART NUMBER	QTY	LINE	SERIES	BODY	ENGINE	TRANS	TRIM	DESCRIPTION
NOTE:									
Sales Codes:									
[DGV]=4 Speed Automatic Transmission - [42RLE / VLP]									
[DG6]=4 Speed Automatic Transmission - [42RLE]									
[DHN]=Command-Trac Part Time [4WD] System									
[DHE]=Command-Trac Part Time Heavy Duty [4WD] System									
[DHP]=Select-Trac Full Time [4WD] System									
[DG0]=All Automatic Transmissions									
1									HOUSING AND LEVER, Shifter
	52109 779AC	1	J, T				DG0		
	52109 780AC	1	U				DG0		
2	6104 725AA	4							NUT AND WASHER, M6x1
3	6502 726	2							NUT
4	52109 781AA	1					DG0		CABLE, Gearshift Control
5	52104 319AC	1					DG0		CABLE, Gearshift Lock
6	52128 867AA	1					DG6, DGV		BRACKET, Shift Cable
7	6101 758	2					DGQ		SCREW, Hex Head, M8x1.25x20
8	52109 749AB	1				EK0	DG6, DGV		LEVER, Manual Control
9	6506 676AA	1				EK0	DG6, DGV		NUT & WASHER, M8x1.25
10									SCREW, M8-1.25, (NOT SERVICED) (Not Serviced)
11	6101 752	3	J, U				DG0		SCREW AND WASHER, Hex Head, M10x1.5x28
12	52128 954AB	1	J, U				DG6, DGV		BRACKET, Shifter
13									SHIFTER, Transfer Case
	52128 999AG	1	J, U						With [DHN & Or DHE]
	52129 243AF	1	J, U						With [DHP]

2006 Liberty (KJ)

SERIES	LINE	BODY	ENGINE	TRANSMISSION
H =HIGHLINE	T =JEEP - 2WD	74 =SPORT UTILITY 4-DR	EKG=3.7L V6 Eng.	DG6=4-Spd. Auto. 42RLE Trans.
M =MEDIUM	J =JEEP - 4WD		ENR=2.8L 4 Cyl Turbo Diesel Eng.	DGV=4-Spd. Auto. VLP Trans.
P =PREMIUM	U =JEEP - 4WD (RHD)		ENJ=2.5L 4 Cyl 16V Turbo Diesel Eng.	DGQ=5-Spd Auto. 5-45RFE Trans.
			ED1=2.4L 4 Cyl DOHC 16v SMPI Eng.	DEH=6-Speed Man. NSG370 Trans.
				DDD=5-Speed HD Man. Trans.
				DDK=5-Speed HD Man. Trans.

Group – 5–45RFE

Automatic Transmission Multi–Speed

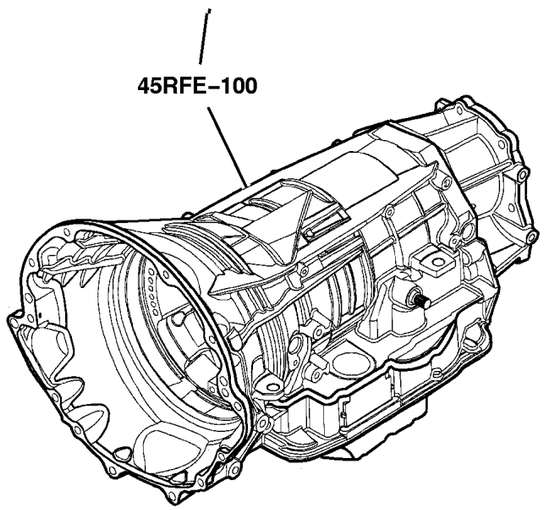

5–45RFE–100 Transmission Assembly 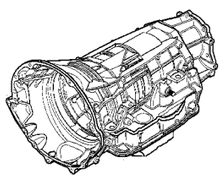	**5–45RFE–200** Case and Extension 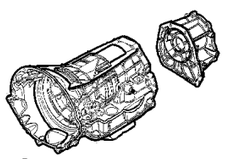	**5–45RFE–300** Oil Pump 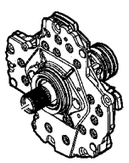	**5–45RFE–400** Gear Train 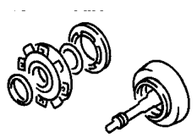
5–45RFE–700 Valve Body 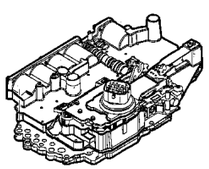	**5–45RFE–1200** Gearshift Controls 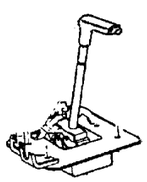	**5–45RFE–1300** Seal and Shim Packages 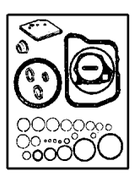	

GROUP 5-45RFE - Automatic Transmission Multi-Speed

Illustration Title — Group-Fig. No.

Transmission Assembly
Transmission Assembly [DGQ] . . . . . Fig. 5-45RFE-110
Transmission Mounting [DGQ] . . . . . Fig. 5-45RFE-120

Case and Extension
Adapter . . . . . Fig. 5-45RFE-210
Transmission Case & Related Parts [DGQ] . . . . . Fig. 5-45RFE-220

Oil Pump
Pump, Oil [DGQ] . . . . . Fig. 5-45RFE-310

Gear Train
Input Shaft [DGQ] . . . . . Fig. 5-45RFE-410
Underdrive [DGQ] . . . . . Fig. 5-45RFE-420
Overdrive [DGQ] . . . . . Fig. 5-45RFE-430
2 / 4 Clutch Retainer [DGQ] . . . . . Fig. 5-45RFE-440
Input / Reverse Planetary [DGQ] . . . . . Fig. 5-45RFE-450
Reaction Annulus / Sun Gear [DGQ] . . . . . Fig. 5-45RFE-460
Low / Reverse Clutch [DGQ] . . . . . Fig. 5-45RFE-470

Valve Body
Valve Body [DGQ] . . . . . Fig. 5-45RFE-710
Parking Sprag [DGQ] . . . . . Fig. 5-45RFE-720

Gearshift Controls
Shifter Control [DGQ] . . . . . Fig. 5-45RFE-1210
Manual Control Lever [DGQ] . . . . . Fig. 5-45RFE-1220

Seal and Shim Packages
L / R Clutch Package [DGQ] . . . . . Fig. 5-45RFE-1310
Input Clutch Plate Package [DGQ] . . . . . Fig. 5-45RFE-1320
Overhaul / Seal & Gasket Package [DGQ] . . . . . Fig. 5-45RFE-1330
Input Clutch Package [DGQ] . . . . . Fig. 5-45RFE-1340
Planetary Plate Package [DGQ] . . . . . Fig. 5-45RFE-1350
2 & 4 Clutch Package [DGQ] . . . . . Fig. 5-45RFE-1360

Transmission Assembly [DGQ]
Figure 5-45RFE-110

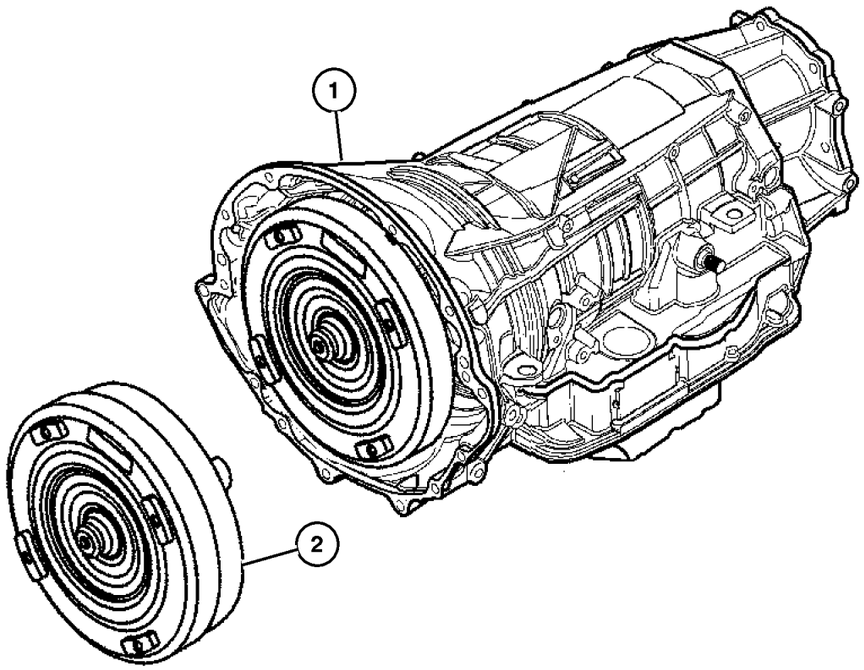

ITEM	PART NUMBER	QTY	LINE	SERIES	BODY	ENGINE	TRANS	TRIM	DESCRIPTION
NOTE:									
Sales Codes:									
[DGQ]=5 Speed Automatic Transmission - [5-45RFE]									
[EN0]=All 4/5 Cyl. Turbo Diesel Engines									
1	5143 976AB	1	J, U			EN0	DGQ		TRANSMISSION KIT, Automatic, With Stamp # [52119462AD]
2	5175 969AB	1	J, U			EN0	DGQ		CONVERTER PACKAGE, Torque

2006 Liberty (KJ)

SERIES	LINE	BODY	ENGINE	TRANSMISSION
H =HIGHLINE	T =JEEP - 2WD	74 =SPORT UTILITY 4-DR	EKG=3.7L V6 Eng.	DG6=4-Spd. Auto. 42RLE Trans.
M =MEDIUM	J =JEEP - 4WD		ENR=2.8L 4 Cyl Turbo Diesel Eng.	DGV=4-Spd. Auto. VLP Trans.
P =PREMIUM	U =JEEP - 4WD (RHD)		ENJ=2.5L 4 Cyl 16V Turbo Diesel Eng.	DGQ=5-Spd Auto. 5-45RFE Trans.
			ED1=2.4L 4 Cyl DOHC 16v SMPI Eng.	DEH=6-Speed Man. NSG370 Trans.
				DDD=5-Speed HD Man. Trans.
				DDK=5-Speed HD Man. Trans.

Transmission Mounting [DGQ]
Figure 5-45RFE-120

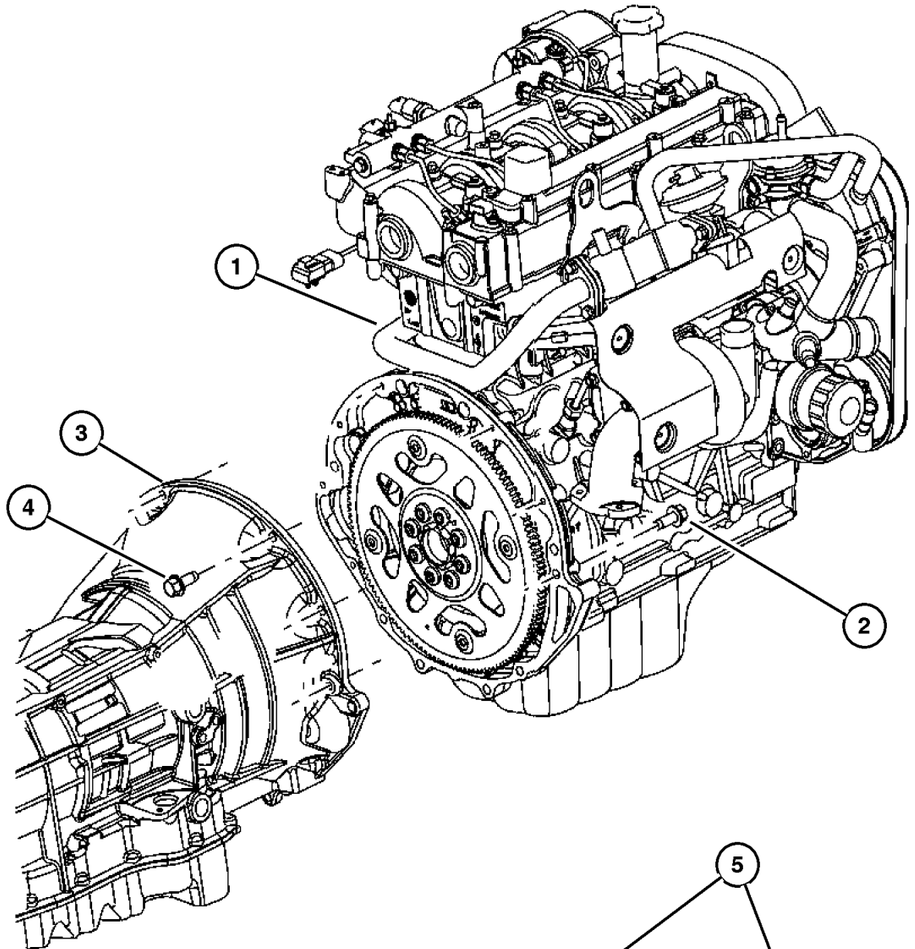

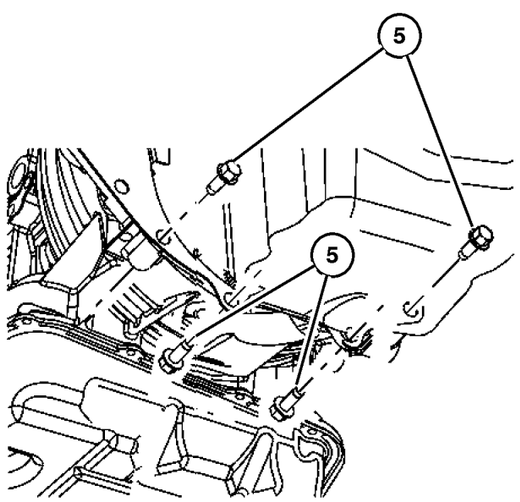

ITEM	PART NUMBER	QTY	LINE	SERIES	BODY	ENGINE	TRANS	TRIM	DESCRIPTION
NOTE:									
Sales Codes:									
[DGQ]=5 Speed Automatic Transmission - [5-45RFE]									
[ENO]=All 4/5 Cyl. Turbo Diesel Engines									
1									ENGINE, Complete, Diesel, See Engine Group, (NOT SERVICED) (Not Serviced)
2	0154 877AA	1				EN0	DGQ		SCREW AND WASHER, Hex Head
3									TRANSMISSION, See Illustration [110], (NOT SERVICED) (Not Serviced)
4	6022 266	6				EN0	DGQ		SCREW, Hex Head, .375-16x1.5
5	6102 026	4				EN0	DGQ		SCREW

2006 Liberty (KJ)

SERIES	LINE	BODY	ENGINE	TRANSMISSION
H =HIGHLINE	T =JEEP - 2WD	74 =SPORT UTILITY 4-DR	EKG=3.7L V6 Eng.	DG6=4-Spd. Auto. 42RLE Trans.
M =MEDIUM	J =JEEP - 4WD		ENR=2.8L 4 Cyl Turbo Diesel Eng.	DGV=4-Spd. Auto. VLP Trans.
P =PREMIUM	U =JEEP - 4WD (RHD)		ENJ=2.5L 4 Cyl 16V Turbo Diesel Eng.	DGQ=5-Spd Auto. 5-45RFE Trans.
			ED1=2.4L 4 Cyl DOHC 16v SMPI Eng.	DEH=6-Speed Man. NSG370 Trans.
				DDD=5-Speed HD Man. Trans.
				DDK=5-Speed HD Man. Trans.

Adapter
Figure 5-45RFE-210

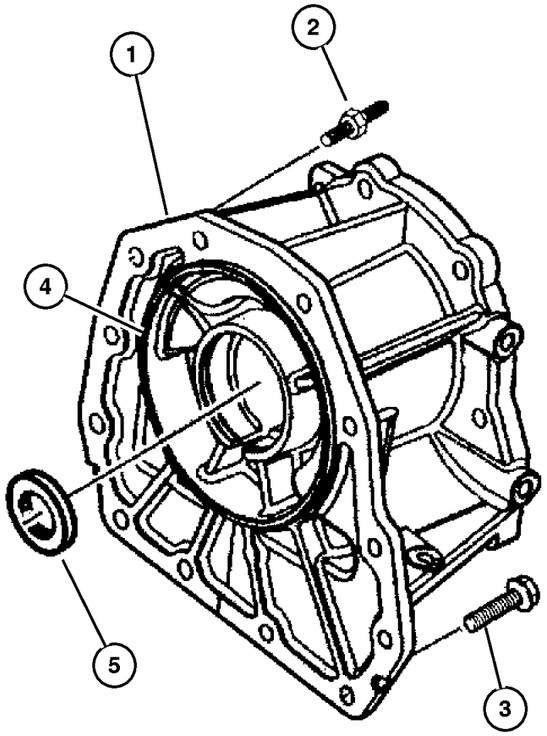

ITEM	PART NUMBER	QTY	LINE	SERIES	BODY	ENGINE	TRANS	TRIM	DESCRIPTION
NOTE:									
Sales Codes:									
[DGQ]=5 Speed Automatic Transmission - [5-45RFE]									
[EN0]=All 4/5 Cyl. Turbo Diesel Engines									
1	52104 357AC	1	J, U			EN0	DGQ		ADAPTER, Transfer Case
2	6505 064AA	2	J, U			EN0	DGQ		STUD, M10x1.5x62
3	6504 774	10	J, U			EN0	DGQ		SCREW AND WASHER, Hex Head, M10x1.5x37
4	52119 498AA	1	J, U			EN0	DGQ		SEAL, Adapter
5	52119 498AA	1	J, U			EN0	DGQ		SEAL, Adapter

2006 Liberty (KJ)

SERIES	LINE	BODY	ENGINE	TRANSMISSION
H =HIGHLINE	T =JEEP - 2WD	74 =SPORT UTILITY 4-DR	EKG=3.7L V6 Eng.	DG6=4-Spd. Auto. 42RLE Trans.
M =MEDIUM	J =JEEP - 4WD		ENR=2.8L 4 Cyl Turbo Diesel Eng.	DGV=4-Spd. Auto. VLP Trans.
P =PREMIUM	U =JEEP - 4WD (RHD)		ENJ=2.5L 4 Cyl 16V Turbo Diesel Eng.	DGQ=5-Spd Auto. 5-45RFE Trans.
			ED1=2.4L 4 Cyl DOHC 16v SMPI Eng.	DEH=6-Speed Man. NSG370 Trans.
				DDD=5-Speed HD Man. Trans.
				DDK=5-Speed HD Man. Trans.

Transmission Case & Related Parts [DGQ]
Figure 5-45RFE-220

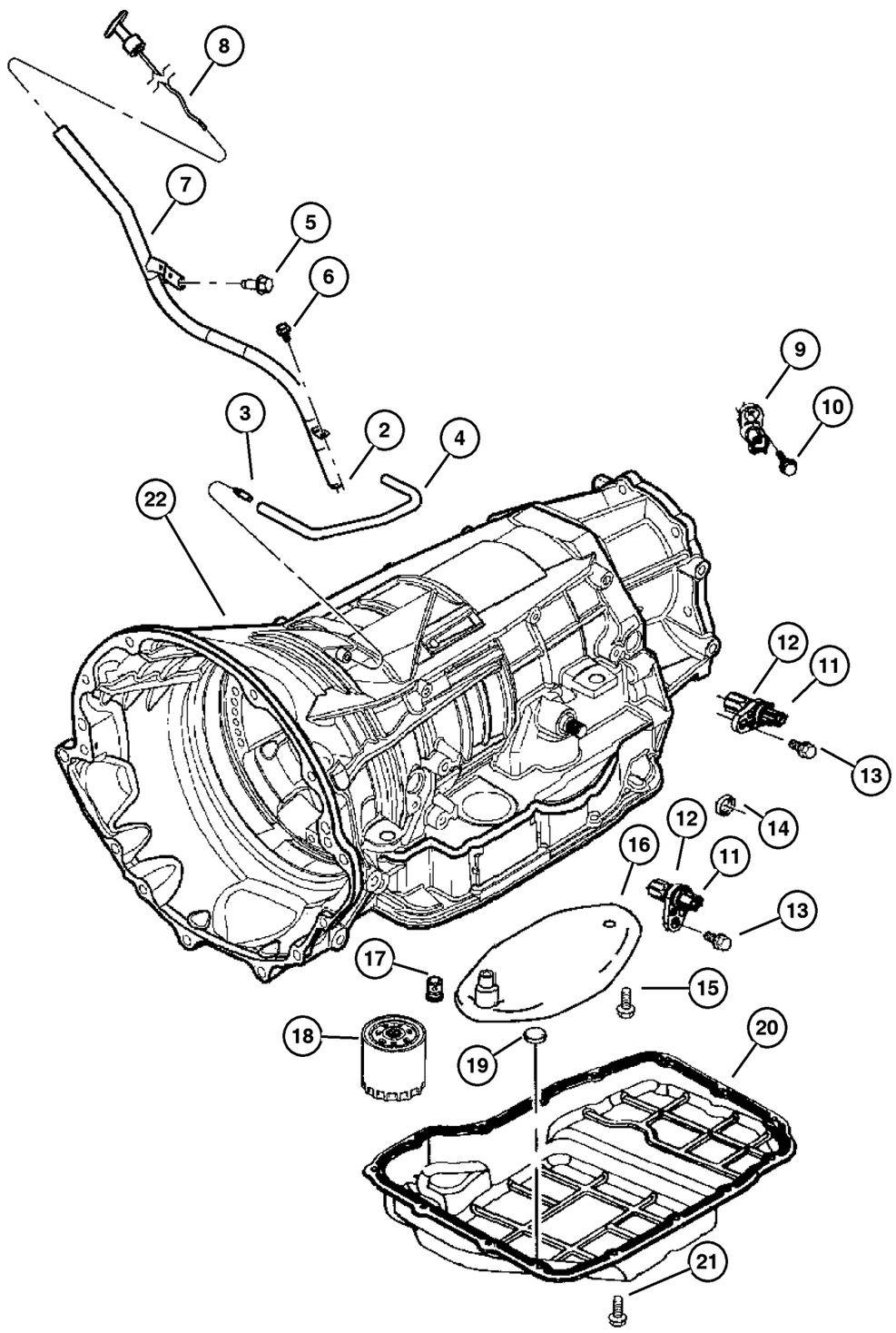

ITEM	PART NUMBER	QTY	LINE	SERIES	BODY	ENGINE	TRANS	TRIM	DESCRIPTION
NOTE:									
Sales Codes:									
[DGQ]=5 Speed Automatic Transmission - [5-45RFE]									
[EN0]=All 4/5 Cyl. Turbo Diesel Engines									
-1	5014 221AJ-	1	J, U			EN0	DGQ		OVERHAUL PACKAGE, Transmission
2	4810 021	1	J, U			EN0	DGQ		GROMMET
3	4799 861AB	1	J, U			EN0	DGQ		VENT, Transmission
4	53032 457AA	1					DGQ		TUBE, Vent
5	6022 266	1	J, U			EN0	DGQ		SCREW, Hex Head, .375-16x1.5
6	6501 979	1					DG0		SCREW AND WASHER, Hex Head, M6x1x17
7	53013 497AC	1				EN0	DG0		TUBE, Transmission Oil Filler
8	53013 719AA	1					DGQ		INDICATOR, Transmission Fluid Level
9	4799 758	1	J, U			EN0	DGQ		TRANSDUCER, Pressure Sensor, Line Pressure
10	6101 331	1	J, U			EN0	DGQ		BOLT, M6x1.00x20, Line Pressure Sensor
11	4799 061AB	2	J, U			EN0	DGQ		SENSOR, Transmission Input Speed
12	4799 062	2	J, U			EN0	DGQ		O RING
13	6101 331	2	J, U			EN0	DGQ		BOLT, M6x1.00x20
14	4799 346	1	J, U			EN0	DGQ		SEAL, Manual Lever Shaft
15	6503 232	1	J, U			EN0	DGQ		SCREW, Pan Head, M5 x 0.8 x 12. 60, Oil Filter To Transfer Plate
16	5013 470AC	1	J, U			EN0	DGQ		FILTER PACKAGE, Transmission Oil
17	4799 681	1	J, U			EN0	DGQ		VALVE, Flow Control
18	4799 662AB	1	J, U			EN0	DGQ		FILTER, Transmission Oil
19	4446 728	1	J, U			EN0	DGQ		MAGNET, Transmission
20	5013 681AA	1	J, U			EN0	DGQ		PAN, Transmission Oil
21	6101 221	15	J, U			EN0	DGQ		SCREW AND WASHER, Hex Head, M6x1x12
22	4799 613AB	1	J, U			EN0	DGQ		CASE, Transmission

2006 Liberty (KJ)

SERIES	LINE	BODY	ENGINE	TRANSMISSION
H =HIGHLINE	T =JEEP - 2WD	74 =SPORT UTILITY 4-DR	EKG=3.7L V6 Eng.	DG6=4-Spd. Auto. 42RLE Trans.
M =MEDIUM	J =JEEP - 4WD		ENR=2.8L 4 Cyl Turbo Diesel Eng.	DGV=4-Spd. Auto. VLP Trans.
P =PREMIUM	U =JEEP - 4WD (RHD)		ENJ=2.5L 4 Cyl 16V Turbo Diesel Eng.	DGQ=5-Spd Auto. 5-45RFE Trans.
			ED1=2.4L 4 Cyl DOHC 16v SMPI Eng.	DEH=6-Speed Man. NSG370 Trans.
				DDD=5-Speed HD Man. Trans.
				DDK=5-Speed HD Man. Trans.

Pump, Oil [DGQ]
Figure 5-45RFE-310

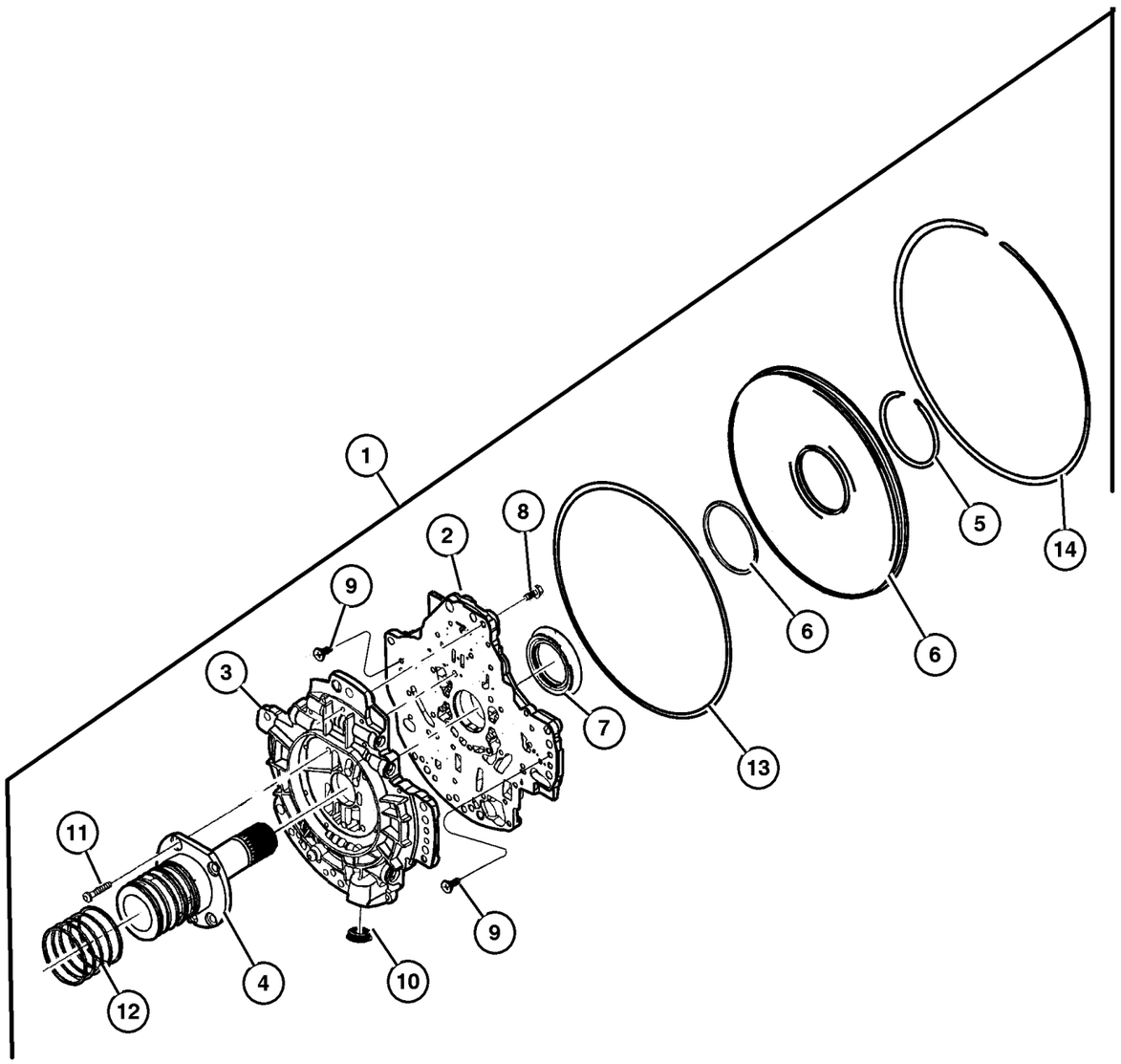

ITEM	PART NUMBER	QTY	LINE	SERIES	BODY	ENGINE	TRANS	TRIM	DESCRIPTION
NOTE:									
Sales Codes:									
[DGQ]=5 Speed Automatic Transmission - [5-45RFE]									
[EN0]=All 4 Cylinder Turbo Diesel Engines									
1	5073 004AD	1	J, U			EN0	DGQ		PUMP PACKAGE, Transmission
2									HOUSING, Pump, (NOT SERVICED) (Not Serviced)
3									BODY, Oil Pump Valve, (NOT SERVICED) (Not Serviced)
4									SUPPORT, Reaction Shaft, (NOT SERVICED) (Not Serviced)
5	4799 082	1	J, U			EN0	DGQ		SNAP RING, Transmission
6	4799 609	1	J, U			EN0	DGQ		COVER, Oil Pump
7	4617 919	1	J, U			EN0	DGQ		SEAL, Transmission Oil Pump
8	6500 215	24	T				DG6		SCREW AND WASHER, Pan Head, M5x.8x25
9	6503 232	1	J, U			EN0	DGQ		SCREW, Pan Head, M5 x 0.8 x 12. 60
10	4799 964AB	1	J, U			EN0	DGQ		SEAL, Oil Pump
11	6504 661	5	J, U			EN0	DGQ		SCREW, Button Head
12	4799 056	5	J, U			EN0	DGQ		RING, Transmission
13	4799 003	1	J, U			EN0	DGQ		O RING, Oil Pump, .
14	4799 005	1	J, U			EN0	DGQ		SNAP RING, Transmission
-15	4736 547	1	J, U			EN0	DGQ		SEAL, Torque Converter Hub

2006 Liberty (KJ)

SERIES	LINE	BODY	ENGINE	TRANSMISSION
H =HIGHLINE	T =JEEP - 2WD	74 =SPORT UTILITY 4-DR	EKG=3.7L V6 Eng.	DG6=4-Spd. Auto. 42RLE Trans.
M =MEDIUM	J =JEEP - 4WD		ENR=2.8L 4 Cyl Turbo Diesel Eng.	DGV=4-Spd. Auto. VLP Trans.
P =PREMIUM	U =JEEP - 4WD (RHD)		ENJ=2.5L 4 Cyl 16V Turbo Diesel Eng.	DGQ=5-Spd Auto. 5-45RFE Trans.
			ED1=2.4L 4 Cyl DOHC 16v SMPI Eng.	DEH=6-Speed Man. NSG370 Trans.
				DDD=5-Speed HD Man. Trans.
				DDK=5-Speed HD Man. Trans.

Input Shaft [DGQ]
Figure 5-45RFE-410

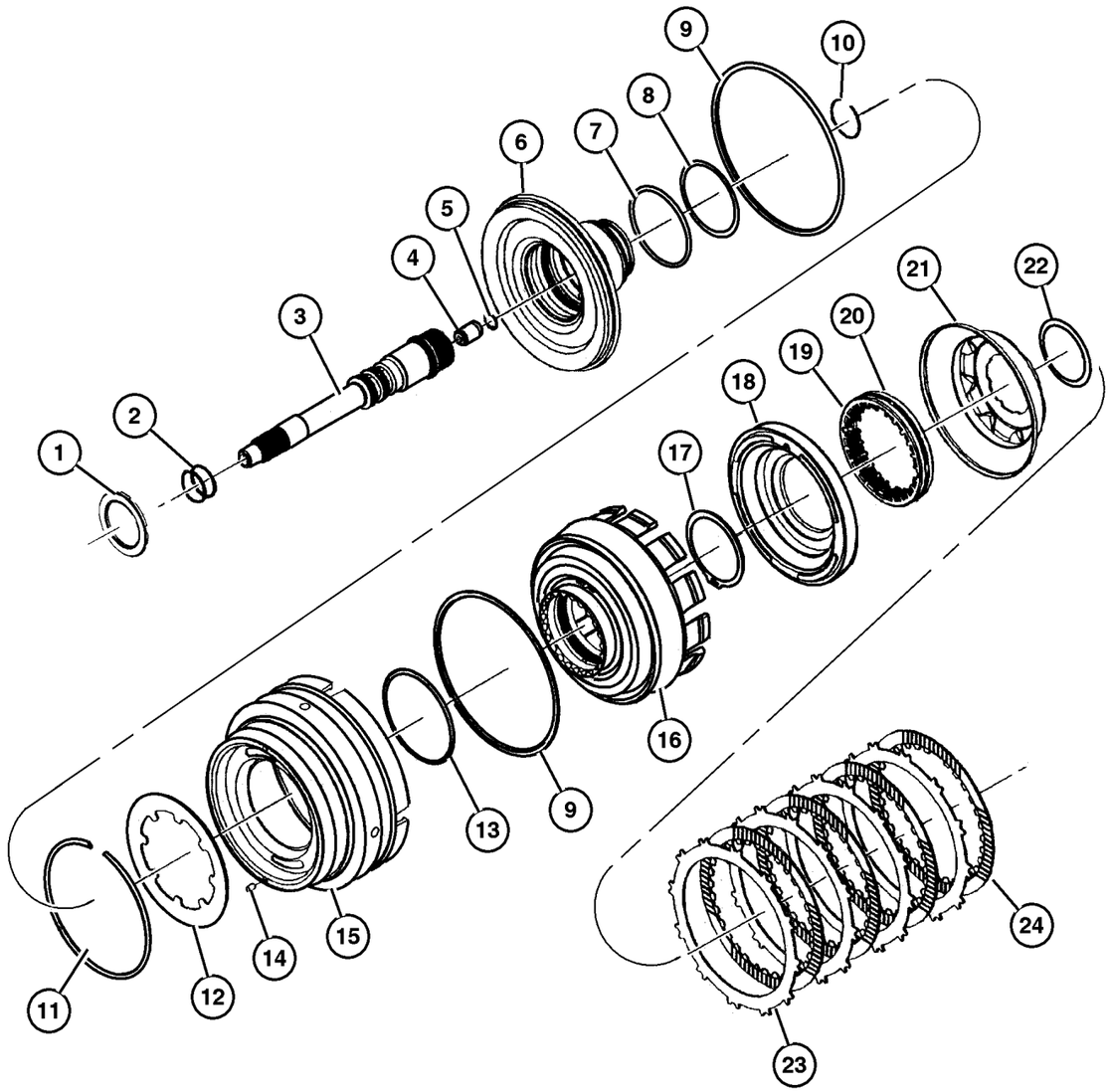

ITEM	PART NUMBER	QTY	LINE	SERIES	BODY	ENGINE	TRANS	TRIM	DESCRIPTION
NOTE:									
Sales Codes:									
[DGQ]=5 Speed Automatic Transmission - [5-45RFE]									
[EN0]=All 4/5 Cylinder Turbo Diesel Engines									
1	4799 469	1	J, U			EN0	DGQ		THRUST BEARING, Needle Roller
2	4799 539	2	J, U			EN0	DGQ		SEAL, Input Shaft, PKG 05013090AA
3	5114 582AA	1	J, U			EN0	DGQ		SHAFT, Input
4	4799 974AA	1	J, U			EN0	DGQ		CHECK VALVE, Transmission
5	4799 978AA	1	J, U			EN0	DGQ		SNAP RING
6	4799 536AC	1	J, U			EN0	DGQ		HUB, Input Clutch
7	4799 073	1	J, U			EN0	DGQ		O RING, Transmission Clutch, PKG 05013090AA
8									O RING, Transmission Clutch, PKG 05013090AA
	4799 073	1	J, U			EN0	DGQ		Input Clutch Large
	4799 755	1	J, U			EN0	DGQ		Input Clutch Small
9	4799 090	1	J, U			EN0	DGQ		SEAL, Input, PKG 05013090AA
10	4799 538	1	J, U			EN0	DGQ		SNAP RING, Input Shaft
11	4799 088	1	J, U			EN0	DGQ		SNAP RING, Transmission
12	4799 087	1	J, U			EN0	DGQ		SPRING, Piston Return
13	4799 089	1	J, U			EN0	DGQ		O RING, Reverse & O/Drive Clutch Piston, Transmission, PKG 05013090AA
14	4531 903	1	J, U			EN0	DGQ		FILTER, Reverse And O/D Clutch
15	5073 525AA	1	J, U			EN0	DGQ		PISTON, Reverse and Overdrive
16	4799 648	1	J, U			EN0	DGQ		RETAINER, Transmission Input Clutch
17	4799 247	1	J, U			EN0	DGQ		SNAP RING
18	4799 650	1	J, U			EN0	DGQ		PISTON, Underdrive
19	4746 155	1	J, U						BEARING, Input Gear
20	4799 101	1	J, U			EN0	DGQ		SPRING, Undredrive Piston, PKG 05013090AA
21	4799 652	1	J, U			EN0	DGQ		PISTON, Underdrive
22	4799 103	1	J, U			EN0	DGQ		SNAP RING, Transmission, PKG 05013090AA
23									PLATE, PKG 05013090AA, (NOT SERVICED) (Not Serviced)
24									DISC, Clutch, PKG 05013090AA, (NOT SERVICED) (Not Serviced)
-25	4799 097	1	J, U			EN0	DGQ		SNAP RING

2006 Liberty (KJ)

SERIES	LINE	BODY	ENGINE	TRANSMISSION
H =HIGHLINE	T =JEEP - 2WD	74 =SPORT UTILITY 4-DR	EKG=3.7L V6 Eng.	DG6=4-Spd. Auto. 42RLE Trans.
M =MEDIUM	J =JEEP - 4WD		ENR=2.8L 4 Cyl Turbo Diesel Eng.	DGV=4-Spd. Auto. VLP Trans.
P =PREMIUM	U =JEEP - 4WD (RHD)		ENJ=2.5L 4 Cyl 16V Turbo Diesel Eng.	DGQ=5-Spd Auto. 5-45RFE Trans.
			ED1=2.4L 4 Cyl DOHC 16v SMPI Eng.	DEH=6-Speed Man. NSG370 Trans.
				DDD=5-Speed HD Man. Trans.
				DDK=5-Speed HD Man. Trans.

Underdrive [DGQ]
Figure 5-45RFE-420

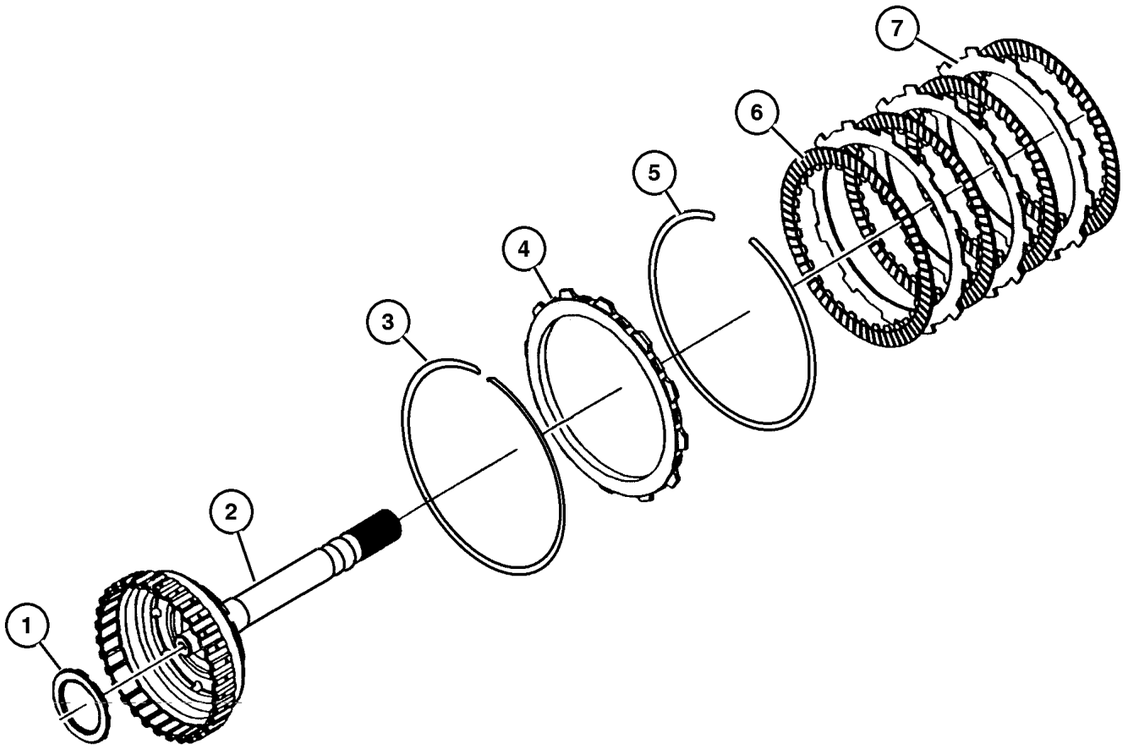

ITEM	PART NUMBER	QTY	LINE	SERIES	BODY	ENGINE	TRANS	TRIM	DESCRIPTION
NOTE:									
Sales Codes:									
[DGQ]=5 Speed Automatic Transmission - [5-45RFE]									
[EN0]=All 4/5 Cylinder Turbo Diesel Engines									
1	4799 469	1	J, U			EN0	DGQ		THRUST BEARING, Needle Roller
2	5127 485AA	AR	J, U			EN0	DGQ		HUB AND SHAFT, Underdrive Clutch
3	4799 760	1	J, U			EN0	DGQ		SNAP RING, Transmission
4	4799 108AD	AR	J, U			EN0	DGQ		PLATE, Transmission Clutch Reaction
5									SNAP RING, Serviced In Pkg. (05013090AA), (NOT SERVICED) (Not Serviced)
6									DISC, Clutch, Serviced In Pkg. (05013090AA), (NOT SERVICED) (Not Serviced)
7									PLATE, Serviced In Pkg. (05013090AA), (NOT SERVICED) (Not Serviced)
-8	4799 667	1	J, U			EN0	DGQ		PLATE, Transmission Clutch Reaction
-9	4799 687AB-	1	J, U			EN0	DGQ		PLATE, Transmission Clutch Reaction

2006 Liberty (KJ)

SERIES	LINE	BODY	ENGINE	TRANSMISSION
H =HIGHLINE	T =JEEP - 2WD	74 =SPORT UTILITY 4-DR	EKG=3.7L V6 Eng.	DG6=4-Spd. Auto. 42RLE Trans.
M =MEDIUM	J =JEEP - 4WD		ENR=2.8L 4 Cyl Turbo Diesel Eng.	DGV=4-Spd. Auto. VLP Trans.
P =PREMIUM	U =JEEP - 4WD (RHD)		ENJ=2.5L 4 Cyl 16V Turbo Diesel Eng.	DGQ=5-Spd Auto. 5-45RFE Trans.
			ED1=2.4L 4 Cyl DOHC 16v SMPI Eng.	DEH=6-Speed Man. NSG370 Trans.
				DDD=5-Speed HD Man. Trans.
				DDK=5-Speed HD Man. Trans.

Overdrive [DGQ]
Figure 5-45RFE-430

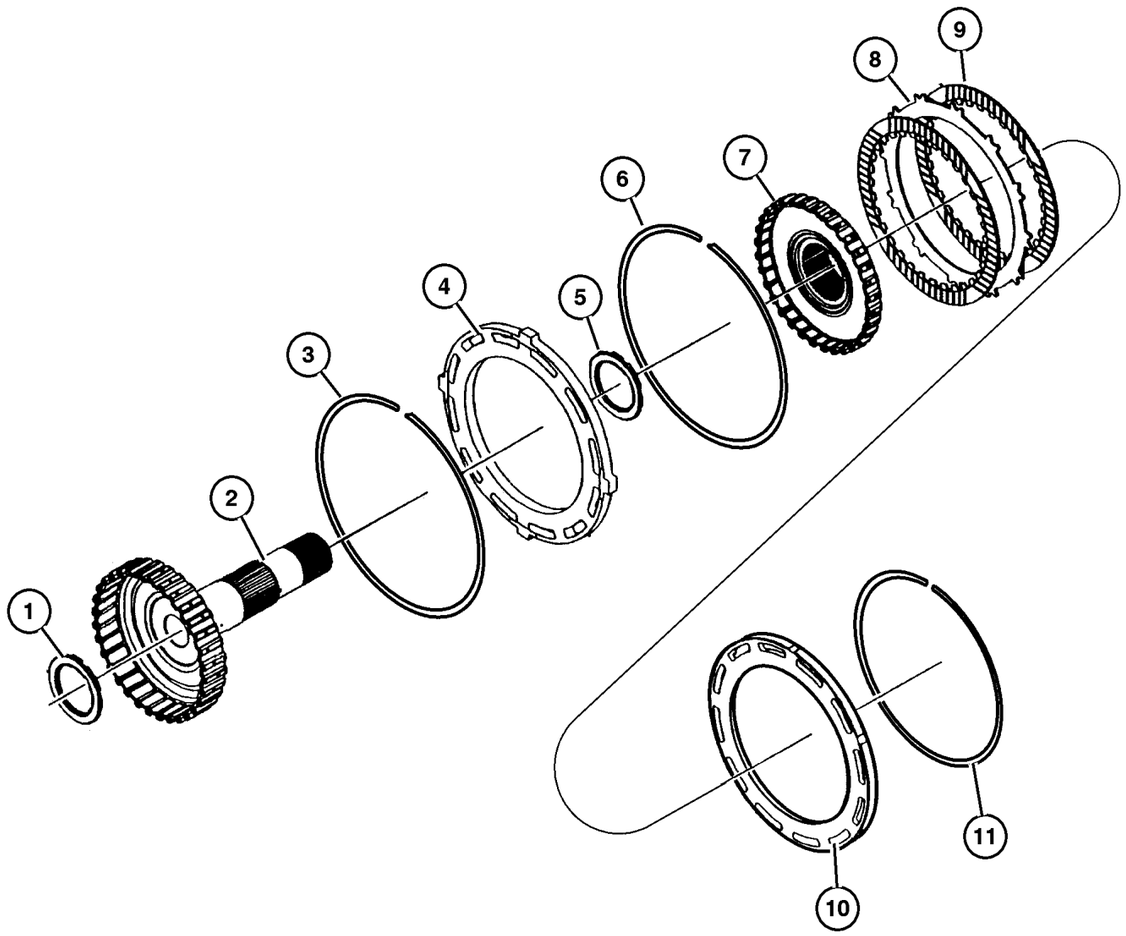

ITEM	PART NUMBER	QTY	LINE	SERIES	BODY	ENGINE	TRANS	TRIM	DESCRIPTION
NOTE:									
Sales Codes:									
[DGQ]=5 Speed Automatic Transmission - [5-45RFE]									
[EN0]=All 4/5 Cylinder Turbo Diesel Engines									
1	4799 469	1	J, U			EN0	DGQ		THRUST BEARING, Needle Roller
2	4799 550	1	J, U			EN0	DGQ		HUB AND SHAFT, Overdrive Clutch
3	4799 118	1	J, U			EN0	DGQ		SNAP RING, Overdrive Clutch
4	4799 116AB	1	J, U			EN0	DGQ		PLATE, Clutch Pressure
5	4799 469	1	J, U			EN0	DGQ		THRUST BEARING, Needle Roller
6	4799 117	1	J, U			EN0	DGQ		SNAP RING, Transmission
7	4799 556	1	J, U			EN0	DGQ		HUB AND SHAFT, Reverse Clutch
8									PLATE, PKG 05013090AA, (NOT SERVICED) (Not Serviced)
9									DISC, Clutch, PKG 05013090AA, (NOT SERVICED) (Not Serviced)
10	4799 121	1	J, U			EN0	DGQ		PLATE, Transmission Clutch Reaction
11									SNAP RING, PKG 05013090AA, (NOT SERVICED) (Not Serviced)

2006 Liberty (KJ)

SERIES	LINE	BODY	ENGINE	TRANSMISSION
H =HIGHLINE	T =JEEP - 2WD	74 =SPORT UTILITY 4-DR	EKG=3.7L V6 Eng.	DG6=4-Spd. Auto. 42RLE Trans.
M =MEDIUM	J =JEEP - 4WD		ENR=2.8L 4 Cyl Turbo Diesel Eng.	DGV=4-Spd. Auto. VLP Trans.
P =PREMIUM	U =JEEP - 4WD (RHD)		ENJ=2.5L 4 Cyl 16V Turbo Diesel Eng.	DGQ=5-Spd Auto. 5-45RFE Trans.
			ED1=2.4L 4 Cyl DOHC 16v SMPI Eng.	DEH=6-Speed Man. NSG370 Trans.
				DDD=5-Speed HD Man. Trans.
				DDK=5-Speed HD Man. Trans.

2 / 4 Clutch Retainer [DGQ]
Figure 5-45RFE-440

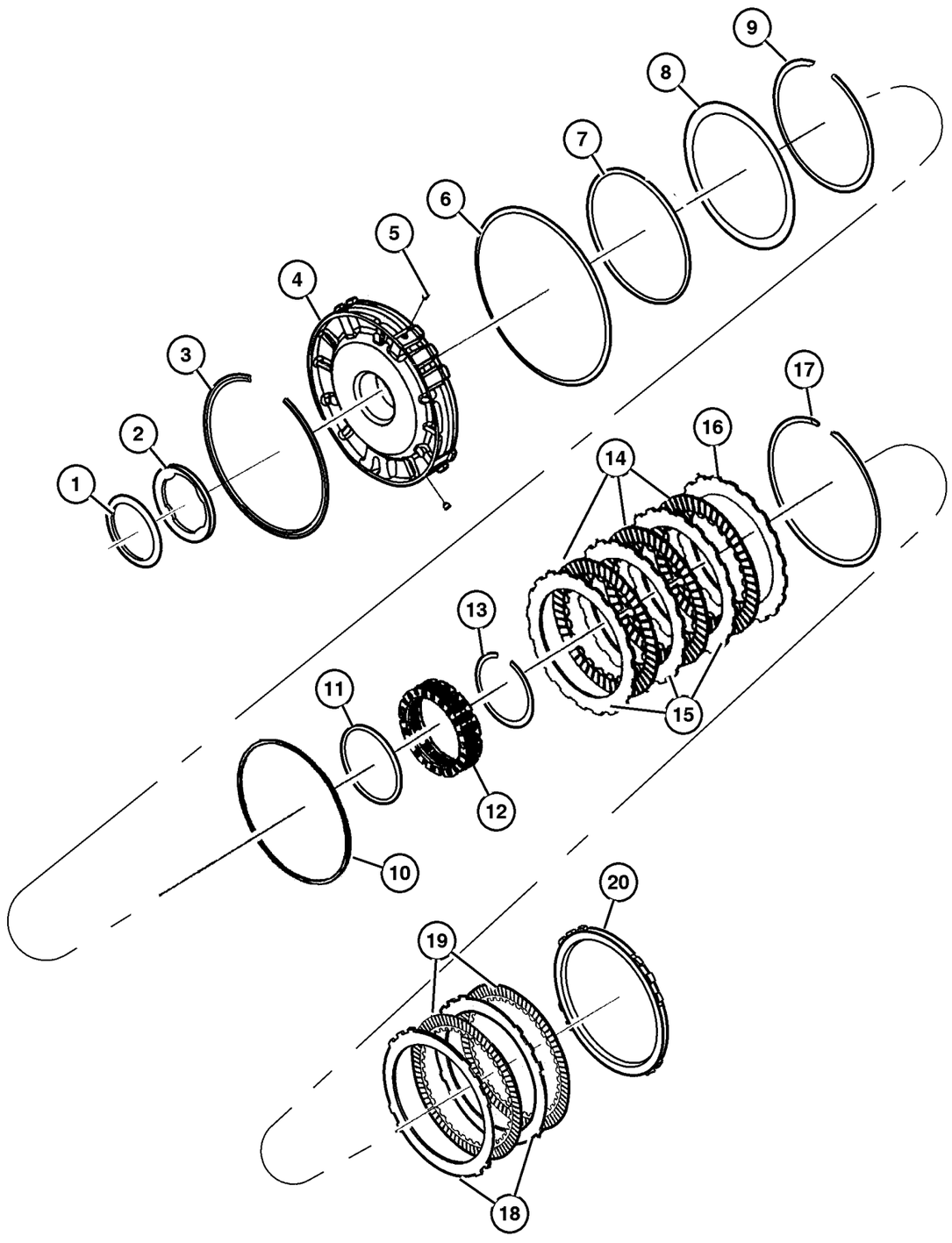

ITEM	PART NUMBER	QTY	LINE	SERIES	BODY	ENGINE	TRANS	TRIM	DESCRIPTION
NOTE:									
Sales Codes:									
[DGQ]=5 Speed Automatic Transmission - [5-45RFE]									
[EN0]=All 4/5 Cylinder Turbo Diesel Engines									
1	4799 936AB	1	J, U			EN0	DGQ		THRUST BEARING, Needle Roller
2									PLATE, Clutch Hub Thrust, PKG 05013093AB, (NOT SERVICED) (Not Serviced)
3	4799 680AB	1	J, U			EN0	DGQ		SNAP RING, Transmission
4	4799 498AC	1	J, U			EN0	DGQ		RETAINER, Transmission 2nd and 4th Clutch Piston
5	4799 086	1	J, U			EN0	DGQ		BLEED ORIFICE, Transmission
6	4799 174	1	J, U			EN0	DGQ		SNAP RING, Transmission
7									RING, PKG 05013093AB, (NOT SERVICED) (Not Serviced)
8	4799 521	1	J, U			EN0	DGQ		SPRING, 2nd And 4th Clutch Piston
9	4799 522AB	1	J, U			EN0	DGQ		SNAP RING, Transmission
10									RING, PKG 05013093AB, (NOT SERVICED) (Not Serviced)
11									RING, PKG 05013093AB, (NOT SERVICED) (Not Serviced)
12	4799 527AB	1	J, U			EN0	DGQ		SPRING, 2nd And 4th Clutch Piston
13	4799 680AB	1	J, U			EN0	DGQ		SNAP RING, Transmission
14									DISC, Clutch, PKG 05013087AA, (NOT SERVICED) (Not Serviced)
15									PLATE, Clutch Separator, PKG 05013087AA, (NOT SERVICED) (Not Serviced)
16	4799 533	1	J, U			EN0	DGQ		PLATE, Transmission Clutch Reaction
17									SNAP RING, Transmission, PKG 05013087AA, (NOT SERVICED) (Not Serviced)
18									PLATE, PKG 05013087AA, (NOT SERVICED) (Not Serviced)
19									DISC, Clutch, PKG 05013087AA, (NOT SERVICED) (Not Serviced)
20	4799 687AB	1	J, U			EN0	DGQ		PLATE, Transmission Clutch Reaction
-21	4799 465	1	J, U			EN0	DGQ		CLUTCH, Overrunning
-22	4799 457AB-	1	J, U			EN0	DGQ		CLUTCH, L/R Clutch
-23	5013 087AC-	1	J, U			EN0	DGQ		CLUTCH PACKAGE, Automatic Transmission, 2/4

2006 Liberty (KJ)

SERIES	LINE	BODY	ENGINE	TRANSMISSION
H =HIGHLINE	T =JEEP - 2WD	74 =SPORT UTILITY 4-DR	EKG=3.7L V6 Eng.	DG6=4-Spd. Auto. 42RLE Trans.
M =MEDIUM	J =JEEP - 4WD		ENR=2.8L 4 Cyl Turbo Diesel Eng.	DGV=4-Spd. Auto. VLP Trans.
P =PREMIUM	U =JEEP - 4WD (RHD)		ENJ=2.5L 4 Cyl 16V Turbo Diesel Eng.	DGQ=5-Spd Auto. 5-45RFE Trans.
			ED1=2.4L 4 Cyl DOHC 16v SMPI Eng.	DEH=6-Speed Man. NSG370 Trans.
				DDD=5-Speed HD Man. Trans.
				DDK=5-Speed HD Man. Trans.

2 / 4 Clutch Retainer [DGQ]
Figure 5-45RFE-440

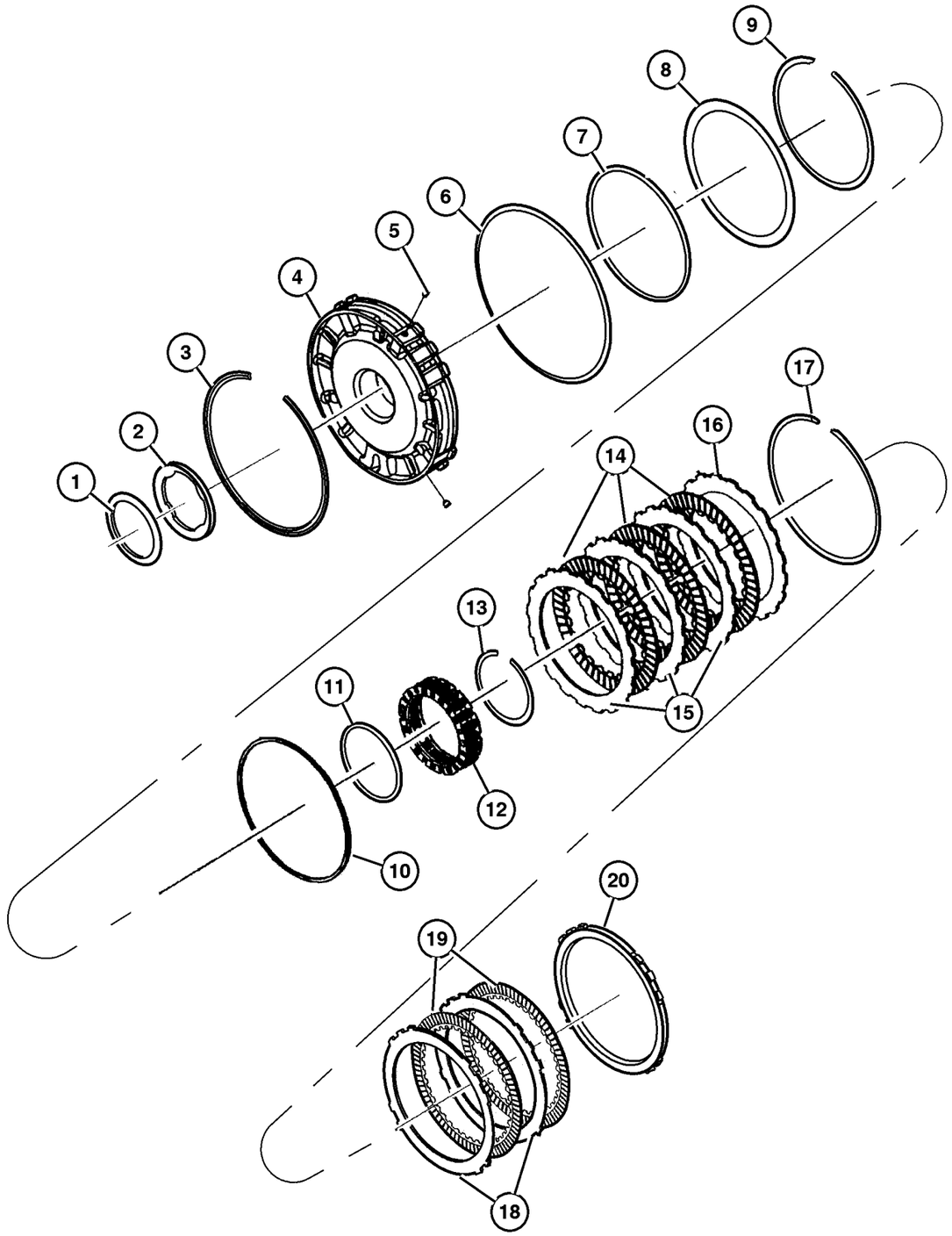

ITEM	PART NUMBER	QTY	LINE	SERIES	BODY	ENGINE	TRANS	TRIM	DESCRIPTION
-24	4799 863AA-	1	J, U			EN0	DGQ		SNAP RING
-25	4799 528AB-	1	J, U			EN0	DGQ		SNAP RING, Transmission
-26	4800 236AA-	1	J, U				DG6		SPRING, Low/Reverse Clutch Piston

2006 Liberty (KJ)

SERIES	LINE	BODY	ENGINE	TRANSMISSION
H =HIGHLINE	T =JEEP - 2WD	74 =SPORT UTILITY 4-DR	EKG=3.7L V6 Eng.	DG6=4-Spd. Auto. 42RLE Trans.
M =MEDIUM	J =JEEP - 4WD		ENR=2.8L 4 Cyl Turbo Diesel Eng.	DGV=4-Spd. Auto. VLP Trans.
P =PREMIUM	U =JEEP - 4WD (RHD)		ENJ=2.5L 4 Cyl 16V Turbo Diesel Eng.	DGQ=5-Spd Auto. 5-45RFE Trans.
			ED1=2.4L 4 Cyl DOHC 16v SMPI Eng.	DEH=6-Speed Man. NSG370 Trans.
				DDD=5-Speed HD Man. Trans.
				DDK=5-Speed HD Man. Trans.

Input / Reverse Planetary [DGQ]
Figure 5-45RFE-450

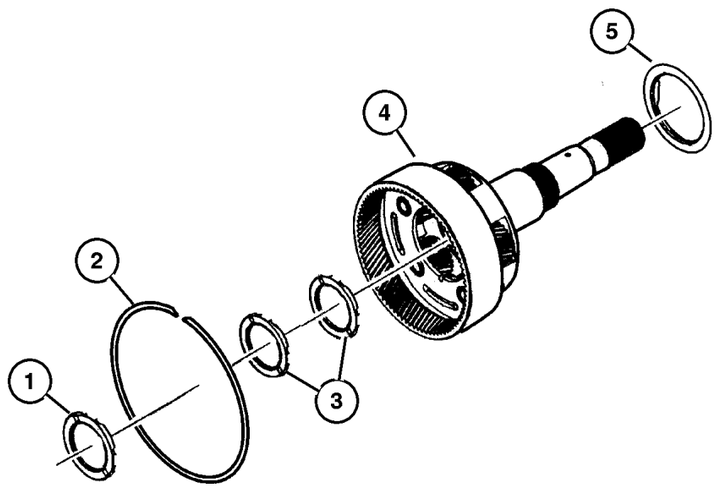

ITEM	PART NUMBER	QTY	LINE	SERIES	BODY	ENGINE	TRANS	TRIM	DESCRIPTION
NOTE:									
Sales Codes:									
[DGQ]=5 Speed Automatic Transmission - [5-45RFE]									
[EN0]=All 4/5 Cylinder Turbo Diesel Engines									
1	4799 469	1	J, U			EN0	DGQ		THRUST BEARING, Needle Roller
2	4799 247	1	J, U			EN0	DGQ		SNAP RING
3	52119 464AA	1	J, U			EN0	DGQ		THRUST BEARING, Needle Roller
4	4799 500AD	1	J, U			EN0	DGQ		CARRIER, Input Complete
5	4799 459	1	J, U			EN0	DGQ		THRUST BEARING, Needle Roller
-6	4799 503AE-	1	J, U			EN0	DGQ		CARRIER, Reverse Complete

2006 Liberty (KJ)

SERIES	LINE	BODY	ENGINE	TRANSMISSION
H =HIGHLINE	T =JEEP - 2WD	74 =SPORT UTILITY 4-DR	EKG=3.7L V6 Eng.	DG6=4-Spd. Auto. 42RLE Trans.
M =MEDIUM	J =JEEP - 4WD		ENR=2.8L 4 Cyl Turbo Diesel Eng.	DGV=4-Spd. Auto. VLP Trans.
P =PREMIUM	U =JEEP - 4WD (RHD)		ENJ=2.5L 4 Cyl 16V Turbo Diesel Eng.	DGQ=5-Spd Auto. 5-45RFE Trans.
			ED1=2.4L 4 Cyl DOHC 16v SMPI Eng.	DEH=6-Speed Man. NSG370 Trans.
				DDD=5-Speed HD Man. Trans.
				DDK=5-Speed HD Man. Trans.

Reaction Annulus / Sun Gear [DGQ]
Figure 5-45RFE-460

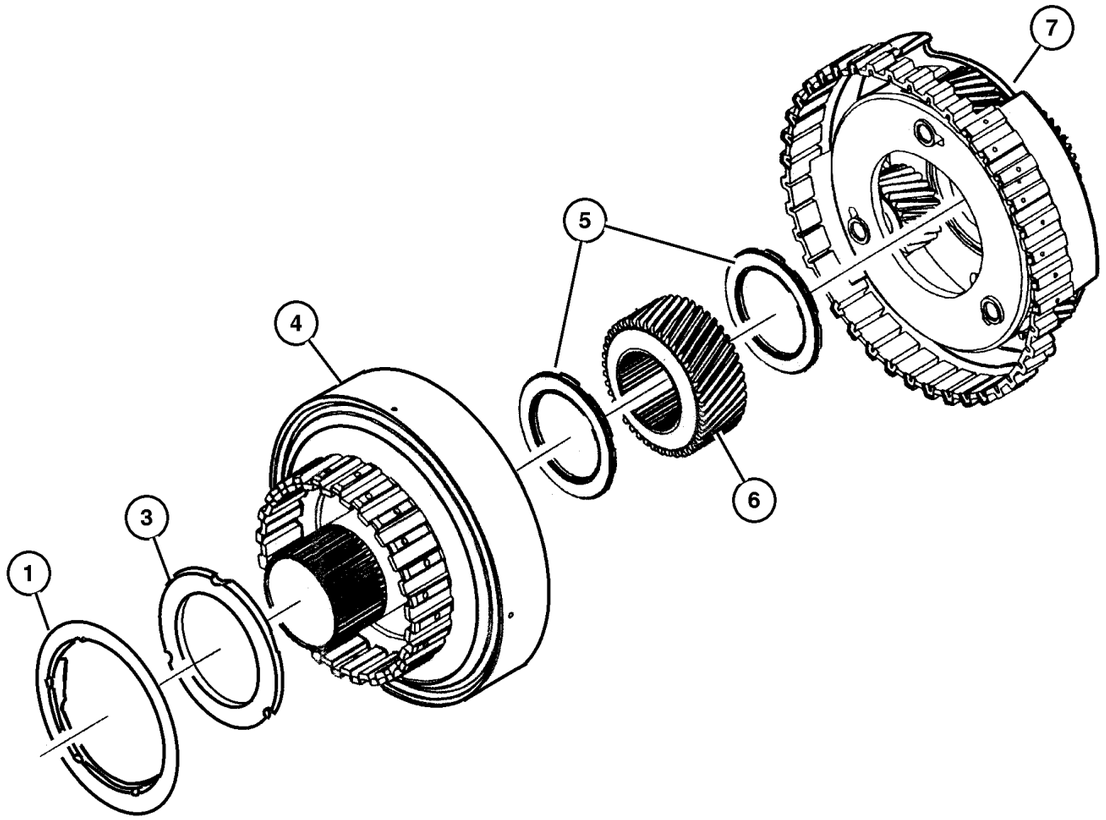

ITEM	PART NUMBER	QTY	LINE	SERIES	BODY	ENGINE	TRANS	TRIM	DESCRIPTION
NOTE:									
Sales Codes:									
[DGQ]=5 Speed Automatic Transmission - [5-45RFE]									
[EN0]=All 4/5 Cylinder Turbo Diesel Engines									
1	4799 459	1	J, U			EN0	DGQ		THRUST BEARING, Needle Roller
-2	52119 464AA-	1	J, U			EN0	DGQ		THRUST BEARING, Needle Roller
3									THRUST WASHER, Planetary Carrier, PKG 05013092AA, (NOT SERVICED) (Not Serviced)
4	4799 501	1	J, U			EN0	DGQ		GEAR, Annulus
5	4799 469	1	J, U			EN0	DGQ		THRUST BEARING, Needle Roller
6	4799 602	1	J, U			EN0	DGQ		GEAR, Reaction Sun
7	4799 619AB	1	J, U			EN0	DGQ		CARRIER, Reaction Complete
-8	4799 586AB-	1	J, U			EN0	DGQ		GEAR, Input Sun

2006 Liberty (KJ)

SERIES	LINE	BODY	ENGINE	TRANSMISSION
H =HIGHLINE	T =JEEP - 2WD	74 =SPORT UTILITY 4-DR	EKG=3.7L V6 Eng.	DG6=4-Spd. Auto. 42RLE Trans.
M =MEDIUM	J =JEEP - 4WD		ENR=2.8L 4 Cyl Turbo Diesel Eng.	DGV=4-Spd. Auto. VLP Trans.
P =PREMIUM	U =JEEP - 4WD (RHD)		ENJ=2.5L 4 Cyl 16V Turbo Diesel Eng.	DGQ=5-Spd Auto. 5-45RFE Trans.
			ED1=2.4L 4 Cyl DOHC 16v SMPI Eng.	DEH=6-Speed Man. NSG370 Trans.
				DDD=5-Speed HD Man. Trans.
				DDK=5-Speed HD Man. Trans.

Low / Reverse Clutch [DGQ]
Figure 5-45RFE-470

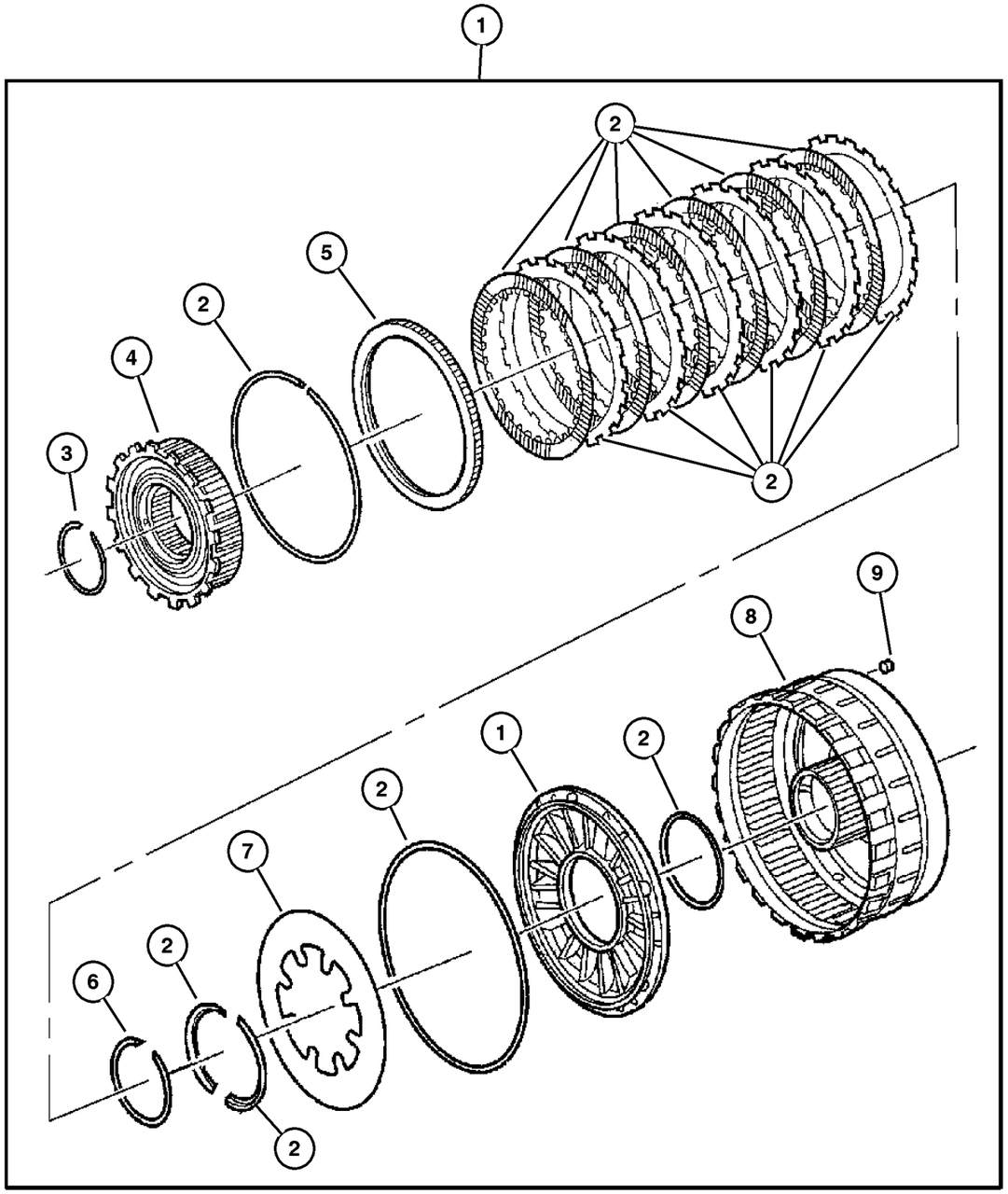

ITEM	PART NUMBER	QTY	LINE	SERIES	BODY	ENGINE	TRANS	TRIM	DESCRIPTION
NOTE:									
Sales Codes:									
[DGQ]=5 Speed Automatic Transmission - [5-45RFE]									
[EN0]=All 4/5 Cylinder Turbo Diesel Engines									
1	4799 457AB	1	J, U			EN0	DGQ		CLUTCH, L/R Clutch
2	5073 003AA	1	J, U			EN0	DGQ		CLUTCH PACKAGE, Automatic Transmission, Low/Reverse
3	4799 863AA	1	J, U			EN0	DGQ		SNAP RING
4	4799 465	1	J, U			EN0	DGQ		CLUTCH, Overrunning
5	4799 667	1	J, U			EN0	DGQ		PLATE, Transmission Clutch Reaction
6	4799 863AA	1	J, U			EN0	DGQ		SNAP RING
7	4799 863AA	1	J, U			EN0	DGQ		SNAP RING
8	5073 003AA	1	J, U			EN0	DGQ		CLUTCH PACKAGE, Automatic Transmission, Low/Reverse
9	4799 086	1	J, U			EN0	DGQ		BLEED ORIFICE, Transmission
-10	4799 466	1	J, U			EN0	DGQ		SNAP RING, Transmission

2006 Liberty (KJ)

SERIES	LINE	BODY	ENGINE	TRANSMISSION
H =HIGHLINE	T =JEEP - 2WD	74 =SPORT UTILITY 4-DR	EKG=3.7L V6 Eng.	DG6=4-Spd. Auto. 42RLE Trans.
M =MEDIUM	J =JEEP - 4WD		ENR=2.8L 4 Cyl Turbo Diesel Eng.	DGV=4-Spd. Auto. VLP Trans.
P =PREMIUM	U =JEEP - 4WD (RHD)		ENJ=2.5L 4 Cyl 16V Turbo Diesel Eng.	DGQ=5-Spd Auto. 5-45RFE Trans.
			ED1=2.4L 4 Cyl DOHC 16v SMPI Eng.	DEH=6-Speed Man. NSG370 Trans.
				DDD=5-Speed HD Man. Trans.
				DDK=5-Speed HD Man. Trans.

Valve Body [DGQ]
Figure 5-45RFE-710

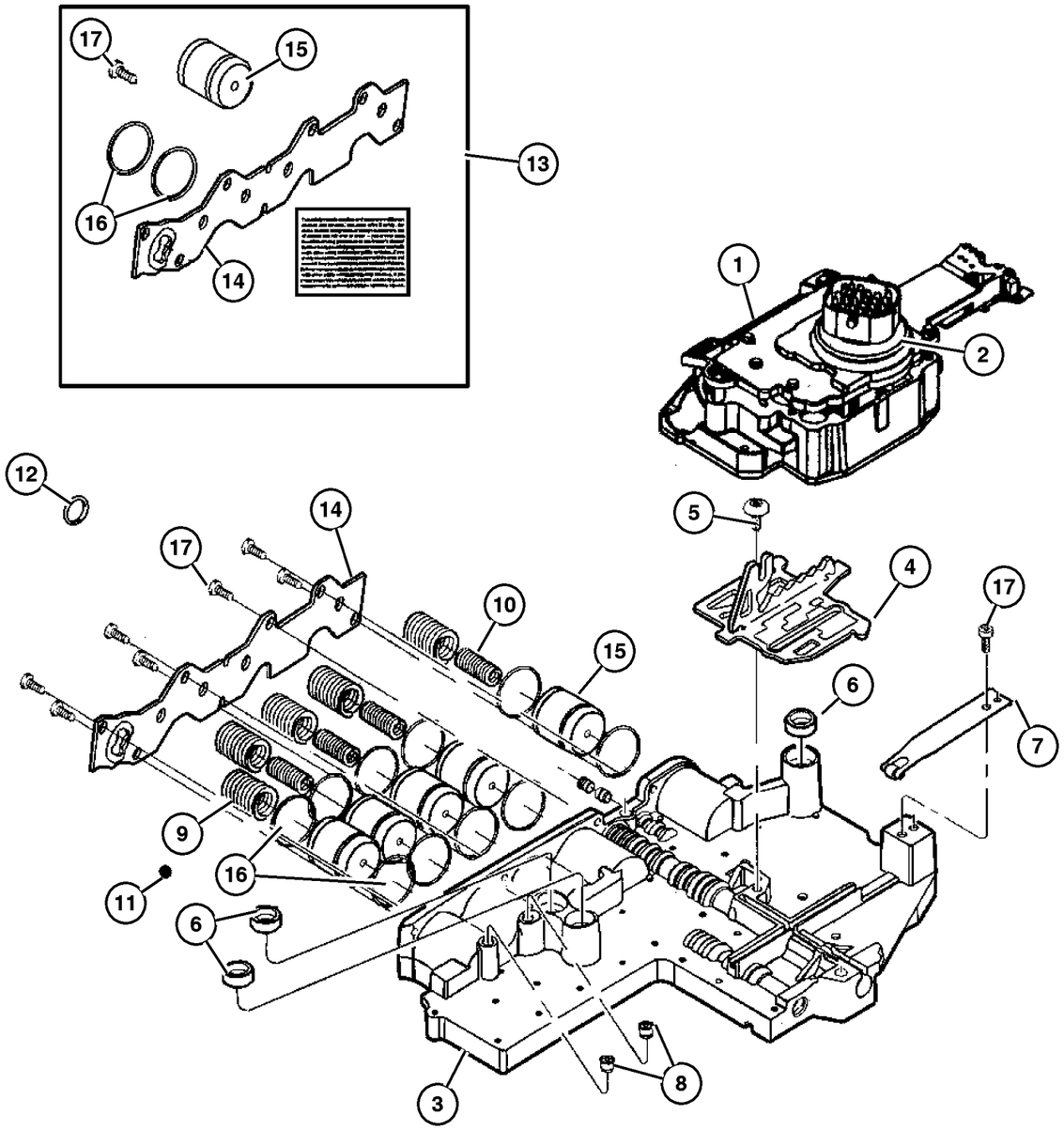

ITEM	PART NUMBER	QTY	LINE	SERIES	BODY	ENGINE	TRANS	TRIM	DESCRIPTION
NOTE:									
Sales Codes:									
[DGQ]=5 Speed Automatic Transmission - [5-45RFE]									
[EN0]=All 4/5 Cylinder Turbo Diesel Engines									
1	5170 877AA	1	J, U			EN0	DGQ		SOLENOID PACKAGE, Valve Body
2									SEAL, Manual Valve Position Sensor, Serviced With # 1, (NOT SERVICED) (Not Serviced)
3	52119 450AB	1	J, U			EN0	DGQ		VALVE BODY, Transfer Plate and Valve
4	4799 654AC	1	J, U			EN0	DGQ		PLATE, Manual Valve Cam
5	6508 087AA	1	J, U			EN0	DGQ		SCREW, Shoulder/Truss, M5x. 8x12.5
6	4799 778	3	J, U			EN0	DGQ		SEAL, Clutch Feed
7	52119 501AA	1	J, U			EN0	DGQ		DETENT, Valve Body
8	4799 086	1	J, U			EN0	DGQ		BLEED ORIFICE, Transmission
9	4471 880	5	J, U			EN0	DGQ		SPRING, Accumulator
10	4567 575	4	J, U			EN0	DGQ		SPRING, Accumulator
11	0147 482	2	J, U				DG6		BALL, Check
12	6505 335AA	1	J, U			EN0	DGQ		O RING, Control Valve
13	5174 633AA	1	J, U			EN0	DGQ		ACCUMULATOR KIT, Accumulator Cover
14	4799 598AB	1	J, U			EN0	DGQ		COVER, Accumulator
15	4446 620AC	5	J, U			EN0	DGQ		PISTON, 2nd and 4th Accumulator
16	4446 544	5	J, U			EN0	DGQ		SEAL, Accumulator
17	6503 232	1	J, U			EN0	DGQ		SCREW, Pan Head, M5 x 0.8 x 12. 60

2006 Liberty (KJ)

SERIES	LINE	BODY	ENGINE	TRANSMISSION
H =HIGHLINE	T =JEEP - 2WD	74 =SPORT UTILITY 4-DR	EKG=3.7L V6 Eng.	DG6=4-Spd. Auto. 42RLE Trans.
M =MEDIUM	J =JEEP - 4WD		ENR=2.8L 4 Cyl Turbo Diesel Eng.	DGV=4-Spd. Auto. VLP Trans.
P =PREMIUM	U =JEEP - 4WD (RHD)		ENJ=2.5L 4 Cyl 16V Turbo Diesel Eng.	DGQ=5-Spd Auto. 5-45RFE Trans.
			ED1=2.4L 4 Cyl DOHC 16v SMPI Eng.	DEH=6-Speed Man. NSG370 Trans.
				DDD=5-Speed HD Man. Trans.
				DDK=5-Speed HD Man. Trans.

Parking Sprag [DGQ]
Figure 5-45RFE-720

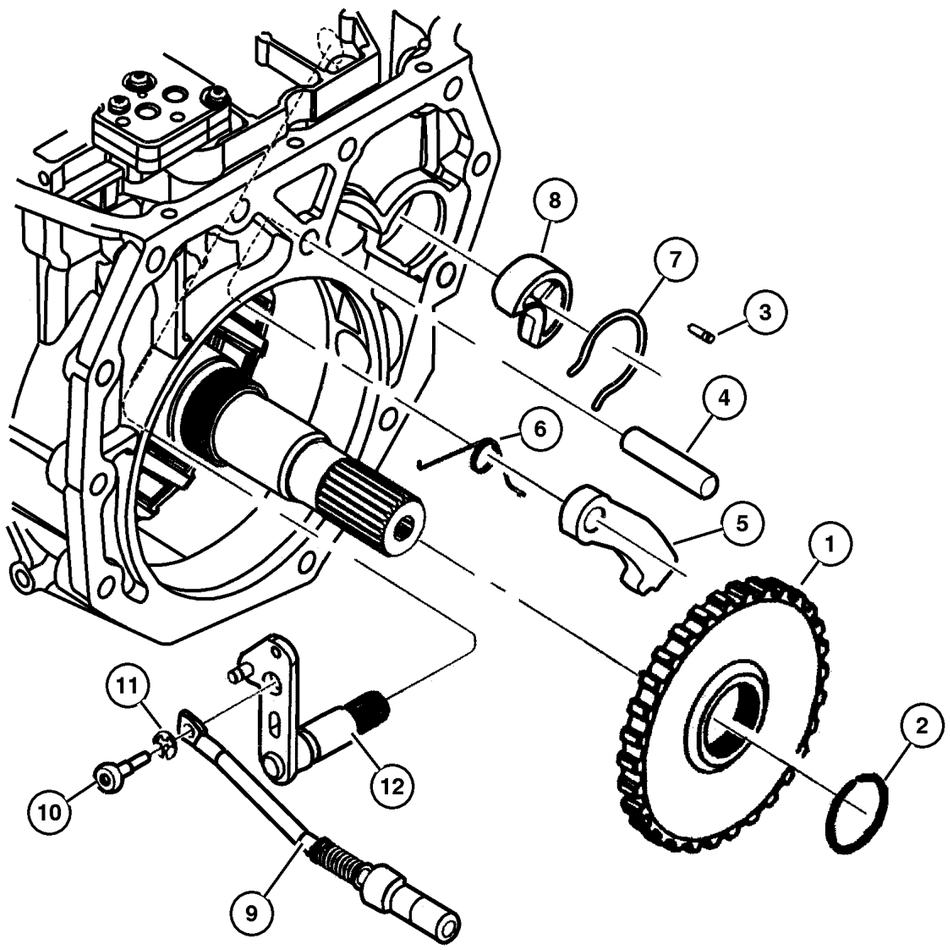

ITEM	PART NUMBER	QTY	LINE	SERIES	BODY	ENGINE	TRANS	TRIM	DESCRIPTION
NOTE:									
Sales Codes:									
[DGQ]=5 Speed Automatic Transmission - [5-45RFE]									
[EN0]=All 4/5 Cylinder Turbo Diesel Engines									
1	4799 493AB	1	J, U			EN0	DGQ		SPRAG, Transmission Parking
2	4799 704	1	J, U			EN0	DGQ		SNAP RING, Transmission
3	0456 636	1	J, U			EN0	DGQ		PIN
4	4799 450	1	J, U			EN0	DGQ		SHAFT, Parking Pawl
5	5166 452AA	1	J, U			EN0	DGQ		PAWL AND ROD KIT
6	4799 451	1	J, U			EN0	DGQ		SPRING, Torsion
7	4799 313	1	J, U			EN0	DGQ		SNAP RING
8	4799 774	1	J, U			EN0	DGQ		GUIDE, Parking Sprag Pawl
9	5166 452AA	1	J, U			EN0	DGQ		PAWL AND ROD KIT
10	6504 548	1	J, U			EN0	DGQ		SCREW, M6x1x30
11	6035 256	1	J, U			EN0	DGQ		SNAP RING, Rod
12	4799 453	1	J, U			EN0	DGQ		LEVER, Shift Shaft

2006 Liberty (KJ)

SERIES	LINE	BODY	ENGINE	TRANSMISSION
H =HIGHLINE	T =JEEP - 2WD	74 =SPORT UTILITY 4-DR	EKG=3.7L V6 Eng.	DG6=4-Spd. Auto. 42RLE Trans.
M =MEDIUM	J =JEEP - 4WD		ENR=2.8L 4 Cyl Turbo Diesel Eng.	DGV=4-Spd. Auto. VLP Trans.
P =PREMIUM	U =JEEP - 4WD (RHD)		ENJ=2.5L 4 Cyl 16V Turbo Diesel Eng.	DGQ=5-Spd Auto. 5-45RFE Trans.
			ED1=2.4L 4 Cyl DOHC 16v SMPI Eng.	DEH=6-Speed Man. NSG370 Trans.
				DDD=5-Speed HD Man. Trans.
				DDK=5-Speed HD Man. Trans.

Shifter Control [DGQ]
Figure 5-45RFE-1210

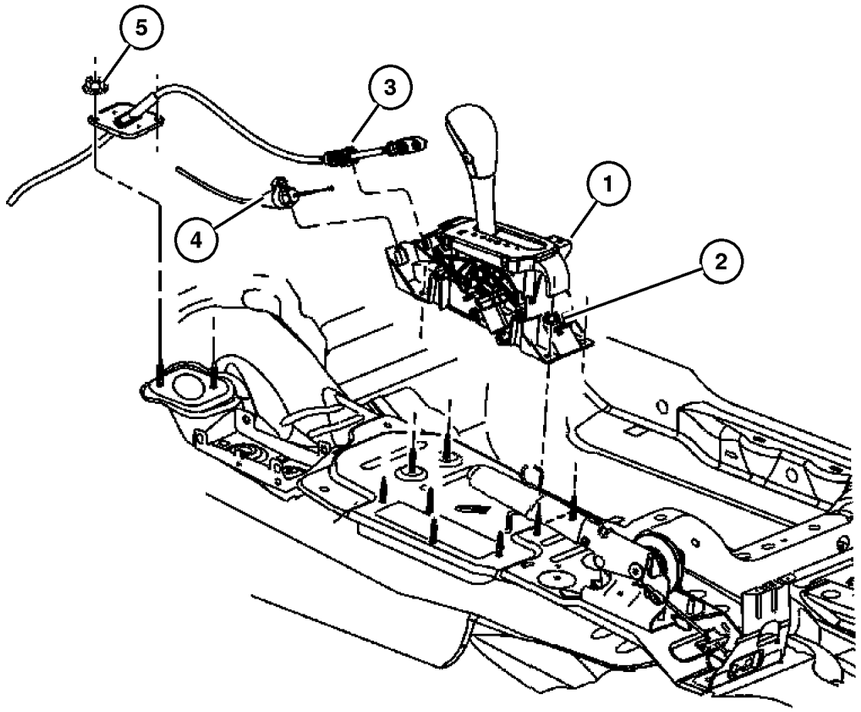

ITEM	PART NUMBER	QTY	LINE	SERIES	BODY	ENGINE	TRANS	TRIM	DESCRIPTION
NOTE:									
Sales Codes:									
[DGQ]=5 Speed Automatic Transmission - [5-45RFE]									
[EN0]=All 4/5 Cylinder Turbo Diesel Engines									
1									HOUSING AND LEVER, Shifter
	52109 779AC	1	J, T				DG0		
	52109 780AC	1	U				DG0		
2	6104 725AA	4							NUT AND WASHER, M6x1
3	52109 781AA	1					DG0		CABLE, Gearshift Control
4	52104 319AC	1					DG0		CABLE, Gearshift Lock
5	6502 726	2							NUT

2006 Liberty (KJ)

SERIES	LINE	BODY	ENGINE	TRANSMISSION
H =HIGHLINE	T =JEEP - 2WD	74 =SPORT UTILITY 4-DR	EKG=3.7L V6 Eng.	DG6=4-Spd. Auto. 42RLE Trans.
M =MEDIUM	J =JEEP - 4WD		ENR=2.8L 4 Cyl Turbo Diesel Eng.	DGV=4-Spd. Auto. VLP Trans.
P =PREMIUM	U =JEEP - 4WD (RHD)		ENJ=2.5L 4 Cyl 16V Turbo Diesel Eng.	DGQ=5-Spd Auto. 5-45RFE Trans.
			ED1=2.4L 4 Cyl DOHC 16v SMPI Eng.	DEH=6-Speed Man. NSG370 Trans.
				DDD=5-Speed HD Man. Trans.
				DDK=5-Speed HD Man. Trans.

Manual Control Lever [DGQ]
Figure 5-45RFE-1220

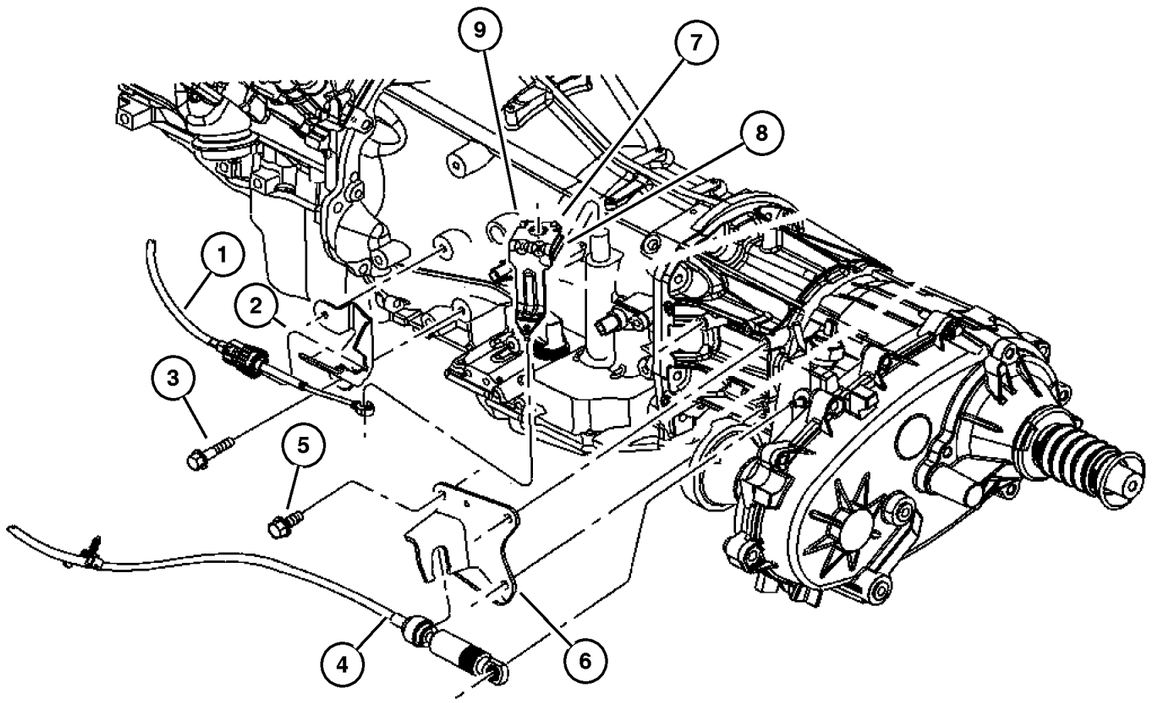

ITEM	PART NUMBER	QTY	LINE	SERIES	BODY	ENGINE	TRANS	TRIM	DESCRIPTION
NOTE:									
Sales Codes:									
[DGQ]=5 Speed Automatic Transmission - [5-45RFE]									
[EN0]=All 4/5 Cylinder Turbo Diesel Engines									
1	52109 781AA	1					DG0		CABLE, Gearshift Control
2	52104 371AG	1					DGQ		BRACKET, Shift Cable
3	6101 758	2					DGQ		SCREW, Hex Head, M8x1.25x20
4									SHIFTER, Transfer Case
	52128 999AG	1	J, U						With [DHN / DHE]
	52129 243AF	1	J, U						With [DHP]
5	6101 752	3	J, U				DG0		SCREW AND WASHER, Hex Head, M10x1.5x28
6	52128 955AB	1	J, U				DGQ		BRACKET, Shifter
7	52109 706AB	1					DGQ		LEVER, Manual Control
8									NUT, M6x1.00, (NOT SERVICED) (Not Serviced)
9	6101 978	1					DGQ		SCREW AND WASHER, Hex Head, M8-1.25x40

2006 Liberty (KJ)

SERIES	LINE	BODY	ENGINE	TRANSMISSION
H =HIGHLINE	T =JEEP - 2WD	74 =SPORT UTILITY 4-DR	EKG=3.7L V6 Eng.	DG6=4-Spd. Auto. 42RLE Trans.
M =MEDIUM	J =JEEP - 4WD		ENR=2.8L 4 Cyl Turbo Diesel Eng.	DGV=4-Spd. Auto. VLP Trans.
P =PREMIUM	U =JEEP - 4WD (RHD)		ENJ=2.5L 4 Cyl 16V Turbo Diesel Eng.	DGQ=5-Spd Auto. 5-45RFE Trans.
			ED1=2.4L 4 Cyl DOHC 16v SMPI Eng.	DEH=6-Speed Man. NSG370 Trans.
				DDD=5-Speed HD Man. Trans.
				DDK=5-Speed HD Man. Trans.

L / R Clutch Package [DGQ]
Figure 5-45RFE-1310

LR CLUTCH PACKAGE 05013091aa

	D-ring, external (L/R piston outer)
	D-ring, internal (L/R piston inner)
(6)	Plate, clutch separator (1.74mm thk)
(6)	Disc assy, clutch (L/R)
	Snap ring, flat (1.5/1.6 thk)
	Snap ring, flat (2.03/2.13 thk)
	Snap ring, flat (2.54/2.68 thk)
(2)	Retainer, c-clip

ITEM	PART NUMBER	QTY	LINE	SERIES	BODY	ENGINE	TRANS	TRIM	DESCRIPTION
NOTE:									
Sales Codes:									
[DGQ]=5 Speed Automatic Transmission - [5-45RFE]									
[EN0]=All 4/5 Cylinder Turbo Diesel Engines									
1	5073 003AA	1	J, U			EN0	DGQ		CLUTCH PACKAGE, Automatic Transmission, Low/Reverse

2006 Liberty (KJ)

SERIES	LINE	BODY	ENGINE	TRANSMISSION
H =HIGHLINE	T =JEEP - 2WD	74 =SPORT UTILITY 4-DR	EKG=3.7L V6 Eng.	DG6=4-Spd. Auto. 42RLE Trans.
M =MEDIUM	J =JEEP - 4WD		ENR=2.8L 4 Cyl Turbo Diesel Eng.	DGV=4-Spd. Auto. VLP Trans.
P =PREMIUM	U =JEEP - 4WD (RHD)		ENJ=2.5L 4 Cyl 16V Turbo Diesel Eng.	DGQ=5-Spd Auto. 5-45RFE Trans.
			ED1=2.4L 4 Cyl DOHC 16v SMPI Eng.	DEH=6-Speed Man. NSG370 Trans.
				DDD=5-Speed HD Man. Trans.
				DDK=5-Speed HD Man. Trans.

SELECTIVE THRUST PLATES **05013093aa**

INPUT CLUTCH THRUST PLATE PKG (1)

	Thrust plate, input clutc 1.52 / 1.61
	Thrust plate, input clutc 1.66 / 1.75
	Thrust plate, input clutc 1.80 / 1.89
	Thrust plate, input clutc 1.94 / 2.03
	Thrust plate, input clutc 2.08 / 2.17
	Thrust plate, input clutc 2.22 / 2.31
	Thrust plate, input clutc 2.36 / 2.45
	Thrust plate, input clutc 2.50 / 2.59
	Thrust plate, input clutc 2.64 / 2.73
	Thrust plate, input clutc 2.78 / 2.87
	Thrust plate, input clutc 2.92 / 3.01
	Thrust plate, input clutc 3.06 / 3.15
	Thrust plate, input clutc 3.20 / 3.29
	Thrust plate, input clutc 3.34 / 3.43
	Thrust plate, input clutc 3.62 / 3.71

ITEM	PART NUMBER	QTY	LINE	SERIES	BODY	ENGINE	TRANS	TRIM	DESCRIPTION

NOTE:

Sales Codes:

[DGQ]=5 Speed Automatic Transmission - [5-45RFE]

[EN0]=All 4/5 Cylinder Turbo Diesel Engines

1	5013 093AA	1	J, U			EN0	DGQ		PLATE PACKAGE, Input Clutch Thrust

2006 Liberty (KJ)

SERIES	LINE	BODY	ENGINE	TRANSMISSION
H =HIGHLINE	T =JEEP - 2WD	74 =SPORT UTILITY 4-DR	EKG=3.7L V6 Eng.	DG6=4-Spd. Auto. 42RLE Trans.
M =MEDIUM	J =JEEP - 4WD		ENR=2.8L 4 Cyl Turbo Diesel Eng.	DGV=4-Spd. Auto. VLP Trans.
P =PREMIUM	U =JEEP - 4WD (RHD)		ENJ=2.5L 4 Cyl 16V Turbo Diesel Eng.	DGQ=5-Spd Auto. 5-45RFE Trans.
			ED1=2.4L 4 Cyl DOHC 16v SMPI Eng.	DEH=6-Speed Man. NSG370 Trans.
				DDD=5-Speed HD Man. Trans.
				DDK=5-Speed HD Man. Trans.

Overhaul / Seal & Gasket Package [DGQ]
Figure 5-45RFE-1330

O/H seal/gasket package		05014221ac
	2&4 clutch package	
	Input clutch package	
	L/R clutch package	
	Sump filter & seal package	
	Cooler filter	
	fill tube seal	
	Frt pmp cover o-ring/seal assy	
	Rotating shaft seal,pmp hsg	
	Adapter seal, 4x4	
	Extension seal,4x2	
	Manual lever seal	
(2)	Speed sensor seal	
	Reaction supt ring seal	
	Rev O/D clutch filter	
(10)	Accumulator ring seal	
(3)	Valve body seal	
	Check valve o-ring	
	Solenoid insulator seal	
	T/C seal	

1

ITEM	PART NUMBER	QTY	LINE	SERIES	BODY	ENGINE	TRANS	TRIM	DESCRIPTION
NOTE:									
Sales Codes:									
[DGQ]=5 Speed Automatic Transmission - [5-45RFE]									
[EN0]=All 4/5 Cylinder Turbo Diesel Engines									
1	5014 221AJ	1	J, U			EN0	DGQ		OVERHAUL PACKAGE, Transmission

2006 Liberty (KJ)

SERIES	LINE	BODY	ENGINE	TRANSMISSION
H =HIGHLINE	T =JEEP - 2WD	74 =SPORT UTILITY 4-DR	EKG=3.7L V6 Eng.	DG6=4-Spd. Auto. 42RLE Trans.
M =MEDIUM	J =JEEP - 4WD		ENR=2.8L 4 Cyl Turbo Diesel Eng.	DGV=4-Spd. Auto. VLP Trans.
P =PREMIUM	U =JEEP - 4WD (RHD)		ENJ=2.5L 4 Cyl 16V Turbo Diesel Eng.	DGQ=5-Spd Auto. 5-45RFE Trans.
			ED1=2.4L 4 Cyl DOHC 16v SMPI Eng.	DEH=6-Speed Man. NSG370 Trans.
				DDD=5-Speed HD Man. Trans.
				DDK=5-Speed HD Man. Trans.

Input Clutch Package [DGQ]
Figure 5-45RFE-1340

INPUT CLUTCH PACKAGE 05013090aa

	O-ring, large (2.62mm x 79.84 ID,gm)
	O-ring, small (2.62mm x 70.56 ID,red)
(2)	Seal, internal lip
(2)	Ring seal, I-shaft
	O-ring, piston inner (2.62mm x 93.54 ID)
(5)	Plate, clutch separator (1.74mm thk)
(4)	Disc assy, clutch (u/d clutch)
(4)	Disc assy, clutch (o/d clutch)
(3)	PLate, clutch separator (2.21mm thk, O/D)
(2)	Disc assy, clutch (rev clutch)
	Snap ring,tapered, internal butterfly end
	Snap ring, flat (1.5/1.6 thk)
	Snap ring, flat (1.80/1.90 thk)
	Snap ring, flat (2.15/2.25 thk)
	Piston & seal, underdrive
	Piston & seal, underdrive balance

ITEM	PART NUMBER	QTY	LINE	SERIES	BODY	ENGINE	TRANS	TRIM	DESCRIPTION
NOTE:									
Sales Codes:									
[DGQ]=5 Speed Automatic Transmission - [5-45RFE]									
[EN0]=All 4/5 Cylinder Turbo Diesel Engines									
1	5013 090AC	1	J, U			EN0	DGQ		CLUTCH PACKAGE, Automatic Transmission, Input

2006 Liberty (KJ)

SERIES	LINE	BODY	ENGINE	TRANSMISSION
H =HIGHLINE	T =JEEP - 2WD	74 =SPORT UTILITY 4-DR	EKG=3.7L V6 Eng.	DG6=4-Spd. Auto. 42RLE Trans.
M =MEDIUM	J =JEEP - 4WD		ENR=2.8L 4 Cyl Turbo Diesel Eng.	DGV=4-Spd. Auto. VLP Trans.
P =PREMIUM	U =JEEP - 4WD (RHD)		ENJ=2.5L 4 Cyl 16V Turbo Diesel Eng.	DGQ=5-Spd Auto. 5-45RFE Trans.
			ED1=2.4L 4 Cyl DOHC 16v SMPI Eng.	DEH=6-Speed Man. NSG370 Trans.
				DDD=5-Speed HD Man. Trans.
				DDK=5-Speed HD Man. Trans.

SELECTIVE THRUST PLATES
PLANETARY THRUST PLATE PKG 05013092aa

	Thrust plate, planetary	1.62 / 1.75
	Thrust plate, planetary	1.81 / 1.94
	Thrust plate, planetary	1.96 / 2.09
	Thrust plate, planetary	2.11 / 2.24
	Thrust plate, planetary	2.26 / 2.39
	Thrust plate, planetary	2.41 / 2.54
	Thrust plate, planetary	2.56 / 2.69
	Thrust plate, planetary	2.71 / 2.84
	Thrust plate, planetary	2.86 / 2.99
	Thrust plate, planetary	3.01 / 3.14
	Thrust plate, planetary	3.16 / 3.29
	Thrust plate, planetary	3.31 / 3.44
	Thrust plate, planetary	3.46 / 3.59
	Thrust plate, planetary	3.61 / 3.74
	Thrust plate, planetary	3.76 / 3.89
	Thrust plate, planetary	3.91 / 4.04
	Thrust plate, planetary	4.06 / 4.19
	Thrust plate, planetary	4.21 / 4.34
	Thrust plate, planetary	4.36 / 4.49

1

ITEM	PART NUMBER	QTY	LINE	SERIES	BODY	ENGINE	TRANS	TRIM	DESCRIPTION
NOTE:									
Sales Codes:									
[DGQ]=5 Speed Automatic Transmission - [5-45RFE]									
[EN0]=All 4/5 Cylinder Turbo Diesel Engines									
1	5013 092AB	1	J, U			EN0	DGQ		PLATE PACKAGE, Planetary Thrust
-2									PLATE, Clutch Hub Thrust, Input Clutch Plate
	4799 830AB-	AR	J, U			EN0	DGQ		[1.94/2.03]
	4799 831AB-	AR	J, U			EN0	DGQ		[2.08/2.17]
	4799 832AB-	AR	J, U			EN0	DGQ		[2.22/2.31]
	4799 833AB-	AR	J, U			EN0	DGQ		[2.36/2.45]
	4799 834AB-	AR	J, U			EN0	DGQ		[2.50/2.59]
	4799 835AB-	AR	J, U			EN0	DGQ		[2.64/2.73]
	4799 836AB-	AR	J, U			EN0	DGQ		[2.78/2.87]
	4799 837AB-	AR	J, U			EN0	DGQ		[2.92/3.01]
-3									PLATE, Planetary, Thrust Plate
	4799 810AC-	AR	J, U			EN0	DGQ		[2.26/2.39]
	4799 811AC-	AR	J, U			EN0	DGQ		[2.41/2.54]
	4799 812AC-	AR	J, U			EN0	DGQ		[2.56/2.69]
	4799 813AC-	AR	J, U			EN0	DGQ		[2.71/2.84]
	4799 814AC-	AR	J, U			EN0	DGQ		[2.86/2.99]
	4799 816AC-	AR	J, U			EN0	DGQ		[3.16/3.29]
	4799 817AC-	AR	J, U			EN0	DGQ		[3.31/3.44]
	4799 818AC-	AR	J, U			EN0	DGQ		[3.46/3.59]
	4799 819AC-	AR	J, U			EN0	DGQ		[3.61/3.74]

2006 Liberty (KJ)

SERIES	LINE	BODY	ENGINE	TRANSMISSION
H =HIGHLINE	T =JEEP - 2WD	74 =SPORT UTILITY 4-DR	EKG=3.7L V6 Eng.	DG6=4-Spd. Auto. 42RLE Trans.
M =MEDIUM	J =JEEP - 4WD		ENR=2.8L 4 Cyl Turbo Diesel Eng.	DGV=4-Spd. Auto. VLP Trans.
P =PREMIUM	U =JEEP - 4WD (RHD)		ENJ=2.5L 4 Cyl 16V Turbo Diesel Eng.	DGQ=5-Spd Auto. 5-45RFE Trans.
			ED1=2.4L 4 Cyl DOHC 16v SMPI Eng.	DEH=6-Speed Man. NSG370 Trans.
				DDD=5-Speed HD Man. Trans.
				DDK=5-Speed HD Man. Trans.

1

2&4 CLUTCH PACKAGE 05013087aa

(2)	Disc assy, clutch (2nd clutch)
(2)	Plate, clutch separator
	D-ring, external (2nd outer)
	D-ring, internal (2nd inner)
	D-ring, internal (4th outer)
	D-ring, internal (4th inner)
(3)	Plate, clutch separator (4th clutch)
(3)	Disc assy, clutch (4th clutch)
	Snap ring (4th, 1.74/1.84 thk)
	Snap ring (4th, 2.15/2.25 thk)
	Snap ring (4th, 2.56/2.66 thk)

ITEM	PART NUMBER	QTY	LINE	SERIES	BODY	ENGINE	TRANS	TRIM	DESCRIPTION
NOTE:									
Sales Codes:									
[DGQ]=5 Speed Automatic Transmission - [5-45RFE]									
[EN0]=All 4/5 Cylinder Turbo Diesel Engines									
1	5013 087AD	1	J, U			EN0	DGQ		CLUTCH PACKAGE, Automatic Transmission, 2/4

2006 Liberty (KJ)

SERIES	LINE	BODY	ENGINE	TRANSMISSION
H =HIGHLINE	T =JEEP - 2WD	74 =SPORT UTILITY 4-DR	EKG=3.7L V6 Eng.	DG6=4-Spd. Auto. 42RLE Trans.
M =MEDIUM	J =JEEP - 4WD		ENR=2.8L 4 Cyl Turbo Diesel Eng.	DGV=4-Spd. Auto. VLP Trans.
P =PREMIUM	U =JEEP - 4WD (RHD)		ENJ=2.5L 4 Cyl 16V Turbo Diesel Eng.	DGQ=5-Spd Auto. 5-45RFE Trans.
			ED1=2.4L 4 Cyl DOHC 16v SMPI Eng.	DEH=6-Speed Man. NSG370 Trans.
				DDD=5-Speed HD Man. Trans.
				DDK=5-Speed HD Man. Trans.

Group – NSG370

Manual Transmission 6 Speed

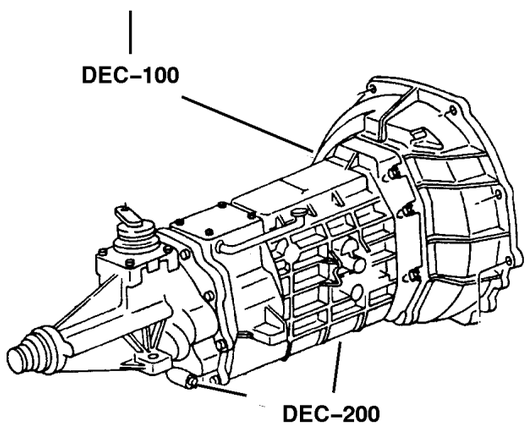

NSG370–100 Transmission	NSG370–200 Case & Extension	NSG370–400 Gear Train	NSG370–900 Forks and Rails
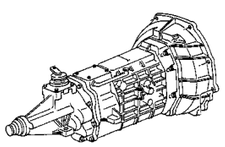	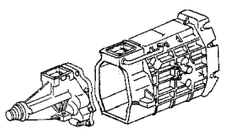	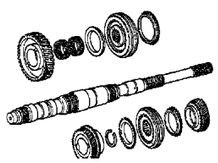	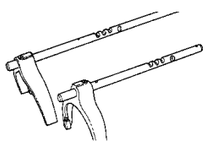
NSG370–1200 Gear Shift Controls 			

GROUP NSG370 - Manual Transmission 6 Speed

Illustration Title	Group-Fig. No.
Transmission	
Transmission Assembly [DEH]	Fig. NSG370-110
Case & Extension	
Front Case & Related Parts [DEH]	Fig. NSG370-210
Rear Case & Related Parts [DEH]	Fig. NSG370-220
Gear Train	
Input Shaft [DEH]	Fig. NSG370-410
Main Shaft [DEH]	Fig. NSG370-420
Countershaft [DEH]	Fig. NSG370-430
Forks and Rails	
Fork & Rail [DEH]	Fig. NSG370-910
Gear Shift Controls	
Gearshift Control [DEH]	Fig. NSG370-1210

Transmission Assembly [DEH]
Figure NSG370-110

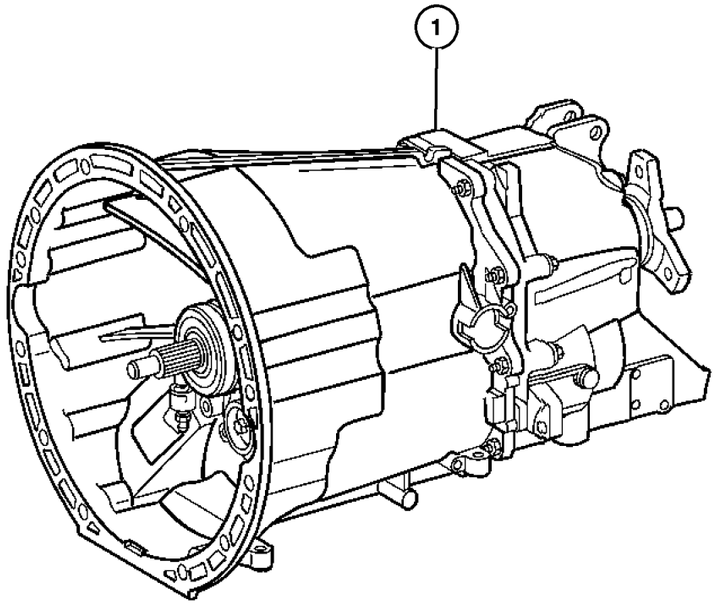

ITEM	PART NUMBER	QTY	LINE	SERIES	BODY	ENGINE	TRANS	TRIM	DESCRIPTION
NOTE:									
Sales Codes:									
[DEH]=6 Speed Manual Transmission - [NSG370]									
[ED0]=All 2.4L In-Line 4 Cylinder Engines									
[EK0]=All 3.7L V-6 Engines									
[EN0]=All 4/5 Cylinder Turbo Diesel Engines									
1									TRANSMISSION, NSG370
	52104 702AC	1	J, U			EK0	DEH		With Stamp # [52104702AC]
	52104 703AC	1	T			EK0	DEH		With Stamp # [52104703AC]
	52104 704AC	1	J, U			EN0	DEH		With Stamp # [52104704AC]

2006 Liberty (KJ)

SERIES	LINE	BODY	ENGINE	TRANSMISSION
H =HIGHLINE	T =JEEP - 2WD	74 =SPORT UTILITY 4-DR	EKG=3.7L V6 Eng.	DG6=4-Spd. Auto. 42RLE Trans.
M =MEDIUM	J =JEEP - 4WD		ENR=2.8L 4 Cyl Turbo Diesel Eng.	DGV=4-Spd. Auto. VLP Trans.
P =PREMIUM	U =JEEP - 4WD (RHD)		ENJ=2.5L 4 Cyl 16V Turbo Diesel Eng.	DGQ=5-Spd Auto. 5-45RFE Trans.
			ED1=2.4L 4 Cyl DOHC 16v SMPI Eng.	DEH=6-Speed Man. NSG370 Trans.
				DDD=5-Speed HD Man. Trans.
				DDK=5-Speed HD Man. Trans.

Front Case & Related Parts [DEH]
Figure NSG370-210

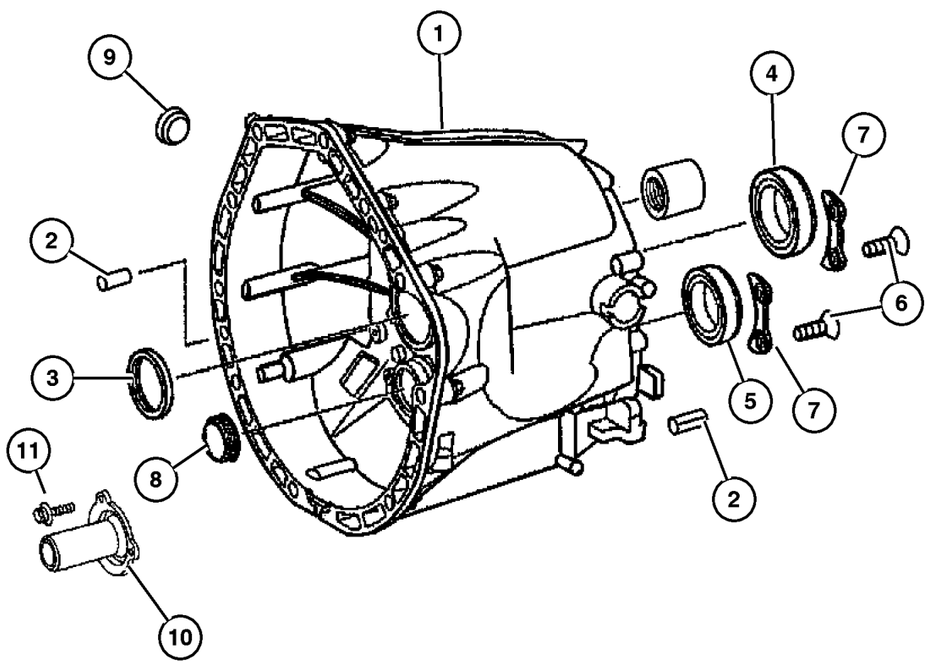

ITEM	PART NUMBER	QTY	LINE	SERIES	BODY	ENGINE	TRANS	TRIM	DESCRIPTION
NOTE:									
Sales Codes:									
[DEH]=6 Speed Manual Transmission - [NSG370]									
[EK0]=All 3.7L V-6 Engines									
[EN0]=All 4/5 Cylinder Turbo Diesel Engines									
1									HOUSING, Transmission
	5159 142AA	1	T			EK0	DEH		
		1	J, U			EN0	DEH		
		1	J, U			EK0	DEH		
2									PIN, Dowel
	5097 594AA	2	T			EK0	DEH		
		2	J, U			EN0	DEH		
		2	J, U			EK0	DEH		
3									SEAL
	5099 840AA	1	T			EK0	DEH		
		1	J, U			EN0	DEH		
		1	J, U			EK0	DEH		
4									BEARING
	5098 879AA	1	T			EK0	DEH		
		1	J, U			EN0	DEH		
		1	J, U			EK0	DEH		
5									BEARING, Countershaft
	5098 878AA	1	T			EK0	DEH		
		1	J, U			EN0	DEH		
		1	J, U			EK0	DEH		
6									SCREW
	5096 957AA	1	T			EK0	DEH		
		1	J, U			EN0	DEH		
		1	J, U			EK0	DEH		
7									RETAINER, Bearing
	5099 213AA	6	T			EK0	DEH		
		6	J, U			EN0	DEH		
		6	J, U			EK0	DEH		
8									PLUG, Expansion
	5096 861AA	1	J, U			EK0	DEH		
		1	T			EK0	DEH		
		1	J, U			EN0	DEH		
9									PLUG, Oil Drain
	5097 712AB	1	T			EK0	DEH		
		1	J, U			EN0	DEH		
		1	J, U			EK0	DEH		
10									GUIDE

2006 Liberty (KJ)

SERIES	LINE	BODY	ENGINE	TRANSMISSION
H =HIGHLINE	T =JEEP - 2WD	74 =SPORT UTILITY 4-DR	EKG=3.7L V6 Eng.	DG6=4-Spd. Auto. 42RLE Trans.
M =MEDIUM	J =JEEP - 4WD		ENR=2.8L 4 Cyl Turbo Diesel Eng.	DGV=4-Spd. Auto. VLP Trans.
P =PREMIUM	U =JEEP - 4WD (RHD)		ENJ=2.5L 4 Cyl 16V Turbo Diesel Eng.	DGQ=5-Spd Auto. 5-45RFE Trans.
			ED1=2.4L 4 Cyl DOHC 16v SMPI Eng.	DEH=6-Speed Man. NSG370 Trans.
				DDD=5-Speed HD Man. Trans.
				DDK=5-Speed HD Man. Trans.

Front Case & Related Parts [DEH]
Figure NSG370-210

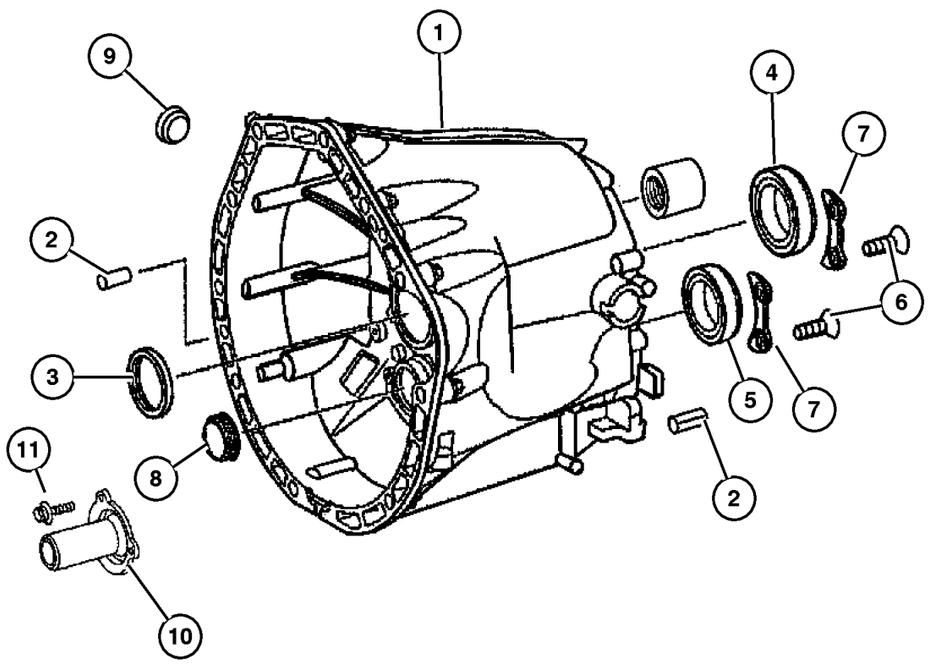

ITEM	PART NUMBER	QTY	LINE	SERIES	BODY	ENGINE	TRANS	TRIM	DESCRIPTION
	5159 176AA	1	T			EK0	DEH		
		1	J, U			EN0	DEH		
		1	J, U			EK0	DEH		
11									SCREW
	6104 005AA	3	T			EK0	DEH		
		3	J, U			EN0	DEH		
		3	J, U			EK0	DEH		

2006 Liberty (KJ)

SERIES	LINE	BODY	ENGINE	TRANSMISSION
H =HIGHLINE	T =JEEP - 2WD	74 =SPORT UTILITY 4-DR	EKG=3.7L V6 Eng.	DG6=4-Spd. Auto. 42RLE Trans.
M =MEDIUM	J =JEEP - 4WD		ENR=2.8L 4 Cyl Turbo Diesel Eng.	DGV=4-Spd. Auto. VLP Trans.
P =PREMIUM	U =JEEP - 4WD (RHD)		ENJ=2.5L 4 Cyl 16V Turbo Diesel Eng.	DGQ=5-Spd Auto. 5-45RFE Trans.
			ED1=2.4L 4 Cyl DOHC 16v SMPI Eng.	DEH=6-Speed Man. NSG370 Trans.
				DDD=5-Speed HD Man. Trans.
				DDK=5-Speed HD Man. Trans.

Rear Case & Related Parts [DEH]
Figure NSG370-220

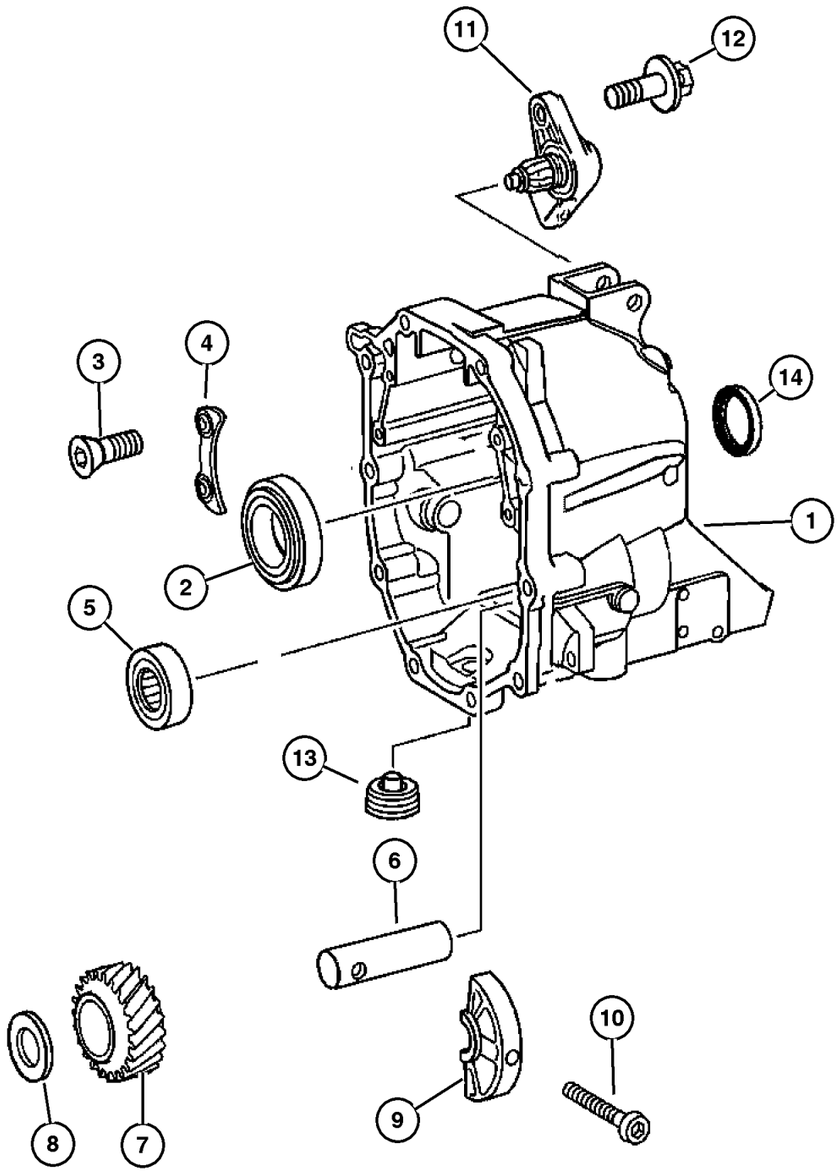

ITEM	PART NUMBER	QTY	LINE	SERIES	BODY	ENGINE	TRANS	TRIM	DESCRIPTION
NOTE:									
Sales Codes:									
[DEH]=6 Speed Manual Transmission - [NSG370]									
[EK0]=All 3.7L V-6 Engines									
[EN0]=All 4/5 Cylinder Turbo Diesel Engines									
1									HOUSING, Transmission
	5159 137AA	1	T			EK0	DEH		
		1	J, U			EN0	DEH		
		1	J, U			EK0	DEH		
2									BEARING
	5096 453AA	1	T			EK0	DEH		
		1	J, U			EN0	DEH		
		1	J, U			EK0	DEH		
3									SCREW
	5096 957AA	1	T			EK0	DEH		
		1	J, U			EN0	DEH		
		1	J, U			EK0	DEH		
4									RETAINER, Bearing
	5099 213AA	6	T			EK0	DEH		
		6	J, U			EN0	DEH		
		6	J, U			EK0	DEH		
5									BEARING
	5101 037AA	1	T			EK0	DEH		
		1	J, U			EN0	DEH		
		1	J, U			EK0	DEH		
6									SHAFT
	5096 914AA	1	T			EK0	DEH		
		1	J, U			EN0	DEH		
		1	J, U			EK0	DEH		
7									GEAR, Reverse
	5096 910AA	1	T			EK0	DEH		
		1	J, U			EN0	DEH		
		1	J, U			EK0	DEH		
8									WASHER, Thrust
	5159 168AA	1	J, U			EN0	DEH		
		1	J, U			EK0	DEH		
		1	J, U			ED0	DEH		
9									BEARING
	5101 037AA	1	T			EK0	DEH		
		1	J, U			EN0	DEH		
		1	J, U			EK0	DEH		
10									SCREW

2006 Liberty (KJ)

SERIES	LINE	BODY	ENGINE	TRANSMISSION
H =HIGHLINE	T =JEEP - 2WD	74 =SPORT UTILITY 4-DR	EKG=3.7L V6 Eng.	DG6=4-Spd. Auto. 42RLE Trans.
M =MEDIUM	J =JEEP - 4WD		ENR=2.8L 4 Cyl Turbo Diesel Eng.	DGV=4-Spd. Auto. VLP Trans.
P =PREMIUM	U =JEEP - 4WD (RHD)		ENJ=2.5L 4 Cyl 16V Turbo Diesel Eng.	DGQ=5-Spd Auto. 5-45RFE Trans.
			ED1=2.4L 4 Cyl DOHC 16v SMPI Eng.	DEH=6-Speed Man. NSG370 Trans.
				DDD=5-Speed HD Man. Trans.
				DDK=5-Speed HD Man. Trans.

Rear Case & Related Parts [DEH]
Figure NSG370-220

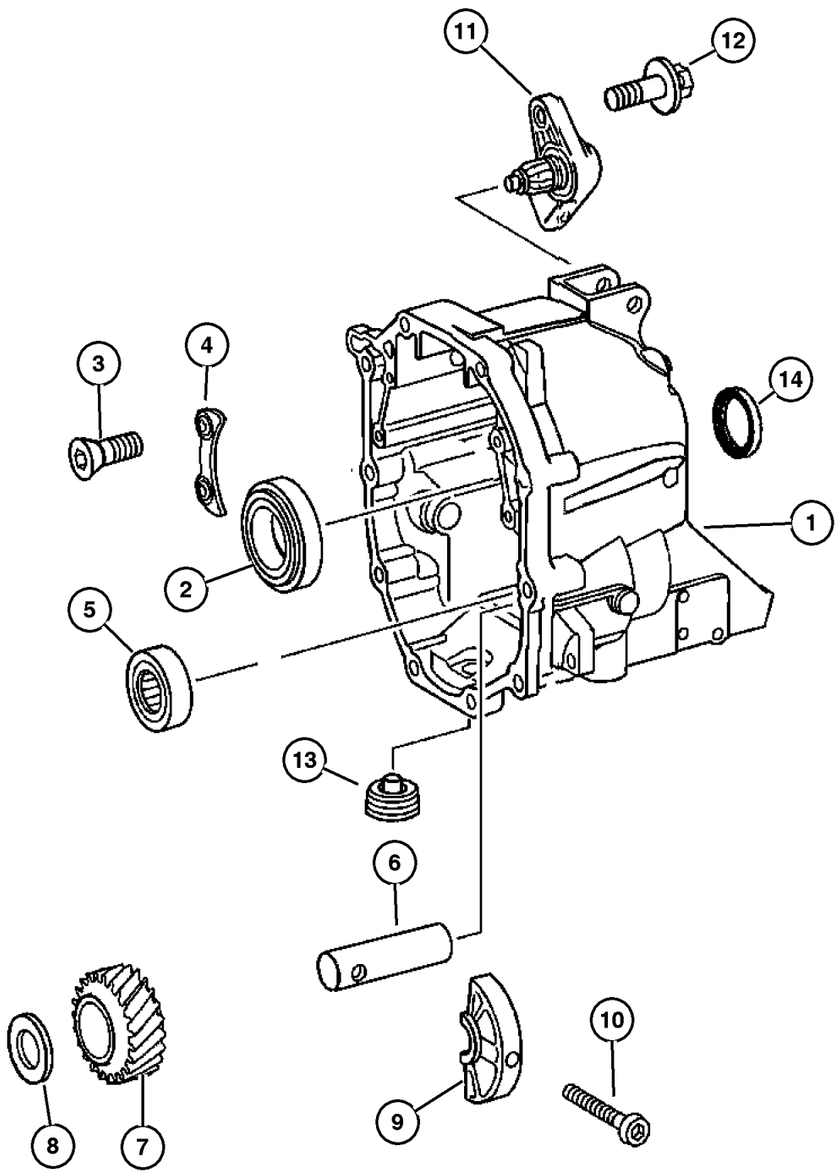

ITEM	PART NUMBER	QTY	LINE	SERIES	BODY	ENGINE	TRANS	TRIM	DESCRIPTION
	5096 957AA	1	T			EK0	DEH		
		1	J, U			EN0	DEH		
		1	J, U			EK0	DEH		
11									SWITCH, Back Up Lamp
	5099 770AA	1	T			EK0	DEH		
		1	J, U			EN0	DEH		
		1	J, U			EK0	DEH		
12									BOLT
	6104 006AA	1	J, U			EK0	DEH		
		1	T			ED0	DEH		
		1	J, U			ED0	DEH		
13									PLUG, Oil Drain
	5175 203AA	1	T			EK0	DEH		
		1	J, U			EN0	DEH		
		1	J, U			EK0	DEH		
14									SEAL
	5159 175AA	1	J, U			EK0	DEH		
		1	T			EK0	DEH		
		1	J, U			EN0	DEH		

2006 Liberty (KJ)

SERIES	LINE	BODY	ENGINE	TRANSMISSION
H =HIGHLINE	T =JEEP - 2WD	74 =SPORT UTILITY 4-DR	EKG=3.7L V6 Eng.	DG6=4-Spd. Auto. 42RLE Trans.
M =MEDIUM	J =JEEP - 4WD		ENR=2.8L 4 Cyl Turbo Diesel Eng.	DGV=4-Spd. Auto. VLP Trans.
P =PREMIUM	U =JEEP - 4WD (RHD)		ENJ=2.5L 4 Cyl 16V Turbo Diesel Eng.	DGQ=5-Spd Auto. 5-45RFE Trans.
			ED1=2.4L 4 Cyl DOHC 16v SMPI Eng.	DEH=6-Speed Man. NSG370 Trans.
				DDD=5-Speed HD Man. Trans.
				DDK=5-Speed HD Man. Trans.

Input Shaft [DEH]
Figure NSG370-410

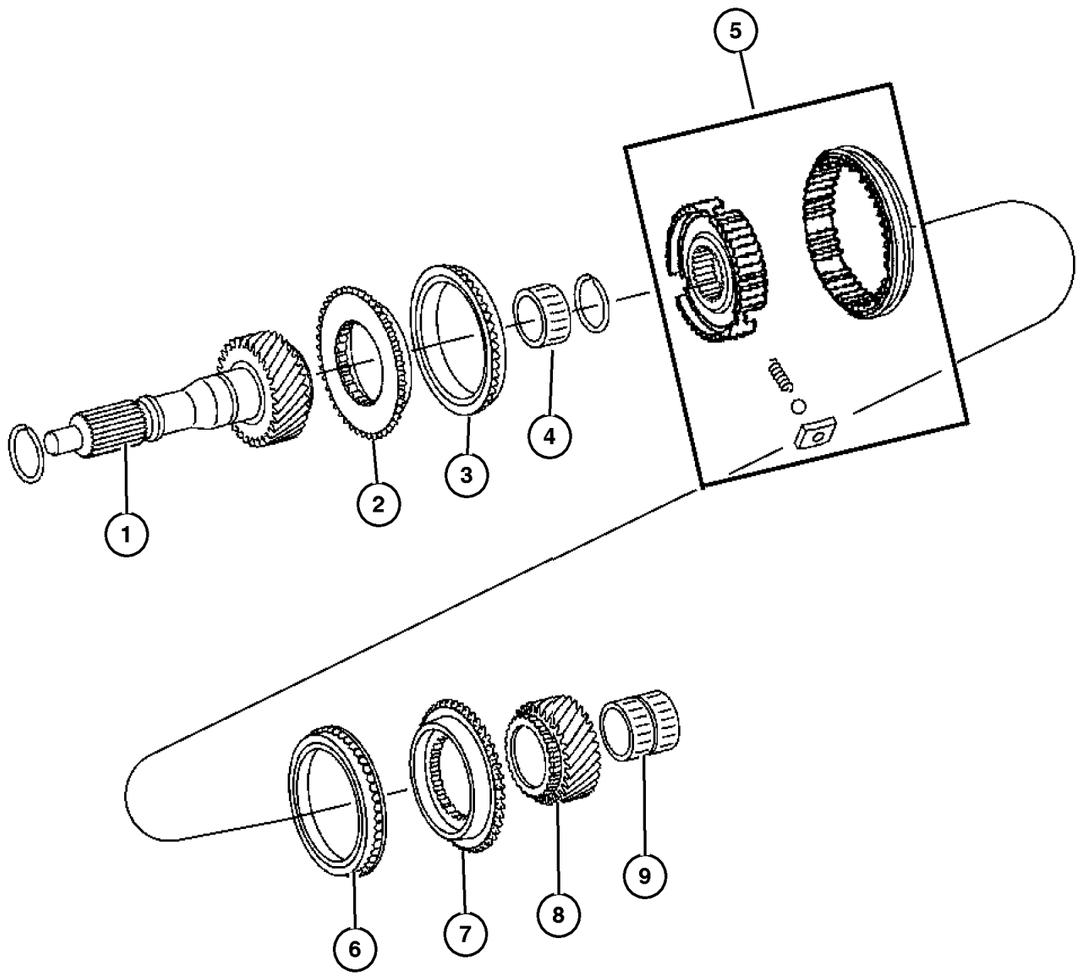

ITEM	PART NUMBER	QTY	LINE	SERIES	BODY	ENGINE	TRANS	TRIM	DESCRIPTION
NOTE:									
Sales Codes:									
[DEH]=6 Speed Manual Transmission - [NSG370]									
[EK0]=All 3.7L V-6 Engines									
[EN0]=All 4/5 Cylinder Turbo Diesel Engines									
1									SHAFT, Input
	5159 171AA	1	T			EK0	DEH		
		1	J, U			EN0	DEH		
		1	J, U			EK0	DEH		
2									STOP RING, Synchronizer
	5159 165AA	1	T			EK0	DEH		
		1	J, U			EN0	DEH		
		1	J, U			EK0	DEH		
3									RING, RING-SYNCHRONIZER
	5134 500AA	1	J, U			EK0	DEH		
		1	T			EK0	DEH		
		1	J, U			EN0	DEH		
4									BEARING, Needle
	5096 457AA	1	T			EK0	DEH		
		1	J, U			EN0	DEH		
		1	J, U			EK0	DEH		
5									SYNCHRONIZER, Fifth and Sixth
	5099 206AA	1	T			EK0	DEH		
		1	J, U			EN0	DEH		
		1	J, U			EK0	DEH		
6									RING, RING-SYNCHRONIZER
	5134 500AA	1	J, U			EK0	DEH		
		1	T			EK0	DEH		
		1	J, U			EN0	DEH		
7									STOP RING, Synchronizer
	5159 165AA	1	T			EK0	DEH		
		1	J, U			EN0	DEH		
		1	J, U			EK0	DEH		
8									GEAR, Sixth
	5099 794AA	1	T			EK0	DEH		
		1	J, U			EN0	DEH		
		1	J, U			EK0	DEH		
9									BEARING, Needle
	5096 456AA	1	T			EK0	DEH		
		1	J, U			EN0	DEH		
		1	J, U			EK0	DEH		

2006 Liberty (KJ)

SERIES	LINE	BODY	ENGINE	TRANSMISSION
H =HIGHLINE	T =JEEP - 2WD	74 =SPORT UTILITY 4-DR	EKG=3.7L V6 Eng.	DG6=4-Spd. Auto. 42RLE Trans.
M =MEDIUM	J =JEEP - 4WD		ENR=2.8L 4 Cyl Turbo Diesel Eng.	DGV=4-Spd. Auto. VLP Trans.
P =PREMIUM	U =JEEP - 4WD (RHD)		ENJ=2.5L 4 Cyl 16V Turbo Diesel Eng.	DGQ=5-Spd Auto. 5-45RFE Trans.
			ED1=2.4L 4 Cyl DOHC 16v SMPI Eng.	DEH=6-Speed Man. NSG370 Trans.
				DDD=5-Speed HD Man. Trans.
				DDK=5-Speed HD Man. Trans.

Main Shaft [DEH]
Figure NSG370-420

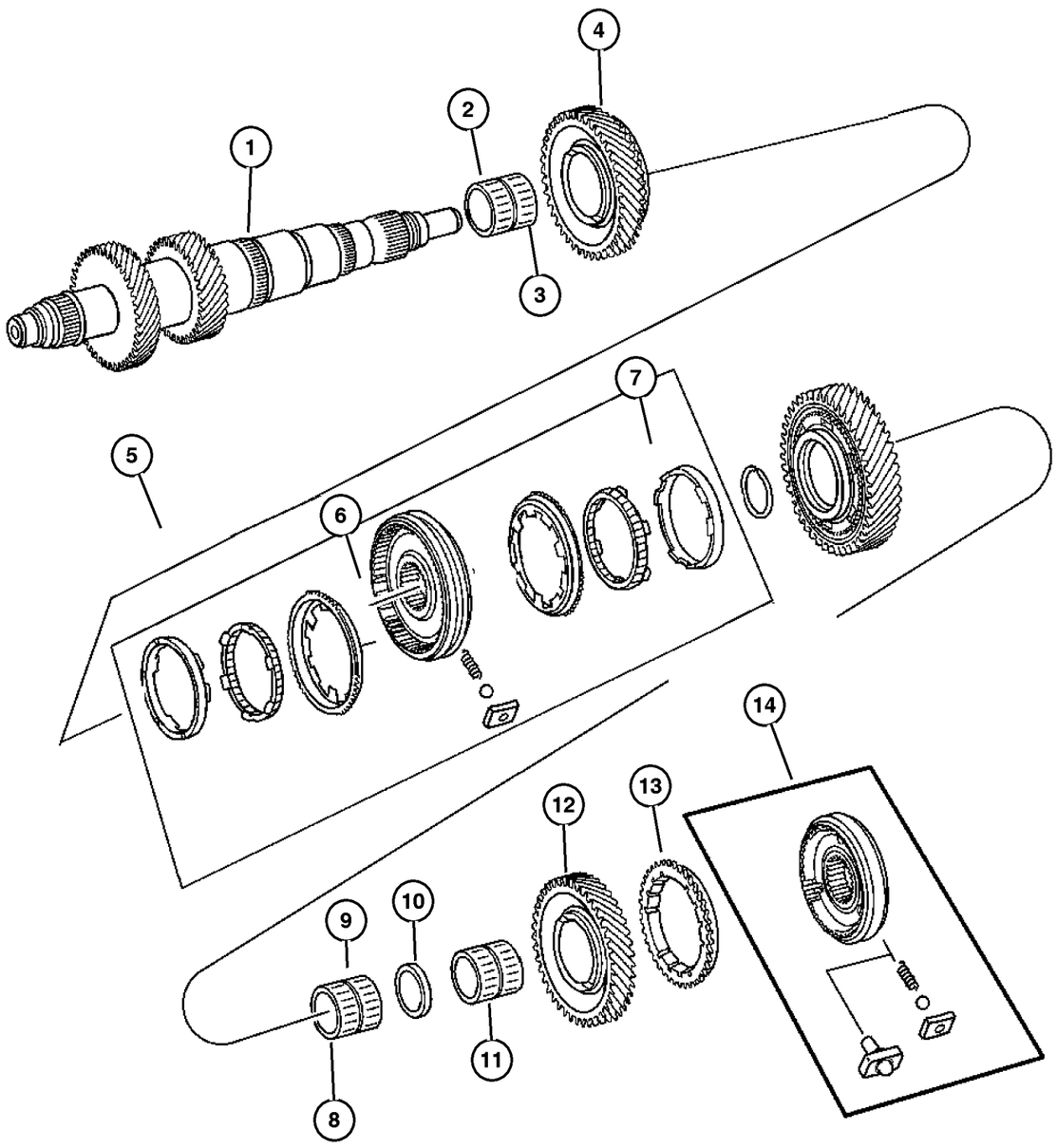

ITEM	PART NUMBER	QTY	LINE	SERIES	BODY	ENGINE	TRANS	TRIM	DESCRIPTION
NOTE:									
Sales Codes:									
[DEH]=6 Speed Manual Transmission - [NSG370]									
[EK0]=All 3.7L V-6 Engines									
[EN0]=All 4/5 Cylinder Turbo Diesel Engines									
1									MAINSHAFT, Transmission
	5159 163AA	1	J, U			EN0	DEH		
		1	J, U			EK0	DEH		
	5159 164AA	1	T			EK0	DEH		
2									BEARING
	5096 453AA	1	T			EK0	DEH		
		1	J, U			EN0	DEH		
		1	J, U			EK0	DEH		
3									BEARING
	5096 453AA	1	T			EK0	DEH		
		1	J, U			EN0	DEH		
		1	J, U			EK0	DEH		
4									GEAR, Second
	5101 448AA	1	T			EK0	DEH		
		1	J, U			EN0	DEH		
		1	J, U			EK0	DEH		
5									SYNCHRONIZER, First and Second
	5137 639AA	1	T			EK0	DEH		
		1	J, U			EN0	DEH		
		1	J, U			EK0	DEH		
6									SNAP RING, (NOT SERVICED) (Not Serviced)
7									GEAR, First
	5101 449AA	1	T			EK0	DEH		
		1	J, U			EN0	DEH		
		1	J, U			EK0	DEH		
8									BEARING, Needle
	5096 452AA	1	T			EK0	DEH		
		1	J, U			EN0	DEH		
		1	J, U			EK0	DEH		
9									BEARING, Needle
	5096 452AA	1	T			EK0	DEH		
		1	J, U			EN0	DEH		
		1	J, U			EK0	DEH		
10									WASHER, Thrust
	5098 081AA	1	T			EK0	DEH		
	5159 168AA	1	J, U			EN0	DEH		

2006 Liberty (KJ)

SERIES	LINE	BODY	ENGINE	TRANSMISSION
H =HIGHLINE	T =JEEP - 2WD	74 =SPORT UTILITY 4-DR	EKG=3.7L V6 Eng.	DG6=4-Spd. Auto. 42RLE Trans.
M =MEDIUM	J =JEEP - 4WD		ENR=2.8L 4 Cyl Turbo Diesel Eng.	DGV=4-Spd. Auto. VLP Trans.
P =PREMIUM	U =JEEP - 4WD (RHD)		ENJ=2.5L 4 Cyl 16V Turbo Diesel Eng.	DGQ=5-Spd Auto. 5-45RFE Trans.
			ED1=2.4L 4 Cyl DOHC 16v SMPI Eng.	DEH=6-Speed Man. NSG370 Trans.
				DDD=5-Speed HD Man. Trans.
				DDK=5-Speed HD Man. Trans.

Main Shaft [DEH]
Figure NSG370-420

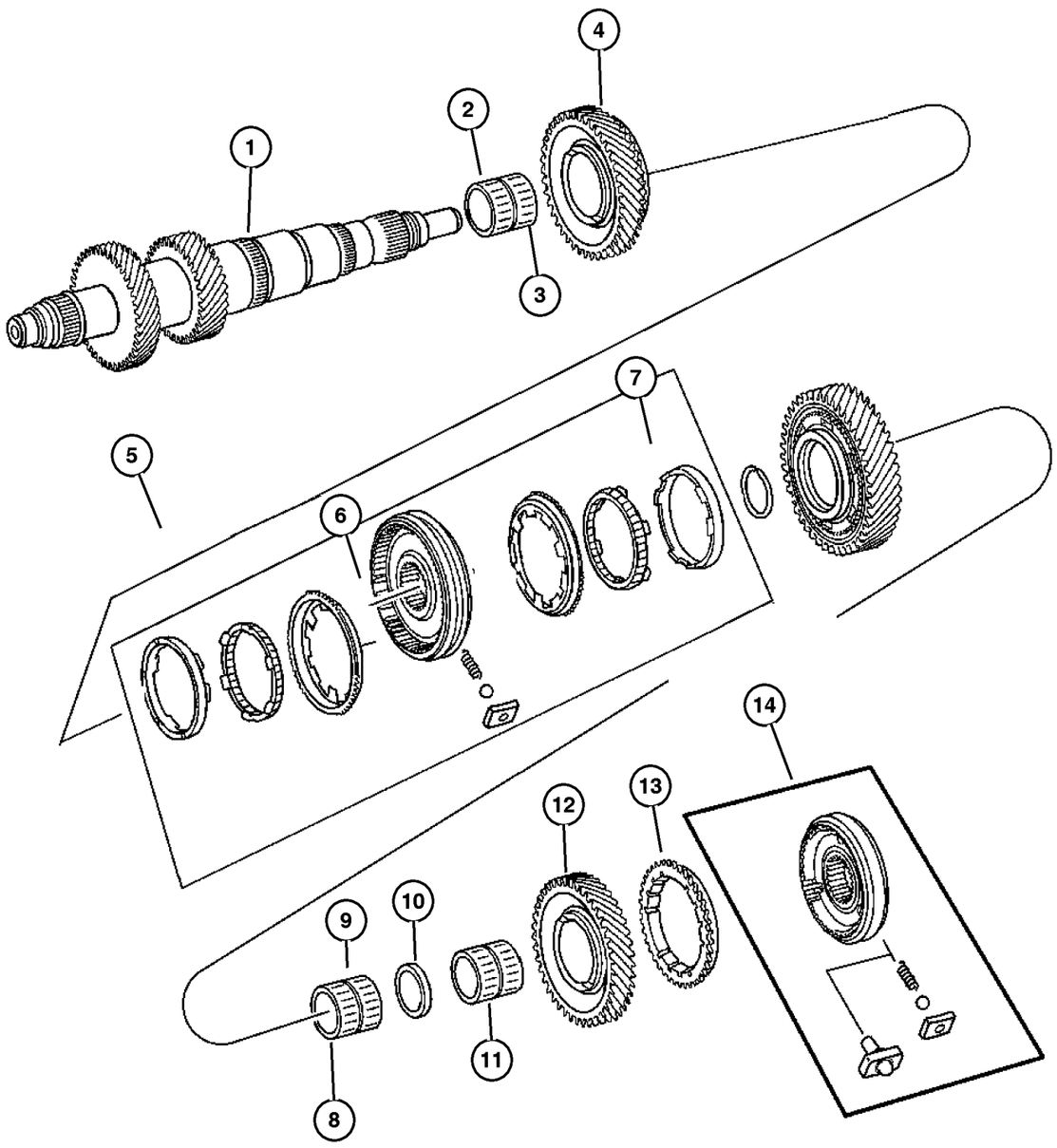

ITEM	PART NUMBER	QTY	LINE	SERIES	BODY	ENGINE	TRANS	TRIM	DESCRIPTION
		1	J, U			EK0	DEH		
11									BEARING, Needle
	5096 359AA	1	T			EK0	DEH		
		1	J, U			EN0	DEH		
		1	J, U			EK0	DEH		
12									GEAR, Reverse
	5134 496AA	1	J, U			EK0	DEH		
		1	T			EK0	DEH		
		1	J, U			EN0	DEH		
13									RING, RING-SYNCHRONIZER
	5134 500AA	1	J, U			EK0	DEH		
		1	T			EK0	DEH		
		1	J, U			EN0	DEH		
14									SYNCHRONIZER, Reverse
	5189 895AA	1	T			EK0	DEH		
		1	J, U			EN0	DEH		
		1	J, U			EK0	DEH		
-15									SLEEVE, reverse synchronizer
	5179 885AA-	1	T			EK0	DEH		
		1	J, U			EN0	DEH		
		1	J, U			ED0	DEH		

2006 Liberty (KJ)

SERIES	LINE	BODY	ENGINE	TRANSMISSION
H =HIGHLINE	T =JEEP - 2WD	74 =SPORT UTILITY 4-DR	EKG=3.7L V6 Eng.	DG6=4-Spd. Auto. 42RLE Trans.
M =MEDIUM	J =JEEP - 4WD		ENR=2.8L 4 Cyl Turbo Diesel Eng.	DGV=4-Spd. Auto. VLP Trans.
P =PREMIUM	U =JEEP - 4WD (RHD)		ENJ=2.5L 4 Cyl 16V Turbo Diesel Eng.	DGQ=5-Spd Auto. 5-45RFE Trans.
			ED1=2.4L 4 Cyl DOHC 16v SMPI Eng.	DEH=6-Speed Man. NSG370 Trans.
				DDD=5-Speed HD Man. Trans.
				DDK=5-Speed HD Man. Trans.

Countershaft [DEH]
Figure NSG370-430

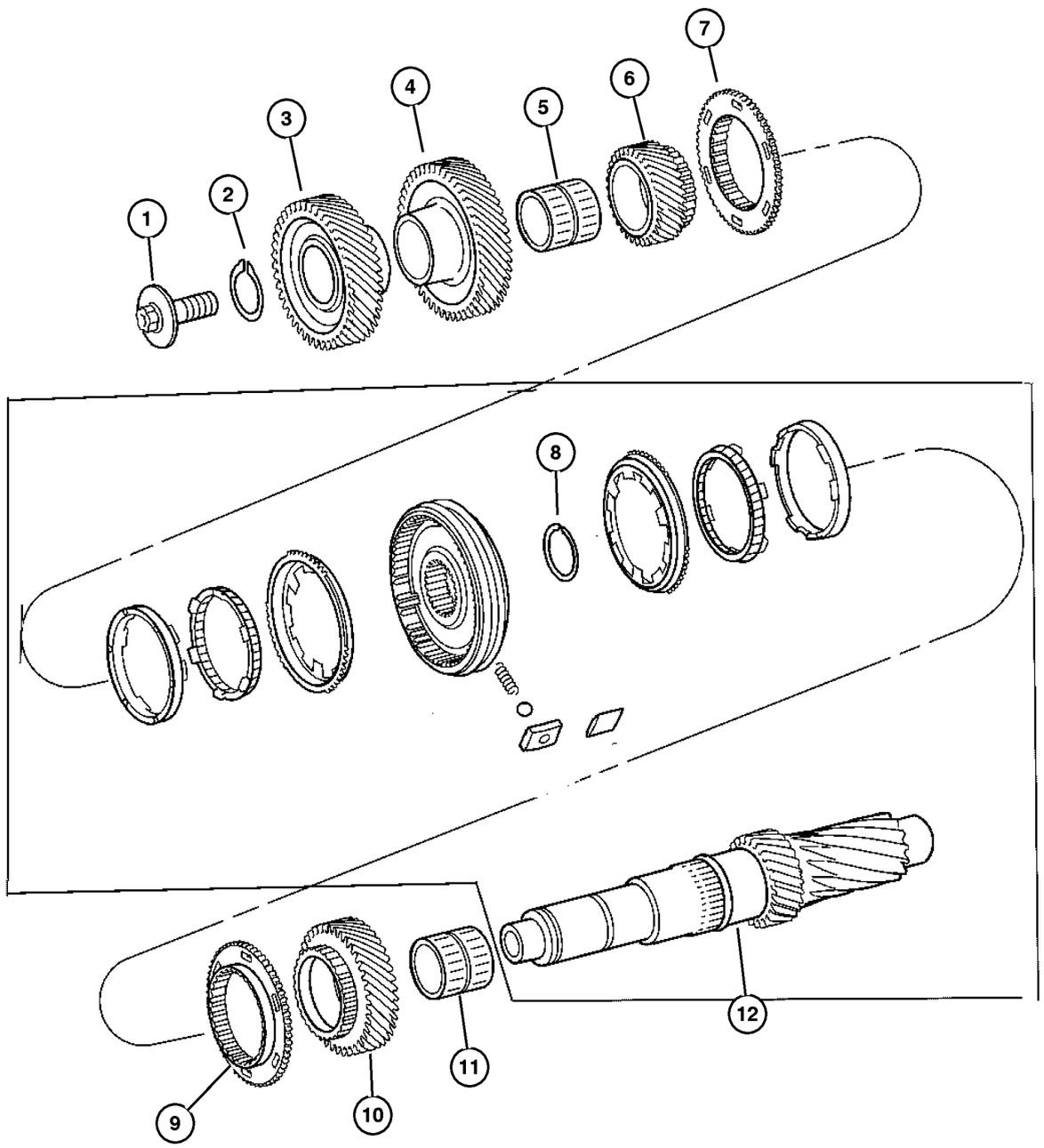

ITEM	PART NUMBER	QTY	LINE	SERIES	BODY	ENGINE	TRANS	TRIM	DESCRIPTION
NOTE:									
Sales Codes:									
[DEH]=6 Speed Manual Transmission - [NSG370]									
[EK0]=All 3.7L V-6 Engines									
[EN0]=All 4/5 Cylinder Turbo Diesel Engines									
1									SCREW
	5098 084AA	1	T			EK0	DEH		
		1	J, U			EN0	DEH		
		1	J, U			EK0	DEH		
2									SNAP RING
	5099 268AA	1	T			EK0	DEH		
		1	J, U			EN0	DEH		
		1	J, U			EK0	DEH		
3									GEAR, Countershaft
	5096 911AA	1	T			EK0	DEH		
		1	J, U			EN0	DEH		
		1	J, U			EK0	DEH		
4									GEAR, Sixth
	5099 795AA	1	T			EK0	DEH		
		1	J, U			EN0	DEH		
		1	J, U			EK0	DEH		
5									BEARING, Needle
	5096 454AA	1	T			EK0	DEH		
		1	J, U			EN0	DEH		
		1	J, U			EK0	DEH		
6									GEAR, Third
	5098 348AA	1	T			EK0	DEH		
		1	J, U			EN0	DEH		
		1	J, U			EK0	DEH		
7									STOP RING, Synchronizer
	5159 165AA	1	T			EK0	DEH		
		1	J, U			EN0	DEH		
		1	J, U			EK0	DEH		
8									SNAP RING, (NOT SERVICED) (Not Serviced)
9									STOP RING, Synchronizer
	5159 165AA	1	T			EK0	DEH		
		1	J, U			EN0	DEH		
		1	J, U			EK0	DEH		
10									GEAR, Fourth
	5098 800AA	1	T			EK0	DEH		
		1	J, U			EN0	DEH		

2006 Liberty (KJ)

SERIES	LINE	BODY	ENGINE	TRANSMISSION
H =HIGHLINE	T =JEEP - 2WD	74 =SPORT UTILITY 4-DR	EKG=3.7L V6 Eng.	DG6=4-Spd. Auto. 42RLE Trans.
M =MEDIUM	J =JEEP - 4WD		ENR=2.8L 4 Cyl Turbo Diesel Eng.	DGV=4-Spd. Auto. VLP Trans.
P =PREMIUM	U =JEEP - 4WD (RHD)		ENJ=2.5L 4 Cyl 16V Turbo Diesel Eng.	DGQ=5-Spd Auto. 5-45RFE Trans.
			ED1=2.4L 4 Cyl DOHC 16v SMPI Eng.	DEH=6-Speed Man. NSG370 Trans.
				DDD=5-Speed HD Man. Trans.
				DDK=5-Speed HD Man. Trans.

Countershaft [DEH]
Figure NSG370-430

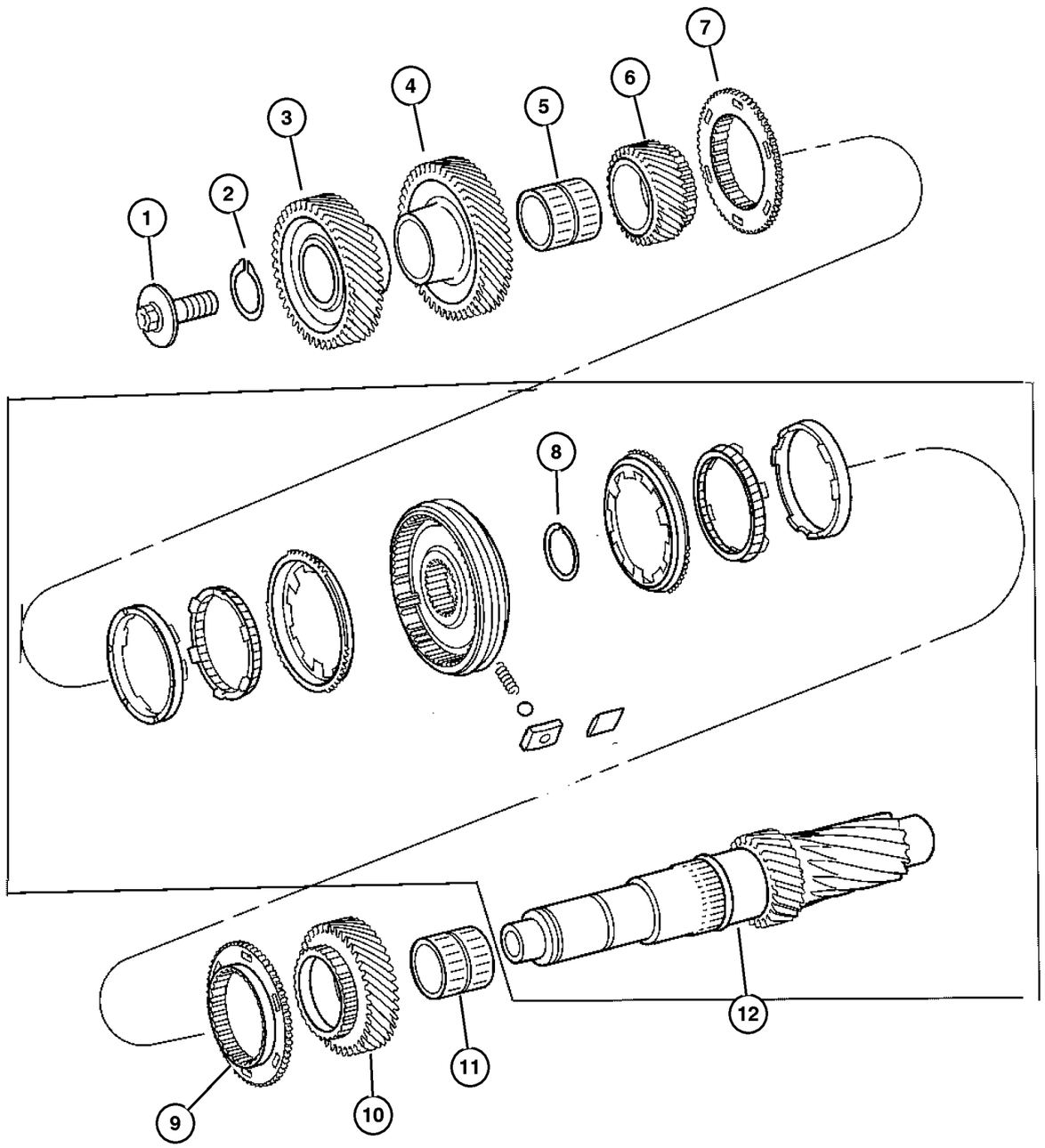

ITEM	PART NUMBER	QTY	LINE	SERIES	BODY	ENGINE	TRANS	TRIM	DESCRIPTION
		1	J, U			EK0	DEH		
11									BEARING, Needle
	5096 455AA	1	T			EK0	DEH		
		1	J, U			EN0	DEH		
		1	J, U			EK0	DEH		
12									COUNTERSHAFT, Includes 3/4 Synchronizer
	5159 162AA	1	T			EK0	DEH		
		1	J, U			EN0	DEH		
		1	J, U			EK0	DEH		
-13									SLINGER, Oil
	5159 167AA-	1	T			EK0	DEH		
		1	J, U			EN0	DEH		
		1	J, U			EK0	DEH		

2006 Liberty (KJ)

SERIES	LINE	BODY	ENGINE	TRANSMISSION
H =HIGHLINE	T =JEEP - 2WD	74 =SPORT UTILITY 4-DR	EKG=3.7L V6 Eng.	DG6=4-Spd. Auto. 42RLE Trans.
M =MEDIUM	J =JEEP - 4WD		ENR=2.8L 4 Cyl Turbo Diesel Eng.	DGV=4-Spd. Auto. VLP Trans.
P =PREMIUM	U =JEEP - 4WD (RHD)		ENJ=2.5L 4 Cyl 16V Turbo Diesel Eng.	DGQ=5-Spd Auto. 5-45RFE Trans.
			ED1=2.4L 4 Cyl DOHC 16v SMPI Eng.	DEH=6-Speed Man. NSG370 Trans.
				DDD=5-Speed HD Man. Trans.
				DDK=5-Speed HD Man. Trans.

Fork & Rail [DEH]
Figure NSG370-910

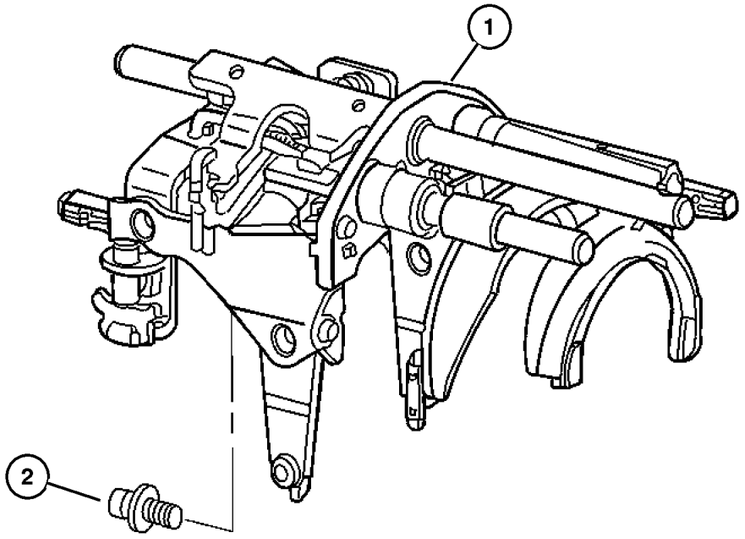

ITEM	PART NUMBER	QTY	LINE	SERIES	BODY	ENGINE	TRANS	TRIM	DESCRIPTION
NOTE:Individual Parts For The Fork Assembly Are Not Serviced									
Sales Codes:									
[DEH]=6 Speed Manual Transmission - [NSG370]									
[EK0]=All 3.7L V-6 Engines									
[EN0]=All 4/5 Cylinder Turbo Diesel Engines									
1									FORK AND RAIL ASSY, Manual Transmission
	5161 076AA	1	J, U			EK0	DEH		
		1	T			EK0	DEH		
		1	J, U			EN0	DEH		
2									SCREW
	5098 084AA	1	T			EK0	DEH		
		1	J, U			EN0	DEH		
		1	J, U			EK0	DEH		

2006 Liberty (KJ)

SERIES	LINE	BODY	ENGINE	TRANSMISSION
H =HIGHLINE	T =JEEP - 2WD	74 =SPORT UTILITY 4-DR	EKG=3.7L V6 Eng.	DG6=4-Spd. Auto. 42RLE Trans.
M =MEDIUM	J =JEEP - 4WD		ENR=2.8L 4 Cyl Turbo Diesel Eng.	DGV=4-Spd. Auto. VLP Trans.
P =PREMIUM	U =JEEP - 4WD (RHD)		ENJ=2.5L 4 Cyl 16V Turbo Diesel Eng.	DGQ=5-Spd Auto. 5-45RFE Trans.
			ED1=2.4L 4 Cyl DOHC 16v SMPI Eng.	DEH=6-Speed Man. NSG370 Trans.
				DDD=5-Speed HD Man. Trans.
				DDK=5-Speed HD Man. Trans.

Gearshift Control [DEH]
Figure NSG370-1210

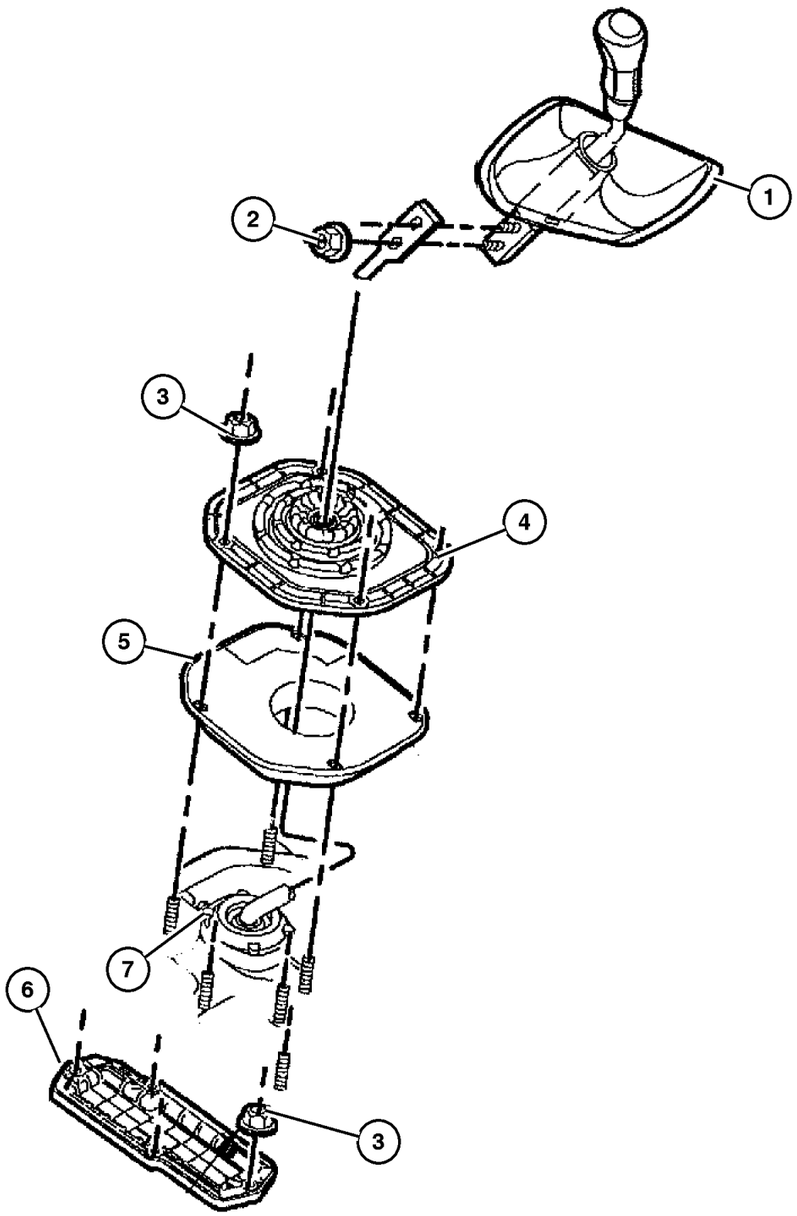

ITEM	PART NUMBER	QTY	LINE	SERIES	BODY	ENGINE	TRANS	TRIM	DESCRIPTION
NOTE:Sales Codes:									
[DEH]= Six Speed Manual Transmission - [NSG370]									
[EK0]=All 3.7L V-6 Engines									
[EN0]=All 4/5 Cylinder Turbo Diesel Engines									
1	52128 821AC	1					DBB		SHIFTER, Transmission
2	6506 668AA	1					DBB		SCREW, Cap
3	3420 1358	5					DBB		NUT AND WASHER, Hex Nut-Sealing Washer, M6 x 1.00
4	52128 819AC	1				EK0, EN0	DBB		BOOT, Gear Shift Lever
5	5080 761AA	1	J, U						SEAL, Gearshift Lever
6	52104 321AA	1	T						COVER, Transfer Case Lever Hole
7									SHIFTER, Tower
	5159 147AA	1	J, U			EN0	DEH		
	5159 148AA	1	T			EK0	DEH		
		1	J, U			EK0	DEH		

2006 Liberty (KJ)

SERIES	LINE	BODY	ENGINE	TRANSMISSION
H =HIGHLINE	T =JEEP - 2WD	74 =SPORT UTILITY 4-DR	EKG=3.7L V6 Eng.	DG6=4-Spd. Auto. 42RLE Trans.
M =MEDIUM	J =JEEP - 4WD		ENR=2.8L 4 Cyl Turbo Diesel Eng.	DGV=4-Spd. Auto. VLP Trans.
P =PREMIUM	U =JEEP - 4WD (RHD)		ENJ=2.5L 4 Cyl 16V Turbo Diesel Eng.	DGQ=5-Spd Auto. 5-45RFE Trans.
			ED1=2.4L 4 Cyl DOHC 16v SMPI Eng.	DEH=6-Speed Man. NSG370 Trans.
				DDD=5-Speed HD Man. Trans.
				DDK=5-Speed HD Man. Trans.

Group – 231

Transfer Case Model 231 [DHN]

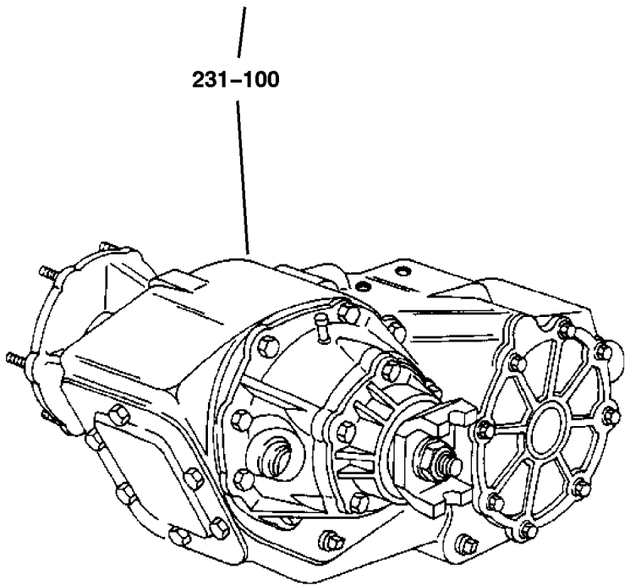

231–100 Transfer Case Assembly	231–200 Case and Related Parts	231–400 Gear Train	231–900 Fork and Rails
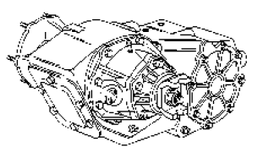		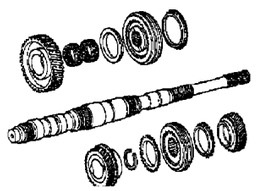	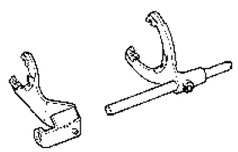
231–1200 Gearshift Controls 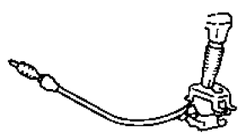			

GROUP 231 - Transfer Case Model 231 [DHN]

Illustration Title — Group-Fig. No.

Transfer Case Assembly
Transfer Case Assembly Command Trac NVG 231 [DHN] . . . . . Fig. 231-105

Case and Related Parts
Case and Related Parts Command Trac NVG 231 [DHN] . . . . . Fig. 231-205

Gear Train
Gear Train Command Trac NVG 231 [DHN] . . . . . Fig. 231-405

Fork and Rails
Forks and Rails Command Trac NVG 231 [DHN] . . . . . Fig. 231-905

Gearshift Controls
Gearshift Controls Command Trac NVG 231 [DHN] . . . . . Fig. 231-1205

Transfer Case Assembly Command Trac NVG 231 [DHN]
Figure 231-105

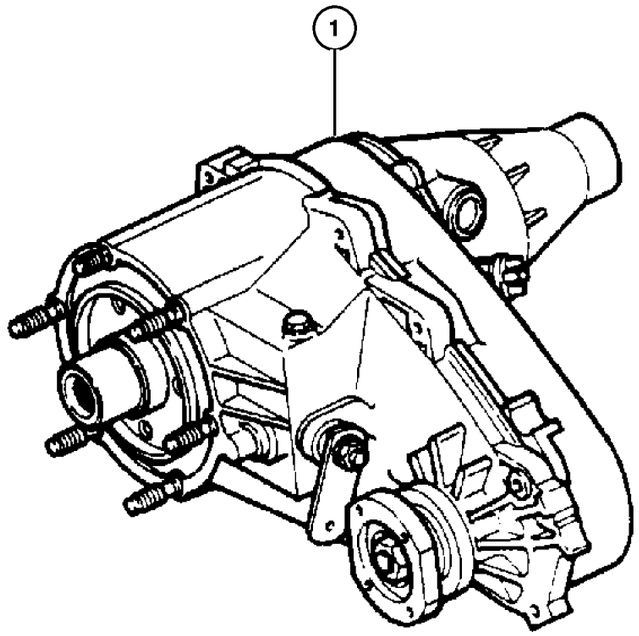

ITEM	PART NUMBER	QTY	LINE	SERIES	BODY	ENGINE	TRANS	TRIM	DESCRIPTION

NOTE:

Refer To All Proper Tag Numbers And Stamping Numbers Before Ordering Transfer Cases And/ Or Transfer Case Parts.

Sales Codes:

[DBB]=All Manual Transmissions
[DEH]=6-Speed Manual NSG370 Transmission
[DGQ]=5-Speed Automatic 5-45RFE Transmission
[DGV]=4-Speed Automatic VLP Transmission
[DG0]=All Automatic Transmissions
[DG6]=4-Speed Automatic 42RLE Transmission
[DHE]=Command-Trac H.D. Part Time NVG 241 GII Transfer Case
[DHN]=Command-Trac Part Time NVG 231 Transfer Case
[DHP]=Selec-Trac Full Time NVG 242 Transfer Case
[EKG]=3.7L ‘‘Magnum‘‘ V-6 Engine
[EK0]=All 3.7L 6-Cylinder Gas Engines
[ENR]=2.8L 4-Cylinder Turbo Diesel Engine
[EN0]=All 4/5 Cylinder Diesel Engines
[NAA]=Federal Emissions
[NAE]=California Emissions
[NAS]=50 States Emissions
[NA1]=Export Emissons
[XEF]=Transfer Case Skid Plate Sheild

1	52099 421AH	1	J, U						TRANSFER CASE, NV231

2006 Liberty (KJ)

SERIES	LINE	BODY	ENGINE	TRANSMISSION
H =HIGHLINE	T =JEEP - 2WD	74 =SPORT UTILITY 4-DR	EKG=3.7L V6 Eng.	DG6=4-Spd. Auto. 42RLE Trans.
M =MEDIUM	J =JEEP - 4WD		ENR=2.8L 4 Cyl Turbo Diesel Eng.	DGV=4-Spd. Auto. VLP Trans.
P =PREMIUM	U =JEEP - 4WD (RHD)		ENJ=2.5L 4 Cyl 16V Turbo Diesel Eng.	DGQ=5-Spd Auto. 5-45RFE Trans.
			ED1=2.4L 4 Cyl DOHC 16v SMPI Eng.	DEH=6-Speed Man. NSG370 Trans.
				DDD=5-Speed HD Man. Trans.
				DDK=5-Speed HD Man. Trans.

Case and Related Parts Command Trac NVG 231 [DHN]
Figure 231-205

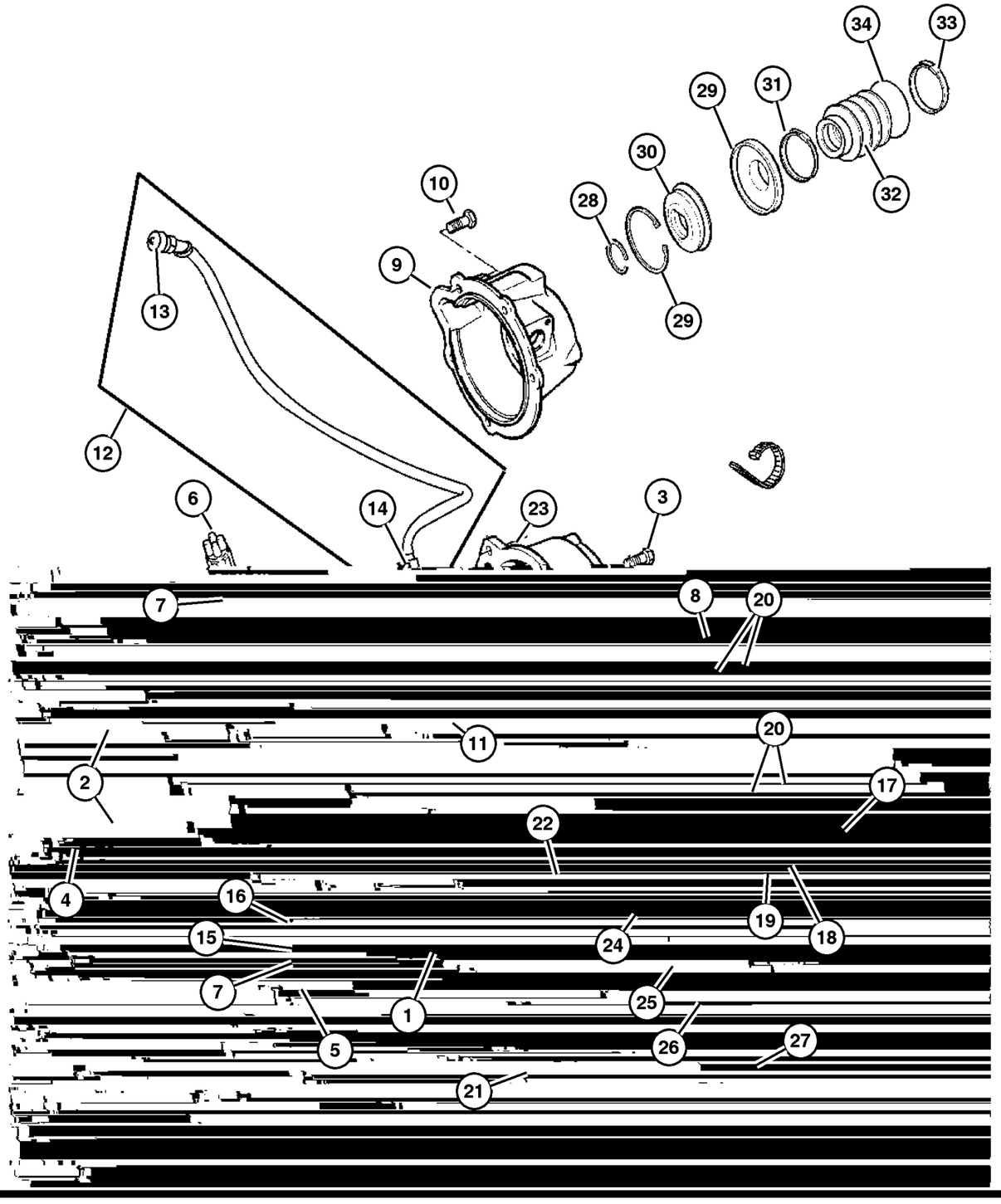

ITEM	PART NUMBER	QTY	LINE	SERIES	BODY	ENGINE	TRANS	TRIM	DESCRIPTION

NOTE:

Refer To All Proper Tag Numbers And Stamping Numbers Before Ordering Transfer Cases And/ Or Transfer Case Parts.

Sales Codes:

[DBB]=All Manual Transmissions
[DEH]=6-Speed Manual NSG370 Transmission

[DGQ]=5-Speed Automatic 5-45RFE Transmission
[DGV]=4-Speed Automatic VLP Transmission
[DG0]=All Automatic Transmissions
[DG6]=4-Speed Automatic 42RLE Transmission

[DHE]=Command-Trac H.D. Part Time NVG 241 GII Transfer Case
[DHN]=Command-Trac Part Time NVG 231 Transfer Case
[DHP]=Selec-Trac Full Time NVG 242 Transfer Case
[EKG]=3.7L ‘‘Magnum‘‘ V-6 Engine

[EK0]=All 3.7L 6-Cylinder Gas Engines
[ENR]=2.8L 4-Cylinder Turbo Diesel Engine
[EN0]=All 4/5 Cylinder Diesel Engines
[NAA]=Federal Emissions

[NAE]=California Emissions
[NAS]=50 States Emissions
[NA1]=Export Emissons
[XEF]=Transfer Case Skid Plate Sheild

ITEM	PART NUMBER	QTY	LINE	SERIES	BODY	ENGINE	TRANS	TRIM	DESCRIPTION
1	5072 322AA	1	J, U						CASE, Transfer Front
2	4167 922	6	J, U						STUD, Tranmission Case
3	J813 0979	1	J, U						BOLT, Twelve Point Head, M10x1. 5x48
4	J400 6681	6	J, U						NUT AND CONED WASHER, Hex, .375-24
5	4886 473AA	1	J, U						SCREW
6	5083 138AA	1	J, U						SWITCH, Transfer Case, 5 Position
7	4338 956	1	J, U						SEAL, Vacuum Switch
8	4210 617	5	J, U						BOLT, Transfer Case
9	5072 325AA	1	J, U						RETAINER, Transfer Case Rear
10	6501 371	9	J, U						BOLT, Retainer
11	4796 910	1	J, U						VENT, Transfer Case
12	52105 882AA	1	J, U						HOSE, vent
13	4213 328	1	J, U						VENT, Cap
14	6502 081	1	J, U						CLAMP, Oil Cooler Line
15	5003 445AA	1	J, U						SPRING, Poppet Plunger
16	5003 444AA	1	J, U						PLUNGER
17	4210 614	2	J, U						BOLT, Hex Flange Head
18	4210 983	2	J, U						WASHER, Flat
19	4116 310	2	J, U						DOWEL, Transfer Case

2006 Liberty (KJ)

SERIES	LINE	BODY	ENGINE	TRANSMISSION
H =HIGHLINE	T =JEEP - 2WD	74 =SPORT UTILITY 4-DR	EKG=3.7L V6 Eng.	DG6=4-Spd. Auto. 42RLE Trans.
M =MEDIUM	J =JEEP - 4WD		ENR=2.8L 4 Cyl Turbo Diesel Eng.	DGV=4-Spd. Auto. VLP Trans.
P =PREMIUM	U =JEEP - 4WD (RHD)		ENJ=2.5L 4 Cyl 16V Turbo Diesel Eng.	DGQ=5-Spd Auto. 5-45RFE Trans.
			ED1=2.4L 4 Cyl DOHC 16v SMPI Eng.	DEH=6-Speed Man. NSG370 Trans.
				DDD=5-Speed HD Man. Trans.
				DDK=5-Speed HD Man. Trans.

Case and Related Parts Command Trac NVG 231 [DHN]
Figure 231-205

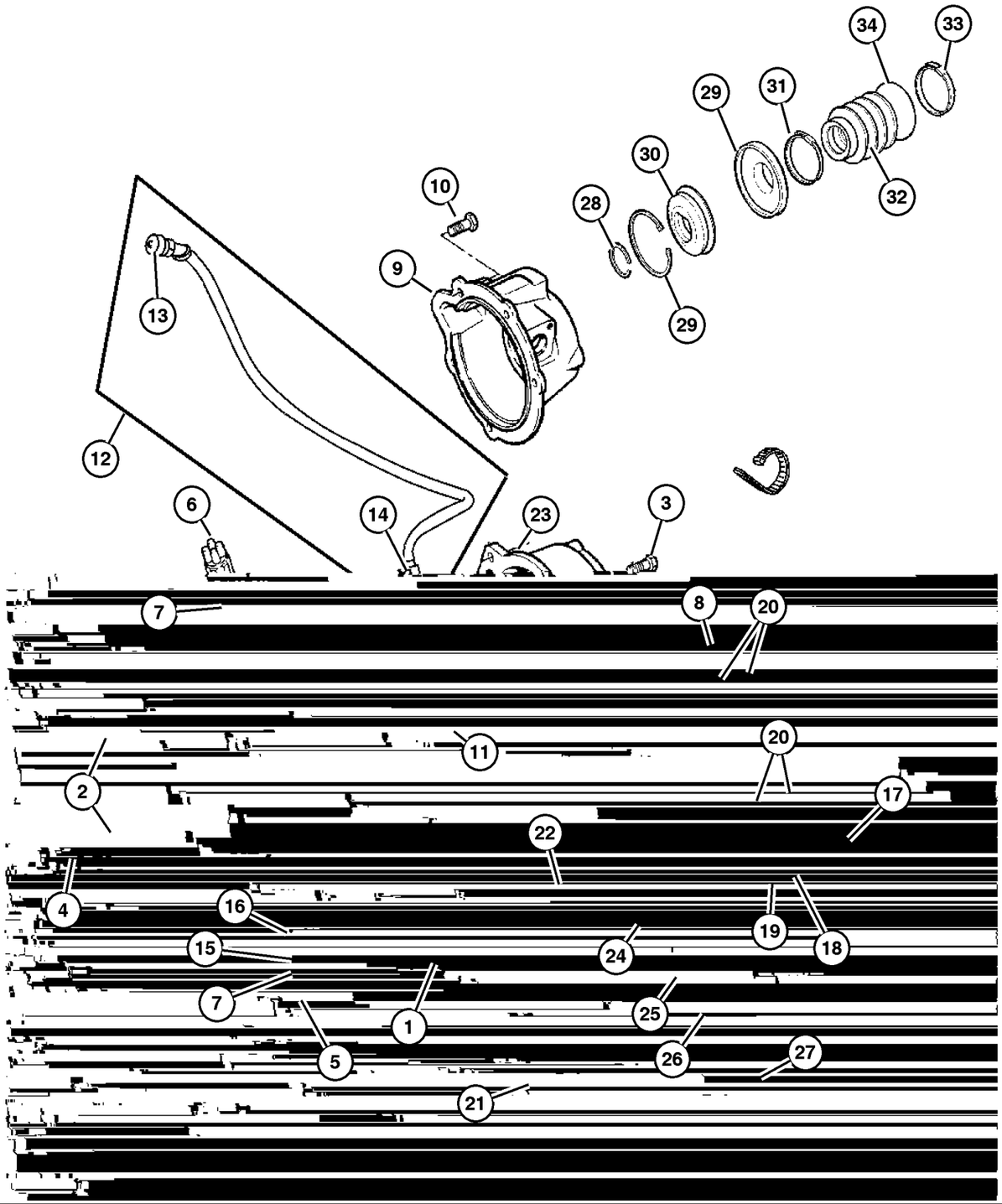

ITEM	PART NUMBER	QTY	LINE	SERIES	BODY	ENGINE	TRANS	TRIM	DESCRIPTION
20	4856 641	2	J, U						PLUG, Oil Fill
21	5010 884AA	1	J, U						SEALANT, RTV
22	3681 601	1	J, U						MAGNET, Transmission
23	4886 222AA	1	J, U						CASE, Transfer Rear
24	4338 942	1	J, U						SEAL, Oil
25	4338 941	1	J, U						TUBE, Oil Pickup
26	4338 944	1	J, U						CONNECTOR, Oil Tube Pickup
27	4338 943	1	J, U						FILTER, Transfer Case Oil
28	4883 597AA	2	J, U						SNAP RING
29	5072 306AB	1	J, U						SNAP RING
30	5072 307AA	1	J, U						SEAL, Output Shaft
31	5072 308AA	1	J, U						SLINGER, Transfer Case Flange
32	5072 310AA	1	J, U						CLAMP, Boot
33	5072 311AA	1	J, U						CLAMP, Boot
34	5072 329AB	1	J, U						BOOT, Output Shaft, None

2006 Liberty (KJ)

SERIES	LINE	BODY	ENGINE	TRANSMISSION
H =HIGHLINE	T =JEEP - 2WD	74 =SPORT UTILITY 4-DR	EKG=3.7L V6 Eng.	DG6=4-Spd. Auto. 42RLE Trans.
M =MEDIUM	J =JEEP - 4WD		ENR=2.8L 4 Cyl Turbo Diesel Eng.	DGV=4-Spd. Auto. VLP Trans.
P =PREMIUM	U =JEEP - 4WD (RHD)		ENJ=2.5L 4 Cyl 16V Turbo Diesel Eng.	DGQ=5-Spd Auto. 5-45RFE Trans.
			ED1=2.4L 4 Cyl DOHC 16v SMPI Eng.	DEH=6-Speed Man. NSG370 Trans.
				DDD=5-Speed HD Man. Trans.
				DDK=5-Speed HD Man. Trans.

Gear Train Command Trac NVG 231 [DHN]
Figure 231-405

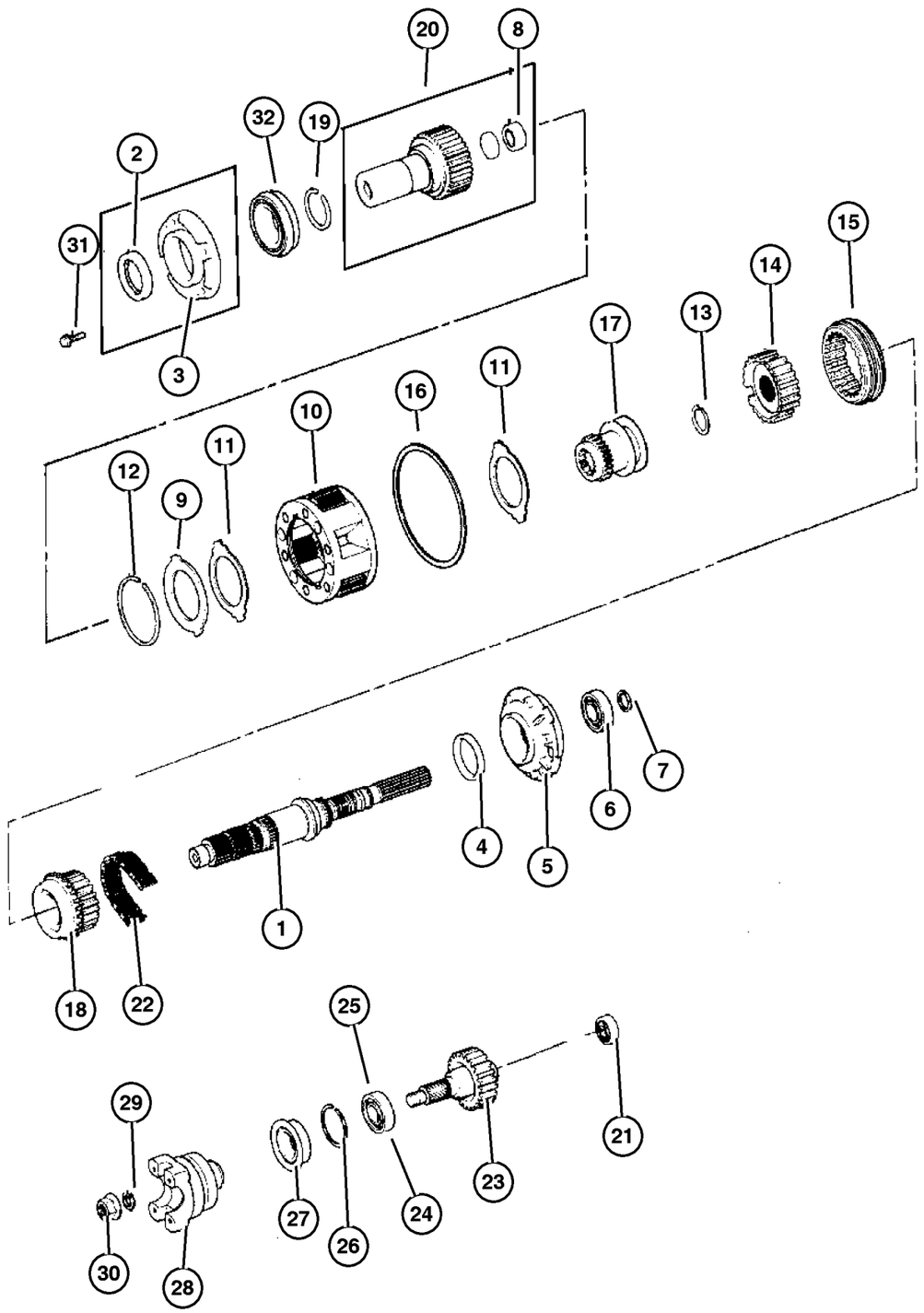

ITEM	PART NUMBER	QTY	LINE	SERIES	BODY	ENGINE	TRANS	TRIM	DESCRIPTION

NOTE:

Refer To All Proper Tag Numbers And Stamping Numbers Before Ordering Transfer Cases And/ Or Transfer Case Parts.

Sales Codes:

[DBB]=All Manual Transmissions
[DEH]=6-Speed Manual NSG370 Transmission

[DGQ]=5-Speed Automatic 5-45RFE Transmission
[DGV]=4-Speed Automatic VLP Transmission
[DG0]=All Automatic Transmissions
[DG6]=4-Speed Automatic 42RLE Transmission

[DHE]=Command-Trac H.D. Part Time NVG 241 GII Transfer Case
[DHN]=Command-Trac Part Time NVG 231 Transfer Case
[DHP]=Selec-Trac Full Time NVG 242 Transfer Case
[EKG]=3.7L "Magnum" V-6 Engine

[EK0]=All 3.7L 6-Cylinder Gas Engines
[ENR]=2.8L 4-Cylinder Turbo Diesel Engine
[EN0]=All 4/5 Cylinder Diesel Engines
[NAA]=Federal Emissions

[NAE]=California Emissions
[NAS]=50 States Emissions
[NA1]=Export Emissons
[XEF]=Transfer Case Skid Plate Sheild

ITEM	PART NUMBER	QTY	LINE	SERIES	BODY	ENGINE	TRANS	TRIM	DESCRIPTION
1	5072 345AA	1	J, U						MAINSHAFT, Transfer Case
2	5019 020AA	1	J, U						SEAL, Input Gear
3	4338 973	1	J, U						EXTENSION, Transfer Case
4	4210 603	1	J, U						SEAL, Main Shaft
5	4883 596AA	1	J, U						PUMP, Transfer Case Oil
6	4883 601AA	1	J, U						BEARING, Output Shaft
7	4883 597AA	2	J, U						SNAP RING
8	8350 3507	1	J, U						BEARING, Input Shaft
9	5019 579AA	1	J, U						PLATE
10	4796 903AB	1	J, U						PLANETARY, Transfer Case
11	4338 908	2	J, U						THRUST WASHER, Planetary Carrier
12	4338 910	1	J, U						SNAP RING
13	4338 933	1	J, U						SNAP RING
14	5159 201AA	1	J, U						HUB, Synchronizer
15	4796 909	1	J, U						SLEEVE, Mode Synchronizer
16	4219 065	1	J, U						SNAP RING, Annulus Gear
17	4897 955AA	1	J, U						SLEEVE, Range Fork
18	4796 908	1	J, U						SPROCKET, Transfer Case
19	3821 558	1	J, U						SNAP RING
20	4897 953AA	1	J, U						GEAR, Input

2006 Liberty (KJ)

SERIES	LINE	BODY	ENGINE	TRANSMISSION
H =HIGHLINE	T =JEEP - 2WD	74 =SPORT UTILITY 4-DR	EKG=3.7L V6 Eng.	DG6=4-Spd. Auto. 42RLE Trans.
M =MEDIUM	J =JEEP - 4WD		ENR=2.8L 4 Cyl Turbo Diesel Eng.	DGV=4-Spd. Auto. VLP Trans.
P =PREMIUM	U =JEEP - 4WD (RHD)		ENJ=2.5L 4 Cyl 16V Turbo Diesel Eng.	DGQ=5-Spd Auto. 5-45RFE Trans.
			ED1=2.4L 4 Cyl DOHC 16v SMPI Eng.	DEH=6-Speed Man. NSG370 Trans.
				DDD=5-Speed HD Man. Trans.
				DDK=5-Speed HD Man. Trans.

Gear Train Command Trac NVG 231 [DHN]
Figure 231-405

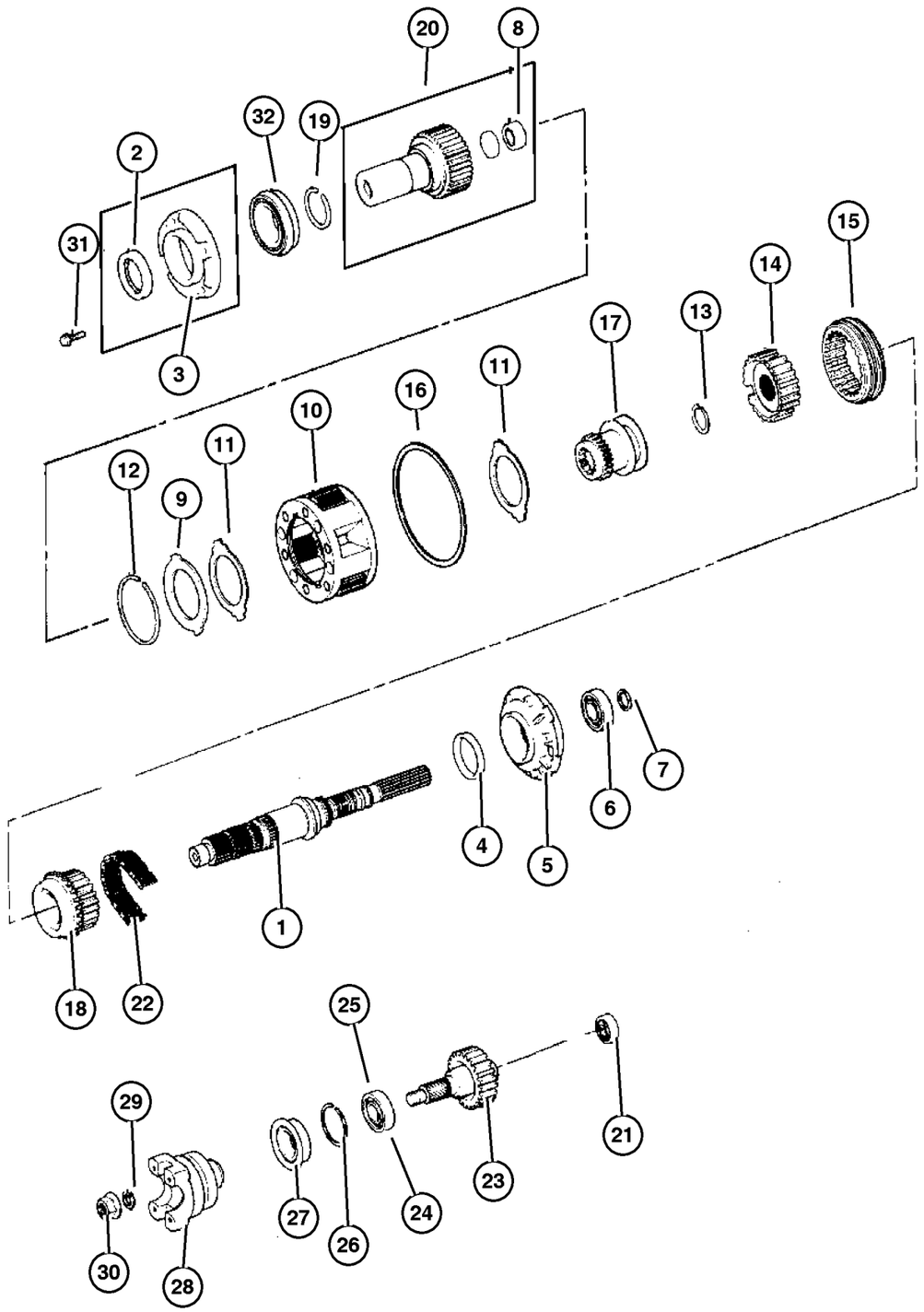

ITEM	PART NUMBER	QTY	LINE	SERIES	BODY	ENGINE	TRANS	TRIM	DESCRIPTION
21	4269 189	1	J, U						BEARING, Output Shaft
22	4338 935	1	J, U						CHAIN, Transfer Case
23	5072 324AA	1	J, U						OUTPUT SHAFT, Transfer Case
24	4883 601AA	1	J, U						BEARING, Output Shaft
25	4338 892	1	J, U						BEARING
26	4338 894	1	J, U						SNAP RING, Bearing
27	5015 847AA	1	J, U						SEAL, Output Shaft
28	5019 583AA	1	J, U						FLANGE, Driveshaft Yoke
29	4446 487	1	J, U						WASHER, Flat
30	4446 488	1	J, U						NUT, Hex Flange
31	6501 371	9	J, U						BOLT, Retainer
32	4746 155	1	J, U						BEARING, Input Gear

2006 Liberty (KJ)

SERIES	LINE	BODY	ENGINE	TRANSMISSION
H =HIGHLINE	T =JEEP - 2WD	74 =SPORT UTILITY 4-DR	EKG=3.7L V6 Eng.	DG6=4-Spd. Auto. 42RLE Trans.
M =MEDIUM	J =JEEP - 4WD		ENR=2.8L 4 Cyl Turbo Diesel Eng.	DGV=4-Spd. Auto. VLP Trans.
P =PREMIUM	U =JEEP - 4WD (RHD)		ENJ=2.5L 4 Cyl 16V Turbo Diesel Eng.	DGQ=5-Spd Auto. 5-45RFE Trans.
			ED1=2.4L 4 Cyl DOHC 16v SMPI Eng.	DEH=6-Speed Man. NSG370 Trans.
				DDD=5-Speed HD Man. Trans.
				DDK=5-Speed HD Man. Trans.

AR = Use as required - = Non illustrated part # = New this model year

Forks and Rails Command Trac NVG 231 [DHN]
Figure 231-905

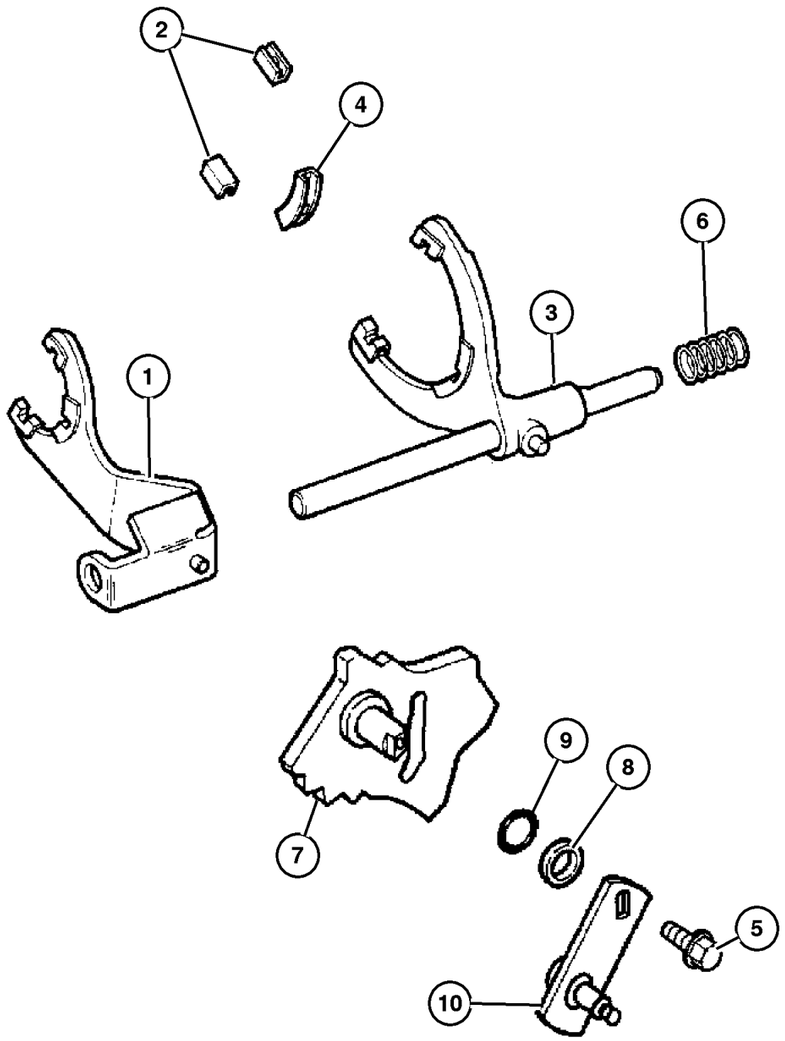

ITEM	PART NUMBER	QTY	LINE	SERIES	BODY	ENGINE	TRANS	TRIM	DESCRIPTION

NOTE:

Refer To All Proper Tag Numbers And Stamping Numbers Before Ordering Transfer Cases And/ Or Transfer Case Parts.

Sales Codes:

[DBB]=All Manual Transmissions
[DEH]=6-Speed Manual NSG370 Transmission

[DGQ]=5-Speed Automatic 5-45RFE Transmission
[DGV]=4-Speed Automatic VLP Transmission
[DG0]=All Automatic Transmissions
[DG6]=4-Speed Automatic 42RLE Transmission

[DHE]=Command-Trac H.D. Part Time NVG 241 GII Transfer Case
[DHN]=Command-Trac Part Time NVG 231 Transfer Case
[DHP]=Selec-Trac Full Time NVG 242 Transfer Case
[EKG]=3.7L ‘‘Magnum‘‘ V-6 Engine

[EK0]=All 3.7L 6-Cylinder Gas Engines
[ENR]=2.8L 4-Cylinder Turbo Diesel Engine
[EN0]=All 4/5 Cylinder Diesel Engines
[NAA]=Federal Emissions

[NAE]=California Emissions
[NAS]=50 States Emissions
[NA1]=Export Emissons
[XEF]=Transfer Case Skid Plate Sheild

1	4798 136	1	J, U						FORK, Range
2	4167 969	2	J, U						PAD, Shift Fork
3	4741 237	1	J, U						FORK, Transfer Case Mode Shift
4	4219 073	1	J, U						PAD, Shift Fork
5	5014 048AA	1	J, U						BOLT, Hex Head
6	4338 925	1	J, U						SPRING, Mode Shift Rail
7	5072 568AA	1	J, U						SECTOR, Transfer Case
8	5003 442AA	1	J, U						BEARING, Shift Lever Linkage
9	5014 046AA	1	J, U						SEAL, Sector Shaft
10	5161 498AA	1	J, U						LEVER, Selector

2006 Liberty (KJ)

SERIES	LINE	BODY	ENGINE	TRANSMISSION
H =HIGHLINE	T =JEEP - 2WD	74 =SPORT UTILITY 4-DR	EKG=3.7L V6 Eng.	DG6=4-Spd. Auto. 42RLE Trans.
M =MEDIUM	J =JEEP - 4WD		ENR=2.8L 4 Cyl Turbo Diesel Eng.	DGV=4-Spd. Auto. VLP Trans.
P =PREMIUM	U =JEEP - 4WD (RHD)		ENJ=2.5L 4 Cyl 16V Turbo Diesel Eng.	DGQ=5-Spd Auto. 5-45RFE Trans.
			ED1=2.4L 4 Cyl DOHC 16v SMPI Eng.	DEH=6-Speed Man. NSG370 Trans.
				DDD=5-Speed HD Man. Trans.
				DDK=5-Speed HD Man. Trans.

Gearshift Controls Command Trac NVG 231 [DHN]
Figure 231-1205

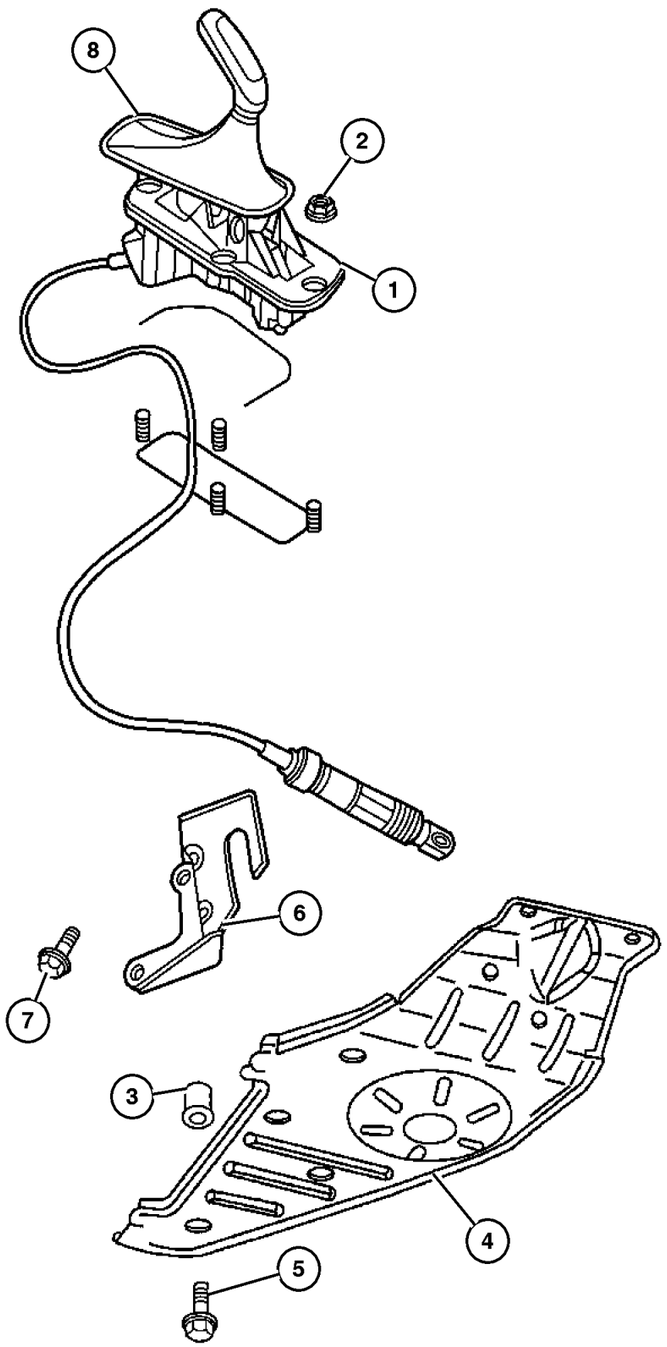

NOTE:

Refer To All Proper Tag Numbers And Stamping Numbers Before Ordering Transfer Cases And/ Or Transfer Case Parts.

Sales Codes:

[DBB]=All Manual Transmissions
[DEH]=6-Speed Manual NSG370 Transmission
[DGQ]=5-Speed Automatic 5-45RFE Transmission
[DGV]=4-Speed Automatic VLP Transmission
[DG0]=All Automatic Transmissions
[DG6]=4-Speed Automatic 42RLE Transmission
[DHE]=Command-Trac H.D. Part Time NVG 241 GII Transfer Case
[DHN]=Command-Trac Part Time NVG 231 Transfer Case
[DHP]=Selec-Trac Full Time NVG 242 Transfer Case
[EKG]=3.7L ‘‘Magnum‘‘ V-6 Engine
[EK0]=All 3.7L 6-Cylinder Gas Engines
[ENR]=2.8L 4-Cylinder Turbo Diesel Engine
[EN0]=All 4/5 Cylinder Diesel Engines
[NAA]=Federal Emissions
[NAE]=California Emissions
[NAS]=50 States Emissions
[NA1]=Export Emissons
[XEF]=Transfer Case Skid Plate Sheild

ITEM	PART NUMBER	QTY	LINE	SERIES	BODY	ENGINE	TRANS	TRIM	DESCRIPTION
1	52128 999AE	1	J, U						SHIFTER, Transfer Case
2	3420 1358	4							NUT AND WASHER, Hex Nut-Sealing Washer, M6 x 1.00
3	6506 644AA	4	J, U						RIVET
4	52129 091AA	1	J, U						PLATE, Transfer Case Skid
5	6506 644AA	4	J, U						RIVET
6	52128 956AA	1	J, U			DBB			BRACKET, Shifter
7	6101 752	3	J, U			DG0			SCREW AND WASHER, Hex Head, M10x1.5x28
8	52109 709AE	1	J, U						BOOT, Gearshift

2006 Liberty (KJ)

SERIES	LINE	BODY	ENGINE	TRANSMISSION
H =HIGHLINE	T =JEEP - 2WD	74 =SPORT UTILITY 4-DR	EKG=3.7L V6 Eng.	DG6=4-Spd. Auto. 42RLE Trans.
M =MEDIUM	J =JEEP - 4WD		ENR=2.8L 4 Cyl Turbo Diesel Eng.	DGV=4-Spd. Auto. VLP Trans.
P =PREMIUM	U =JEEP - 4WD (RHD)		ENJ=2.5L 4 Cyl 16V Turbo Diesel Eng.	DGQ=5-Spd Auto. 5-45RFE Trans.
			ED1=2.4L 4 Cyl DOHC 16v SMPI Eng.	DEH=6-Speed Man. NSG370 Trans.
				DDD=5-Speed HD Man. Trans.
				DDK=5-Speed HD Man. Trans.

Group – 241

Transfer Case Model 241 [DHE]

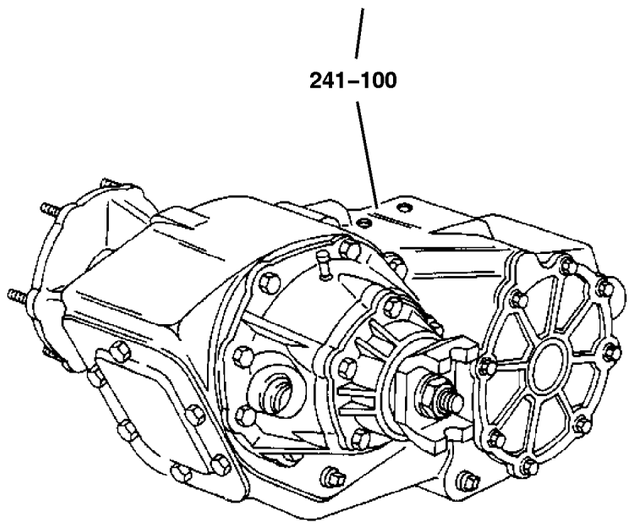

241–100 **Transfer Case Assembly** 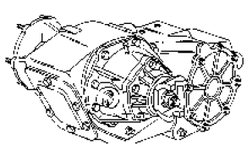	**241–200** **Case and Related Parts** 	**241–400** **Gear Train** 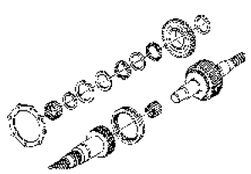	**241–900** **Fork and Rails** 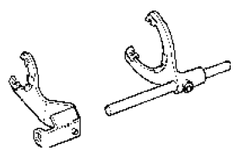
241–1200 **Gearshift Controls** 			

GROUP 241 - Transfer Case Model 241 [DHE]

Illustration Title — Group-Fig. No.

Transfer Case Assembly
Transfer Case Assembly And Identifcation NVG 241 [DHE] Manual Shift On The Fly . . . . . Fig. 241-105

Case and Related Parts
Case and Related Parts NVG 241[DHE] Manual Shift On The Fly . . . . . Fig. 241-205

Gear Train
Gear Train NVG 241 [DHE] Manual Shift On The Fly . . . . . Fig. 241-405

Fork and Rails
Forks And Rails NVG 241 [DHE] Manual Shift On The Fly . . . . . Fig. 241-905

Gearshift Controls
Shift Controls NVG 241 [DHE] Manual Shift On The Fly . . . . . Fig. 241-1205

Transfer Case Assembly And Identifcation NVG 241 [DHE] Manual Shift On The Fly
Figure 241-105

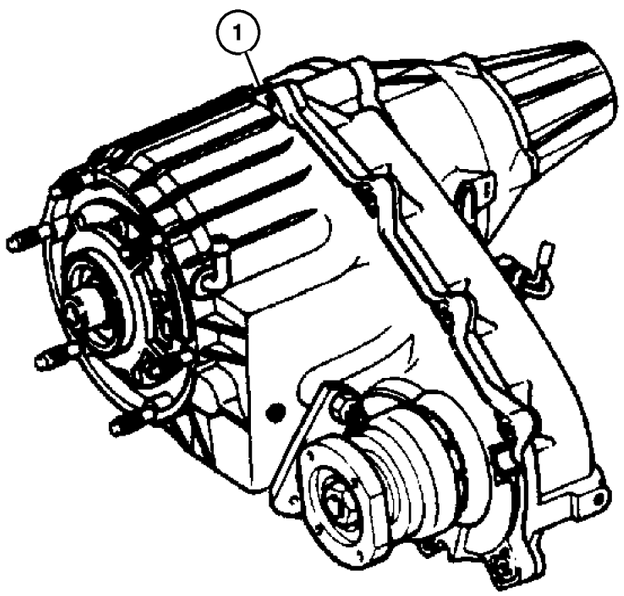

ITEM	PART NUMBER	QTY	LINE	SERIES	BODY	ENGINE	TRANS	TRIM	DESCRIPTION
NOTE:									
Refer To All Proper Tag Numbers And Stamping Numbers Before Ordering Transfer Cases And/ Or Transfer Case Parts.									
Sales Codes:									
[DBB]=All Manual Transmissions									
[DEH]=6-Speed Manual NSG370 Transmission									
[DGQ]=5-Speed Automatic 5-45RFE Transmission									
[DGV]=4-Speed Automatic VLP Transmission									
[DG0]=All Automatic Transmissions									
[DG6]=4-Speed Automatic 42RLE Transmission									
[DHE]=Command-Trac H.D. Part Time NVG 241 GII Transfer Case									
[DHN]=Command-Trac Part Time NVG 231 Transfer Case									
[DHP]=Selec-Trac Full Time NVG 242 Transfer Case									
[EKG]=3.7L ‘‘Magnum‘‘ V-6 Engine									
[EK0]=All 3.7L 6-Cylinder Gas Engines									
[ENR]=2.8L 4-Cylinder Turbo Diesel Engine									
[EN0]=All 4/5 Cylinder Diesel Engines									
[NAA]=Federal Emissions									
[NAE]=California Emissions									
[NAS]=50 States Emissions									
[NA1]=Export Emissons									
[XEF]=Transfer Case Skid Plate Sheild									
1	52853 311AC	1	J, U						TRANSFER CASE, NP241

2006 Liberty (KJ)

SERIES	LINE	BODY	ENGINE	TRANSMISSION
H =HIGHLINE	T =JEEP - 2WD	74 =SPORT UTILITY 4-DR	EKG=3.7L V6 Eng.	DG6=4-Spd. Auto. 42RLE Trans.
M =MEDIUM	J =JEEP - 4WD		ENR=2.8L 4 Cyl Turbo Diesel Eng.	DGV=4-Spd. Auto. VLP Trans.
P =PREMIUM	U =JEEP - 4WD (RHD)		ENJ=2.5L 4 Cyl 16V Turbo Diesel Eng.	DGQ=5-Spd Auto. 5-45RFE Trans.
			ED1=2.4L 4 Cyl DOHC 16v SMPI Eng.	DEH=6-Speed Man. NSG370 Trans.
				DDD=5-Speed HD Man. Trans.
				DDK=5-Speed HD Man. Trans.

Case and Related Parts NVG 241[DHE] Manual Shift On The Fly
Figure 241-205

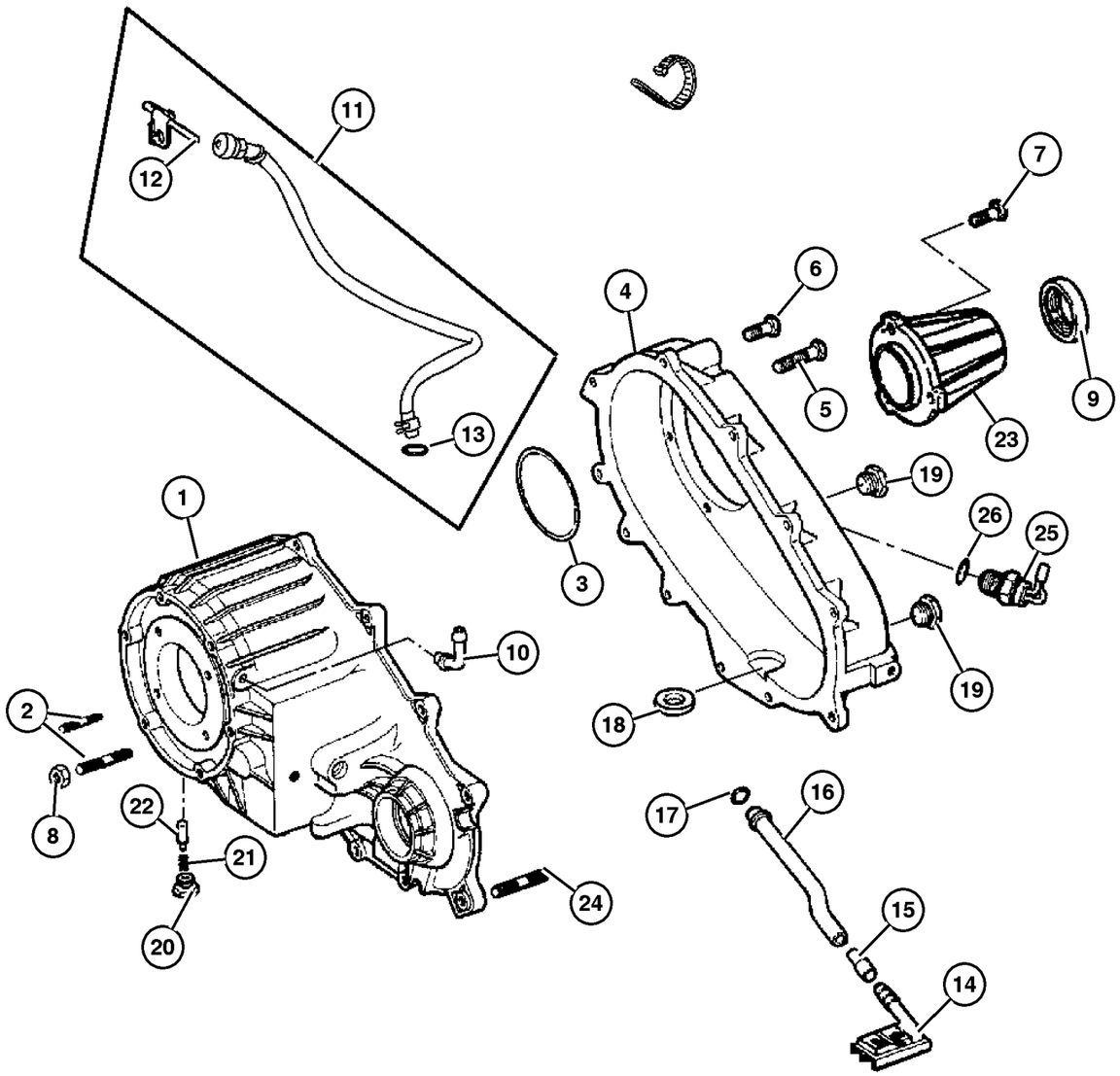

ITEM	PART NUMBER	QTY	LINE	SERIES	BODY	ENGINE	TRANS	TRIM	DESCRIPTION

NOTE:

Refer To All Proper Tag Numbers And Stamping Numbers Before Ordering Transfer Cases And/ Or Transfer Case Parts.

Sales Codes:

[DBB]=All Manual Transmissions
[DEH]=6-Speed Manual NSG370 Transmission

[DGQ]=5-Speed Automatic 5-45RFE Transmission
[DGV]=4-Speed Automatic VLP Transmission
[DG0]=All Automatic Transmissions
[DG6]=4-Speed Automatic 42RLE Transmission

[DHE]=Command-Trac H.D. Part Time NVG 241 GII Transfer Case
[DHN]=Command-Trac Part Time NVG 231 Transfer Case
[DHP]=Selec-Trac Full Time NVG 242 Transfer Case
[EKG]=3.7L ‘‘Magnum‘‘ V-6 Engine

[EK0]=All 3.7L 6-Cylinder Gas Engines
[ENR]=2.8L 4-Cylinder Turbo Diesel Engine
[EN0]=All 4/5 Cylinder Diesel Engines
[NAA]=Federal Emissions

[NAE]=California Emissions
[NAS]=50 States Emissions
[NA1]=Export Emissons
[XEF]=Transfer Case Skid Plate Sheild

ITEM	PART NUMBER	QTY	LINE	SERIES	BODY	ENGINE	TRANS	TRIM	DESCRIPTION
1	5159 099AA	1	J, U						CASE, Transfer Front
2	4167 922	6	J, U						STUD, Tranmission Case
3	4219 065	1	J, U						SNAP RING, Annulus Gear
4	5080 221AA	1	J, U						CASE, Transfer Case Rear
5	5080 859AA	1	J, U						BOLT, Hex Flange Head
6	6101 526	17	J, U						BOLT, Transfer Case, [M8X1.25X35.00]
7	5101 858AA	6	J, U						BOLT, Retainer
8	J400 6681	6	J, U						NUT AND CONED WASHER, Hex, .375-24
9	5019 026AA	1	J, U						SEAL, Output Shaft
10	4796 910	1	J, U						VENT, Transfer Case
11	52105 882AA	1	J, U						HOSE, vent
12	4213 328	1	J, U						VENT, Cap
13	6502 081	1	J, U						CLAMP, Oil Cooler Line
14	5012 326AA	1	J, U						FILTER, Transfer Case Oil
15	5012 327AA	1	J, U						CONNECTOR, Oil Tube Pickup
16	5080 223AA	1	J, U						TUBE, Oil Pickup
17	5013 016AB	1	J, U						SEAL, Transfer Case
18	5080 218AA	1	J, U						MAGNET
19	4856 641	2	J, U						PLUG, Oil Fill

2006 Liberty (KJ)

SERIES	LINE	BODY	ENGINE	TRANSMISSION
H =HIGHLINE	T =JEEP - 2WD	74 =SPORT UTILITY 4-DR	EKG=3.7L V6 Eng.	DG6=4-Spd. Auto. 42RLE Trans.
M =MEDIUM	J =JEEP - 4WD		ENR=2.8L 4 Cyl Turbo Diesel Eng.	DGV=4-Spd. Auto. VLP Trans.
P =PREMIUM	U =JEEP - 4WD (RHD)		ENJ=2.5L 4 Cyl 16V Turbo Diesel Eng.	DGQ=5-Spd Auto. 5-45RFE Trans.
			ED1=2.4L 4 Cyl DOHC 16v SMPI Eng.	DEH=6-Speed Man. NSG370 Trans.
				DDD=5-Speed HD Man. Trans.
				DDK=5-Speed HD Man. Trans.

Case and Related Parts NVG 241[DHE] Manual Shift On The Fly
Figure 241-205

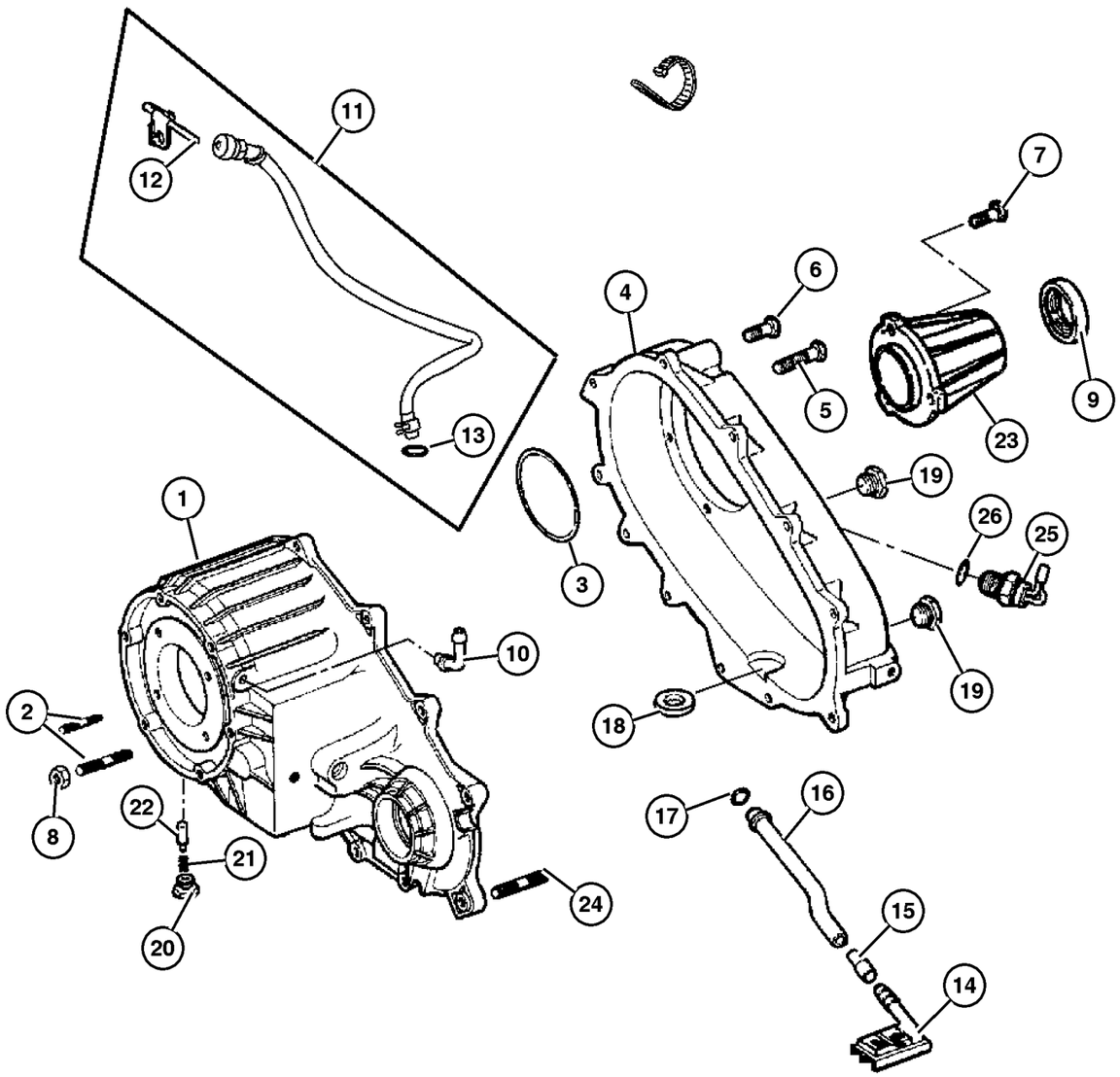

ITEM	PART NUMBER	QTY	LINE	SERIES	BODY	ENGINE	TRANS	TRIM	DESCRIPTION
20	4886 473AA	1	J, U						SCREW
21	4638 497	1	J, U						SPRING, Shift Detent
22	5300 8217	1	J, U						PLUNGER
23	5080 386AA	1	J, U						EXTENSION, Transfer Case
24	5222 757	2	J, U						DOWEL
25	5083 138AA	1	J, U						SWITCH, Transfer Case, 5 Position
26	4338 956	1	J, U						SEAL, Vacuum Switch
-27	5010 884AA-	1	J, U						SEALANT, RTV

2006 Liberty (KJ)

SERIES	LINE	BODY	ENGINE	TRANSMISSION
H =HIGHLINE	T =JEEP - 2WD	74 =SPORT UTILITY 4-DR	EKG=3.7L V6 Eng.	DG6=4-Spd. Auto. 42RLE Trans.
M =MEDIUM	J =JEEP - 4WD		ENR=2.8L 4 Cyl Turbo Diesel Eng.	DGV=4-Spd. Auto. VLP Trans.
P =PREMIUM	U =JEEP - 4WD (RHD)		ENJ=2.5L 4 Cyl 16V Turbo Diesel Eng.	DGQ=5-Spd Auto. 5-45RFE Trans.
			ED1=2.4L 4 Cyl DOHC 16v SMPI Eng.	DEH=6-Speed Man. NSG370 Trans.
				DDD=5-Speed HD Man. Trans.
				DDK=5-Speed HD Man. Trans.

AR = Use as required - = Non illustrated part # = New this model year

Gear Train NVG 241 [DHE] Manual Shift On The Fly
Figure 241-405

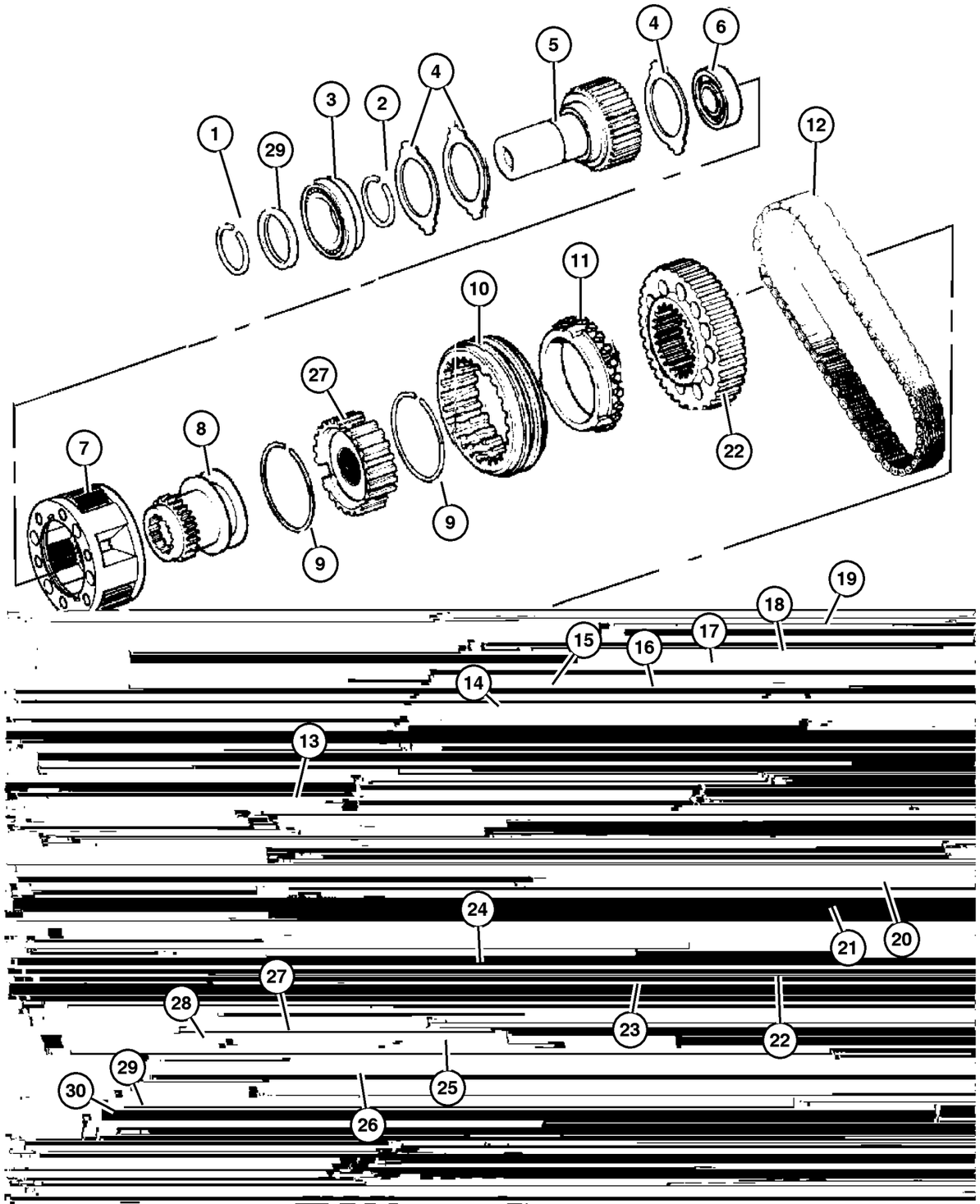

ITEM	PART NUMBER	QTY	LINE	SERIES	BODY	ENGINE	TRANS	TRIM	DESCRIPTION

NOTE:

Refer To All Proper Tag Numbers And Stamping Numbers Before Ordering Transfer Cases And/ Or Transfer Case Parts.

Sales Codes:

[DBB]=All Manual Transmissions
[DEH]=6-Speed Manual NSG370 Transmission

[DGQ]=5-Speed Automatic 5-45RFE Transmission
[DGV]=4-Speed Automatic VLP Transmission
[DG0]=All Automatic Transmissions
[DG6]=4-Speed Automatic 42RLE Transmission

[DHE]=Command-Trac H.D. Part Time NVG 241 GII Transfer Case
[DHN]=Command-Trac Part Time NVG 231 Transfer Case
[DHP]=Selec-Trac Full Time NVG 242 Transfer Case
[EKG]=3.7L "Magnum" V-6 Engine

[EK0]=All 3.7L 6-Cylinder Gas Engines
[ENR]=2.8L 4-Cylinder Turbo Diesel Engine
[EN0]=All 4/5 Cylinder Diesel Engines
[NAA]=Federal Emissions

[NAE]=California Emissions
[NAS]=50 States Emissions
[NA1]=Export Emissons
[XEF]=Transfer Case Skid Plate Sheild

ITEM	PART NUMBER	QTY	LINE	SERIES	BODY	ENGINE	TRANS	TRIM	DESCRIPTION
1	5072 460AA	1	J, U						SNAP RING
2	5072 459AA	1	J, U						SNAP RING
3	5072 458AA	1	J, U						BEARING, Input Gear
4	4338 908	2	J, U						THRUST WASHER, Planetary Carrier
5	5072 464AA	1	J, U						GEAR, Input
6	5080 499AA	1	J, U						BEARING, Input Gear
7	4796 903AB	1	J, U						PLANETARY, Transfer Case
8	5086 104AA	1	J, U						SLEEVE, Shift Range
9	5080 503AA	1	J, U						SNAP RING, Clutch Gear
10	5080 207AA	1	J, U						SLEEVE, Mode Synchronizer
11	5080 504AA	1	J, U						HUB, Synchronizer
12	5012 322AB	1	J, U						CHAIN, Transfer Case
13	5080 180AA	1	J, U						MAINSHAFT, Transfer Case
14	5101 858AA	6	J, U						BOLT, Retainer
15	5101 878AA	1	J, U						HOUSING, Pump
16	5101 879AA	1	J, U						ROTOR, Inner
17	5101 880AA	1	J, U						ROTOR, Outer
18	4897 981AA	1	J, U						BEARING, Output Shaft
19	6025 755	1	J, U						SNAP RING, 1.28 ID
20	4269 189	1	J, U						BEARING, Output Shaft

2006 Liberty (KJ)

SERIES	LINE	BODY	ENGINE	TRANSMISSION
H =HIGHLINE	T =JEEP - 2WD	74 =SPORT UTILITY 4-DR	EKG=3.7L V6 Eng.	DG6=4-Spd. Auto. 42RLE Trans.
M =MEDIUM	J =JEEP - 4WD		ENR=2.8L 4 Cyl Turbo Diesel Eng.	DGV=4-Spd. Auto. VLP Trans.
P =PREMIUM	U =JEEP - 4WD (RHD)		ENJ=2.5L 4 Cyl 16V Turbo Diesel Eng.	DGQ=5-Spd Auto. 5-45RFE Trans.
			ED1=2.4L 4 Cyl DOHC 16v SMPI Eng.	DEH=6-Speed Man. NSG370 Trans.
				DDD=5-Speed HD Man. Trans.
				DDK=5-Speed HD Man. Trans.

Gear Train NVG 241 [DHE] Manual Shift On The Fly
Figure 241-405

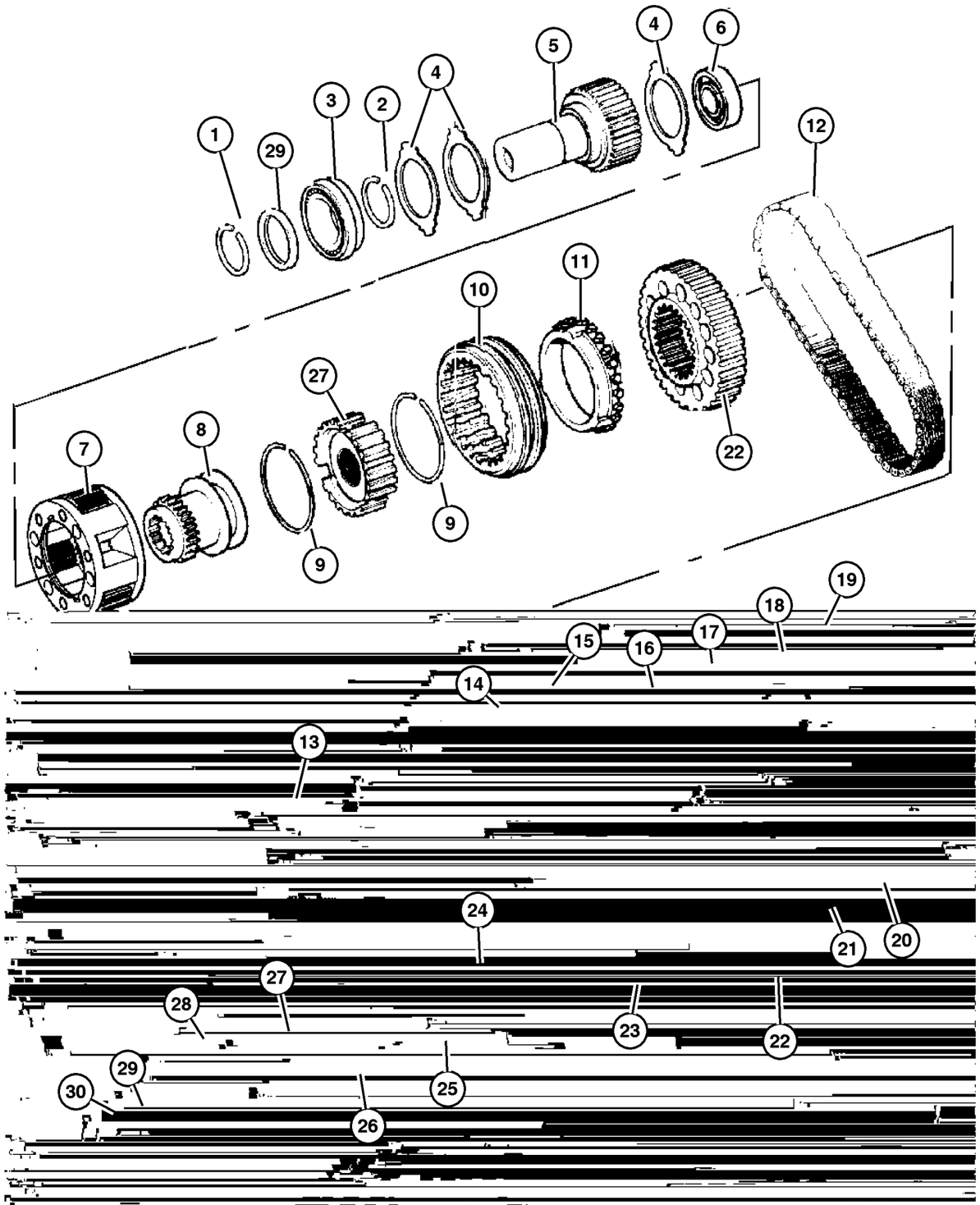

ITEM	PART NUMBER	QTY	LINE	SERIES	BODY	ENGINE	TRANS	TRIM	DESCRIPTION
21	5080 503AA	1	J, U						SNAP RING, Clutch Gear
22	5159 110AA	1	J, U						SPROCKET, Transfer Case
23	5093 602AA	1	J, U						OUTPUT SHAFT, Transfer Case
24	5072 459AA	1	J, U						SNAP RING
25	4897 981AA	1	J, U						BEARING, Output Shaft, Front Output
26	4798 125	1	J, U						SEAL, Output Shaft
27	5093 605AA	1	J, U						SLEEVE, Wear
28	5103 223AA	1	J, U						FLANGE, Driveshaft Yoke
29	4210 973	1	J, U						WASHER, Transfer Case Yoke
30	4167 924	1	J, U						NUT, Transfer Case Yoke

2006 Liberty (KJ)

SERIES	LINE	BODY	ENGINE	TRANSMISSION
H =HIGHLINE	T =JEEP - 2WD	74 =SPORT UTILITY 4-DR	EKG=3.7L V6 Eng.	DG6=4-Spd. Auto. 42RLE Trans.
M =MEDIUM	J =JEEP - 4WD		ENR=2.8L 4 Cyl Turbo Diesel Eng.	DGV=4-Spd. Auto. VLP Trans.
P =PREMIUM	U =JEEP - 4WD (RHD)		ENJ=2.5L 4 Cyl 16V Turbo Diesel Eng.	DGQ=5-Spd Auto. 5-45RFE Trans.
			ED1=2.4L 4 Cyl DOHC 16v SMPI Eng.	DEH=6-Speed Man. NSG370 Trans.
				DDD=5-Speed HD Man. Trans.
				DDK=5-Speed HD Man. Trans.

AR = Use as required - = Non illustrated part # = New this model year

Forks And Rails NVG 241 [DHE] Manual Shift On The Fly
Figure 241-905

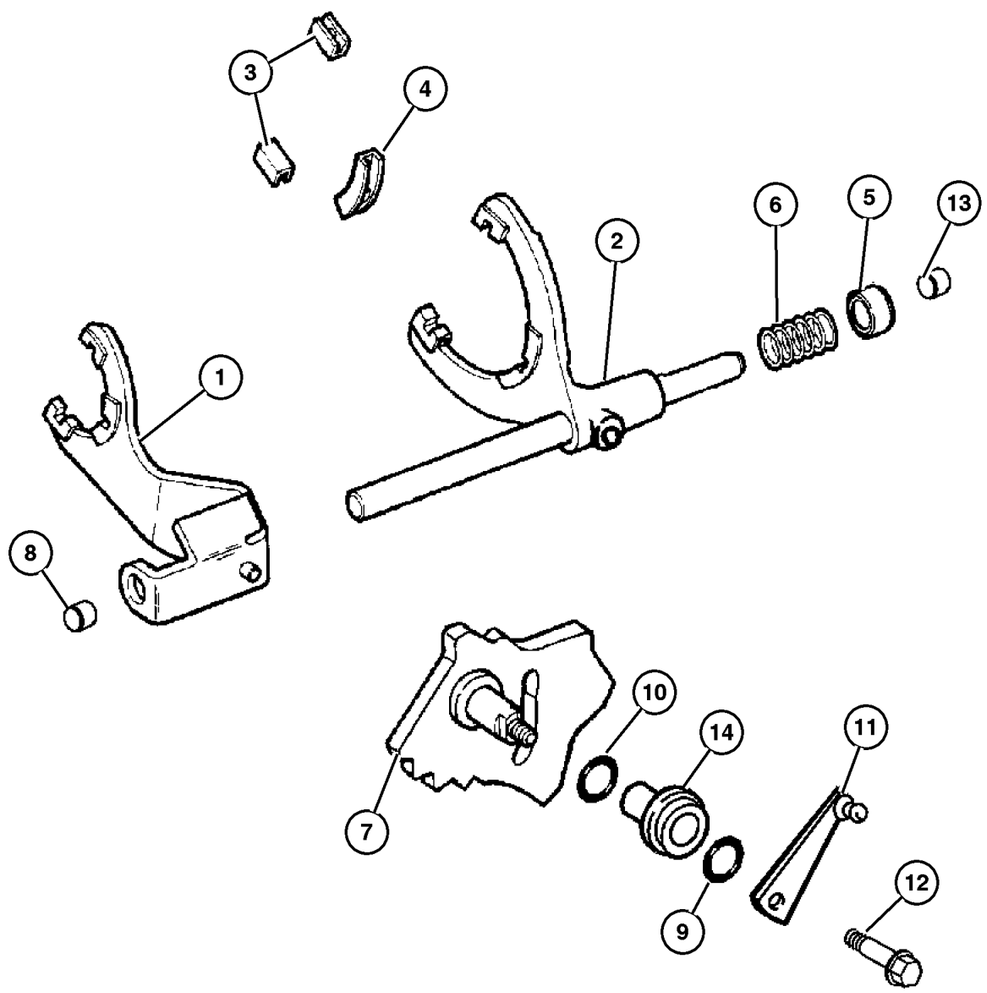

ITEM	PART NUMBER	QTY	LINE	SERIES	BODY	ENGINE	TRANS	TRIM	DESCRIPTION
1	4798 136	1	J, U						FORK, Range
2	5080 158AA	1	J, U						FORK, Transfer Case Mode Shift
3	4167 969	2	J, U						PAD, Shift Fork
4	4219 073	1	J, U						PAD, Shift Fork
5	8350 3515	1	J, U						CUP, Shift Fork Spring
6	0013 816	1	J, U						SPRING, Mode Fork
7	5159 105AA	1	J, U						SECTOR, Transfer Case
8	4338 945	1	J, U						BUSHING, Shift Rail
9	5014 046AA	1	J, U						SEAL, Sector Shaft
10	5080 761AA	1	J, U						SEAL, Gearshift Lever
11	5159 109AA	1	J, U						LEVER, Transfer Case
12	5014 048AA	1	J, U						BOLT, Hex Head
13	4338 945	1	J, U						BUSHING, Shift Rail
14	5080 760AA	1	J, U						SUPPORT, Gearshift Lever

2006 Liberty (KJ)

SERIES	LINE	BODY	ENGINE	TRANSMISSION
H =HIGHLINE	T =JEEP - 2WD	74 =SPORT UTILITY 4-DR	EKG=3.7L V6 Eng.	DG6=4-Spd. Auto. 42RLE Trans.
M =MEDIUM	J =JEEP - 4WD		ENR=2.8L 4 Cyl Turbo Diesel Eng.	DGV=4-Spd. Auto. VLP Trans.
P =PREMIUM	U =JEEP - 4WD (RHD)		ENJ=2.5L 4 Cyl 16V Turbo Diesel Eng.	DGQ=5-Spd Auto. 5-45RFE Trans.
			ED1=2.4L 4 Cyl DOHC 16v SMPI Eng.	DEH=6-Speed Man. NSG370 Trans.
				DDD=5-Speed HD Man. Trans.
				DDK=5-Speed HD Man. Trans.

AR = Use as required - = Non illustrated part # = New this model year

Shift Controls NVG 241 [DHE] Manual Shift On The Fly
Figure 241-1205

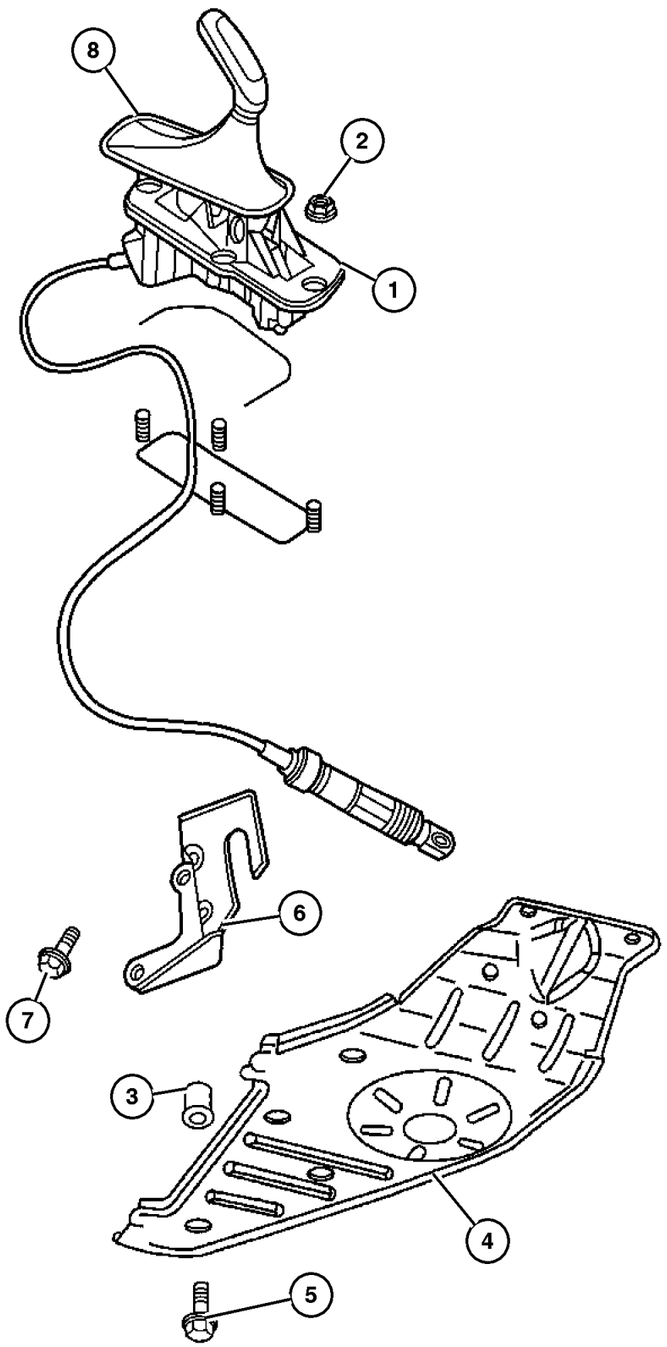

ITEM	PART NUMBER	QTY	LINE	SERIES	BODY	ENGINE	TRANS	TRIM	DESCRIPTION
NOTE:									
Refer To All Proper Tag Numbers And Stamping Numbers Before Ordering Transfer Cases And/ Or Transfer Case Parts.									
Sales Codes:									
[DBB]=All Manual Transmissions									
[DEH]=6-Speed Manual NSG370 Transmission									
[DGQ]=5-Speed Automatic 5-45RFE Transmission									
[DGV]=4-Speed Automatic VLP Transmission									
[DG0]=All Automatic Transmissions									
[DG6]=4-Speed Automatic 42RLE Transmission									
[DHE]=Command-Trac H.D. Part Time NVG 241 GII Transfer Case									
[DHN]=Command-Trac Part Time NVG 231 Transfer Case									
[DHP]=Selec-Trac Full Time NVG 242 Transfer Case									
[EKG]=3.7L ‘‘Magnum‘‘ V-6 Engine									
[EK0]=All 3.7L 6-Cylinder Gas Engines									
[ENR]=2.8L 4-Cylinder Turbo Diesel Engine									
[EN0]=All 4/5 Cylinder Diesel Engines									
[NAA]=Federal Emissions									
[NAE]=California Emissions									
[NAS]=50 States Emissions									
[NA1]=Export Emissons									
[XEF]=Transfer Case Skid Plate Sheild									
1	52128 999AG	1	J, U						SHIFTER, Transfer Case
2	3420 1358	4							NUT AND WASHER, Hex Nut-Sealing Washer, M6 x 1.00, Transfer Case Cover To Floor Pan, Mounting
3	6506 644AA	4	J, U						RIVET, [M10X1.50X17.7], Transfer Case Skid Plate, Mounting
4	52129 091AA	1	J, U						PLATE, Transfer Case Skid
5	6506 027AA	4	J, U						SCREW, Hex Head, [M10X1.50X40.00], Transfer Case Skid Plate To Body, Mounting
6									BRACKET, Shifter
	52128 954AB	1	J, U				DG6, DGV		
	52128 955AB	1	J, U				DGQ		
	52128 956AB	1	J, U				DBB		
7	6101 752	3	J, U				DG0		SCREW AND WASHER, Hex Head, M10x1.5x28, Transfer Case Bracket, Mounting
8	52109 709AE	1	J, U						BOOT, Gearshift

2006 Liberty (KJ)

SERIES	LINE	BODY	ENGINE	TRANSMISSION
H =HIGHLINE	T =JEEP - 2WD	74 =SPORT UTILITY 4-DR	EKG=3.7L V6 Eng.	DG6=4-Spd. Auto. 42RLE Trans.
M =MEDIUM	J =JEEP - 4WD		ENR=2.8L 4 Cyl Turbo Diesel Eng.	DGV=4-Spd. Auto. VLP Trans.
P =PREMIUM	U =JEEP - 4WD (RHD)		ENJ=2.5L 4 Cyl 16V Turbo Diesel Eng.	DGQ=5-Spd Auto. 5-45RFE Trans.
			ED1=2.4L 4 Cyl DOHC 16v SMPI Eng.	DEH=6-Speed Man. NSG370 Trans.
				DDD=5-Speed HD Man. Trans.
				DDK=5-Speed HD Man. Trans.

Group – 242

Transfer Case Model 242 [DHP]

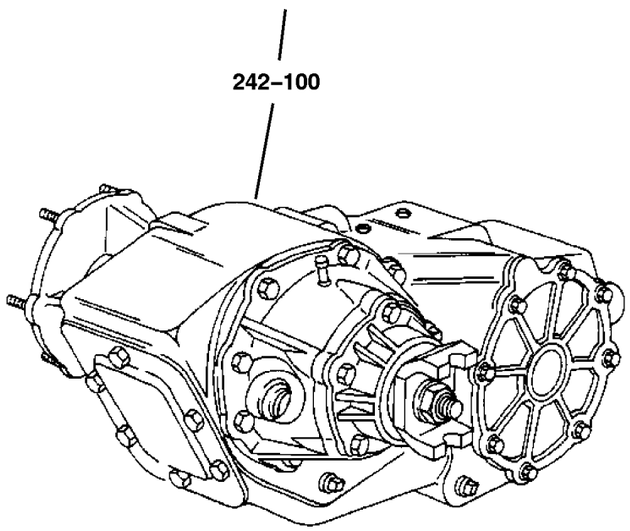

242–100 Transfer Case Assembly 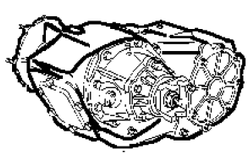	**242–200** Case and Related Parts 	**242–400** Gear Train 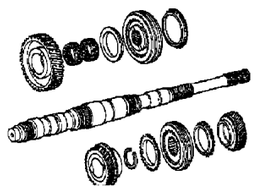	**242–900** Fork and Rails 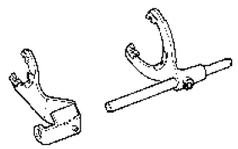
242–1200 Gearshift Controls 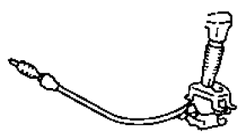			

GROUP 242 - Transfer Case Model 242 [DHP]

Illustration Title — Group-Fig. No.

Transfer Case Assembly
Transfer Case NVG 242 [DHP] . . . . . Fig. 242-105

Case and Related Parts
Case and Related Parts Select Trac NVG 242 [DHP] . . . . . Fig. 242-205

Gear Train
Gear Train Select Trac NVG 242 [DHP] . . . . . Fig. 242-405

Fork and Rails
Forks and Rails Select Trac NVG 242 [DHP] . . . . . Fig. 242-905

Gearshift Controls
Gearshift Controls NVG 242 [DHP] . . . . . Fig. 242-1205

Transfer Case NVG 242 [DHP]
Figure 242-105

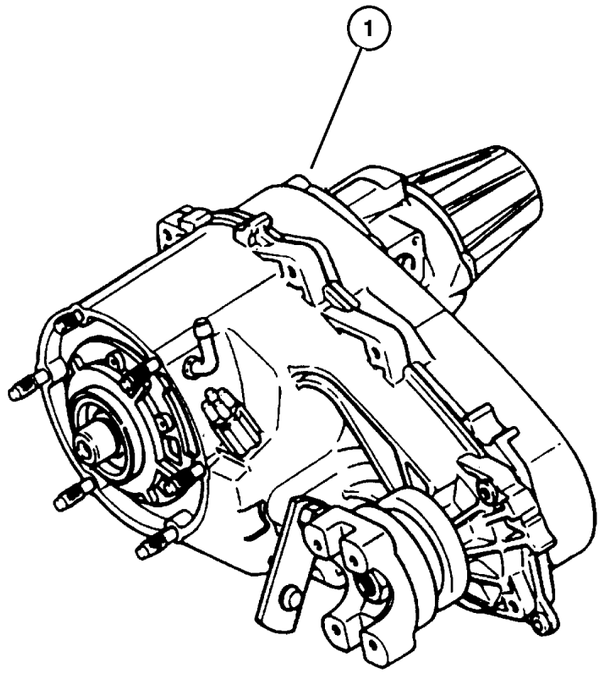

ITEM	PART NUMBER	QTY	LINE	SERIES	BODY	ENGINE	TRANS	TRIM	DESCRIPTION

NOTE:

Refer To All Proper Tag Numbers And Stamping Numbers Before Ordering Transfer Cases And/ Or Transfer Case Parts.

Sales Codes:

[DBB]=All Manual Transmissions
[DEH]=6-Speed Manual NSG370 Transmission

[DGQ]=5-Speed Automatic 5-45RFE Transmission
[DGV]=4-Speed Automatic VLP Transmission
[DG0]=All Automatic Transmissions
[DG6]=4-Speed Automatic 42RLE Transmission

[DHE]=Command-Trac H.D. Part Time NVG 241 GII Transfer Case
[DHN]=Command-Trac Part Time NVG 231 Transfer Case
[DHP]=Selec-Trac Full Time NVG 242 Transfer Case
[EKG]=3.7L ‘‘Magnum‘‘ V-6 Engine

[EK0]=All 3.7L 6-Cylinder Gas Engines
[ENR]=2.8L 4-Cylinder Turbo Diesel Engine
[EN0]=All 4/5 Cylinder Diesel Engines
[NAA]=Federal Emissions

[NAE]=California Emissions
[NAS]=50 States Emissions
[NA1]=Export Emissons
[XEF]=Transfer Case Skid Plate Sheild

1	52853 123AD	1	J, U						TRANSFER CASE, NP242

2006 Liberty (KJ)

SERIES	LINE	BODY	ENGINE	TRANSMISSION
H =HIGHLINE	T =JEEP - 2WD	74 =SPORT UTILITY 4-DR	EKG=3.7L V6 Eng.	DG6=4-Spd. Auto. 42RLE Trans.
M =MEDIUM	J =JEEP - 4WD		ENR=2.8L 4 Cyl Turbo Diesel Eng.	DGV=4-Spd. Auto. VLP Trans.
P =PREMIUM	U =JEEP - 4WD (RHD)		ENJ=2.5L 4 Cyl 16V Turbo Diesel Eng.	DGQ=5-Spd Auto. 5-45RFE Trans.
			ED1=2.4L 4 Cyl DOHC 16v SMPI Eng.	DEH=6-Speed Man. NSG370 Trans.
				DDD=5-Speed HD Man. Trans.
				DDK=5-Speed HD Man. Trans.

Case and Related Parts Select Trac NVG 242 [DHP]
Figure 242-205

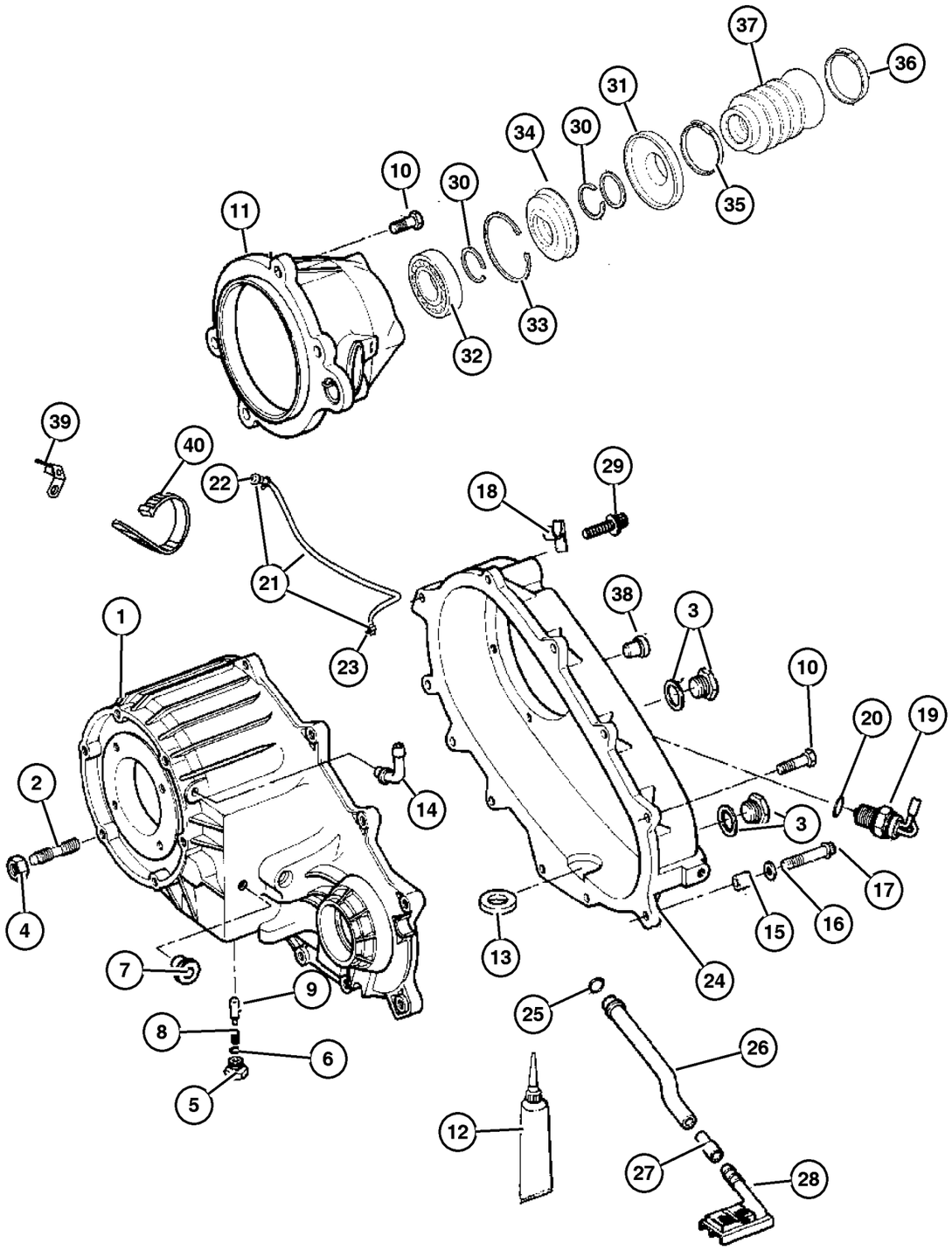

ITEM	PART NUMBER	QTY	LINE	SERIES	BODY	ENGINE	TRANS	TRIM	DESCRIPTION
NOTE:									
Refer To All Proper Tag Numbers And Stamping Numbers Before Ordering Transfer Cases And/ Or Transfer Case Parts.									
Sales Codes:									
[DBB]=All Manual Transmissions									
[DEH]=6-Speed Manual NSG370 Transmission									
[DGQ]=5-Speed Automatic 5-45RFE Transmission									
[DGV]=4-Speed Automatic VLP Transmission									
[DG0]=All Automatic Transmissions									
[DG6]=4-Speed Automatic 42RLE Transmission									
[DHE]=Command-Trac H.D. Part Time NVG 241 GII Transfer Case									
[DHN]=Command-Trac Part Time NVG 231 Transfer Case									
[DHP]=Selec-Trac Full Time NVG 242 Transfer Case									
[EKG]=3.7L ‘‘Magnum‘‘ V-6 Engine									
[EK0]=All 3.7L 6-Cylinder Gas Engines									
[ENR]=2.8L 4-Cylinder Turbo Diesel Engine									
[EN0]=All 4/5 Cylinder Diesel Engines									
[NAA]=Federal Emissions									
[NAE]=California Emissions									
[NAS]=50 States Emissions									
[NA1]=Export Emissons									
[XEF]=Transfer Case Skid Plate Sheild									
1	5072 315AA	1	J, U						CASE, Transfer Front
2	4167 922	6	J, U						STUD, Tranmission Case
3	4856 641	2	J, U						PLUG, Oil Fill
4	J400 6681	6	J, U						NUT AND CONED WASHER, Hex, .375-24
5	4886 473AA	1	J, U						SCREW
6	4338 956	1	J, U						SEAL, Vacuum Switch
7									PLUG
	4880 129AA	2	U			EN0			
	0015 105	1	J, U						
8	5003 445AA	1	J, U						SPRING, Poppet Plunger
9	5003 444AA	1	J, U						PLUNGER
10	4210 617	8	J, U						BOLT, Transfer Case
11	5072 305AA	1	J, U						RETAINER, Transfer Case Rear
12	5010 884AA	1	J, U						SEALANT, RTV
13	3681 601	1	J, U						MAGNET, Transmission
14	4796 910	1	J, U						VENT, Transfer Case
15	4116 310	2	J, U						DOWEL, Transfer Case
16	4210 983	2	J, U						WASHER, Flat
17	4210 614	1	J, U						BOLT, Hex Flange Head
18									CLIP, (NOT REQUIRED)

2006 Liberty (KJ)

SERIES	LINE	BODY	ENGINE	TRANSMISSION
H =HIGHLINE	T =JEEP - 2WD	74 =SPORT UTILITY 4-DR	EKG=3.7L V6 Eng.	DG6=4-Spd. Auto. 42RLE Trans.
M =MEDIUM	J =JEEP - 4WD		ENR=2.8L 4 Cyl Turbo Diesel Eng.	DGV=4-Spd. Auto. VLP Trans.
P =PREMIUM	U =JEEP - 4WD (RHD)		ENJ=2.5L 4 Cyl 16V Turbo Diesel Eng.	DGQ=5-Spd Auto. 5-45RFE Trans.
			ED1=2.4L 4 Cyl DOHC 16v SMPI Eng.	DEH=6-Speed Man. NSG370 Trans.
				DDD=5-Speed HD Man. Trans.
				DDK=5-Speed HD Man. Trans.

AR = Use as required - = Non illustrated part # = New this model year

Case and Related Parts Select Trac NVG 242 [DHP]
Figure 242-205

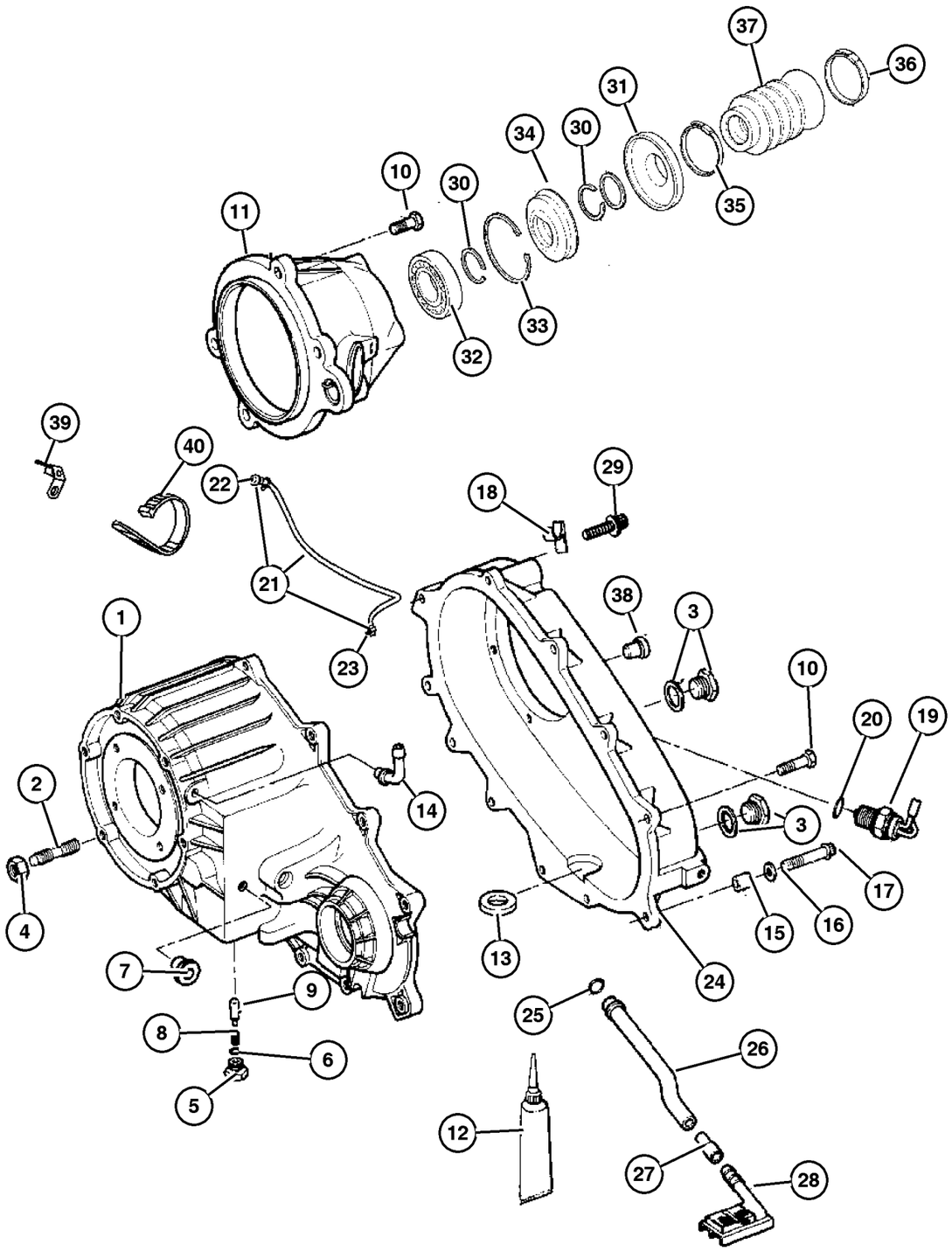

ITEM	PART NUMBER	QTY	LINE	SERIES	BODY	ENGINE	TRANS	TRIM	DESCRIPTION
19	5083 138AA	1	J, U						SWITCH, Transfer Case, 5 Position
20	4338 956	1	J, U						SEAL, Vacuum Switch
21	52105 882AA	1	J, U						HOSE, vent
22	4213 328	1	J, U						VENT, Cap
23	6502 081	1	J, U						CLAMP, Oil Cooler Line
24	5013 858AA	1	J, U						CASE, Transfer Rear
25	4338 942	1	J, U						SEAL, Oil
26	5003 455AA	1	J, U						TUBE, Oil Pickup
27	4338 944	1	J, U						CONNECTOR, Oil Tube Pickup
28	4338 943	1	J, U						FILTER, Transfer Case Oil
29	J813 0979	1	J, U						BOLT, Twelve Point Head, M10x1.5x48
30	4883 597AA	2	J, U						SNAP RING
31	5072 308AA	1	J, U						SLINGER, Transfer Case Flange
32	2466 224	1	J, U						BEARING, Output Shaft
33	5072 306AB	1	J, U						SNAP RING
34	5072 307AA	1	J, U						SEAL, Output Shaft
35	5072 310AA	1	J, U						CLAMP, Boot
36	5072 311AA	1	J, U						CLAMP, Boot
37	5072 329AB	1	J, U						BOOT, Output Shaft, None
38	4638 953	1	J, U						DOWEL
39	56041 823AB	1	J, U			EN0	DBB		BRACKET, Oxygen Sensor
40	5073 039AA	1	J, U						STRAP, Tie

2006 Liberty (KJ)

SERIES	LINE	BODY	ENGINE	TRANSMISSION
H =HIGHLINE	T =JEEP - 2WD	74 =SPORT UTILITY 4-DR	EKG=3.7L V6 Eng.	DG6=4-Spd. Auto. 42RLE Trans.
M =MEDIUM	J =JEEP - 4WD		ENR=2.8L 4 Cyl Turbo Diesel Eng.	DGV=4-Spd. Auto. VLP Trans.
P =PREMIUM	U =JEEP - 4WD (RHD)		ENJ=2.5L 4 Cyl 16V Turbo Diesel Eng.	DGQ=5-Spd Auto. 5-45RFE Trans.
			ED1=2.4L 4 Cyl DOHC 16v SMPI Eng.	DEH=6-Speed Man. NSG370 Trans.
				DDD=5-Speed HD Man. Trans.
				DDK=5-Speed HD Man. Trans.

AR = Use as required - = Non illustrated part # = New this model year

Gear Train Select Trac NVG 242 [DHP]
Figure 242-405

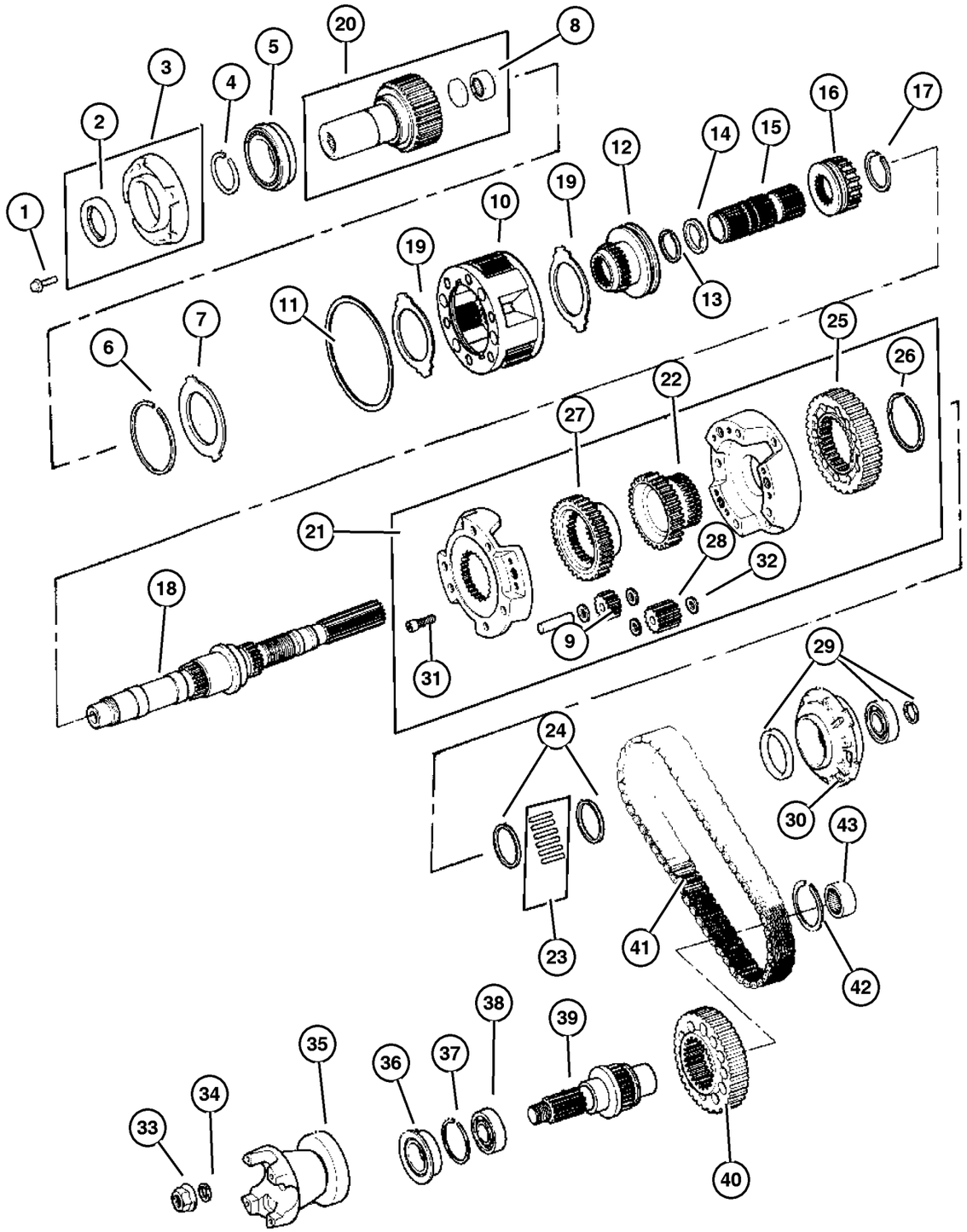

NOTE:

Refer To All Proper Tag Numbers And Stamping Numbers Before Ordering Transfer Cases And/ Or Transfer Case Parts.

Sales Codes:

[DBB]=All Manual Transmissions
[DEH]=6-Speed Manual NSG370 Transmission

[DGQ]=5-Speed Automatic 5-45RFE Transmission
[DGV]=4-Speed Automatic VLP Transmission
[DG0]=All Automatic Transmissions
[DG6]=4-Speed Automatic 42RLE Transmission

[DHE]=Command-Trac H.D. Part Time NVG 241 GII Transfer Case
[DHN]=Command-Trac Part Time NVG 231 Transfer Case
[DHP]=Selec-Trac Full Time NVG 242 Transfer Case
[EKG]=3.7L "Magnum" V-6 Engine

[EK0]=All 3.7L 6-Cylinder Gas Engines
[ENR]=2.8L 4-Cylinder Turbo Diesel Engine
[EN0]=All 4/5 Cylinder Diesel Engines
[NAA]=Federal Emissions

[NAE]=California Emissions
[NAS]=50 States Emissions
[NA1]=Export Emissons
[XEF]=Transfer Case Skid Plate Sheild

ITEM	PART NUMBER	QTY	LINE	SERIES	BODY	ENGINE	TRANS	TRIM	DESCRIPTION
1	6501 371	4	J, U						BOLT, Retainer, M10X1.50X30.00
2	5019 020AB	1	J, U						SEAL, Input Gear
3	4338 973	1	J, U						EXTENSION, Transfer Case
4	3821 558	1	J, U						SNAP RING
5	4746 155	1	J, U						BEARING, Input Gear
6	4338 910	1	J, U						SNAP RING
7	5019 579AA	1	J, U						PLATE
8	8350 3507	1	J, U						BEARING, Input Shaft
9	8350 4170	1	J, U						GEAR, Planetary
10	4796 903AB	1	J, U						PLANETARY, Transfer Case
11	4219 065	1	J, U						SNAP RING, Annulus Gear
12	5003 746AA	1	J, U						SLEEVE, Shift Range
13	8350 3540	1	J, U						SNAP RING
14	8350 3539	1	J, U						WASHER, Intermediate Sleeve
15	4798 277	1	J, U						SHAFT, Intermediate
16	8350 3542	1	J, U						SLEEVE, Mode Synchronizer
17	8350 3537	1	J, U						SNAP RING
18	5072 299AA	1	J, U						MAINSHAFT, Transfer Case
19	4338 908	2	J, U						THRUST WASHER, Planetary Carrier
20	5003 446AA	1	J, U						GEAR, Input

2006 Liberty (KJ)

SERIES	LINE	BODY	ENGINE	TRANSMISSION
H =HIGHLINE	T =JEEP - 2WD	74 =SPORT UTILITY 4-DR	EKG=3.7L V6 Eng.	DG6=4-Spd. Auto. 42RLE Trans.
M =MEDIUM	J =JEEP - 4WD		ENR=2.8L 4 Cyl Turbo Diesel Eng.	DGV=4-Spd. Auto. VLP Trans.
P =PREMIUM	U =JEEP - 4WD (RHD)		ENJ=2.5L 4 Cyl 16V Turbo Diesel Eng.	DGQ=5-Spd Auto. 5-45RFE Trans.
			ED1=2.4L 4 Cyl DOHC 16v SMPI Eng.	DEH=6-Speed Man. NSG370 Trans.
				DDD=5-Speed HD Man. Trans.
				DDK=5-Speed HD Man. Trans.

Gear Train Select Trac NVG 242 [DHP]
Figure 242-405

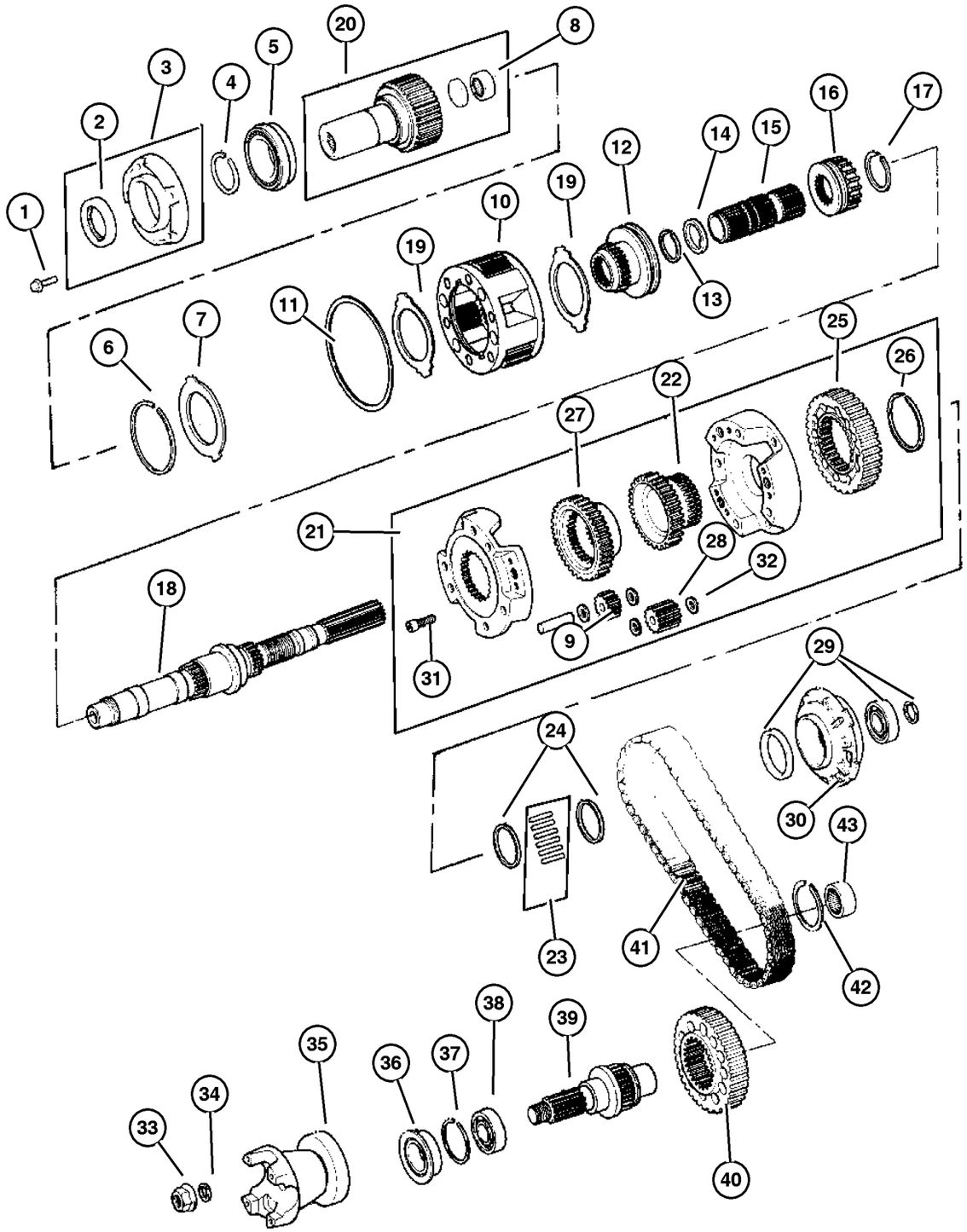

ITEM	PART NUMBER	QTY	LINE	SERIES	BODY	ENGINE	TRANS	TRIM	DESCRIPTION
21	5072 300AA	1	J, U						DIFFERENTIAL, Transfer Case
22	5072 301AA	1	J, U						SPROCKET, Transfer Case
23	5066 996AA	1	J, U						NEEDLE BEARING, Roller Cage, None
24	4338 908	2	J, U						THRUST WASHER, Planetary Carrier
25	8350 3536	1	J, U						SPROCKET, Differential
26	8350 3532	1	J, U						SNAP RING
27	5003 450AA	1	J, U						GEAR, Differential Drive
28	8350 4169	3	J, U						GEAR, Planetary
29									SEAL, Main Shaft, (NOT REQUIRED)
30	4883 596AA	1	J, U						PUMP, Transfer Case Oil
31	4886 473AA	1	J, U						SCREW
32	8350 4168	12	J, U						WASHER, Differential Gear
33	4167 924	1	J, U						NUT, Transfer Case Yoke
34	4210 973	1	J, U						WASHER, Transfer Case Yoke
35	5103 223AA	1	J, U						FLANGE, Driveshaft Yoke
36	4798 125	1	J, U						SEAL, Output Shaft
37	0893 31A	1	J, U						SNAP RING
38	4269 189	1	J, U						BEARING, Output Shaft
39	5012 336AA	1	J, U						OUTPUT SHAFT, Transfer Case
40	5072 302AA	1	J, U						SPROCKET, Transfer Case
41	5012 322AB	1	J, U						CHAIN, Transfer Case
42	4167 991	1	J, U						SNAP RING, Bearing
43	4883 601AA	1	J, U						BEARING, Output Shaft

2006 Liberty (KJ)

SERIES	LINE	BODY	ENGINE	TRANSMISSION
H =HIGHLINE	T =JEEP - 2WD	74 =SPORT UTILITY 4-DR	EKG=3.7L V6 Eng.	DG6=4-Spd. Auto. 42RLE Trans.
M =MEDIUM	J =JEEP - 4WD		ENR=2.8L 4 Cyl Turbo Diesel Eng.	DGV=4-Spd. Auto. VLP Trans.
P =PREMIUM	U =JEEP - 4WD (RHD)		ENJ=2.5L 4 Cyl 16V Turbo Diesel Eng.	DGQ=5-Spd Auto. 5-45RFE Trans.
			ED1=2.4L 4 Cyl DOHC 16v SMPI Eng.	DEH=6-Speed Man. NSG370 Trans.
				DDD=5-Speed HD Man. Trans.
				DDK=5-Speed HD Man. Trans.

AR = Use as required - = Non illustrated part # = New this model year

Forks and Rails Select Trac NVG 242 [DHP]
Figure 242-905

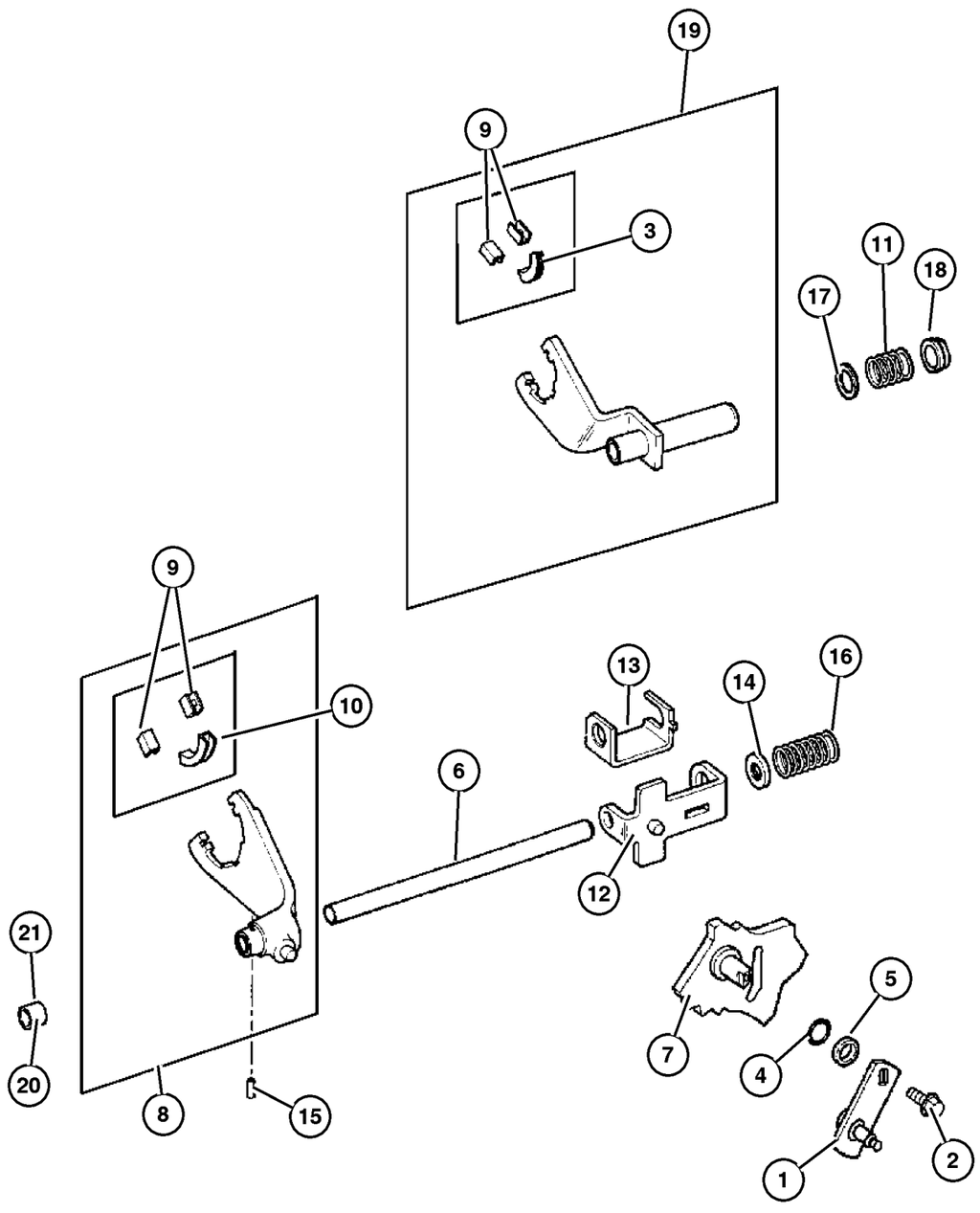

ITEM	PART NUMBER	QTY	LINE	SERIES	BODY	ENGINE	TRANS	TRIM	DESCRIPTION

NOTE:

Refer To All Proper Tag Numbers And Stamping Numbers Before Ordering Transfer Cases And/ Or Transfer Case Parts.
Sales Codes:
[DBB]=All Manual Transmissions
[DEH]=6-Speed Manual NSG370 Transmission
[DGQ]=5-Speed Automatic 5-45RFE Transmission
[DGV]=4-Speed Automatic VLP Transmission
[DG0]=All Automatic Transmissions
[DG6]=4-Speed Automatic 42RLE Transmission
[DHE]=Command-Trac H.D. Part Time NVG 241 GII Transfer Case
[DHN]=Command-Trac Part Time NVG 231 Transfer Case
[DHP]=Selec-Trac Full Time NVG 242 Transfer Case
[EKG]=3.7L ‘‘Magnum‘‘ V-6 Engine
[EK0]=All 3.7L 6-Cylinder Gas Engines
[ENR]=2.8L 4-Cylinder Turbo Diesel Engine
[EN0]=All 4/5 Cylinder Diesel Engines
[NAA]=Federal Emissions
[NAE]=California Emissions
[NAS]=50 States Emissions
[NA1]=Export Emissons
[XEF]=Transfer Case Skid Plate Sheild

1	5159 093AA	1	J, U						LEVER, Transfer Case
2	5014 048AA	1	J, U						BOLT, Hex Head
3	4338 376	1	J, U						PAD, Shift Fork
4	5014 046AA	1	J, U						SEAL, Sector Shaft
5	5003 442AA	1	J, U						BEARING, Shift Lever Linkage
6	8350 4469	1	J, U						RAIL, Transfer Case
7	5072 569AA	1	J, U						SECTOR, Transfer Case
8	5003 459AA	1	J, U						FORK, Range
9	4167 969	2	J, U						PAD, Shift Fork
10	4167 970	1	J, U						PAD, Shift Fork
11	8350 3513	1	J, U						SPRING, Mode Shift Fork
12	8350 3510	1	J, U						BRACKET, Shift Mode
13	8350 3511	1	J, U						BRACKET, Shift Mode
14	8350 3515	1	J, U						CUP, Shift Fork Spring
15	1664 355	1	J, U						PIN, Shift Fork
16	8350 3516	1	J, U						SPRING, Mode Shift Fork
17	8350 3512	1	J, U						WASHER, Flat
18	8350 3514	1	J, U						BUSHING, Shift Rail
19	4638 950AB	1	J, U						FORK, Transfer Case Mode Shift
20	4338 945	1	J, U						BUSHING, Shift Rail
21	4338 945	1	J, U						BUSHING, Shift Rail

2006 Liberty (KJ)

SERIES	LINE	BODY	ENGINE	TRANSMISSION
H =HIGHLINE	T =JEEP - 2WD	74 =SPORT UTILITY 4-DR	EKG=3.7L V6 Eng.	DG6=4-Spd. Auto. 42RLE Trans.
M =MEDIUM	J =JEEP - 4WD		ENR=2.8L 4 Cyl Turbo Diesel Eng.	DGV=4-Spd. Auto. VLP Trans.
P =PREMIUM	U =JEEP - 4WD (RHD)		ENJ=2.5L 4 Cyl 16V Turbo Diesel Eng.	DGQ=5-Spd Auto. 5-45RFE Trans.
			ED1=2.4L 4 Cyl DOHC 16v SMPI Eng.	DEH=6-Speed Man. NSG370 Trans.
				DDD=5-Speed HD Man. Trans.
				DDK=5-Speed HD Man. Trans.

Gearshift Controls NVG 242 [DHP]
Figure 242-1205

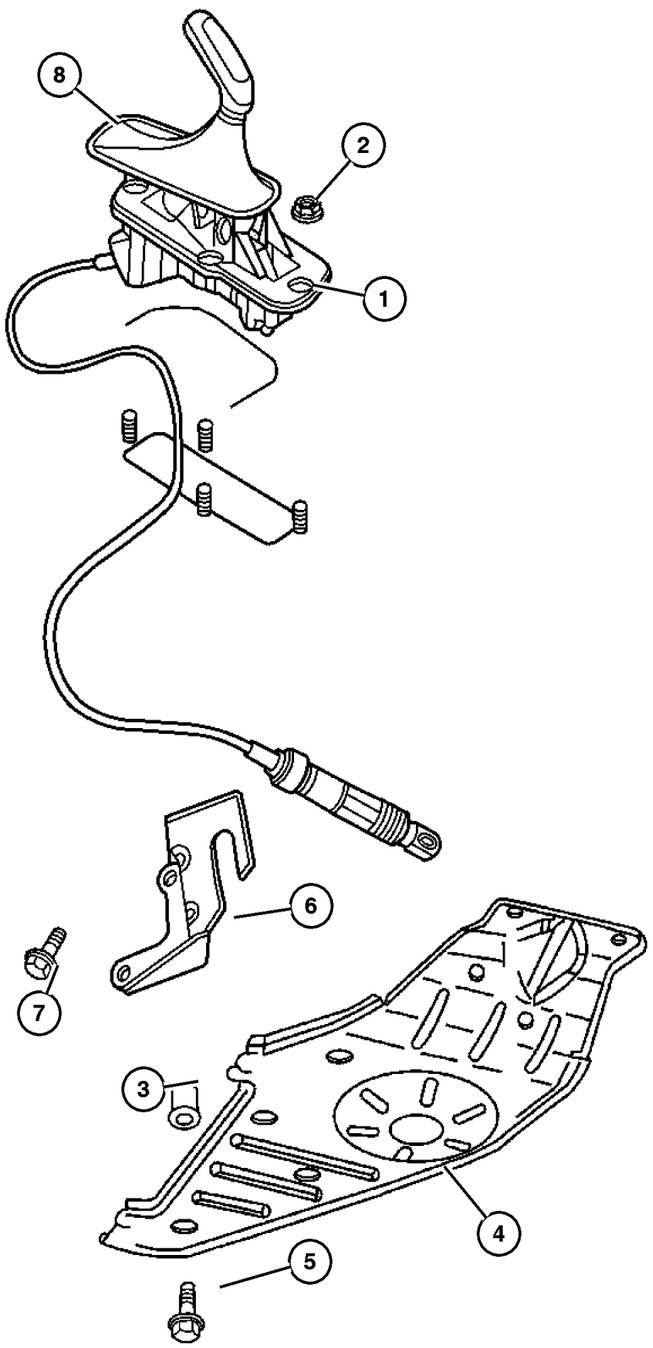

ITEM	PART NUMBER	QTY	LINE	SERIES	BODY	ENGINE	TRANS	TRIM	DESCRIPTION
NOTE:									
Refer To All Proper Tag Numbers And Stamping Numbers Before Ordering Transfer Cases And/ Or Transfer Case Parts.									
Sales Codes:									
[DBB]=All Manual Transmissions									
[DEH]=6-Speed Manual NSG370 Transmission									
[DGQ]=5-Speed Automatic 5-45RFE Transmission									
[DGV]=4-Speed Automatic VLP Transmission									
[DG0]=All Automatic Transmissions									
[DG6]=4-Speed Automatic 42RLE Transmission									
[DHE]=Command-Trac H.D. Part Time NVG 241 GII Transfer Case									
[DHN]=Command-Trac Part Time NVG 231 Transfer Case									
[DHP]=Selec-Trac Full Time NVG 242 Transfer Case									
[EKG]=3.7L ‘‘Magnum‘‘ V-6 Engine									
[EK0]=All 3.7L 6-Cylinder Gas Engines									
[ENR]=2.8L 4-Cylinder Turbo Diesel Engine									
[EN0]=All 4/5 Cylinder Diesel Engines									
[NAA]=Federal Emissions									
[NAE]=California Emissions									
[NAS]=50 States Emissions									
[NA1]=Export Emissons									
[XEF]=Transfer Case Skid Plate Sheild									
1	52129 243AF	1	J, U						SHIFTER, Transfer Case
2	3420 1358	4							NUT AND WASHER, Hex Nut-Sealing Washer, M6 x 1.00, M6X1.00, Transfer Case Cover To Floor Pan, Mounting
3	6506 644AA	4	J, U						RIVET, M10X1.50X17.7, Transfer Case Skid Plate, Mounting
4	52129 091AA	1	J, U						PLATE, Transfer Case Skid
5	6506 027AA	4	J, U						SCREW, Hex Head, M10X1.50X40.00, Transfer Case Skid Plate To Body, Mounting
6									BRACKET, Shifter
	52128 954AB	1	J, U			DG6, DGV			
	52128 955AB	1	J, U			DGQ			
	52128 956AB	1	J, U			DBB			
7	6101 752	3	J, U			DG0			SCREW AND WASHER, Hex Head, M10x1.5x28, Transfer Case, Mounting
8	52109 709AE	1	J, U						BOOT, Gearshift

2006 Liberty (KJ)

SERIES	LINE	BODY	ENGINE	TRANSMISSION
H =HIGHLINE	T =JEEP - 2WD	74 =SPORT UTILITY 4-DR	EKG=3.7L V6 Eng.	DG6=4-Spd. Auto. 42RLE Trans.
M =MEDIUM	J =JEEP - 4WD		ENR=2.8L 4 Cyl Turbo Diesel Eng.	DGV=4-Spd. Auto. VLP Trans.
P =PREMIUM	U =JEEP - 4WD (RHD)		ENJ=2.5L 4 Cyl 16V Turbo Diesel Eng.	DGQ=5-Spd Auto. 5-45RFE Trans.
			ED1=2.4L 4 Cyl DOHC 16v SMPI Eng.	DEH=6-Speed Man. NSG370 Trans.
				DDD=5-Speed HD Man. Trans.
				DDK=5-Speed HD Man. Trans.

Group – 022

Wheels, Covers and Jacks

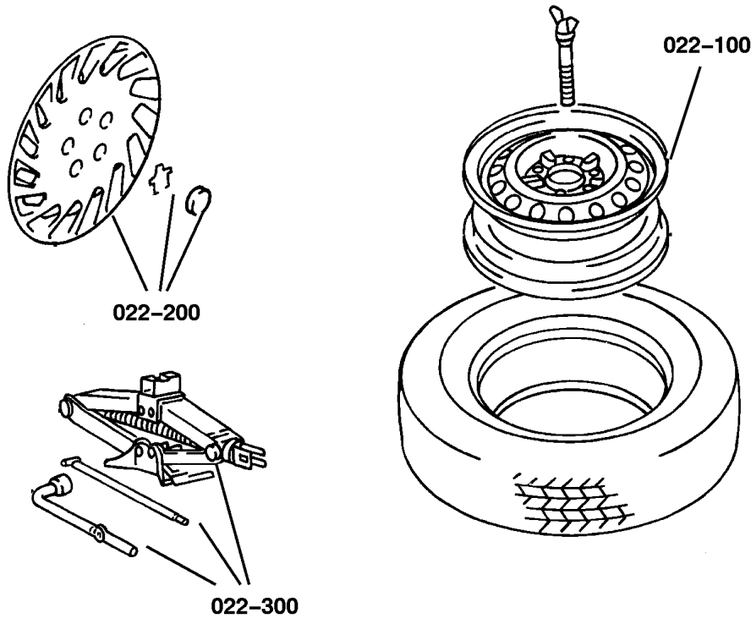

022–100 Wheels and Hardware	022–200 Wheel Covers and Center Caps	022–300 Jack Stowage	022–400 Spare Tire Stowage
		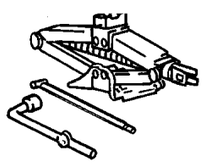	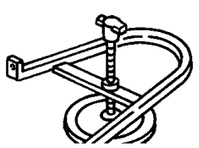

GROUP 22 - Wheels, Covers and Jacks

Illustration Title — Group-Fig. No.

Wheels and Hardware
Wheels and Hardware . . . . . Fig. 022-110
Spare Tire Bracket . . . . . Fig. 022-120

Wheel Covers and Center Caps
Wheel Caps . . . . . Fig. 022-210

Jack Stowage
Jack and Hardware . . . . . Fig. 022-310

Spare Tire Stowage
Spare Wheel . . . . . Fig. 022-410
Spare Wheel, Export . . . . . Fig. 022-420

Wheels and Hardware
Figure 022-110

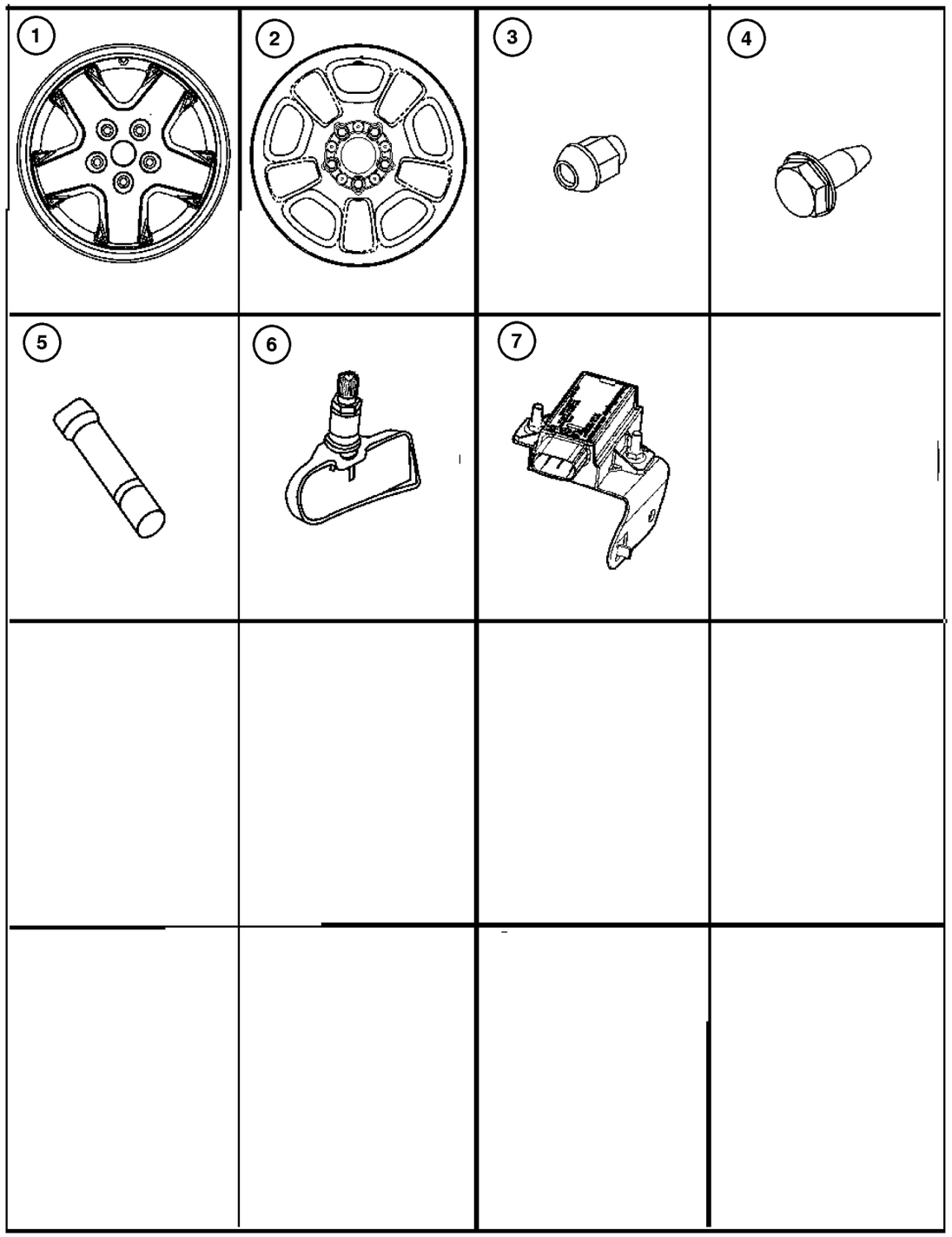

ITEM	PART NUMBER	QTY	LINE	SERIES	BODY	ENGINE	TRANS	TRIM	DESCRIPTION
NOTES: Sales Codes:									
[LAB] = Tire Pressure Monitoring Warning									
[WDU] = 16x7.0 Aluminum Wheel									
[WGQ] = 17x7.5 Aluminum Wheel									
[WGX] = 17x8.0 Aluminum Chrome Clad Wheel									
[XGM] = Tire Pressure Monitoring Display									
1									WHEEL, Aluminum
	52109 979AB	4							[WGX]
	5HW90 PAKAB	4							[WGQ]
	5JX82 CDMAA	4							[WDU]
2	5GL65 S4AAD	4							WHEEL, Steel, [WLC]
3	6036 310AA	20							NUT, Wheel, .50x20
4	6506 476AA	12							SCREW, Hex Flange Head, M4.8x1. 59x11.00, Cap to Wheel [WLC]
5	2073 355	5							STEM, Wheel Valve
6	56053 030AB	4							SENSOR, Tire Pressure, valve stem, [XGM=LAB]
7	56044 713AB	1							TRIGGER, Tire Pressure, [XGM]

2006 Liberty (KJ)

SERIES	LINE	BODY	ENGINE	TRANSMISSION
H =HIGHLINE	T =JEEP - 2WD	74 =SPORT UTILITY 4-DR	EKG=3.7L V6 Eng.	DG6=4-Spd. Auto. 42RLE Trans.
M =MEDIUM	J =JEEP - 4WD		ENR=2.8L 4 Cyl Turbo Diesel Eng.	DGV=4-Spd. Auto. VLP Trans.
P =PREMIUM	U =JEEP - 4WD (RHD)		ENJ=2.5L 4 Cyl 16V Turbo Diesel Eng.	DGQ=5-Spd Auto. 5-45RFE Trans.
			ED1=2.4L 4 Cyl DOHC 16v SMPI Eng.	DEH=6-Speed Man. NSG370 Trans.
				DDD=5-Speed HD Man. Trans.
				DDK=5-Speed HD Man. Trans.

Spare Tire Bracket
Figure 022-120

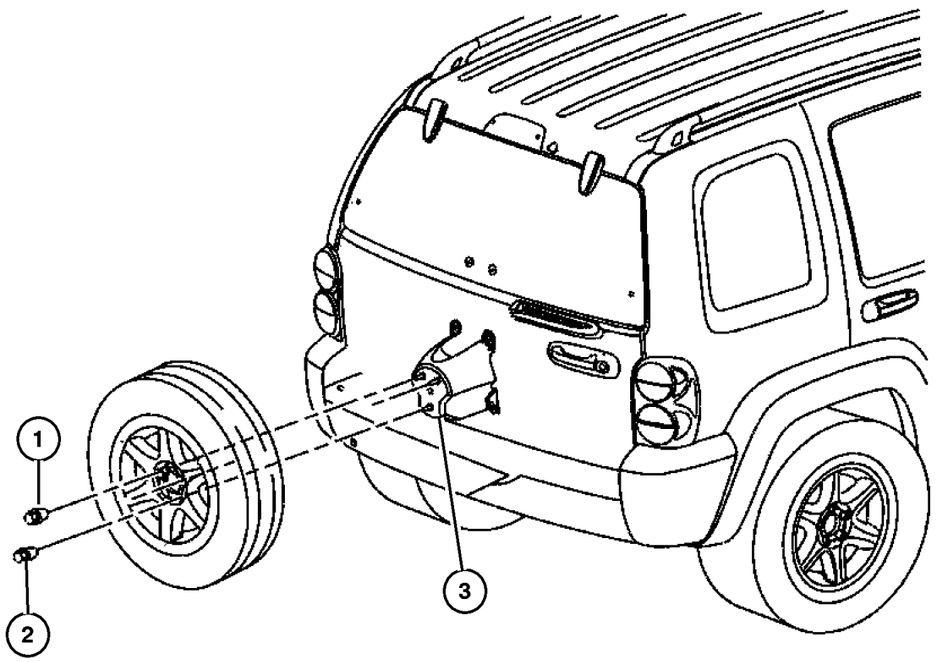

ITEM	PART NUMBER	QTY	LINE	SERIES	BODY	ENGINE	TRANS	TRIM	DESCRIPTION
NOTES: Sales Codes:									
[TBR] = Outside Tire Carrier									
[XJC] = Locking Lug Nuts									
1	6036 310AA	20							NUT, Wheel, .50x20
2	5208 8515	1							NUT, Lock, .50-20
3	55155 933AC	1							BRACKET, Spare Tire

2006 Liberty (KJ)

SERIES	LINE	BODY	ENGINE	TRANSMISSION
H =HIGHLINE	T =JEEP - 2WD	74 =SPORT UTILITY 4-DR	EKG=3.7L V6 Eng.	DG6=4-Spd. Auto. 42RLE Trans.
M =MEDIUM	J =JEEP - 4WD		ENR=2.8L 4 Cyl Turbo Diesel Eng.	DGV=4-Spd. Auto. VLP Trans.
P =PREMIUM	U =JEEP - 4WD (RHD)		ENJ=2.5L 4 Cyl 16V Turbo Diesel Eng.	DGQ=5-Spd Auto. 5-45RFE Trans.
			ED1=2.4L 4 Cyl DOHC 16v SMPI Eng.	DEH=6-Speed Man. NSG370 Trans.
				DDD=5-Speed HD Man. Trans.
				DDK=5-Speed HD Man. Trans.

Wheel Caps
Figure 022-210

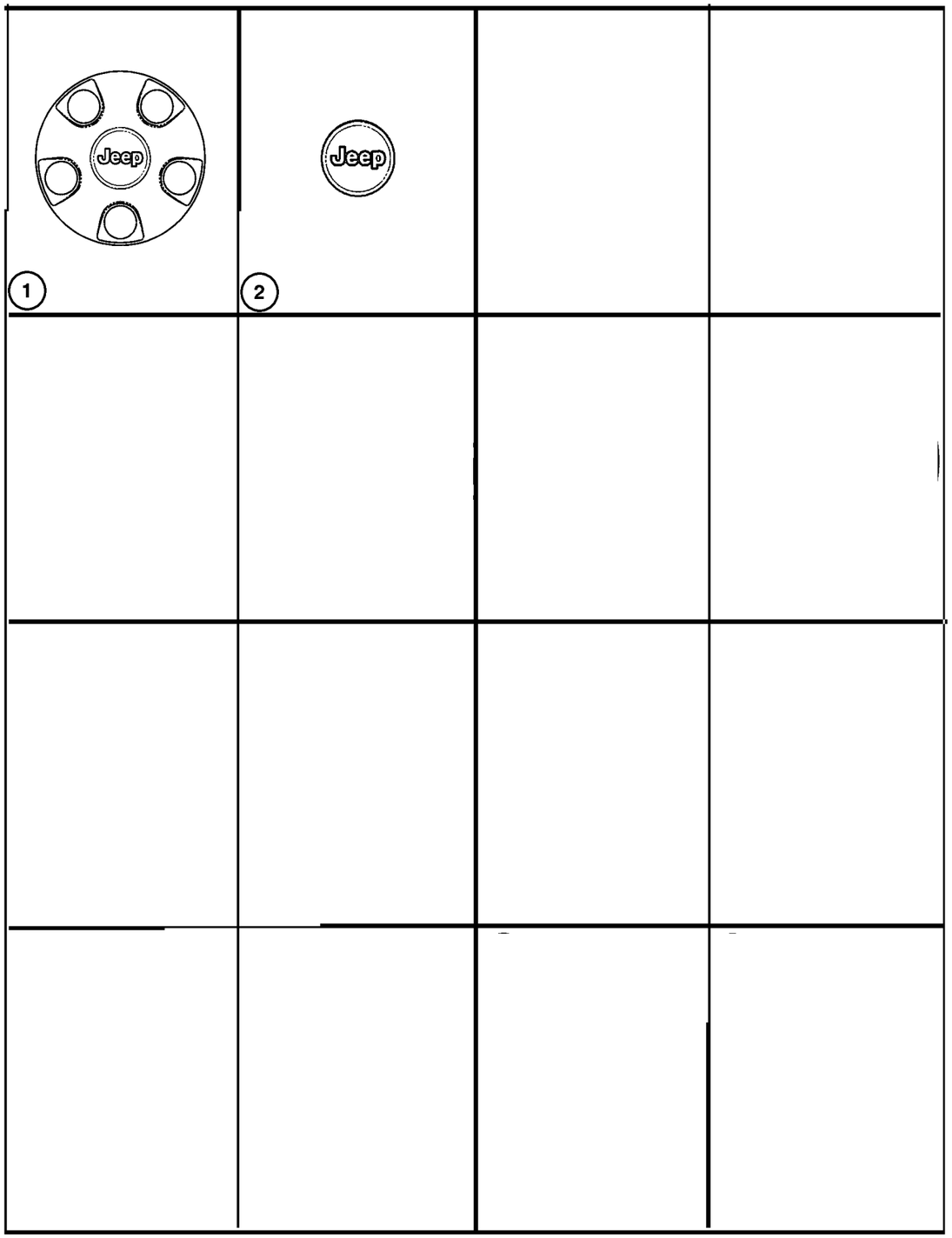

ITEM	PART NUMBER	QTY	LINE	SERIES	BODY	ENGINE	TRANS	TRIM	DESCRIPTION
Note; Sales Codes									
[WGR]= 17x7.5 Cast Aluminum									
[WGQ]= 17x7.5 Aluminum									
[WGX] = 17X7.0 Aluminum Chrome Clad									
1									CAP, Wheel Center
	52090 401AA	4							[WGX]
	5HT59 CDMAA	4							[WDU]
2	52059 522AA	4							CAP, Wheel Center, [WGQ]

2006 Liberty (KJ)

SERIES	LINE	BODY	ENGINE	TRANSMISSION
H =HIGHLINE	T =JEEP - 2WD	74 =SPORT UTILITY 4-DR	EKG=3.7L V6 Eng.	DG6=4-Spd. Auto. 42RLE Trans.
M =MEDIUM	J =JEEP - 4WD		ENR=2.8L 4 Cyl Turbo Diesel Eng.	DGV=4-Spd. Auto. VLP Trans.
P =PREMIUM	U =JEEP - 4WD (RHD)		ENJ=2.5L 4 Cyl 16V Turbo Diesel Eng.	DGQ=5-Spd Auto. 5-45RFE Trans.
			ED1=2.4L 4 Cyl DOHC 16v SMPI Eng.	DEH=6-Speed Man. NSG370 Trans.
				DDD=5-Speed HD Man. Trans.
				DDK=5-Speed HD Man. Trans.

Jack and Hardware
Figure 022-310

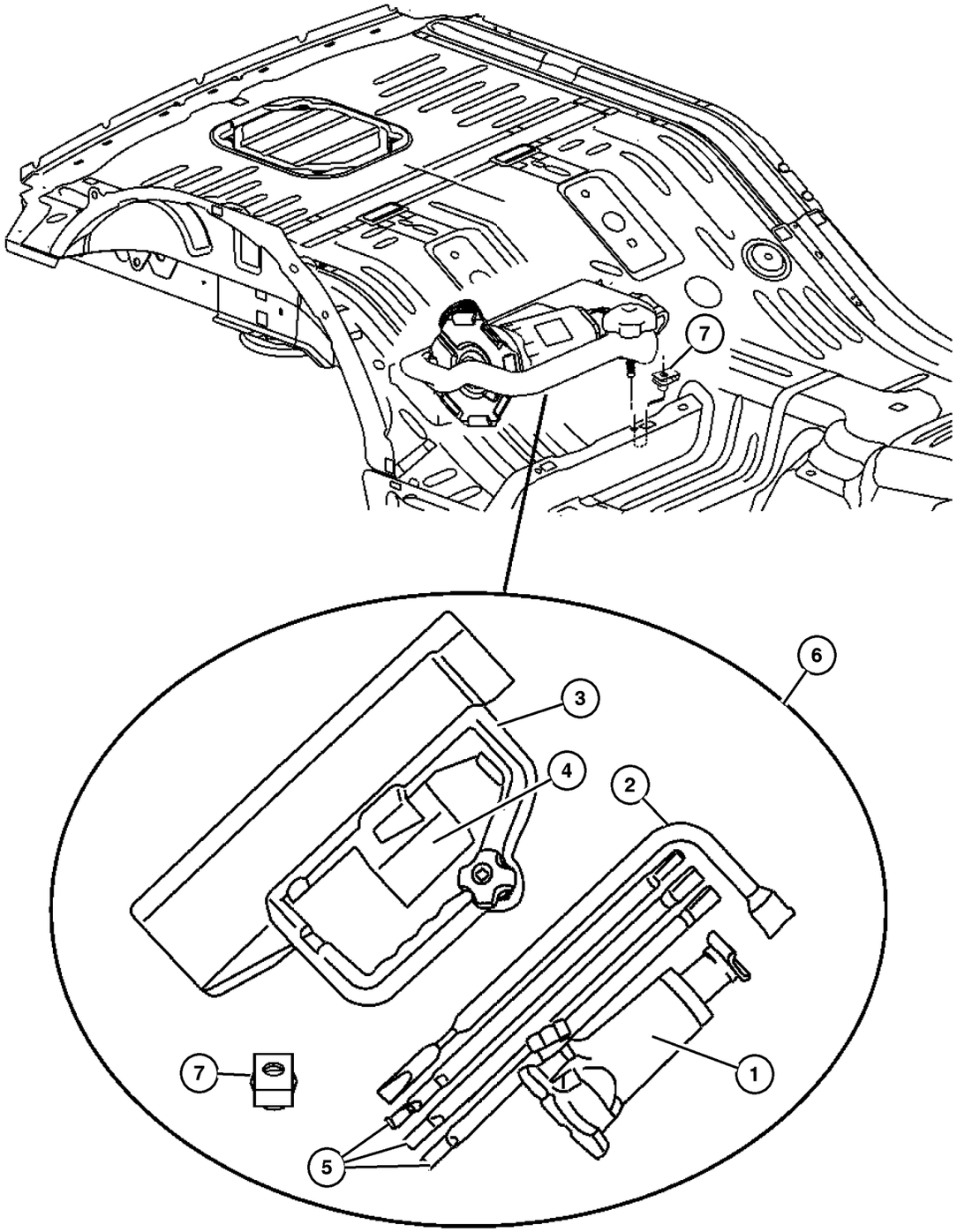

ITEM	PART NUMBER	QTY	LINE	SERIES	BODY	ENGINE	TRANS	TRIM	DESCRIPTION
1	55366 972AA	1							JACK
2	52059 478AA	1							WRENCH, Wheel Lug Nut
3	52129 757AB	1							BRACKET AND LOCATOR, Jack Stowage
4	52110 391AB	1							LABEL, Jack Caution
5	52021 681AB	1							EXTENSION, Jack Handle
6	52129 395AA	1							TOOL KIT, Jack
7	6101 283	1							U-NUT, M8x1.25, Jack & Tool Assy. to Body
-8	6035 073	4							RIVET, Blind, .190x.670, Fire Extinquisher Holdown
-9	55352 852AA-	1							TOOL SET

2006 Liberty (KJ)

SERIES	LINE	BODY	ENGINE	TRANSMISSION
H =HIGHLINE	T =JEEP - 2WD	74 =SPORT UTILITY 4-DR	EKG=3.7L V6 Eng.	DG6=4-Spd. Auto. 42RLE Trans.
M =MEDIUM	J =JEEP - 4WD		ENR=2.8L 4 Cyl Turbo Diesel Eng.	DGV=4-Spd. Auto. VLP Trans.
P =PREMIUM	U =JEEP - 4WD (RHD)		ENJ=2.5L 4 Cyl 16V Turbo Diesel Eng.	DGQ=5-Spd Auto. 5-45RFE Trans.
			ED1=2.4L 4 Cyl DOHC 16v SMPI Eng.	DEH=6-Speed Man. NSG370 Trans.
				DDD=5-Speed HD Man. Trans.
				DDK=5-Speed HD Man. Trans.

Spare Wheel
Figure 022-410

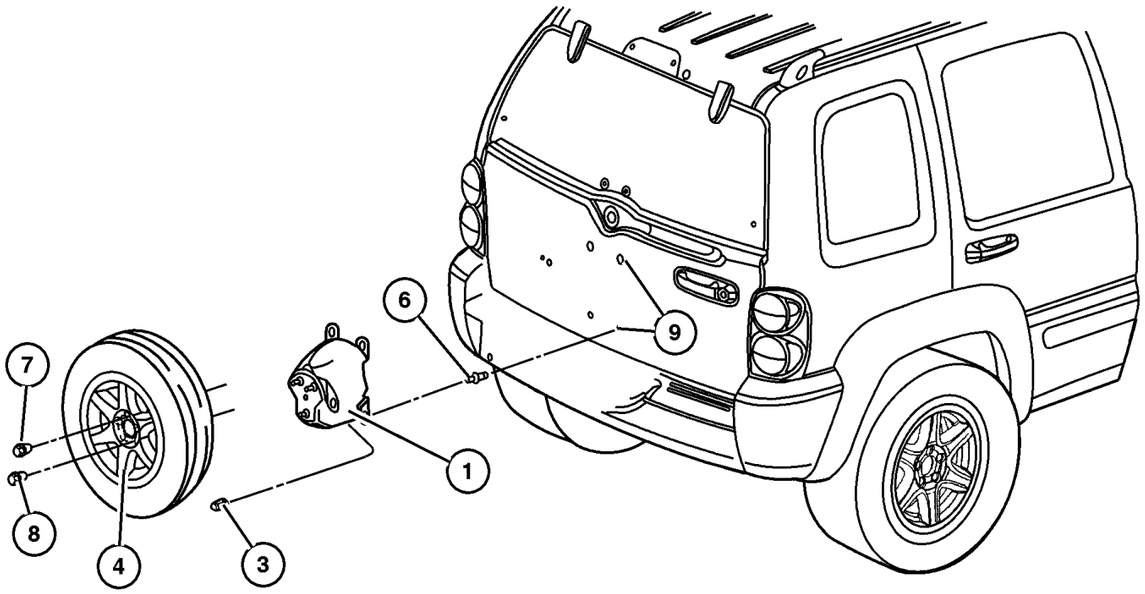

ITEM	PART NUMBER	QTY	LINE	SERIES	BODY	ENGINE	TRANS	TRIM	DESCRIPTION
1	55155 933AC	1							BRACKET, Spare Tire
-2	55360 585AA-	2							GASKET, Spare Tire Bracket
3	6507 799AA	4							NUT, Wheel
4									WHEEL, Spare, See Wheel ILL#110, (NOT SERVICED) (Not Serviced)
-5									COVER, Spare Tire
	5JG14 1X7AC-	1							[CSA]
	5JG71 1X7AA-	1							[CSB]
6	6507 623AA	AR							STUD
7	6036 310AA	3							NUT, Wheel, .50x20
8	5208 8515	1							NUT, Lock, .50-20
9	55360 618AA	2							BRACKET, Spare Tire

2006 Liberty (KJ)

SERIES	LINE	BODY	ENGINE	TRANSMISSION
H =HIGHLINE	T =JEEP - 2WD	74 =SPORT UTILITY 4-DR	EKG=3.7L V6 Eng.	DG6=4-Spd. Auto. 42RLE Trans.
M =MEDIUM	J =JEEP - 4WD		ENR=2.8L 4 Cyl Turbo Diesel Eng.	DGV=4-Spd. Auto. VLP Trans.
P =PREMIUM	U =JEEP - 4WD (RHD)		ENJ=2.5L 4 Cyl 16V Turbo Diesel Eng.	DGQ=5-Spd Auto. 5-45RFE Trans.
			ED1=2.4L 4 Cyl DOHC 16v SMPI Eng.	DEH=6-Speed Man. NSG370 Trans.
				DDD=5-Speed HD Man. Trans.
				DDK=5-Speed HD Man. Trans.

AR = Use as required - = Non illustrated part # = New this model year

Spare Wheel, Export
Figure 022-420

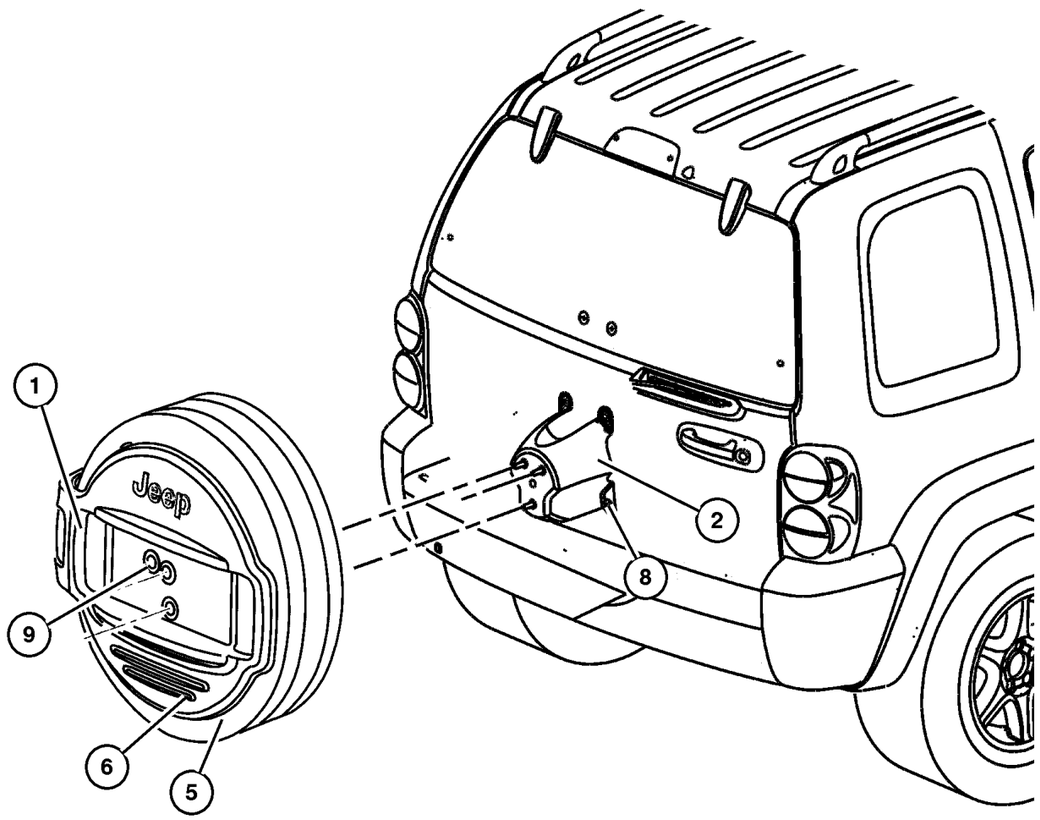

ITEM	PART NUMBER	QTY	LINE	SERIES	BODY	ENGINE	TRANS	TRIM	DESCRIPTION
1									BRACKET, License Plate
	5HF06 RXFAK	1	J, U	H, P					
		1	J, U	M					
2	55155 933AC	1							BRACKET, Spare Tire
-3	6036 303AA-	2	J, U						NUT, .50-20
-4	6036 310AA-	2							NUT, Wheel, .50x20
5									WHEEL, Spare, See Wheel ILL#110, (NOT SERVICED) (Not Serviced)
6									COVER, Spare Tire
	5JG14 1X7AC	1							[CSA]
	5JG71 1X7AA	1							[CSB]
-7	6035 201	1	J, U						RIVET, License Plate Module
8	6507 799AA	4							NUT, Wheel
9	6506 429AA	2	J, U						SCREW, M8x1.25x21

2006 Liberty (KJ)

SERIES	LINE	BODY	ENGINE	TRANSMISSION
H =HIGHLINE	T =JEEP - 2WD	74 =SPORT UTILITY 4-DR	EKG=3.7L V6 Eng.	DG6=4-Spd. Auto. 42RLE Trans.
M =MEDIUM	J =JEEP - 4WD		ENR=2.8L 4 Cyl Turbo Diesel Eng.	DGV=4-Spd. Auto. VLP Trans.
P =PREMIUM	U =JEEP - 4WD (RHD)		ENJ=2.5L 4 Cyl 16V Turbo Diesel Eng.	DGQ=5-Spd Auto. 5-45RFE Trans.
			ED1=2.4L 4 Cyl DOHC 16v SMPI Eng.	DEH=6-Speed Man. NSG370 Trans.
				DDD=5-Speed HD Man. Trans.
				DDK=5-Speed HD Man. Trans.

Group – 23D

Wiper/Lock Cylinder and Keys

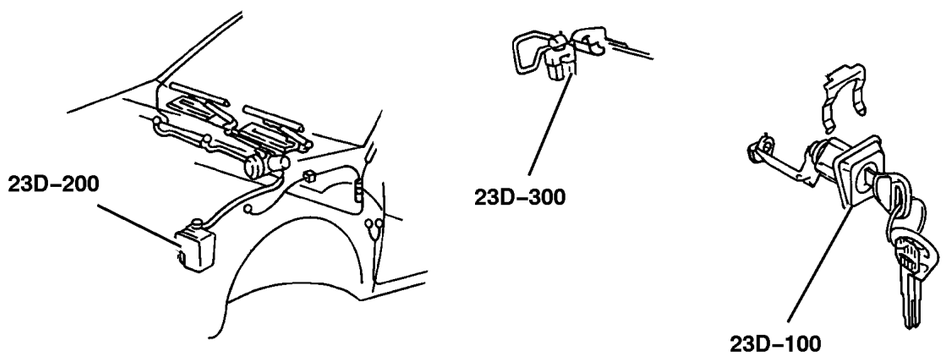

23D–100 Lock Cylinders and Keys	23D–200 Windshield Wiper and Washer Systems	23D–300 Rear Wiper and Washer System	
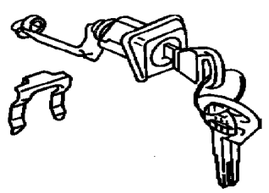			

GROUP 23D - Wiper/Lock Cylinder and Keys

Illustration Title — Group-Fig. No.

Lock Cylinders and Keys
Lock Cylinder and Keys . . . . . Fig. 23D-111

Windshield Wiper and Washer Systems
Windshield Wiper and Washer . . . . . Fig. 23D-210

Rear Wiper and Washer System
Rear Wiper and Washer . . . . . Fig. 23D-310

Lock Cylinder and Keys
Figure 23D-111

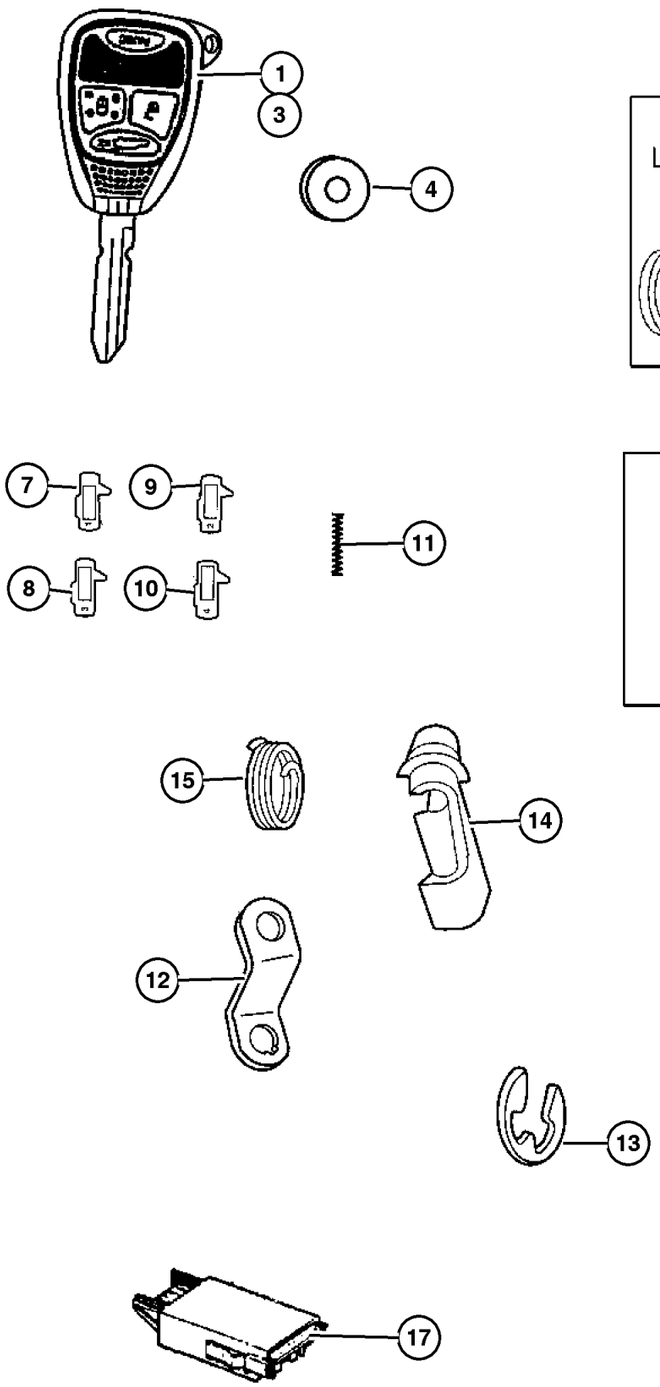

ITEM	PART NUMBER	QTY	LINE	SERIES	BODY	ENGINE	TRANS	TRIM	DESCRIPTION
NOTES:									
Item #1- Key contains the Transmitter with buttons for keyless entry and alarm.									
1									KEY, BLANK WITH TRANSMITTER
	5139 287AA	1	J, T						Jeep Logo 4 Buttons
	5139 289AA	1	J, U						Jeep Logo 3 Buttons [Japan]
	5139 290AA	1	J, U						Jeep Logo 3 Buttons
-2	6507 946AA-	1							SCREW
3									KEY, Blank
	5143 553AA	1	J, U						
		1	J, T						
4									BATTERY, Transmitter
	5066 241AA	1	J, U						
		1	J, T						
5									CYLINDER, Ignition Lock
	5139 207AA	1	J, U						
		1	J, T						
6									CYLINDER, Door Lock
	5072 294AA	1	J, U						
		1	J, T						
7									TUMBLER, Door and Deck Number 1, Wide
	4778 117AB	1	J, U						
		1	J, T						
8									TUMBLER, Door and Deck Number 2, Wide
	4778 118AB	1	J, U						
		1	J, T						
9									TUMBLER, Door and Deck Number 3, Wide
	4778 119AB	1	J, U						
		1	J, T						
10									TUMBLER, Door and Deck Number 4, Wide
	4778 120AB	1	J, U						
		1	J, T						
11									SPRING, Door and Deck Tumbler
	4778 121	1	J, U						
		1	J, T						
12									LEVER, Door Lock Cylinder
	55136 554AA	1	J, U						
		1	J, T						
13									RETAINER, Lock Rod

2006 Liberty (KJ)

SERIES	LINE	BODY	ENGINE	TRANSMISSION
H =HIGHLINE	T =JEEP - 2WD	74 =SPORT UTILITY 4-DR	EKG=3.7L V6 Eng.	DG6=4-Spd. Auto. 42RLE Trans.
M =MEDIUM	J =JEEP - 4WD		ENR=2.8L 4 Cyl Turbo Diesel Eng.	DGV=4-Spd. Auto. VLP Trans.
P =PREMIUM	U =JEEP - 4WD (RHD)		ENJ=2.5L 4 Cyl 16V Turbo Diesel Eng.	DGQ=5-Spd Auto. 5-45RFE Trans.
			ED1=2.4L 4 Cyl DOHC 16v SMPI Eng.	DEH=6-Speed Man. NSG370 Trans.
				DDD=5-Speed HD Man. Trans.
				DDK=5-Speed HD Man. Trans.

AR = Use as required - = Non illustrated part # = New this model year

Lock Cylinder and Keys
Figure 23D-111

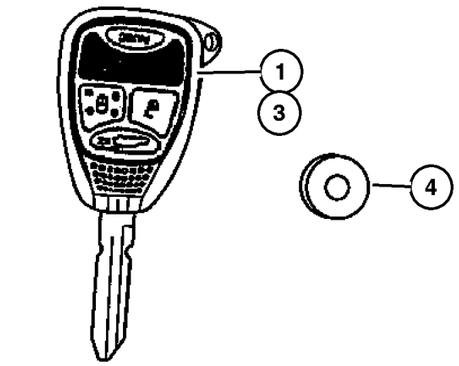

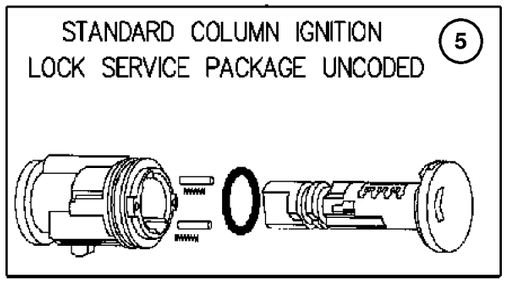

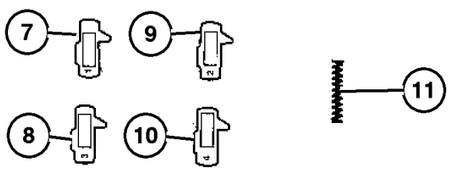

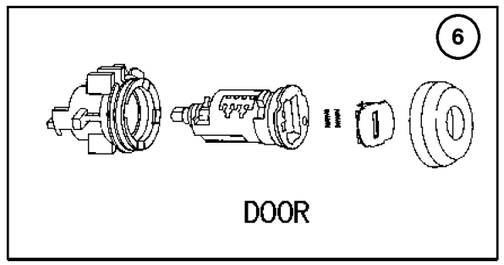

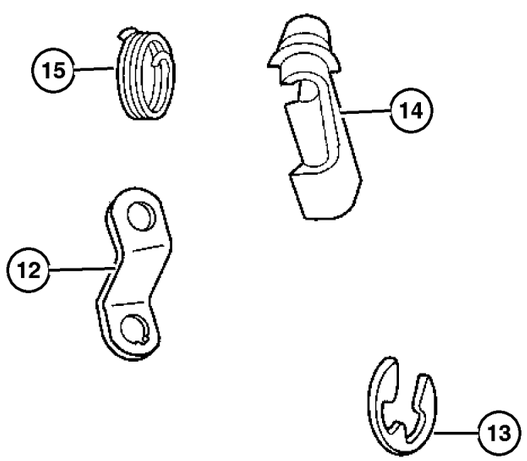

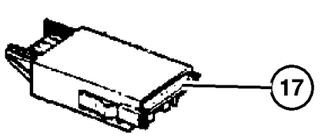

ITEM	PART NUMBER	QTY	LINE	SERIES	BODY	ENGINE	TRANS	TRIM	DESCRIPTION
	5071 063AA	1	J, T						Right
	5071 155AA	1	J, U						Left
	5071 063AA	1	J, U						Right
14									CLIP, Retainer, (NOT SERVICED) (Not Serviced)
15									SPRING, Lock Cylinder Return, (NOT SERVICED) (Not Serviced)
-16									BRACKET, Door Inside
	5072 945AA-	1	J, U						Front Door
		1	J, T						Front Door
	55360 659AA-	1	J, U						Swing Gate
		1	J, T						Swing Gate
17	5026 118AB	1							CONTROL MODULE, Receiver

2006 Liberty (KJ)

SERIES	LINE	BODY	ENGINE	TRANSMISSION
H =HIGHLINE	T =JEEP - 2WD	74 =SPORT UTILITY 4-DR	EKG=3.7L V6 Eng.	DG6=4-Spd. Auto. 42RLE Trans.
M =MEDIUM	J =JEEP - 4WD		ENR=2.8L 4 Cyl Turbo Diesel Eng.	DGV=4-Spd. Auto. VLP Trans.
P =PREMIUM	U =JEEP - 4WD (RHD)		ENJ=2.5L 4 Cyl 16V Turbo Diesel Eng.	DGQ=5-Spd Auto. 5-45RFE Trans.
			ED1=2.4L 4 Cyl DOHC 16v SMPI Eng.	DEH=6-Speed Man. NSG370 Trans.
				DDD=5-Speed HD Man. Trans.
				DDK=5-Speed HD Man. Trans.

AR = Use as required - = Non illustrated part # = New this model year

Windshield Wiper and Washer
Figure 23D-210

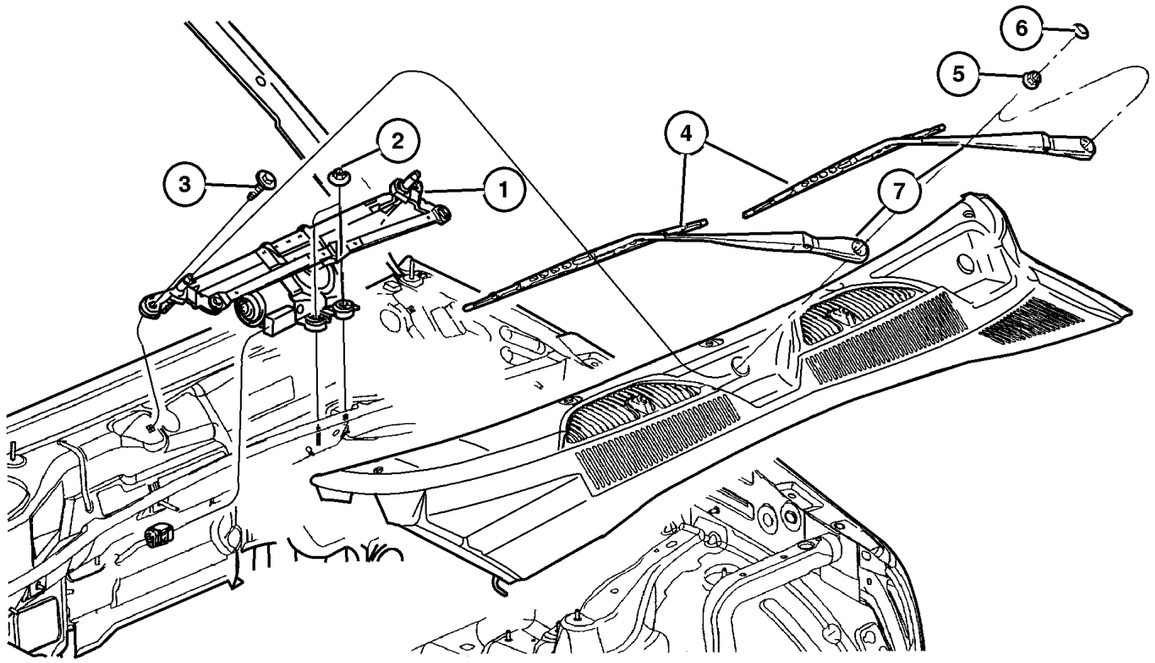

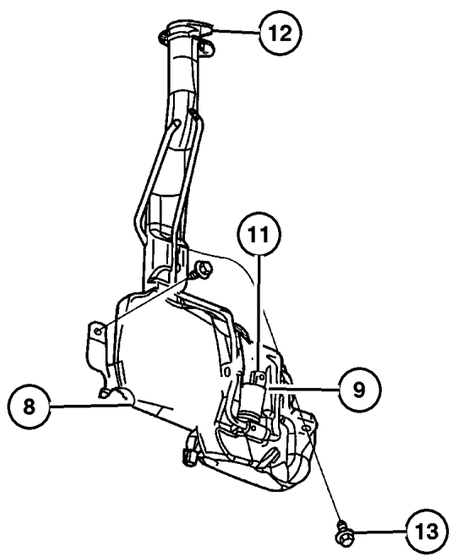

ITEM	PART NUMBER	QTY	LINE	SERIES	BODY	ENGINE	TRANS	TRIM	DESCRIPTION
1									MODULE, Wiper
	55155 894AE	1	U						
	55155 895AE	1	J, T						
2	3420 1358	2							NUT AND WASHER, Hex Nut-Sealing Washer, M6 x 1.00, M6x1.00
3									SCREW, Hex Flange Head, M6x1.00x35.00, (NOT SERVICED) (Not Serviced)
4									BLADE, Wiper
	5066 974AA	1	U						RIGHT & LEFT WITHOUT SPOILER UP TO 01-21-05
	5066 973AA	1	U						RHD, DRIVER SIDE (RIGHT) AFTER 01-21-05
5	6503 335	2							NUT, Hex, M10X1.25
6	55155 765AA	2							CAP, Wiper Arm Nut
7									ARM, Wiper
	5066 968AA	1	J						Europe, Left
	5066 969AA	1	U						Left
	5175 406AA	1	J, T						After 1-21-05, Right
	5175 407AA	1	J, T						Left
	5066 970AA	1	J, T						Up To 1-21-05, Right
	5066 971AA	1	U						Right
8	5161 320AC	1							RESERVOIR, Washer
9	5179 153AA	1							PUMP, Windshield Washer, Dual Outlet
-10	5152 030AA-	1							GROMMET, Windshield Washer Pump
11	5161 400AA	1							SENSOR, Washer Fluid Level
12	5161 321AA	1							CAP, Washer Reservoir
13	6034 716	2							SCREW AND WASHER, Hex Flange Head, .25-14x.875
-14	HWV00 532AB-AR								HOSE 1FT, Windshield Washer, 5/32"
-15									NOZZLE, Washer, Windshield
	55155 854AB-	2	U						
		2	J, T						
-16									HOSE, Washer Reservoir
	55155 892AC-	1	U						
		1	J, T						
-17	4778 097	2							GROMMET, WIPER FRAME
-18	6036 456AA-	1							RIVET, Wiper Cap to Core Support
-19	5161 326AA-	1							GROMMET, Washer Level Sensor

2006 Liberty (KJ)

SERIES	LINE	BODY	ENGINE	TRANSMISSION
H =HIGHLINE	T =JEEP - 2WD	74 =SPORT UTILITY 4-DR	EKG=3.7L V6 Eng.	DG6=4-Spd. Auto. 42RLE Trans.
M =MEDIUM	J =JEEP - 4WD		ENR=2.8L 4 Cyl Turbo Diesel Eng.	DGV=4-Spd. Auto. VLP Trans.
P =PREMIUM	U =JEEP - 4WD (RHD)		ENJ=2.5L 4 Cyl 16V Turbo Diesel Eng.	DGQ=5-Spd Auto. 5-45RFE Trans.
			ED1=2.4L 4 Cyl DOHC 16v SMPI Eng.	DEH=6-Speed Man. NSG370 Trans.
				DDD=5-Speed HD Man. Trans.
				DDK=5-Speed HD Man. Trans.

AR = Use as required - = Non illustrated part # = New this model year

Rear Wiper and Washer
Figure 23D-310

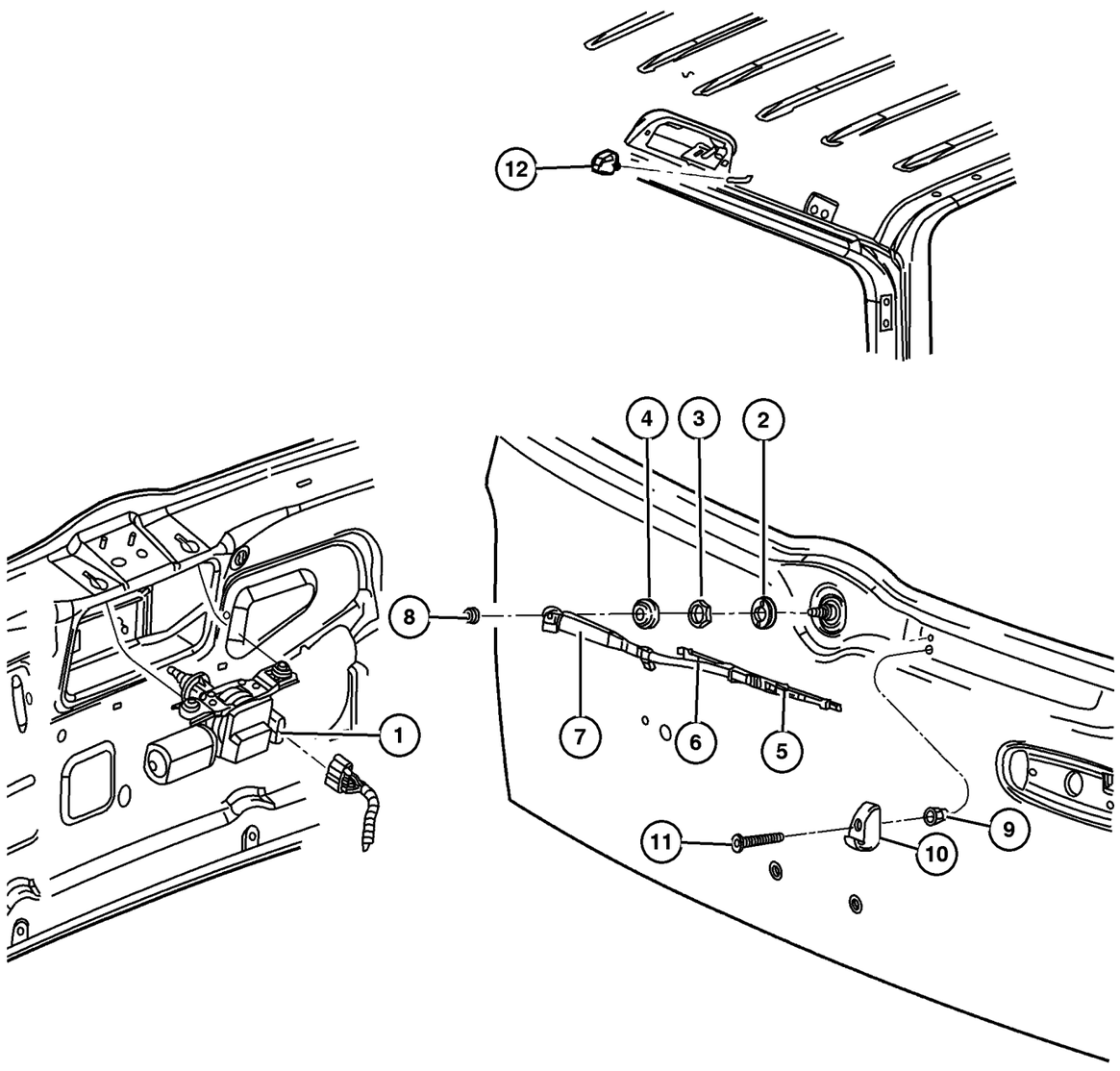

ITEM	PART NUMBER	QTY	LINE	SERIES	BODY	ENGINE	TRANS	TRIM	DESCRIPTION
1	55155 884AB	1							MOTOR, Wiper
2	55155 887AB	1							BEZEL, Wiper Motor
3	6507 801AA	1							NUT, Hex, M20x1.00
4	5507 6650	1							COVER, Rear Wiper Motor
5	5066 964AB	1							BLADE, Wiper
6	5066 965AA	1							ARM, Liftgate Wiper
7	5507 6650	1							COVER, Rear Wiper Motor
8	6500 165	1							NUT, Wiper Arm
9	6503 245	1							RIVET
10	55155 886AA	1							RAMP, Wiper Park
11	6505 062AA	1							SCREW, Pilot Point
12	55156 158AE	1							NOZZLE, Washer, Windshield
-13	HWV00 532AB-	AR							HOSE 1FT, Windshield Washer, 5/32"
-14	55156 260AA-	1							CLIP, Hose

2006 Liberty (KJ)

SERIES	LINE	BODY	ENGINE	TRANSMISSION
H =HIGHLINE	T =JEEP - 2WD	74 =SPORT UTILITY 4-DR	EKG=3.7L V6 Eng.	DG6=4-Spd. Auto. 42RLE Trans.
M =MEDIUM	J =JEEP - 4WD		ENR=2.8L 4 Cyl Turbo Diesel Eng.	DGV=4-Spd. Auto. VLP Trans.
P =PREMIUM	U =JEEP - 4WD (RHD)		ENJ=2.5L 4 Cyl 16V Turbo Diesel Eng.	DGQ=5-Spd Auto. 5-45RFE Trans.
			ED1=2.4L 4 Cyl DOHC 16v SMPI Eng.	DEH=6-Speed Man. NSG370 Trans.
				DDD=5-Speed HD Man. Trans.
				DDK=5-Speed HD Man. Trans.

AR = Use as required - = Non illustrated part # = New this model year

Group – 024

Air Conditioning & Heater

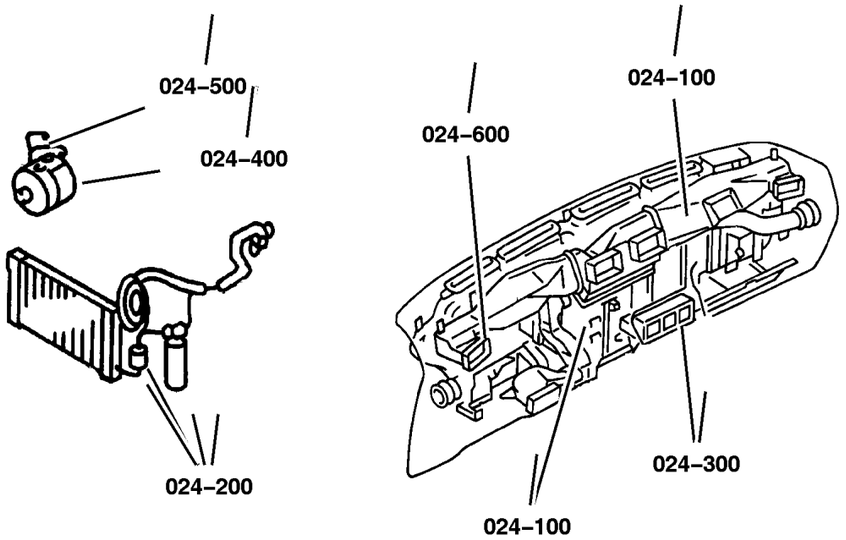

024–100 Air Conditioner and Heater Units	024–200 Air Conditioner and Heater Plumbing	024–300 Air Conditioner and Heater Controls	024–400 Air Conditioning Compressor
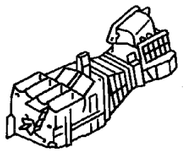	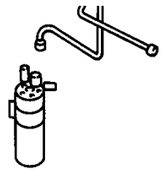	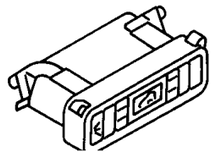	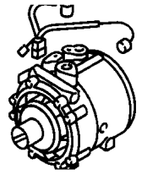
024–500 Air Conditioning Compressor Mounting 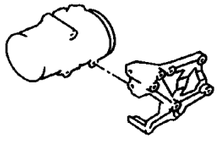	**024–600** Air Ducts and Outlets 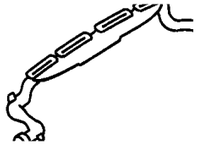		

GROUP 24 - Air Conditioning & Heater

Illustration Title — Group-Fig. No.

Air Conditioner and Heater Units
HEVAC Unit . . . . . Fig. 024-110

Air Conditioner and Heater Plumbing
Plumbing, Heater 3.7L Engine, LHD . . . . . Fig. 024-230
Plumbing, Heater 3.7L RHD . . . . . Fig. 024-240
Plumbing, Heater 2.8L Diesel Engine, LHD . . . . . Fig. 024-250
Plumbing, Heater 2.8L Diesel Engine RHD . . . . . Fig. 024-260
Plumbing,Air Conditioning 3.7L Engine, LHD . . . . . Fig. 024-285
Plumbing, Air Conditioning 3.7L Engine RHD . . . . . Fig. 024-288
Plumbing, Air Conditioning 2.8L Diesel Engine, LHD . . . . . Fig. 024-290
Plumbing, Air Conditioning 2.8L Diesel Engine, RHD . . . . . Fig. 024-295

Air Conditioner and Heater Controls
Control, Heater and Air Conditioning . . . . . Fig. 024-310

Air Conditioning Compressor
Compressor, 3.7L Engine . . . . . Fig. 024-410
Compressor, 2.8L Diesel Engine . . . . . Fig. 024-430

Air Conditioning Compressor Mounting
Compressor Mounting, 3.7L Engine . . . . . Fig. 024-510
Compressor Mounting, 2.8L Diesel Engine . . . . . Fig. 024-530

Air Ducts and Outlets
Air Distribution Ducts . . . . . Fig. 024-610

HEVAC Unit
Figure 024-110

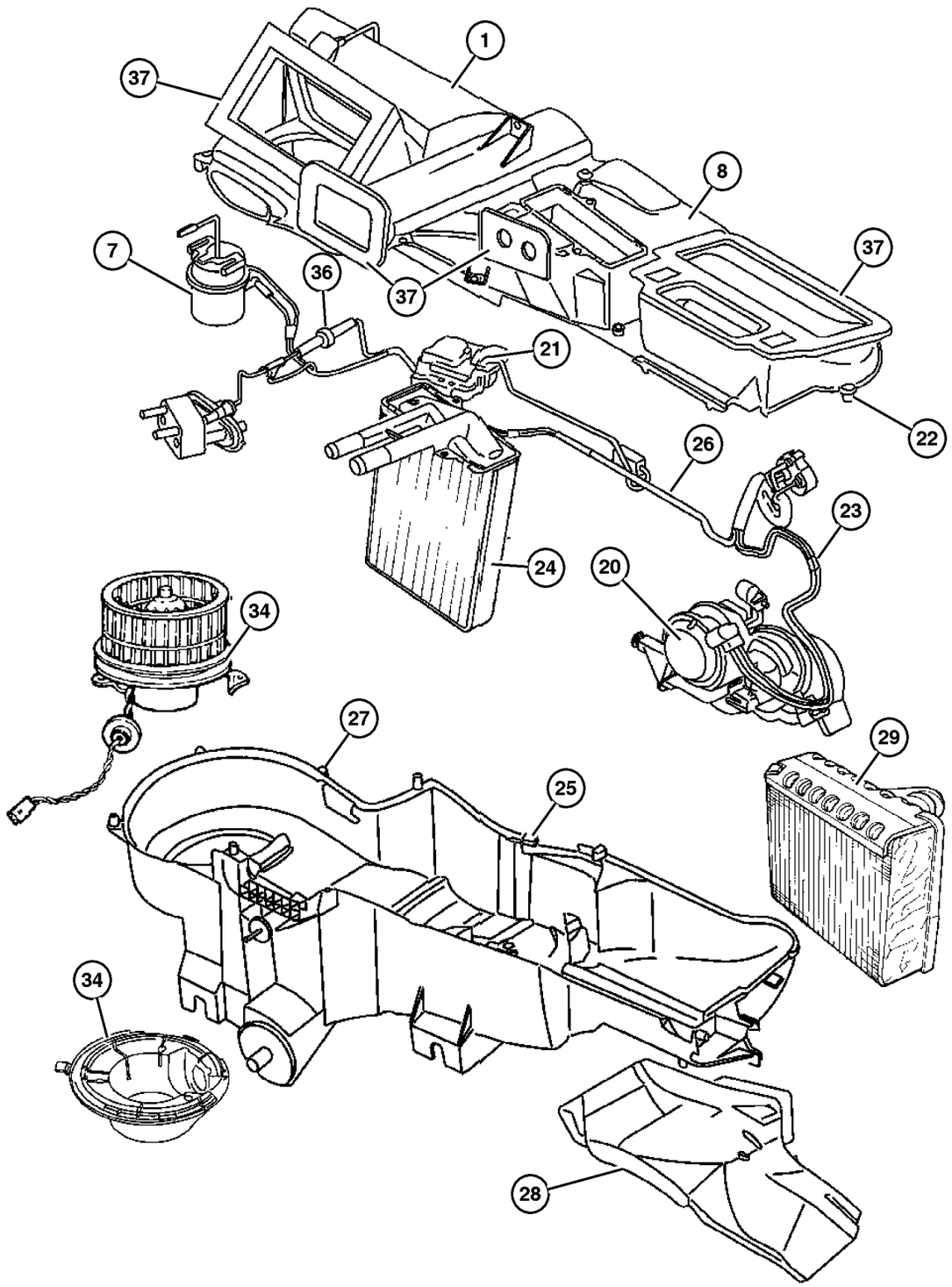

ITEM	PART NUMBER	QTY	LINE	SERIES	BODY	ENGINE	TRANS	TRIM	DESCRIPTION
1									HOUSING, Air Inlet
	5066 496AA	1	J, T						Includes items 2-6
	5066 507AA	1	U						
-2									HOUSING, Air Inlet, (NOT SERVICED) (Not Serviced)
-3									DOOR, Air Inlet, (NOT SERVICED) (Not Serviced)
-4									CAM, Recirculating Door, (NOT SERVICED) (Not Serviced)
-5									LEVER, A/C Recirculation Door, (NOT SERVICED) (Not Serviced)
-6									SEAL, Air Inlet, (NOT SERVICED) (Not Serviced)
7									ACTUATOR, A/C and Heater Recirculation, Vacuum
	5066 510AA	1	J, T						Recirculation [RHD], Vacuum
	5066 511AA	1	U						
8	5189 336AA	1	J, T						HOUSING KIT, A/C and Heater, Includes items 9-19
-9									HOUSING, A/C Upper, (NOT SERVICED) (Not Serviced)
-10									DOOR, Panel, (NOT SERVICED) (Not Serviced)
-11									LEVER, Panel Door, (NOT SERVICED) (Not Serviced)
-12									SEAL, Evaporator, Tubes To Dash, (NOT SERVICED) (Not Serviced)
-13									SEAL, Defroster To Panel, (NOT SERVICED) (Not Serviced)
-14									HOUSING, A/C Lower, (NOT SERVICED) (Not Serviced)
-15									STUD, A/C and Heater Housing Mtg., (NOT SERVICED) (Not Serviced)
-16									WASHER, A/C Unit Mounting Stud, (NOT SERVICED) (Not Serviced)
-17									DOOR, Blend Air, (NOT SERVICED) (Not Serviced)
-18									DOOR, A/C and Heater Mode, (NOT SERVICED) (Not Serviced)
-19									LINK, Blend Door, (NOT SERVICED) (Not Serviced)
20	5066 518AA	1	J, T						ACTUATOR, A/C and Heater, Floor and defrost door, Vacuum

2006 Liberty (KJ)

SERIES	LINE	BODY	ENGINE	TRANSMISSION
H =HIGHLINE	T =JEEP - 2WD	74 =SPORT UTILITY 4-DR	EKG=3.7L V6 Eng.	DG6=4-Spd. Auto. 42RLE Trans.
M =MEDIUM	J =JEEP - 4WD		ENR=2.8L 4 Cyl Turbo Diesel Eng.	DGV=4-Spd. Auto. VLP Trans.
P =PREMIUM	U =JEEP - 4WD (RHD)		ENJ=2.5L 4 Cyl 16V Turbo Diesel Eng.	DGQ=5-Spd Auto. 5-45RFE Trans.
			ED1=2.4L 4 Cyl DOHC 16v SMPI Eng.	DEH=6-Speed Man. NSG370 Trans.
				DDD=5-Speed HD Man. Trans.
				DDK=5-Speed HD Man. Trans.

HEVAC Unit
Figure 024-110

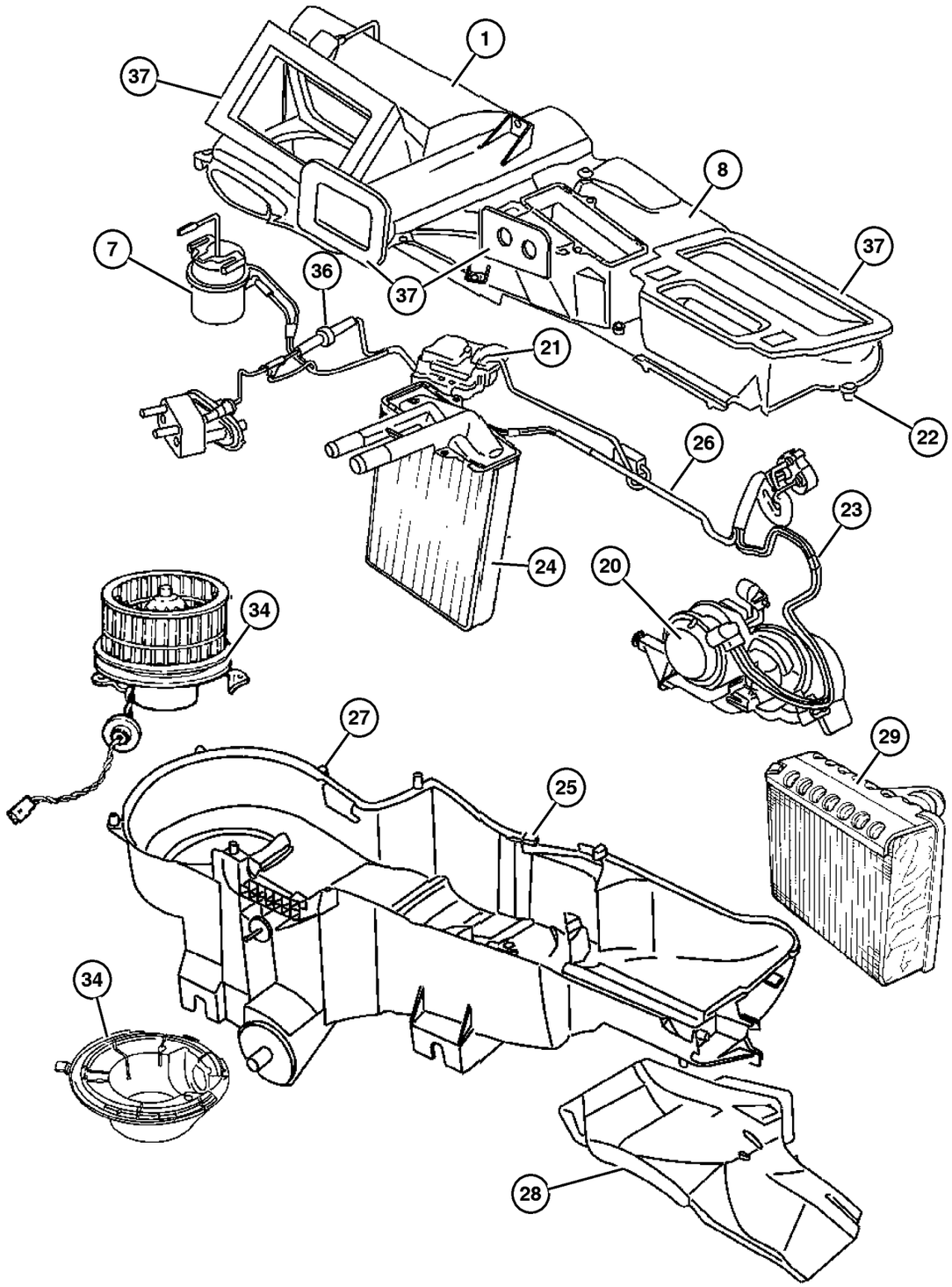

ITEM	PART NUMBER	QTY	LINE	SERIES	BODY	ENGINE	TRANS	TRIM	DESCRIPTION
21									ACTUATOR, A/C and Heater
	5174 382AA	1	J, T						Blend door, Electric Motor
	5174 387AA	1	U						Blend door [RHD], Electric Motor
22	4734 227	1	J, T						SCREW, Hex Head, M4.8-1.59x19
23	5166 196AA	1	J, T						HARNESS, Jumper
24									HEATER, Core Kit
	5066 555AB	1	J, T						
	5093 937AA	1				EN0			
25	4644 388	4	J, T						CLIP, A/C Heater Housing
26	5066 531AA	1	J, T						VACUUM HARNESS, Heater and A/C
27	6506 035AA	8							NUT, U, M6x1
28	5066 535AA	1	J, T						DUCT, Floor
29	5189 335AA	1	J, T						EVAPORATOR KIT, Air Conditioning, Includes items 31-34
-30									LINER, Evaporator, (NOT SERVICED) (Not Serviced)
-31									EVAPORATOR, Air Conditioning, (NOT SERVICED) (Not Serviced)
-32									ISOLATOR, Evaporator Tube, (NOT SERVICED) (Not Serviced)
-33									SEAL, Evaporator Tube, (NOT SERVICED) (Not Serviced)
34									MOTOR, Blower with Wheel
	5139 720AA	1	J, T						
	5139 721AA	1	U						[RHD]
-35	5139 719AA-	1	J, T						RESISTOR, A/C Heater
36	4549 209	1	J, T						VALVE PACKAGE, Check
37	5071 491AA	1	J, T						SEAL KIT, A/C And Heater Unit, Includes panel defrost,drain tube, heater tube and evaporator tube seals
-38									HOSE AND VALVE, Vacuum
	55038 432AD-	1	J, T						Air Conditioning
	55038 433AE-	1	U						Air Conditioning
-39	6507 856AA-	1				EK0			SCREW AND WASHER

2006 Liberty (KJ)

SERIES	LINE	BODY	ENGINE	TRANSMISSION
H =HIGHLINE	T =JEEP - 2WD	74 =SPORT UTILITY 4-DR	EKG=3.7L V6 Eng.	DG6=4-Spd. Auto. 42RLE Trans.
M =MEDIUM	J =JEEP - 4WD		ENR=2.8L 4 Cyl Turbo Diesel Eng.	DGV=4-Spd. Auto. VLP Trans.
P =PREMIUM	U =JEEP - 4WD (RHD)		ENJ=2.5L 4 Cyl 16V Turbo Diesel Eng.	DGQ=5-Spd Auto. 5-45RFE Trans.
			ED1=2.4L 4 Cyl DOHC 16v SMPI Eng.	DEH=6-Speed Man. NSG370 Trans.
				DDD=5-Speed HD Man. Trans.
				DDK=5-Speed HD Man. Trans.

Plumbing, Heater 3.7L Engine, LHD
Figure 024-230

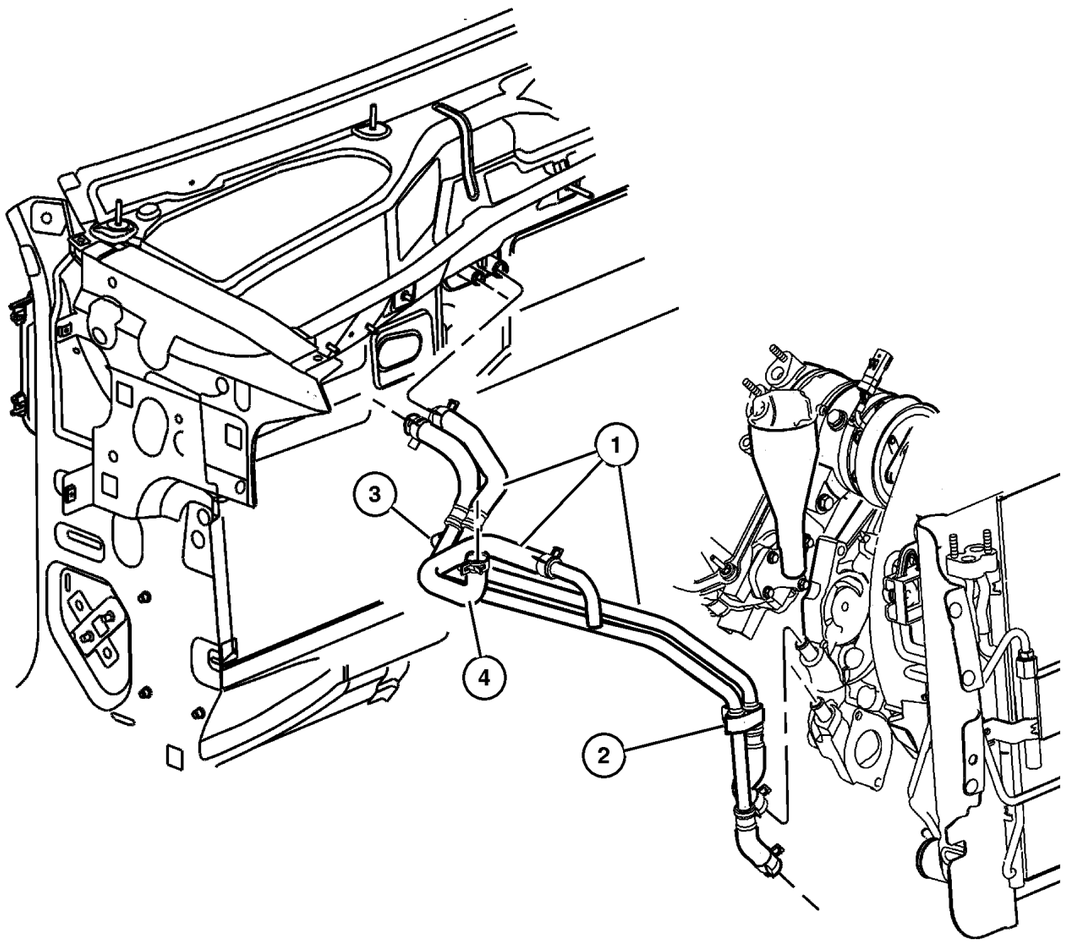

ITEM	PART NUMBER	QTY	LINE	SERIES	BODY	ENGINE	TRANS	TRIM	DESCRIPTION
NOTE:									
Sales Codes:									
[EK0]=All 3.7L V-6 Engines									
1	55038 331AG	1	J, T			EK0			HOSE, Heater Supply, Includes item 4
2	5072 449AA	1	J, T			EK0			BRACKET
3	5072 450AB	1	J, T			EK0			BRACKET
4	5072 448AA	1	J, T			EK0			HOSE, Hot Bottle

2006 Liberty (KJ)

SERIES	LINE	BODY	ENGINE	TRANSMISSION
H =HIGHLINE	T =JEEP - 2WD	74 =SPORT UTILITY 4-DR	EKG=3.7L V6 Eng.	DG6=4-Spd. Auto. 42RLE Trans.
M =MEDIUM	J =JEEP - 4WD		ENR=2.8L 4 Cyl Turbo Diesel Eng.	DGV=4-Spd. Auto. VLP Trans.
P =PREMIUM	U =JEEP - 4WD (RHD)		ENJ=2.5L 4 Cyl 16V Turbo Diesel Eng.	DGQ=5-Spd Auto. 5-45RFE Trans.
			ED1=2.4L 4 Cyl DOHC 16v SMPI Eng.	DEH=6-Speed Man. NSG370 Trans.
				DDD=5-Speed HD Man. Trans.
				DDK=5-Speed HD Man. Trans.

Plumbing, Heater 3.7L RHD
Figure 024-240

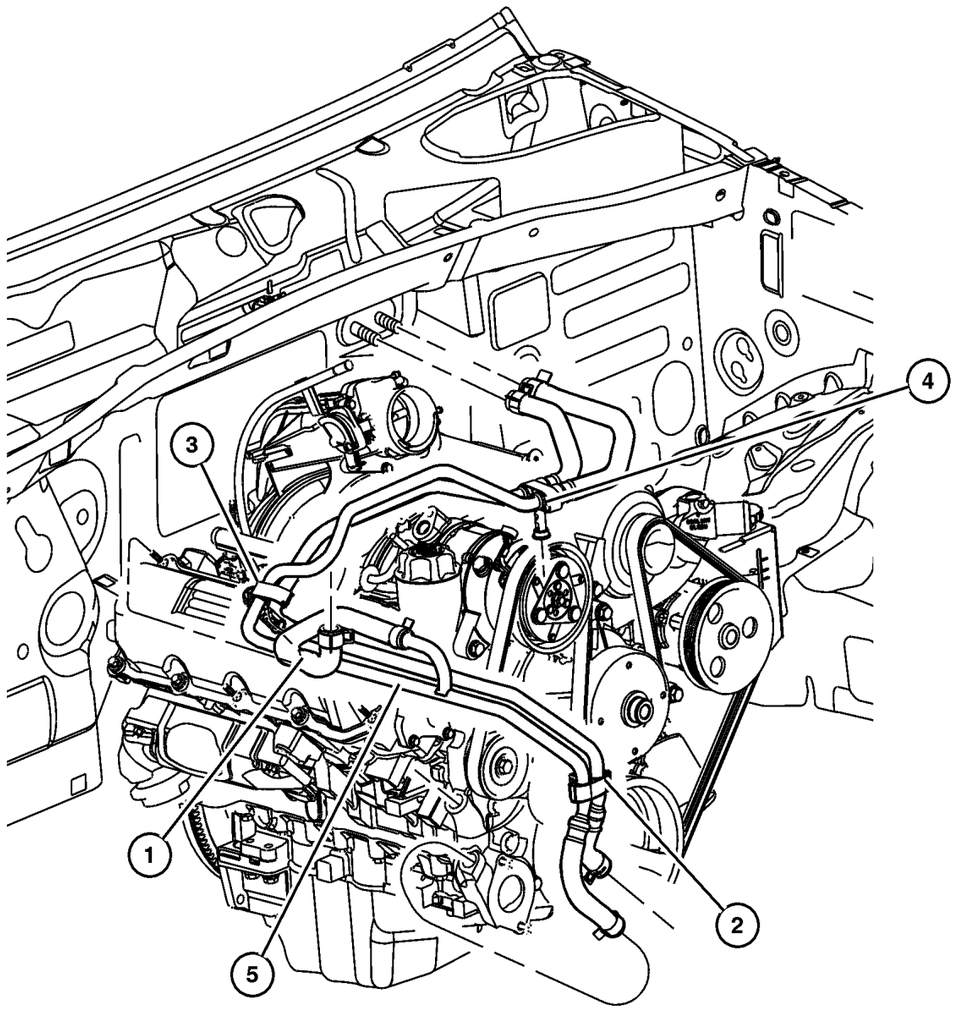

ITEM	PART NUMBER	QTY	LINE	SERIES	BODY	ENGINE	TRANS	TRIM	DESCRIPTION
Note; Sales Codes									
[EK0]= All 3.7L, 6 Cylinder Gas Engines									
1	5072 448AA	1	J, T			EK0			HOSE, Hot Bottle
2	5072 449AA	1	J, T			EK0			BRACKET, Oil Fill
3	5072 450AB	1	J, T			EK0			BRACKET, Valve Cover
4	4754 806	1	U						BRACKET, Intake Manifold
5	55038 334AG	1	U			EK0			HOSE, Heater Supply

2006 Liberty (KJ)

SERIES	LINE	BODY	ENGINE	TRANSMISSION
H =HIGHLINE	T =JEEP - 2WD	74 =SPORT UTILITY 4-DR	EKG=3.7L V6 Eng.	DG6=4-Spd. Auto. 42RLE Trans.
M =MEDIUM	J =JEEP - 4WD		ENR=2.8L 4 Cyl Turbo Diesel Eng.	DGV=4-Spd. Auto. VLP Trans.
P =PREMIUM	U =JEEP - 4WD (RHD)		ENJ=2.5L 4 Cyl 16V Turbo Diesel Eng.	DGQ=5-Spd Auto. 5-45RFE Trans.
			ED1=2.4L 4 Cyl DOHC 16v SMPI Eng.	DEH=6-Speed Man. NSG370 Trans.
				DDD=5-Speed HD Man. Trans.
				DDK=5-Speed HD Man. Trans.

Plumbing, Heater 2.8L Diesel Engine, LHD
Figure 024-250

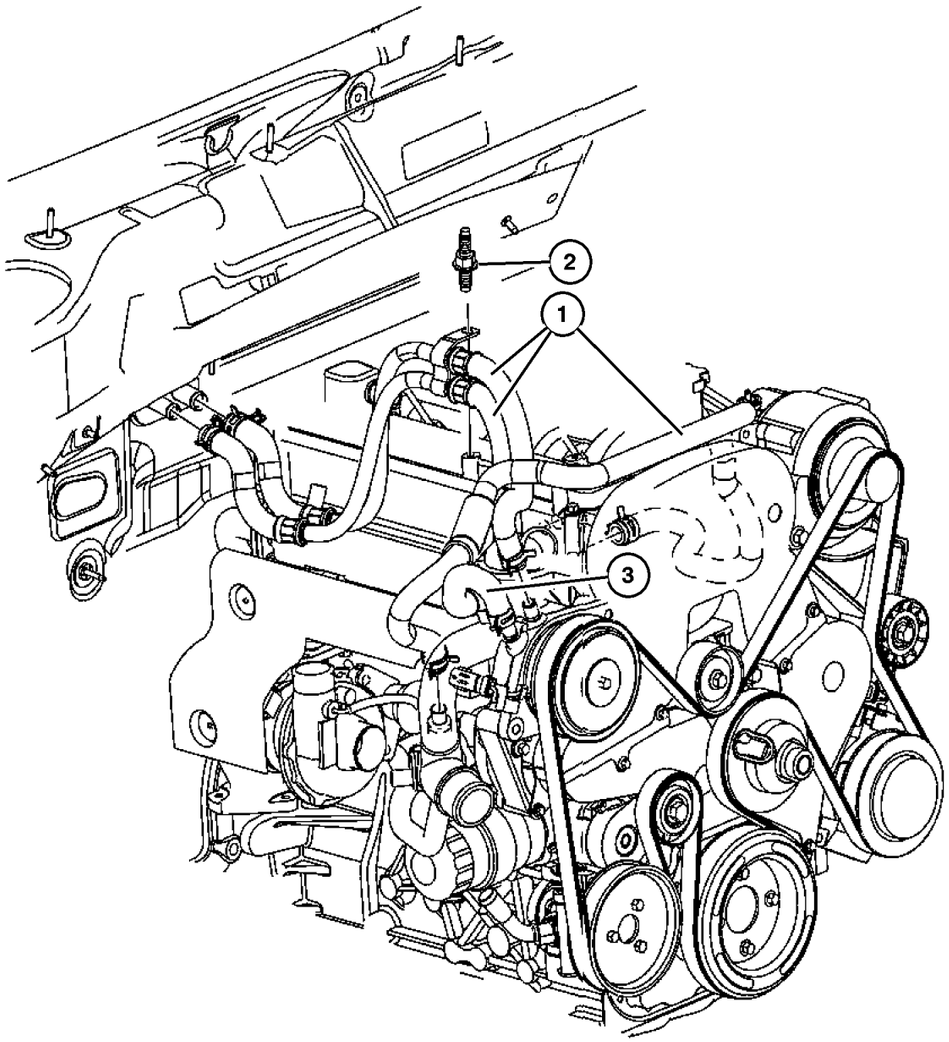

ITEM	PART NUMBER	QTY	LINE	SERIES	BODY	ENGINE	TRANS	TRIM	DESCRIPTION
1	55037 738AD	1	J, T			EN0			HOSE, Heater Supply
2	6501 474	1	J, U						BOLT, Hex Head, M8x1.25x16
3	5142 787AA	1				EN0			HOSE

2006 Liberty (KJ)

SERIES	LINE	BODY	ENGINE	TRANSMISSION
H =HIGHLINE	T =JEEP - 2WD	74 =SPORT UTILITY 4-DR	EKG=3.7L V6 Eng.	DG6=4-Spd. Auto. 42RLE Trans.
M =MEDIUM	J =JEEP - 4WD		ENR=2.8L 4 Cyl Turbo Diesel Eng.	DGV=4-Spd. Auto. VLP Trans.
P =PREMIUM	U =JEEP - 4WD (RHD)		ENJ=2.5L 4 Cyl 16V Turbo Diesel Eng.	DGQ=5-Spd Auto. 5-45RFE Trans.
			ED1=2.4L 4 Cyl DOHC 16v SMPI Eng.	DEH=6-Speed Man. NSG370 Trans.
				DDD=5-Speed HD Man. Trans.
				DDK=5-Speed HD Man. Trans.

Plumbing, Heater 2.8L Diesel Engine RHD
Figure 024-260

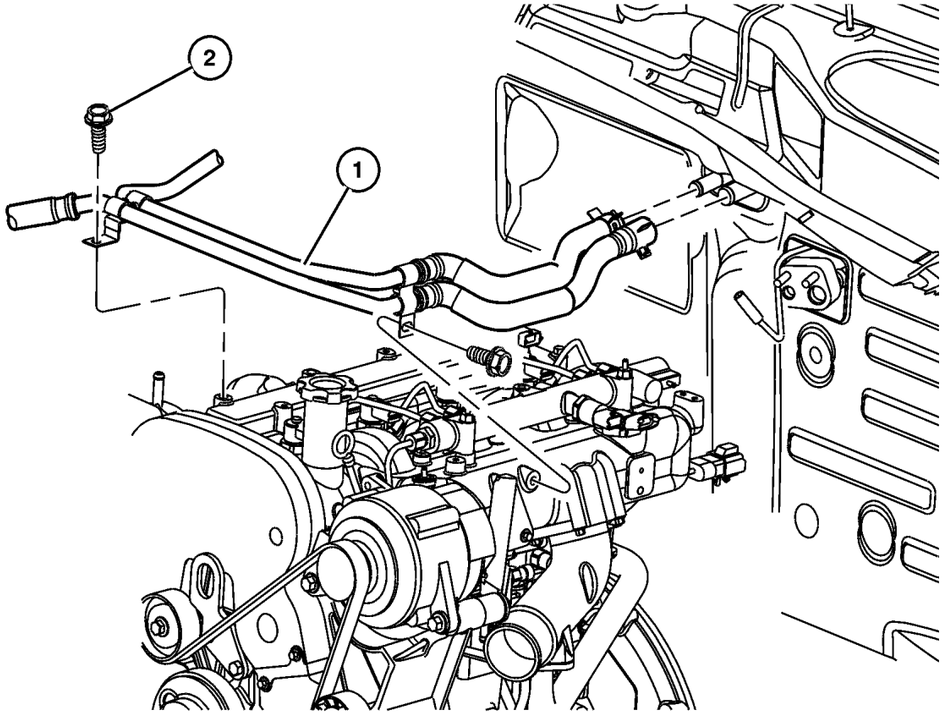

ITEM	PART NUMBER	QTY	LINE	SERIES	BODY	ENGINE	TRANS	TRIM	DESCRIPTION
1	55037 739AC	1	U			EN0			HOSE, Heater Supply
2	6501 474	1	J, U						BOLT, Hex Head, M8x1.25x16

2006 Liberty (KJ)

SERIES	LINE	BODY	ENGINE	TRANSMISSION
H =HIGHLINE	T =JEEP - 2WD	74 =SPORT UTILITY 4-DR	EKG=3.7L V6 Eng.	DG6=4-Spd. Auto. 42RLE Trans.
M =MEDIUM	J =JEEP - 4WD		ENR=2.8L 4 Cyl Turbo Diesel Eng.	DGV=4-Spd. Auto. VLP Trans.
P =PREMIUM	U =JEEP - 4WD (RHD)		ENJ=2.5L 4 Cyl 16V Turbo Diesel Eng.	DGQ=5-Spd Auto. 5-45RFE Trans.
			ED1=2.4L 4 Cyl DOHC 16v SMPI Eng.	DEH=6-Speed Man. NSG370 Trans.
				DDD=5-Speed HD Man. Trans.
				DDK=5-Speed HD Man. Trans.

Plumbing,Air Conditioning 3.7L Engine, LHD
Figure 024-285

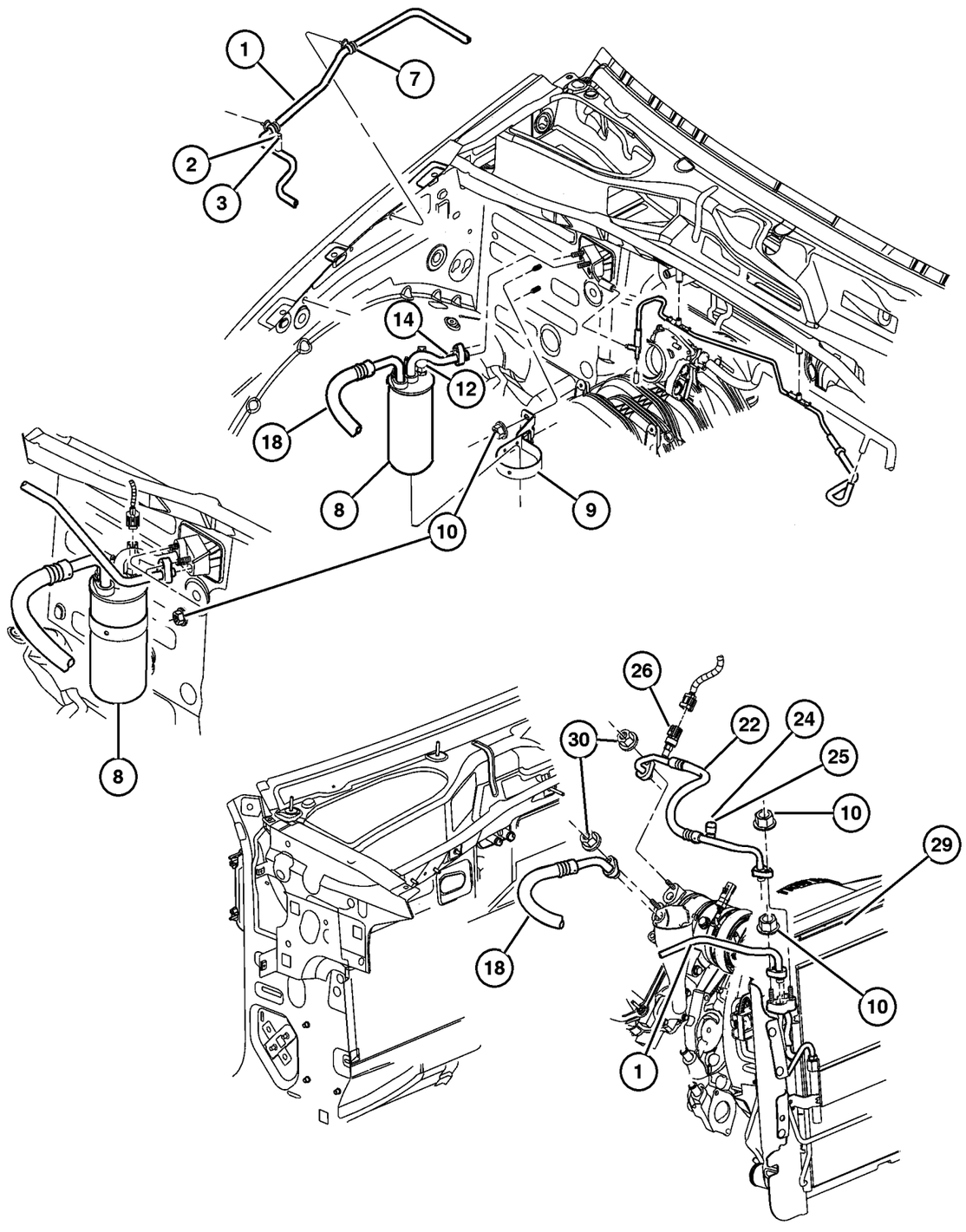

ITEM	PART NUMBER	QTY	LINE	SERIES	BODY	ENGINE	TRANS	TRIM	DESCRIPTION
Note; Sales Codes									
[EK0]= All 3.7L, 6 Cylinder Gas Engines									
1	55037 809AG	1	J, T			EK0			LINE, A/C Liquid
2	5101 791AA	1	J, T			EK0			VALVE, Charging
3	4882 335	1	J, T			EK0			CAP, A/C Check Valve
-4	5183 657AA-	1	J, T			EK0			O RING KIT, Quick Connect
-5	5174 115AA-	1	J, T			EK0			SEAL
-6	5139 487AA-	1	J, T			EK0			O RING, A/C Line
7	5602 1384	2							CLIP, Wiring
8	5189 452AA	1	J, T			EK0			ACCUMULATOR, Suction Line
9	55037 764AC	1	J, T						BRACKET, Accumulator
10	6506 152AA	2	J, T						NUT AND CONED WASHER, Hex, M8x1.25
-11	5264 638	1	J, T			EK0			VALVE, Charging
12	5170 126AA	1	J, T			EK0			SWITCH, A/C Cycling
-13	5012 348AA-	1	J, T			EK0			O RING, A/C Suction Line
14	5189 744AA	1	J, T			EK0			LINE, A/C Suction
-15	5139 486AA-	1	J, T			EK0			O RING, A/C Line, At Accumulator
-16	5072 140AA-	1	J, T			EK0			SEAL, A/C Line, At Accumulator
-17	5183 716AA-	1	J, T			EK0			O RING KIT, Quick Connect, At Evaporator
18	5189 745AA	1	J, T			EK0			LINE, A/C Suction
-19	5066 498AA-	1	J, T			EK0			GASKET & O RING KIT, A/C Line, At Compressor
-20	5139 486AA-	1	J, T			EK0			O RING, A/C Line, At Accumulator
-21	5072 140AA-	1	J, T			EK0			SEAL, A/C Line, At Accumulator
22	55037 843AB	1				EK0			LINE, A/C Discharge
-23	5139 487AA-	2				EK0			O RING, A/C Line
24	5264 638	1	J, T			EK0			VALVE, Charging
25	5264 642	1				EK0			CAP, A/C Check Valve
26	5174 039AB	1				EK0			VALVE, A/C pressure Transducer, Discharge Line
-27	5183 358AA-	1				EK0			O RING
-28	5174 115AA-	2				EK0			SEAL
29	5183 560AA	1				EK0			CONDENSER, Air Conditioning
30	6506 152AA	2							NUT AND CONED WASHER, Hex, M8x1.25

2006 Liberty (KJ)

SERIES	LINE	BODY	ENGINE	TRANSMISSION
H =HIGHLINE	T =JEEP - 2WD	74 =SPORT UTILITY 4-DR	EKG=3.7L V6 Eng.	DG6=4-Spd. Auto. 42RLE Trans.
M =MEDIUM	J =JEEP - 4WD		ENR=2.8L 4 Cyl Turbo Diesel Eng.	DGV=4-Spd. Auto. VLP Trans.
P =PREMIUM	U =JEEP - 4WD (RHD)		ENJ=2.5L 4 Cyl 16V Turbo Diesel Eng.	DGQ=5-Spd Auto. 5-45RFE Trans.
			ED1=2.4L 4 Cyl DOHC 16v SMPI Eng.	DEH=6-Speed Man. NSG370 Trans.
				DDD=5-Speed HD Man. Trans.
				DDK=5-Speed HD Man. Trans.

Plumbing, Air Conditioning 3.7L Engine RHD
Figure 024-288

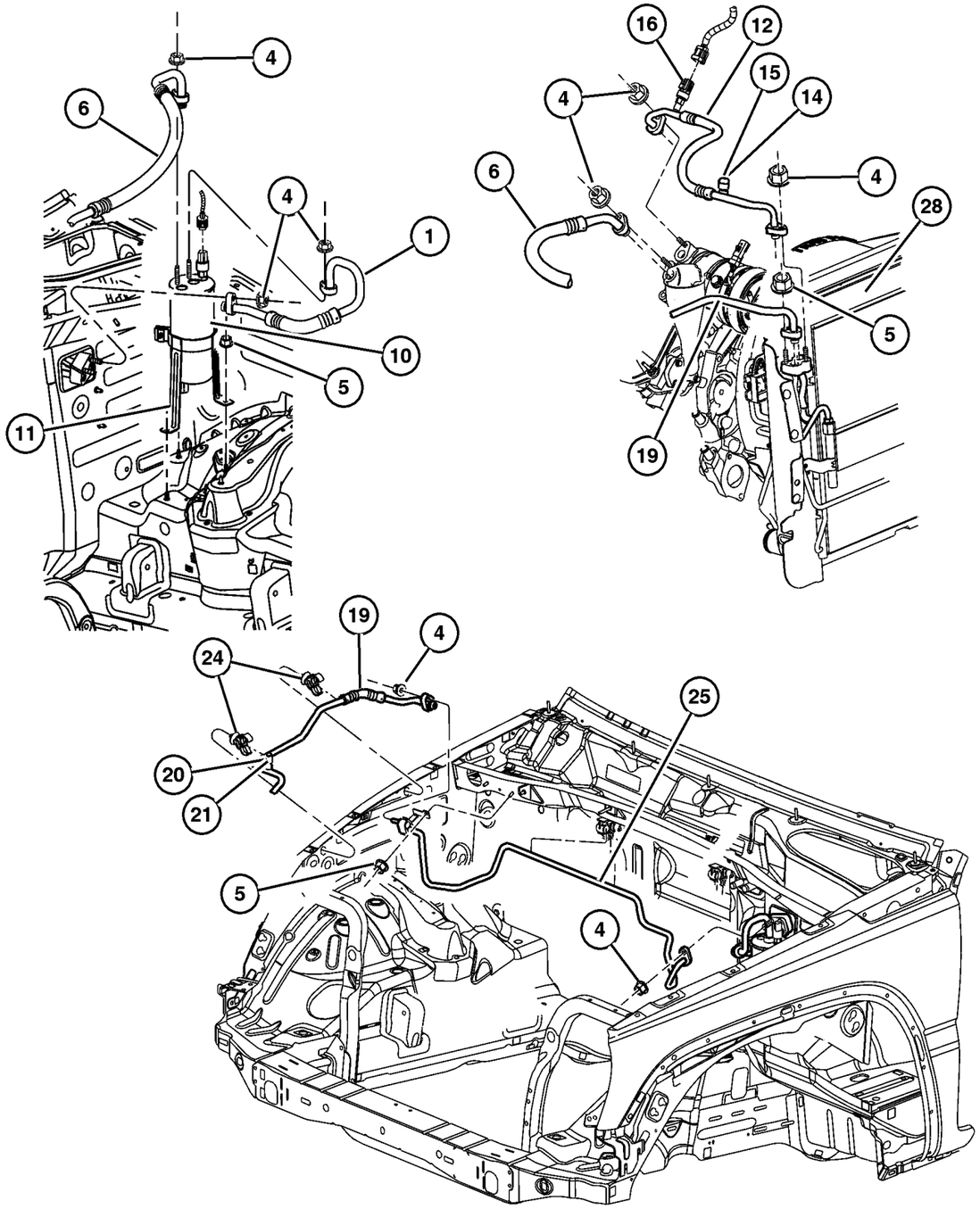

ITEM	PART NUMBER	QTY	LINE	SERIES	BODY	ENGINE	TRANS	TRIM	DESCRIPTION
Note; Sales Codes									
[EK0]= All 3.7L, 6 Cylinder Gas Engines									
1	55037 595AD	1	U						LINE, A/C Suction
-2	5072 140AA-	1	U			EK0			SEAL, A/C Line, Suction Line
-3	5139 486AA-	2	U			EK0			O RING, A/C Line, Suction Line
4	6506 152AA	1	U						NUT AND CONED WASHER, Hex, M8x1.25
5	6101 447	1	U						NUT AND WASHER, M6x1.00
6	55037 845AA	1	U			EK0			LINE, A/C Suction
-7	5139 486AA-	2	U			EK0			O RING, A/C Line
-8	5183 715AA-	1	U			EK0			GASKET, A/C Line
-9	5072 140AA-	1	U			EK0			SEAL, A/C Line
10	55037 471AD	1	U						ACCUMULATOR, Air Conditioning
11	55037 764AC	1	J, T						BRACKET, Accumulator
12	55037 843AB	1				EK0			LINE, A/C Discharge
-13	5139 487AA-	2	U			EK0			O RING, A/C Line
14	5264 638	2				EK0			VALVE, Charging
15	5264 642	1				EK0			CAP, A/C Check Valve
16	5174 039AB	1				EK0			VALVE, A/C pressure Transducer
-17	5183 358AA-	1				EK0			O RING
-18	5174 115AA-	2	U			EK0			SEAL
19	55037 810AE	1	U			EK0			LINE, A/C Liquid
20	4882 335	1	U			EK0			CAP, A/C Check Valve
21	5101 791AA	1	U			EK0			VALVE, Charging
-22	5139 487AA-	2	U			EK0			O RING, A/C Line
-23	5174 115AA-	2	U			EK0			SEAL
24	5602 1384	2							CLIP
25	55037 811AD	1	U						LINE, A/C Liquid
-26	5139 487AA-	2	U			EK0			O RING, A/C Line
-27	5103 428AA-	2	U						GASKET, A/C Line
28	5183 560AA	1				EK0			CONDENSER, Air Conditioning

2006 Liberty (KJ)

SERIES	LINE	BODY	ENGINE	TRANSMISSION
H =HIGHLINE	T =JEEP - 2WD	74 =SPORT UTILITY 4-DR	EKG=3.7L V6 Eng.	DG6=4-Spd. Auto. 42RLE Trans.
M =MEDIUM	J =JEEP - 4WD		ENR=2.8L 4 Cyl Turbo Diesel Eng.	DGV=4-Spd. Auto. VLP Trans.
P =PREMIUM	U =JEEP - 4WD (RHD)		ENJ=2.5L 4 Cyl 16V Turbo Diesel Eng.	DGQ=5-Spd Auto. 5-45RFE Trans.
			ED1=2.4L 4 Cyl DOHC 16v SMPI Eng.	DEH=6-Speed Man. NSG370 Trans.
				DDD=5-Speed HD Man. Trans.
				DDK=5-Speed HD Man. Trans.

Plumbing, Air Conditioning 2.8L Diesel Engine, LHD
Figure 024-290

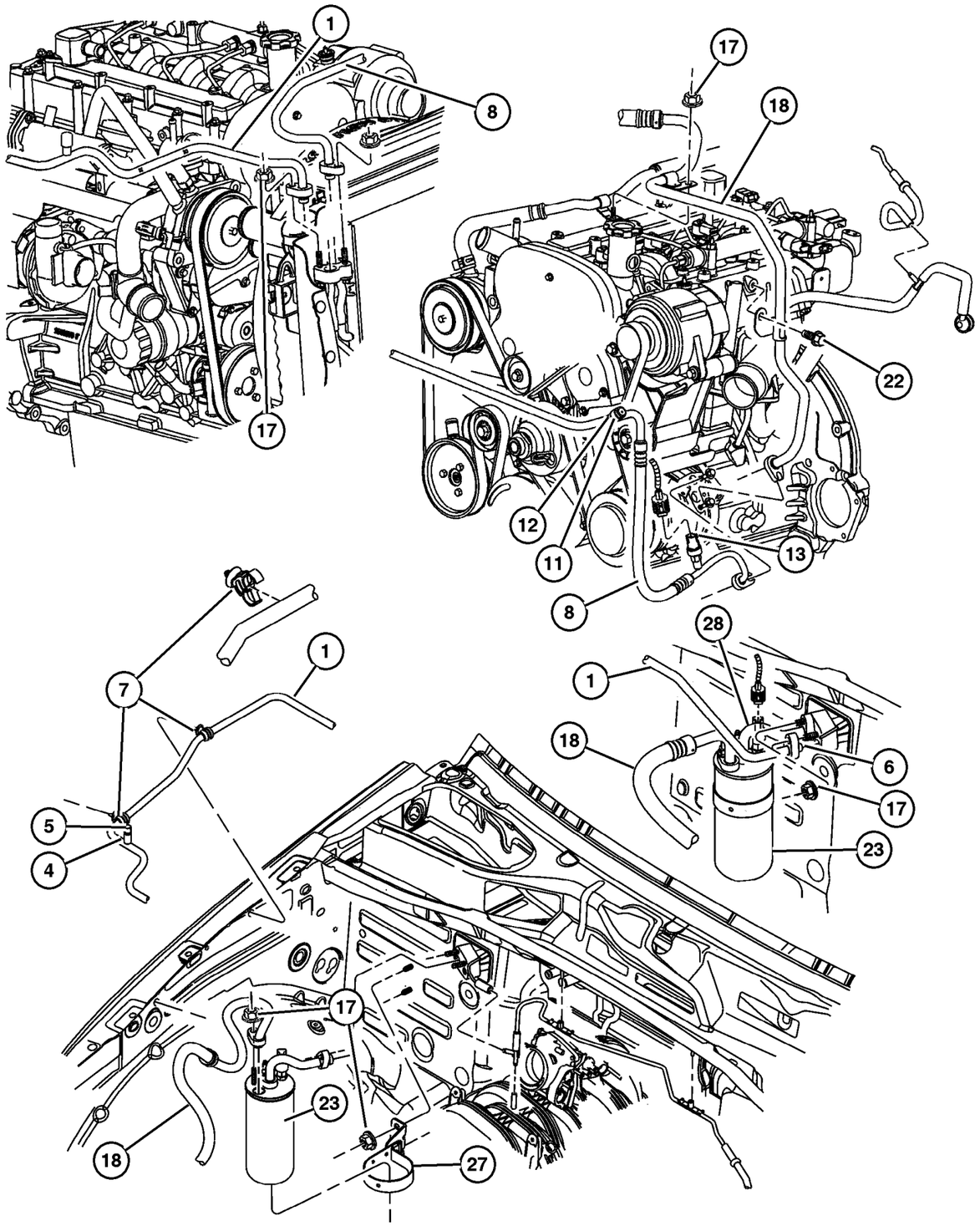

ITEM	PART NUMBER	QTY	LINE	SERIES	BODY	ENGINE	TRANS	TRIM	DESCRIPTION
1	55037 817AF	1	J, T			EN0			LINE, A/C Liquid
-2	5174 115AA-	1	J, T			EN0			SEAL, Liquid line to condenser
-3	5139 487AA-	1	J, T			EN0			O RING, A/C Line, Liquid line to condenser
4	5101 791AA	1	J, T			EN0			VALVE, Charging
5	4882 335	1	J, T			EN0			CAP, A/C Check Valve
6	5183 657AA	1	J, T			EN0			O RING KIT, Quick Connect, Liquid line to evaporator
7	5602 1384	1				EN0			CLIP, Liquid Line Attaching
8	55037 818AC	1				EN0			LINE, A/C Discharge
-9	5139 487AA-	1	J, T			EN0			O RING, A/C Line, 1/2 inch - Red, Discharge line to condenser
-10	5174 115AA-	1	J, T			EN0			SEAL, Discharge line to condenser
11	4723 029	1				EN0			VALVE, Check
12	5264 642	1				EN0			CAP, A/C Check Valve
13	5174 039AB	1				EN0			VALVE, A/C pressure Transducer
-14	5183 358AA-	1				EN0			O RING, Valve
-15	5139 487AA-	1	J, T			EN0			O RING, A/C Line, Discharge line to compressor
-16	5174 115AA-	1	J, T			EN0			SEAL, Discharge line to compressor
17	6506 152AA	2	J, T						NUT AND CONED WASHER, Hex, M8x1.25
18	55037 737AD	1	J, T			EN0			LINE, A/C Suction
-19	5139 486AA-	1	J, T			EN0			O RING, A/C Line, 5/8 inch - Red, Suction line to compressor
-20	5072 140AA-	1	J, T			EN0			SEAL, A/C Line, Suction line to accumulator
-21	5139 486AA-	1	J, T			EN0			O RING, A/C Line, Suction line to accumulator
22	6501 474	1	J, U						BOLT, Hex Head, M8x1.25x16
23	5189 452AA	1	J, T			EN0			ACCUMULATOR, Suction Line, Includes valve and switch
-24	5264 638	1	J, T			EN0			VALVE, Charging
-25	5170 126AA-	1	J, T			EN0			SWITCH, A/C Cycling
-26	5012 348AA-	1	J, T			EN0			O RING, A/C Suction Line, Cycling switch
27	55037 764AC	1	J, T						BRACKET, Accumulator
28	5189 744AA	1	J, T			EN0			LINE, A/C Suction
-29	5139 486AA-	1	J, T			EN0			O RING, A/C Line, Suction line to accumulator
-30	5072 140AA-	1	J, T			EN0			SEAL, A/C Line, Suction line to accumulator

2006 Liberty (KJ)

SERIES	LINE	BODY	ENGINE	TRANSMISSION
H =HIGHLINE	T =JEEP - 2WD	74 =SPORT UTILITY 4-DR	EKG=3.7L V6 Eng.	DG6=4-Spd. Auto. 42RLE Trans.
M =MEDIUM	J =JEEP - 4WD		ENR=2.8L 4 Cyl Turbo Diesel Eng.	DGV=4-Spd. Auto. VLP Trans.
P =PREMIUM	U =JEEP - 4WD (RHD)		ENJ=2.5L 4 Cyl 16V Turbo Diesel Eng.	DGQ=5-Spd Auto. 5-45RFE Trans.
			ED1=2.4L 4 Cyl DOHC 16v SMPI Eng.	DEH=6-Speed Man. NSG370 Trans.
				DDD=5-Speed HD Man. Trans.
				DDK=5-Speed HD Man. Trans.

Plumbing, Air Conditioning 2.8L Diesel Engine, LHD
Figure 024-290

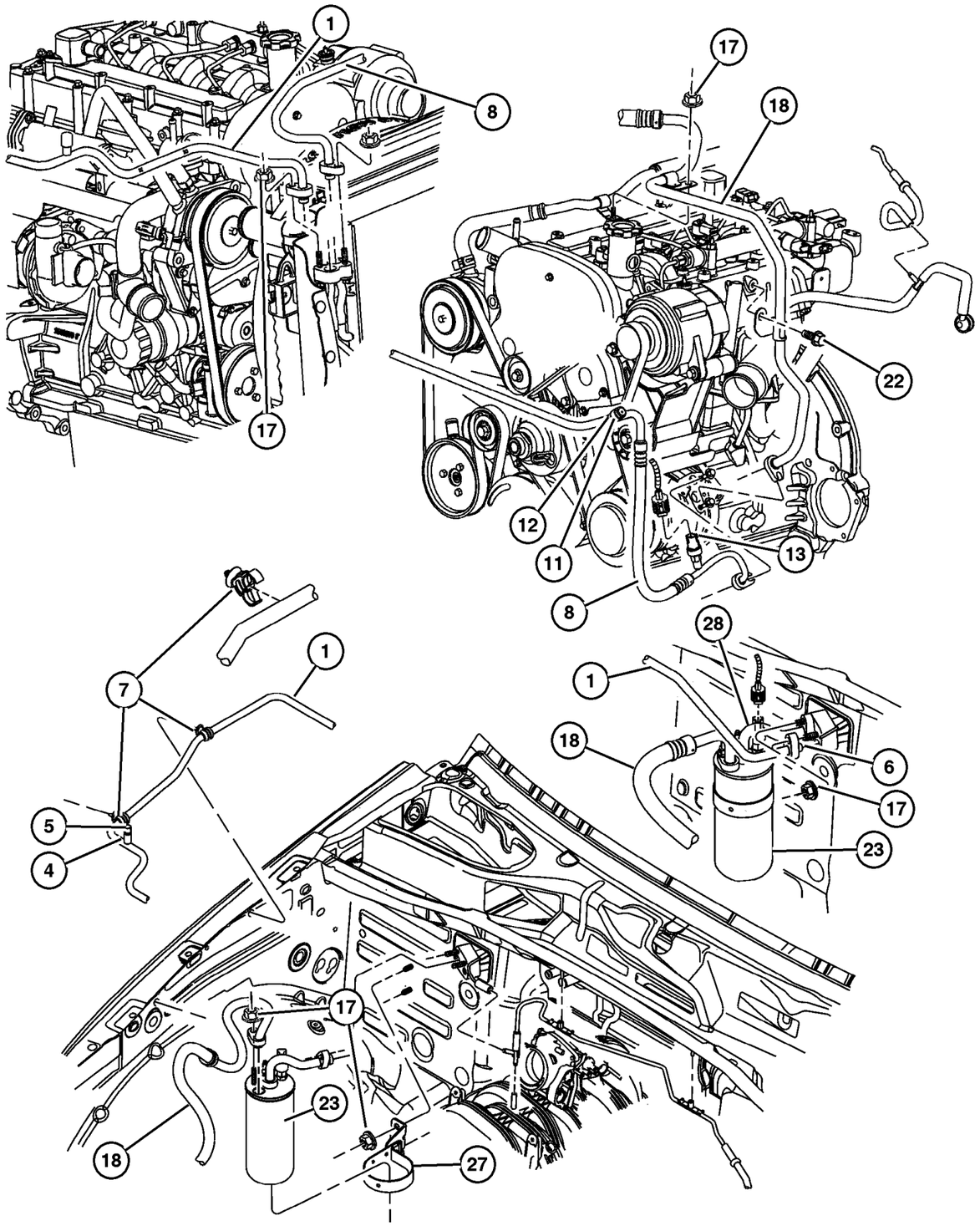

ITEM	PART NUMBER	QTY	LINE	SERIES	BODY	ENGINE	TRANS	TRIM	DESCRIPTION
-31	5183 716AA-	1	J, T			EN0			O RING KIT, Quick Connect, Suction line to evaporator
-32	5183 560AA-	1				EN0			CONDENSER, Air Conditioning

2006 Liberty (KJ)

SERIES	LINE	BODY	ENGINE	TRANSMISSION
H =HIGHLINE	T =JEEP - 2WD	74 =SPORT UTILITY 4-DR	EKG=3.7L V6 Eng.	DG6=4-Spd. Auto. 42RLE Trans.
M =MEDIUM	J =JEEP - 4WD		ENR=2.8L 4 Cyl Turbo Diesel Eng.	DGV=4-Spd. Auto. VLP Trans.
P =PREMIUM	U =JEEP - 4WD (RHD)		ENJ=2.5L 4 Cyl 16V Turbo Diesel Eng.	DGQ=5-Spd Auto. 5-45RFE Trans.
			ED1=2.4L 4 Cyl DOHC 16v SMPI Eng.	DEH=6-Speed Man. NSG370 Trans.
				DDD=5-Speed HD Man. Trans.
				DDK=5-Speed HD Man. Trans.

Plumbing, Air Conditioning 2.8L Diesel Engine, RHD
Figure 024-295

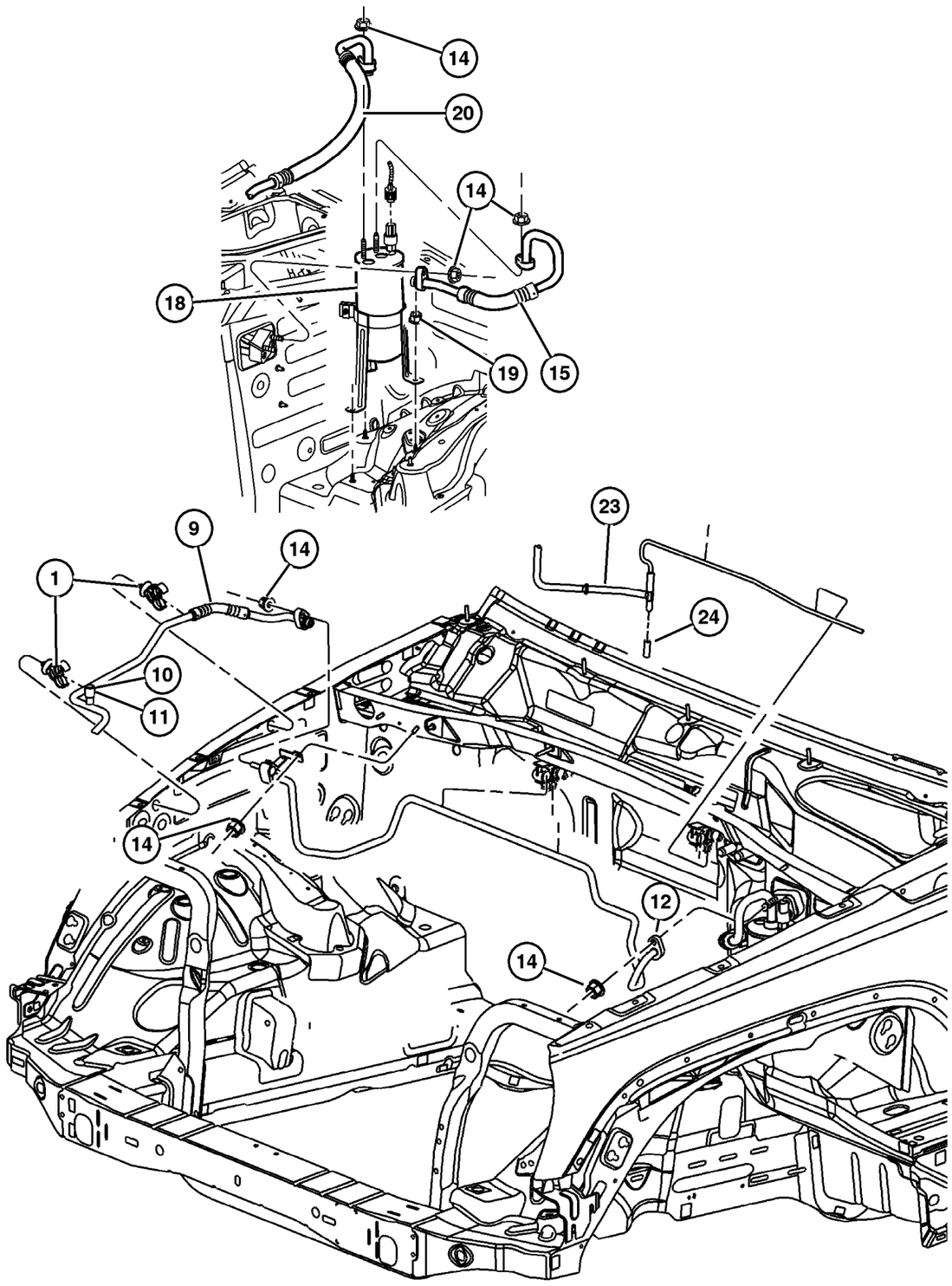

ITEM	PART NUMBER	QTY	LINE	SERIES	BODY	ENGINE	TRANS	TRIM	DESCRIPTION
1	5602 1384	2							CLIP, Liquid Line Attaching
-2	55037 818AC-	1				EN0			LINE, A/C Discharge, Compressor to condenser
-3	4723 029	1				EN0			VALVE, Check
-4	5264 642	1				EN0			CAP, A/C Check Valve
-5	5174 039AB-	1				EN0			VALVE, A/C pressure Transducer
-6	5183 358AA-	1				EN0			O RING, Valve
-7	5139 487AA-	2	U			EN0			O RING, A/C Line, Compressor and Condenser end
-8	5174 115AA-	2	U			EN0			SEAL, Compressor and Condenser end
9	55037 835AC	1	U			EN0			LINE, A/C Liquid
10	4882 335	1	U			EN0			CAP, A/C Check Valve
11	5101 791AA	1	U			EN0			VALVE, Charging
12	5139 487AA	2	U			EN0			O RING, A/C Line
-13	5174 115AA-	2	U			EN0			SEAL
14	6506 152AA	3				EN0			NUT AND CONED WASHER, Hex, M8x1.25
15	55037 595AD	1	U						LINE, A/C Suction
-16	5072 140AA-	1	J, T			EN0			SEAL, A/C Line
-17	5139 486AA-	1	J, T			EN0			O RING, A/C Line
18	55037 471AD	1	U						ACCUMULATOR, Air Conditioning, Includes switch and bracket
19	6101 447	1	U						NUT AND WASHER, M6x1.00
20	55037 806AC	1	U			EN0			LINE, A/C Suction
-21	5072 140AA-	1	J, T			EN0			SEAL, A/C Line
-22	5139 486AA-	1	J, T			EN0			O RING, A/C Line
23	55038 433AE	1	U						HOSE AND VALVE, Vacuum
24	3580 172	1							CAP, Vacuum
-25	5183 560AA-	1				EN0			CONDENSER, Air Conditioning

2006 Liberty (KJ)

SERIES	LINE	BODY	ENGINE	TRANSMISSION
H =HIGHLINE	T =JEEP - 2WD	74 =SPORT UTILITY 4-DR	EKG=3.7L V6 Eng.	DG6=4-Spd. Auto. 42RLE Trans.
M =MEDIUM	J =JEEP - 4WD		ENR=2.8L 4 Cyl Turbo Diesel Eng.	DGV=4-Spd. Auto. VLP Trans.
P =PREMIUM	U =JEEP - 4WD (RHD)		ENJ=2.5L 4 Cyl 16V Turbo Diesel Eng.	DGQ=5-Spd Auto. 5-45RFE Trans.
			ED1=2.4L 4 Cyl DOHC 16v SMPI Eng.	DEH=6-Speed Man. NSG370 Trans.
				DDD=5-Speed HD Man. Trans.
				DDK=5-Speed HD Man. Trans.

AR = Use as required - = Non illustrated part # = New this model year

Control, Heater and Air Conditioning
Figure 024-310

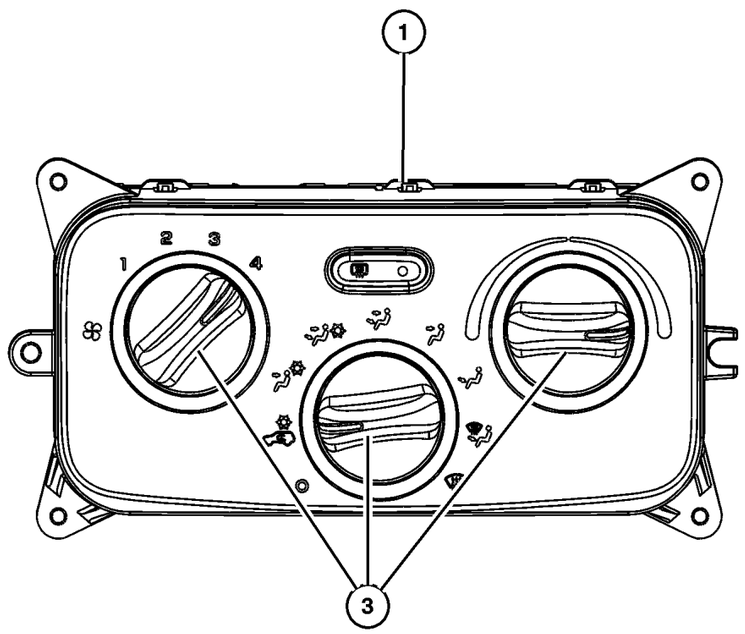

ITEM	PART NUMBER	QTY	LINE	SERIES	BODY	ENGINE	TRANS	TRIM	DESCRIPTION
1	55037 533AG	1							CONTROL, A/C And Heater, with Air Conditioning, [After 12-5-04]
-2	55037 531AD-	1							CONTROL, Heater, without Air Conditioning
3	5069 169AA	1							KNOB, A/C And Heater Control - Rotary
-4	5069 170AA-	1							BULB, Heater and A/C Control

2006 Liberty (KJ)

SERIES	LINE	BODY	ENGINE	TRANSMISSION
H =HIGHLINE	T =JEEP - 2WD	74 =SPORT UTILITY 4-DR	EKG=3.7L V6 Eng.	DG6=4-Spd. Auto. 42RLE Trans.
M =MEDIUM	J =JEEP - 4WD		ENR=2.8L 4 Cyl Turbo Diesel Eng.	DGV=4-Spd. Auto. VLP Trans.
P =PREMIUM	U =JEEP - 4WD (RHD)		ENJ=2.5L 4 Cyl 16V Turbo Diesel Eng.	DGQ=5-Spd Auto. 5-45RFE Trans.
			ED1=2.4L 4 Cyl DOHC 16v SMPI Eng.	DEH=6-Speed Man. NSG370 Trans.
				DDD=5-Speed HD Man. Trans.
				DDK=5-Speed HD Man. Trans.

Compressor, 3.7L Engine
Figure 024-410

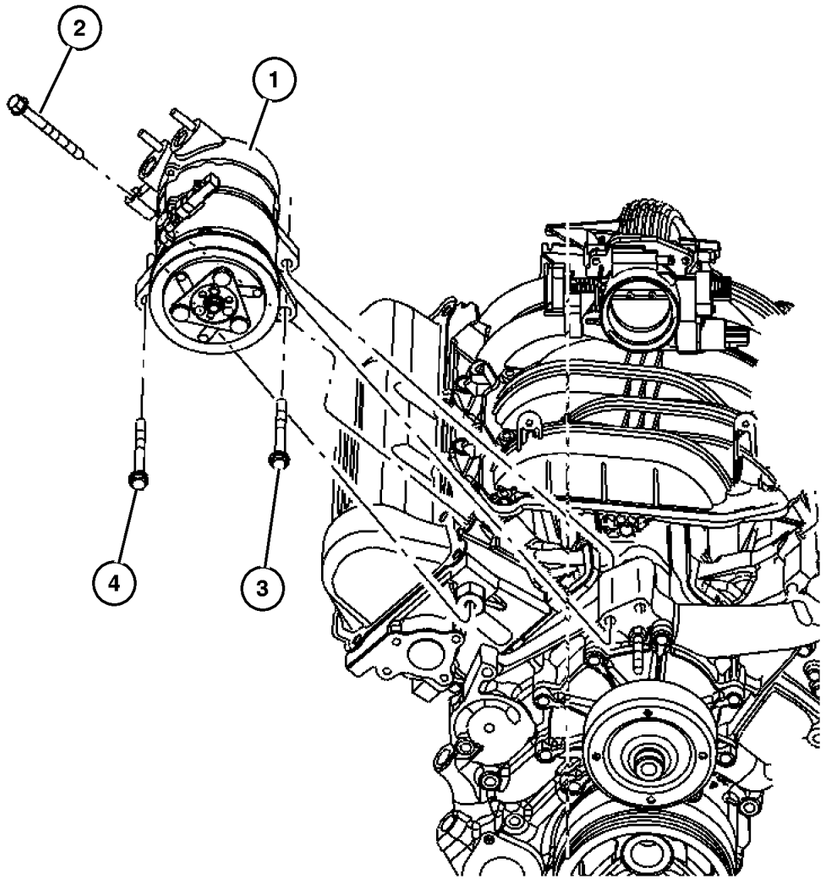

ITEM	PART NUMBER	QTY	LINE	SERIES	BODY	ENGINE	TRANS	TRIM	DESCRIPTION
Note; Sales Codes									
[EK0] = All 3.7L Engines									
[EK0]= All 3.7L, 6 Cylinder Gas Engines									
1	55111 400AA	1				EK0			COMPRESSOR, Air Conditioning
2	6505 482AA	1				EK0			SCREW AND WASHER, Hex Head, M8x1.25x50
3	6504 344	1				EK0			SCREW AND WASHER, Hex Head
4	6505 487AA	1				EK0			SCREW AND WASHER, M10x1.5x45

2006 Liberty (KJ)

SERIES	LINE	BODY	ENGINE	TRANSMISSION
H =HIGHLINE	T =JEEP - 2WD	74 =SPORT UTILITY 4-DR	EKG=3.7L V6 Eng.	DG6=4-Spd. Auto. 42RLE Trans.
M =MEDIUM	J =JEEP - 4WD		ENR=2.8L 4 Cyl Turbo Diesel Eng.	DGV=4-Spd. Auto. VLP Trans.
P =PREMIUM	U =JEEP - 4WD (RHD)		ENJ=2.5L 4 Cyl 16V Turbo Diesel Eng.	DGQ=5-Spd Auto. 5-45RFE Trans.
			ED1=2.4L 4 Cyl DOHC 16v SMPI Eng.	DEH=6-Speed Man. NSG370 Trans.
				DDD=5-Speed HD Man. Trans.
				DDK=5-Speed HD Man. Trans.

Compressor, 2.8L Diesel Engine
Figure 024-430

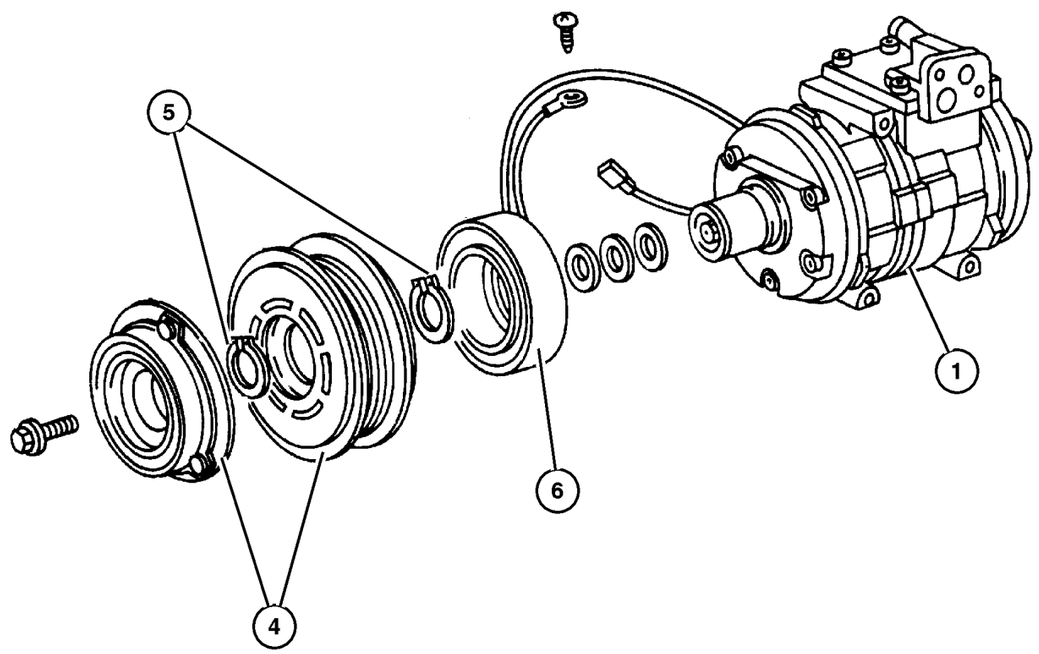

ITEM	PART NUMBER	QTY	LINE	SERIES	BODY	ENGINE	TRANS	TRIM	DESCRIPTION
1	55037 467AC	1				EN0			COMPRESSOR, Air Conditioning, With Clutch
-2	6508 373AA-	2				EN0			BOLT, Hex Flange Head, M6x1.00x22.00, Line to Compressor
-3	5066 228AA-	1				EN0			CLUTCH OVERHAUL KIT, A/C Compressor
4	5072 864AA	1				EN0			PULLEY, A/C Compressor
5	5264 454	1				EN0			SNAP RING KIT, A/C Clutch
6	5003 681AA	1				EN0			COIL, Air Conditioning Clutch

2006 Liberty (KJ)

SERIES	LINE	BODY	ENGINE	TRANSMISSION
H =HIGHLINE	T =JEEP - 2WD	74 =SPORT UTILITY 4-DR	EKG=3.7L V6 Eng.	DG6=4-Spd. Auto. 42RLE Trans.
M =MEDIUM	J =JEEP - 4WD		ENR=2.8L 4 Cyl Turbo Diesel Eng.	DGV=4-Spd. Auto. VLP Trans.
P =PREMIUM	U =JEEP - 4WD (RHD)		ENJ=2.5L 4 Cyl 16V Turbo Diesel Eng.	DGQ=5-Spd Auto. 5-45RFE Trans.
			ED1=2.4L 4 Cyl DOHC 16v SMPI Eng.	DEH=6-Speed Man. NSG370 Trans.
				DDD=5-Speed HD Man. Trans.
				DDK=5-Speed HD Man. Trans.

Compressor Mounting, 3.7L Engine
Figure 024-510

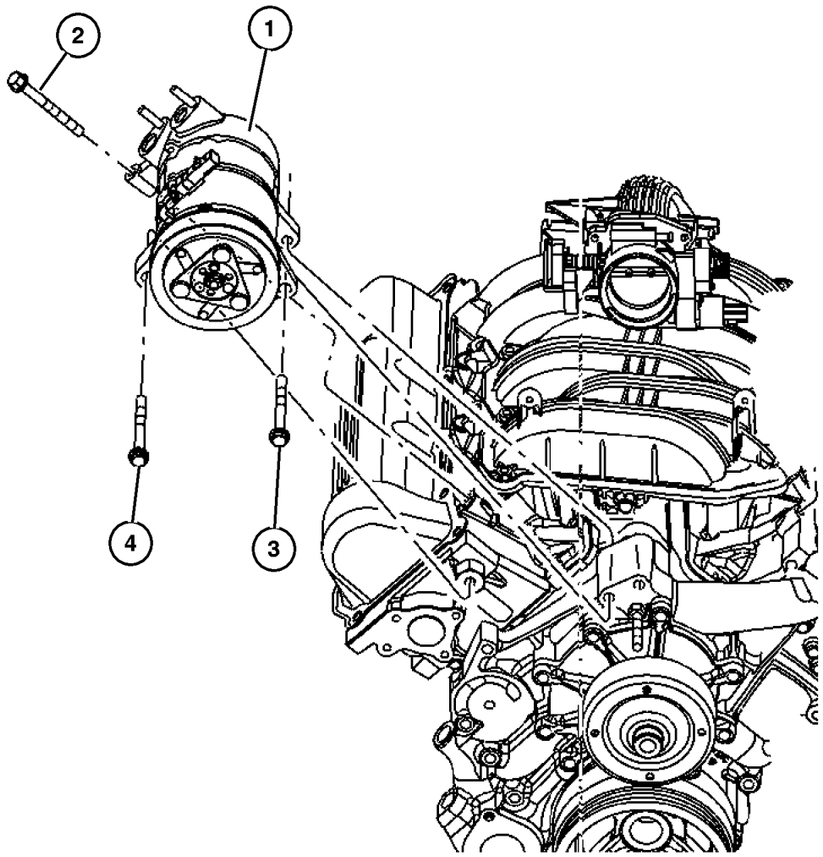

ITEM	PART NUMBER	QTY	LINE	SERIES	BODY	ENGINE	TRANS	TRIM	DESCRIPTION
Note; Sales Codes									
[EK0]= All 3.7L, 6 Cylinder Gas Engines									
1	55111 400AA	1				EK0			COMPRESSOR, Air Conditioning
2	6505 482AA	1				EK0			SCREW AND WASHER, Hex Head, M8x1.25x50
3	6504 344	1				EK0			SCREW AND WASHER, Hex Head
4	6505 487AA	1				EK0			SCREW AND WASHER, M10x1.5x45

2006 Liberty (KJ)

SERIES	LINE	BODY	ENGINE	TRANSMISSION
H =HIGHLINE	T =JEEP - 2WD	74 =SPORT UTILITY 4-DR	EKG=3.7L V6 Eng.	DG6=4-Spd. Auto. 42RLE Trans.
M =MEDIUM	J =JEEP - 4WD		ENR=2.8L 4 Cyl Turbo Diesel Eng.	DGV=4-Spd. Auto. VLP Trans.
P =PREMIUM	U =JEEP - 4WD (RHD)		ENJ=2.5L 4 Cyl 16V Turbo Diesel Eng.	DGQ=5-Spd Auto. 5-45RFE Trans.
			ED1=2.4L 4 Cyl DOHC 16v SMPI Eng.	DEH=6-Speed Man. NSG370 Trans.
				DDD=5-Speed HD Man. Trans.
				DDK=5-Speed HD Man. Trans.

Compressor Mounting, 2.8L Diesel Engine
Figure 024-530

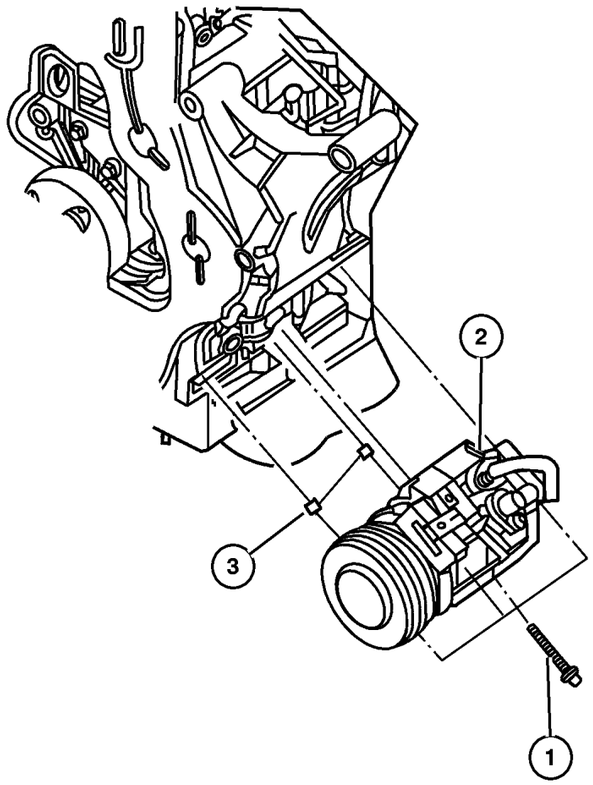

ITEM	PART NUMBER	QTY	LINE	SERIES	BODY	ENGINE	TRANS	TRIM	DESCRIPTION
1	4897 253AB	4				EN0			BOLT, Hex Flange Head, M10x35
2									COMPRESSOR, Air Conditioning
	5093 940AA	1				EN0			Without Clutch
	55037 467AC	1				EN0			With Clutch
3	5066 930AA	1				EN0			PIN

2006 Liberty (KJ)

SERIES	LINE	BODY	ENGINE	TRANSMISSION
H =HIGHLINE	T =JEEP - 2WD	74 =SPORT UTILITY 4-DR	EKG=3.7L V6 Eng.	DG6=4-Spd. Auto. 42RLE Trans.
M =MEDIUM	J =JEEP - 4WD		ENR=2.8L 4 Cyl Turbo Diesel Eng.	DGV=4-Spd. Auto. VLP Trans.
P =PREMIUM	U =JEEP - 4WD (RHD)		ENJ=2.5L 4 Cyl 16V Turbo Diesel Eng.	DGQ=5-Spd Auto. 5-45RFE Trans.
			ED1=2.4L 4 Cyl DOHC 16v SMPI Eng.	DEH=6-Speed Man. NSG370 Trans.
				DDD=5-Speed HD Man. Trans.
				DDK=5-Speed HD Man. Trans.

ILLUSTRATION NOT AVAILABLE AT TIME OF PUBLICATION

ITEM	PART NUMBER	QTY	LINE	SERIES	BODY	ENGINE	TRANS	TRIM	DESCRIPTION
NOTE : SALES CODES									
[DBB]= Transmission - All Manual									
[DG0] = Transmission - All Automatic									
1									DUCT, Defroster
	55037 448AB	1	J, T						
	55037 535AB	1	U						
2									DUCT, Rear Floor Heat
	55037 480AB	1							[DG0]
	55037 562AB	1							[DBB]
3									BAFFLE, Air Inlet
	55037 522AA	1	J, T						
	55037 523AA	1	U						
4									NUT, (NOT SERVICED) (Not Serviced)

2006 Liberty (KJ)

SERIES	LINE	BODY	ENGINE	TRANSMISSION
H =HIGHLINE	T =JEEP - 2WD	74 =SPORT UTILITY 4-DR	EKG=3.7L V6 Eng.	DG6=4-Spd. Auto. 42RLE Trans.
M =MEDIUM	J =JEEP - 4WD		ENR=2.8L 4 Cyl Turbo Diesel Eng.	DGV=4-Spd. Auto. VLP Trans.
P =PREMIUM	U =JEEP - 4WD (RHD)		ENJ=2.5L 4 Cyl 16V Turbo Diesel Eng.	DGQ=5-Spd Auto. 5-45RFE Trans.
			ED1=2.4L 4 Cyl DOHC 16v SMPI Eng.	DEH=6-Speed Man. NSG370 Trans.
				DDD=5-Speed HD Man. Trans.
				DDK=5-Speed HD Man. Trans.

Group – 025
Emission Systems

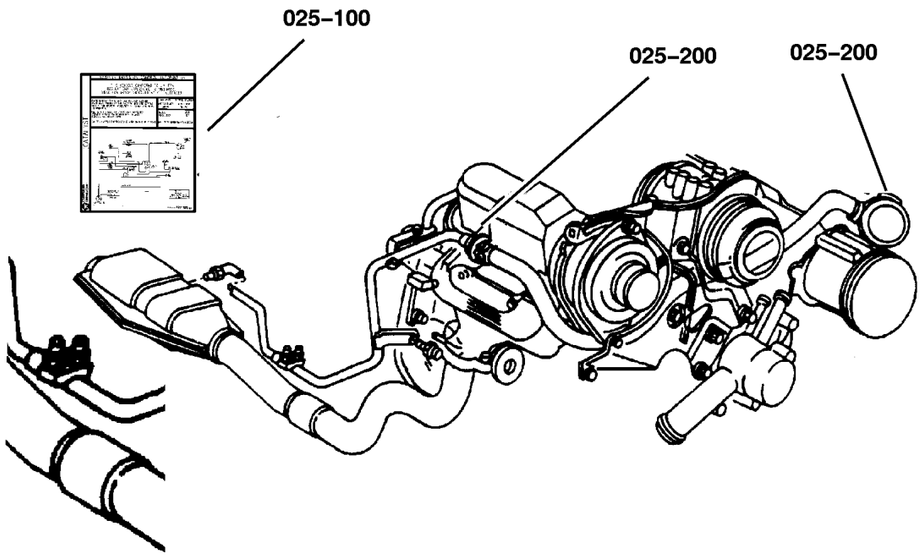

025–200 EGR System	025–300 Vacuum Canister	025–400 Emission Harness	
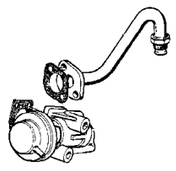		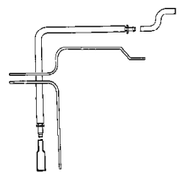	

GROUP 25 - Emission Systems

Illustration Title — Group-Fig. No.

EGR System
EGR System 2.8L [EN0] . . . . . Fig. 025-210

Vacuum Canister
Vapor Canister . . . . . Fig. 025-310

Emission Harness
Emission Vacuum Harness 3.7L [EK0] . . . . . Fig. 025-420
Leak Detection Pump 3.7L [EK0] . . . . . Fig. 025-430

EGR System 2.8L [EN0]
Figure 025-210

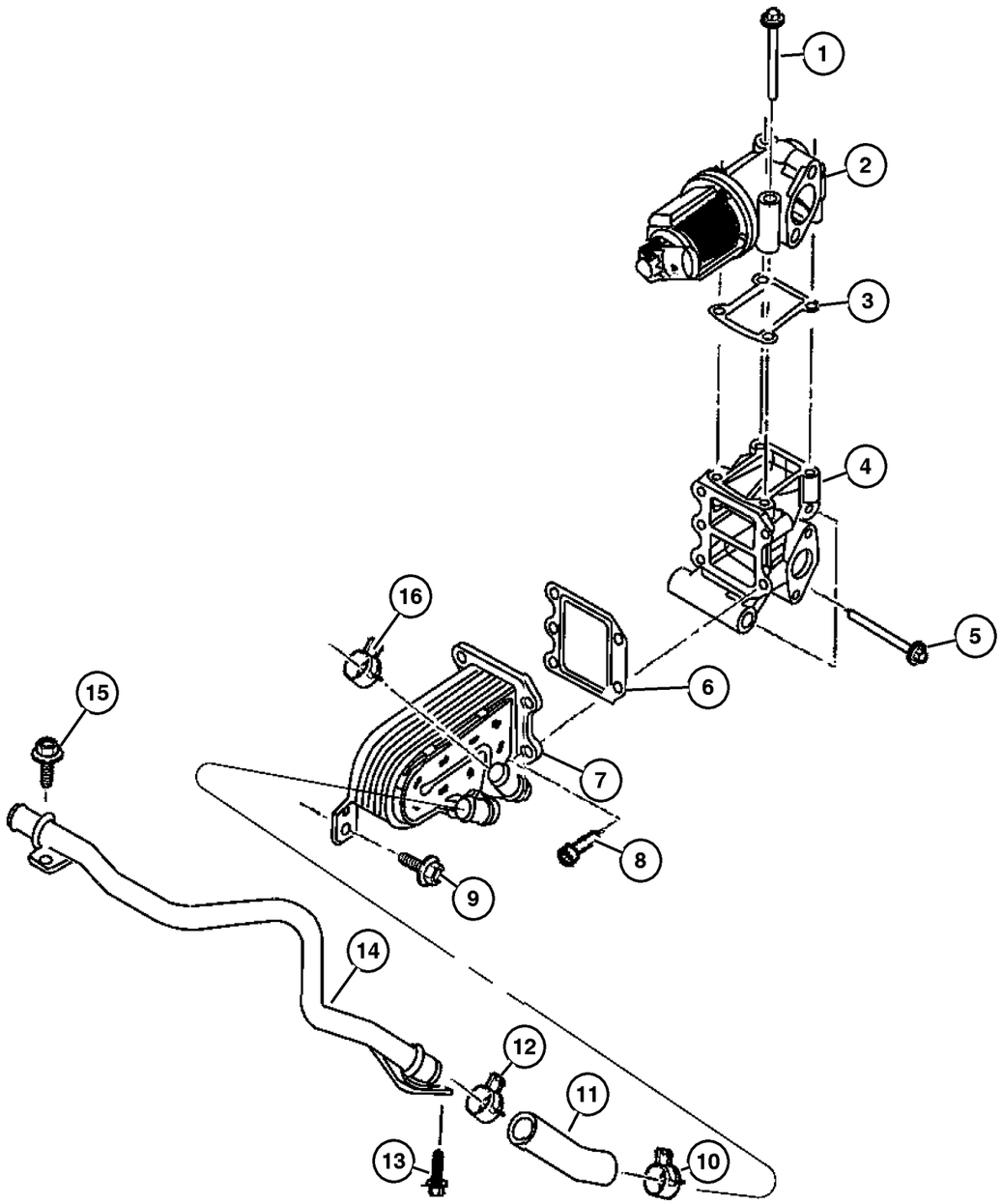

ITEM	PART NUMBER	QTY	LINE	SERIES	BODY	ENGINE	TRANS	TRIM	DESCRIPTION
Note; Sales Codes									
[DBB]= All Manual Transmissions									
[EN0]= All 4/5 Cylinder Turbo Diesels									
1									BOLT
	5142 804AA	4				EN0	DG0		
		4				EN0	DBB		
2									VALVE, EGR
	5159 971AA	1				EN0	DG0		
		1				EN0	DBB		
3									GASKET, EGR Valve
	5142 815AA	1				EN0	DG0		
		1				EN0	DBB		
4									EGR KIT, Valve And Cooler
	5142 812AB	1				EN0	DG0		
		1				EN0	DBB		
5									BOLT
	5003 945AA	3				EN0	DG0		
		3				EN0	DBB		
6									GASKET, EGR Cooler
	5142 617AA	1				EN0	DG0		
		1				EN0	DBB		
7									COOLER, EGR
	5170 789AA	1				EN0	DG0		
		1				EN0	DBB		
8									SCREW
	4720 658	1				EN0	DG0		
		1				EN0	DBB		
9									SCREW
	5003 557AA	2				EN0	DG0		
		2				EN0	DBB		
10									CLAMP, Heater Hose
	4883 924AA	4				EN0	DBB		
		4				EN0	DG0		
11									PIPE
	5159 961AA	1				EN0	DG0		
		1				EN0	DBB		
12									CLAMP, Heater Hose
	4883 924AA	4				EN0	DBB		
		4				EN0	DG0		
13									BOLT
	4864 748AB	1				EN0	DG0		
		1				EN0	DBB		
14									PIPE

2006 Liberty (KJ)

SERIES	LINE	BODY	ENGINE	TRANSMISSION
H =HIGHLINE	T =JEEP - 2WD	74 =SPORT UTILITY 4-DR	EKG=3.7L V6 Eng.	DG6=4-Spd. Auto. 42RLE Trans.
M =MEDIUM	J =JEEP - 4WD		ENR=2.8L 4 Cyl Turbo Diesel Eng.	DGV=4-Spd. Auto. VLP Trans.
P =PREMIUM	U =JEEP - 4WD (RHD)		ENJ=2.5L 4 Cyl 16V Turbo Diesel Eng.	DGQ=5-Spd Auto. 5-45RFE Trans.
			ED1=2.4L 4 Cyl DOHC 16v SMPI Eng.	DEH=6-Speed Man. NSG370 Trans.
				DDD=5-Speed HD Man. Trans.
				DDK=5-Speed HD Man. Trans.

AR = Use as required - = Non illustrated part # = New this model year

EGR System 2.8L [EN0]
Figure 025-210

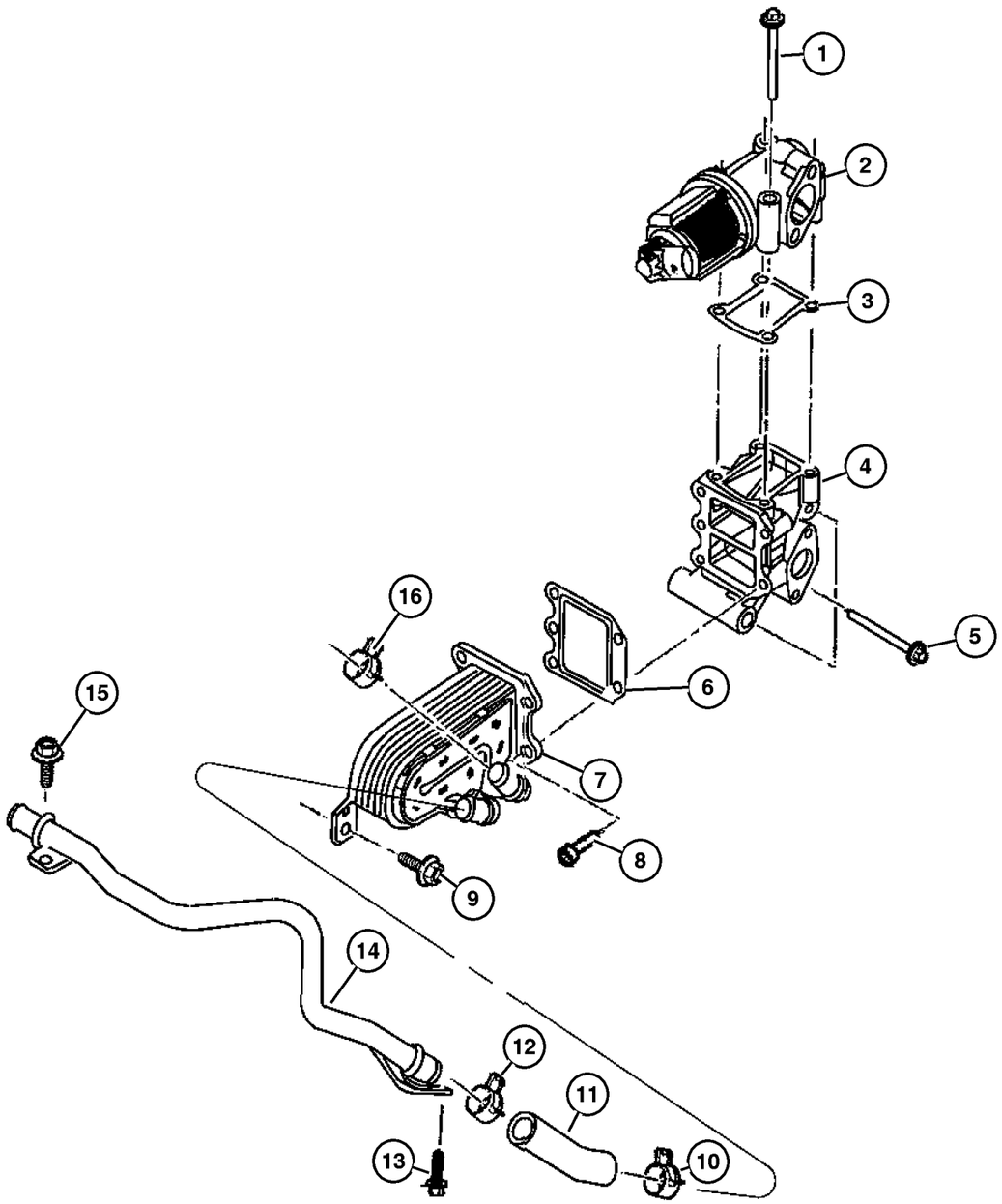

ITEM	PART NUMBER	QTY	LINE	SERIES	BODY	ENGINE	TRANS	TRIM	DESCRIPTION
	5159 958AA	1				EN0	DG0		
		1				EN0	DBB		
15									BOLT
	4864 748AB	1				EN0	DG0		
		1				EN0	DBB		
16									CLAMP, Heater Hose
	4883 924AA	4				EN0	DBB		
		4				EN0	DG0		

2006 Liberty (KJ)

SERIES	LINE	BODY	ENGINE	TRANSMISSION
H =HIGHLINE	T =JEEP - 2WD	74 =SPORT UTILITY 4-DR	EKG=3.7L V6 Eng.	DG6=4-Spd. Auto. 42RLE Trans.
M =MEDIUM	J =JEEP - 4WD		ENR=2.8L 4 Cyl Turbo Diesel Eng.	DGV=4-Spd. Auto. VLP Trans.
P =PREMIUM	U =JEEP - 4WD (RHD)		ENJ=2.5L 4 Cyl 16V Turbo Diesel Eng.	DGQ=5-Spd Auto. 5-45RFE Trans.
			ED1=2.4L 4 Cyl DOHC 16v SMPI Eng.	DEH=6-Speed Man. NSG370 Trans.
				DDD=5-Speed HD Man. Trans.
				DDK=5-Speed HD Man. Trans.

AR = Use as required - = Non illustrated part # = New this model year

Vapor Canister
Figure 025-310

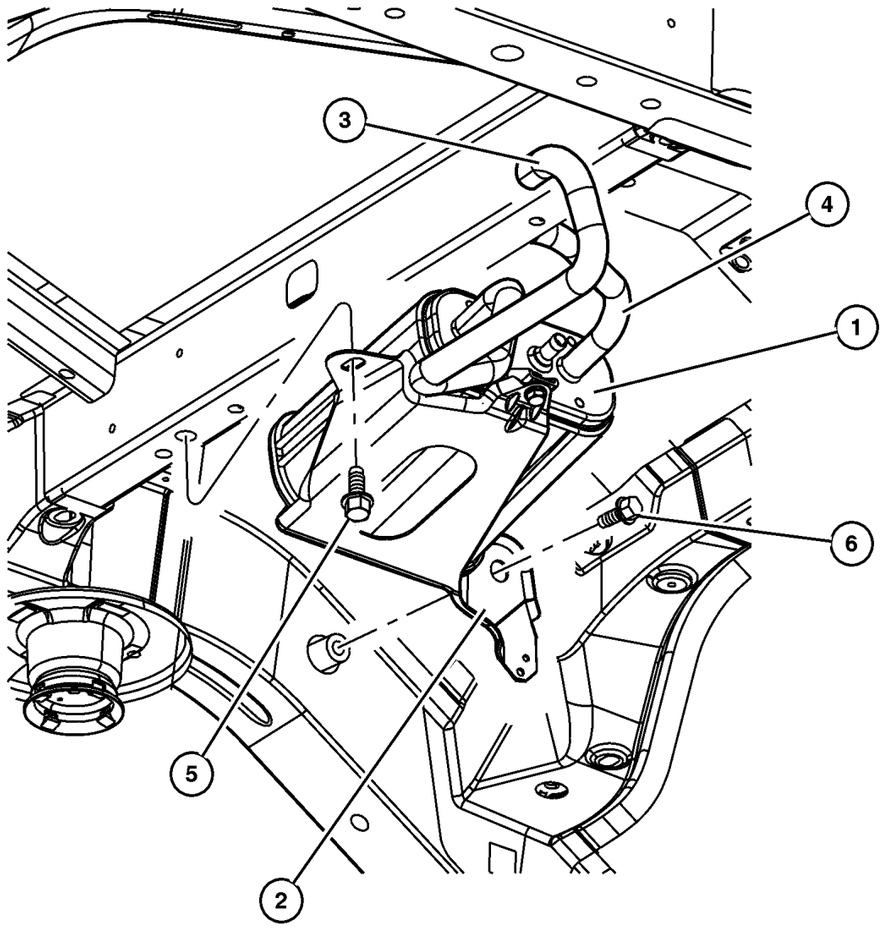

ITEM	PART NUMBER	QTY	LINE	SERIES	BODY	ENGINE	TRANS	TRIM	DESCRIPTION
1	4891 562AA	1				EK0			CANISTER, Vapor
2	52128 677AC	1				EK0			BRACKET, Vapor Canister
3	52128 661AA	1				EK0			HOSE, Canister to NVLD
4	52128 679AB	1				EK0			HOSE, Canister to Vent Valve
5	6101 452	1				EK0			SCREW AND WASHER, Hex Head, M8x1.25x20
6	6508 267AA	2				EK0			BOLT
-7	6101 467	1				EK0			NUT, Hex Flange, M8x1.25

2006 Liberty (KJ)

SERIES
- H =HIGHLINE
- M =MEDIUM
- P =PREMIUM

LINE
- T =JEEP - 2WD
- J =JEEP - 4WD
- U =JEEP - 4WD (RHD)

BODY
- 74 =SPORT UTILITY 4-DR

ENGINE
- EKG=3.7L V6 Eng.
- ENR=2.8L 4 Cyl Turbo Diesel Eng.
- ENJ=2.5L 4 Cyl 16V Turbo Diesel Eng.
- ED1=2.4L 4 Cyl DOHC 16v SMPI Eng.

TRANSMISSION
- DG6=4-Spd. Auto. 42RLE Trans.
- DGV=4-Spd. Auto. VLP Trans.
- DGQ=5-Spd Auto. 5-45RFE Trans.
- DEH=6-Speed Man. NSG370 Trans.
- DDD=5-Speed HD Man. Trans.
- DDK=5-Speed HD Man. Trans.

AR = Use as required - = Non illustrated part # = New this model year

September 20, 2005

« RETURN TO GROUP INDEX

Emission Vacuum Harness 3.7L [EK0]
Figure 025-420

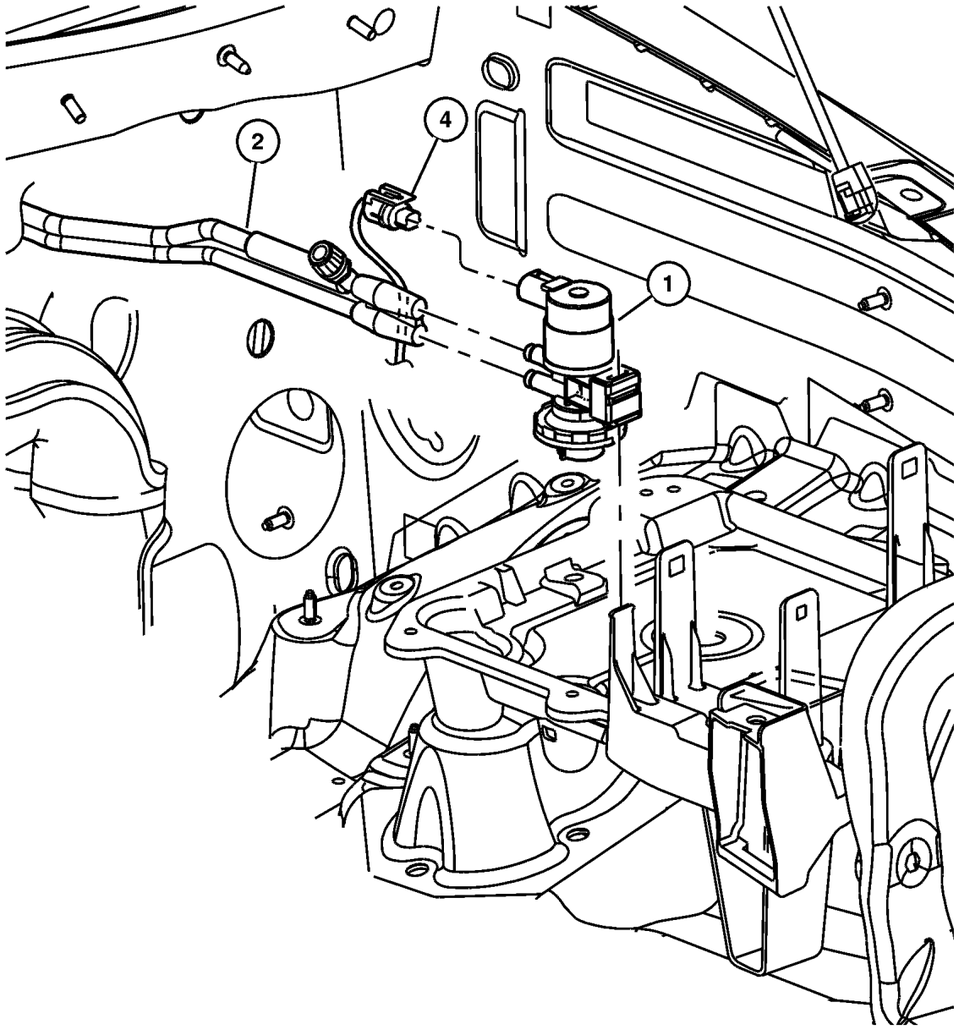

ITEM	PART NUMBER	QTY	LINE	SERIES	BODY	ENGINE	TRANS	TRIM	DESCRIPTION
Note; Sales Codes									
[EK0]= All 3.7L 6 Cylinder Gas Engines									
1	52090 419AA	1				ED0, EK0			SOLENOID, Proportional Purge
2									HARNESS, Vapor Purge
	52128 696AC	1				EK0			
		1				ED0			
-3									TUBE, Vacuum, From Vapor Harness To Throttle Body
	52128 663AB-	1				EK0			
	52128 666AB-	1				ED0			
4									CONNECTOR, See Headlamp To Dash Wiring , Group 8, (NOT SERVICED) (Not Serviced)
-5	3580 172	1							CAP, Vacuum

2006 Liberty (KJ)

SERIES	LINE	BODY	ENGINE	TRANSMISSION
H =HIGHLINE	T =JEEP - 2WD	74 =SPORT UTILITY 4-DR	EKG=3.7L V6 Eng.	DG6=4-Spd. Auto. 42RLE Trans.
M =MEDIUM	J =JEEP - 4WD		ENR=2.8L 4 Cyl Turbo Diesel Eng.	DGV=4-Spd. Auto. VLP Trans.
P =PREMIUM	U =JEEP - 4WD (RHD)		ENJ=2.5L 4 Cyl 16V Turbo Diesel Eng.	DGQ=5-Spd Auto. 5-45RFE Trans.
			ED1=2.4L 4 Cyl DOHC 16v SMPI Eng.	DEH=6-Speed Man. NSG370 Trans.
				DDD=5-Speed HD Man. Trans.
				DDK=5-Speed HD Man. Trans.

Leak Detection Pump 3.7L [EK0]
Figure 025-430

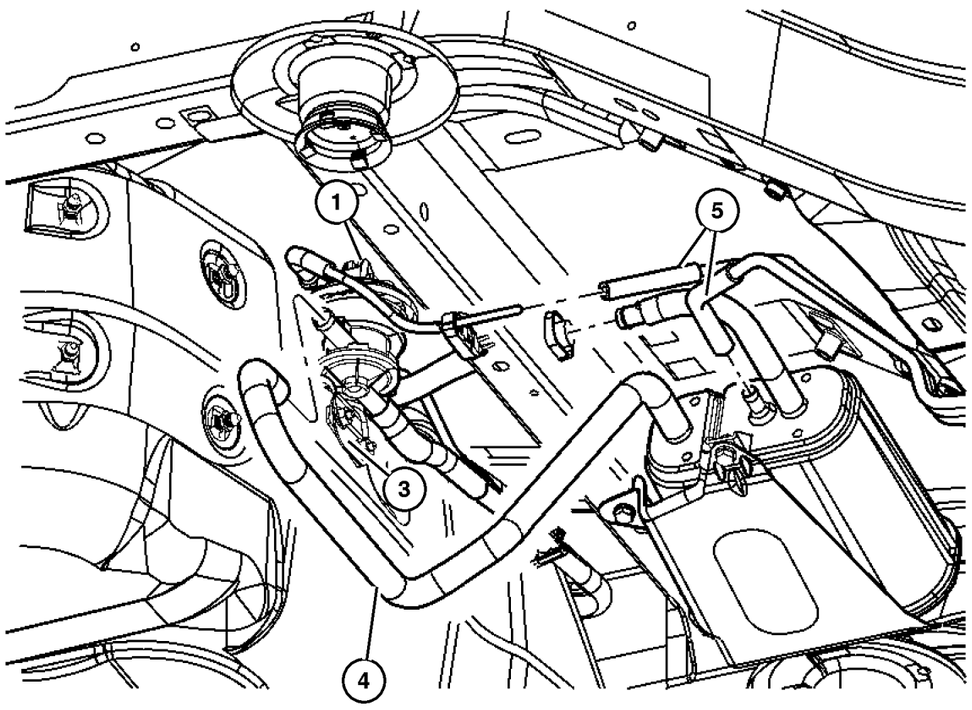

ITEM	PART NUMBER	QTY	LINE	SERIES	BODY	ENGINE	TRANS	TRIM	DESCRIPTION
Note; Sales Code									
[EK0]= All 3.7L 6 Cylinder Gas Engines									
1	4891 525AB	1				EK0			DETECTOR, Natural Vacuum Leak Detection
-2	5085 164AA-	1				EK0			FILTER, Leak Detection Pump
3	52128 629AC	1				EK0			BRACKET, Natural Vacuum Leak Detection
4	52128 661AA	1				EK0			HOSE, Canister to NVLD
5									BUNDLE, Fuel Line, Service in group 14, (NOT SERVICED) (Not Serviced)
-6	52128 679AB-	1				EK0			HOSE, Canister to Vent Valve
-7	52128 663AB-	1				EK0			TUBE, Vacuum
-8	52128 631AC-	1				EK0			TUBE, Vapor, FRESH AIR
-9	4891 562AA-	1				EK0			CANISTER, Vapor

2006 Liberty (KJ)

SERIES	LINE	BODY	ENGINE	TRANSMISSION
H =HIGHLINE	T =JEEP - 2WD	74 =SPORT UTILITY 4-DR	EKG=3.7L V6 Eng.	DG6=4-Spd. Auto. 42RLE Trans.
M =MEDIUM	J =JEEP - 4WD		ENR=2.8L 4 Cyl Turbo Diesel Eng.	DGV=4-Spd. Auto. VLP Trans.
P =PREMIUM	U =JEEP - 4WD (RHD)		ENJ=2.5L 4 Cyl 16V Turbo Diesel Eng.	DGQ=5-Spd Auto. 5-45RFE Trans.
			ED1=2.4L 4 Cyl DOHC 16v SMPI Eng.	DEH=6-Speed Man. NSG370 Trans.
				DDD=5-Speed HD Man. Trans.
				DDK=5-Speed HD Man. Trans.

Group – DKJ

Doors and Related Parts

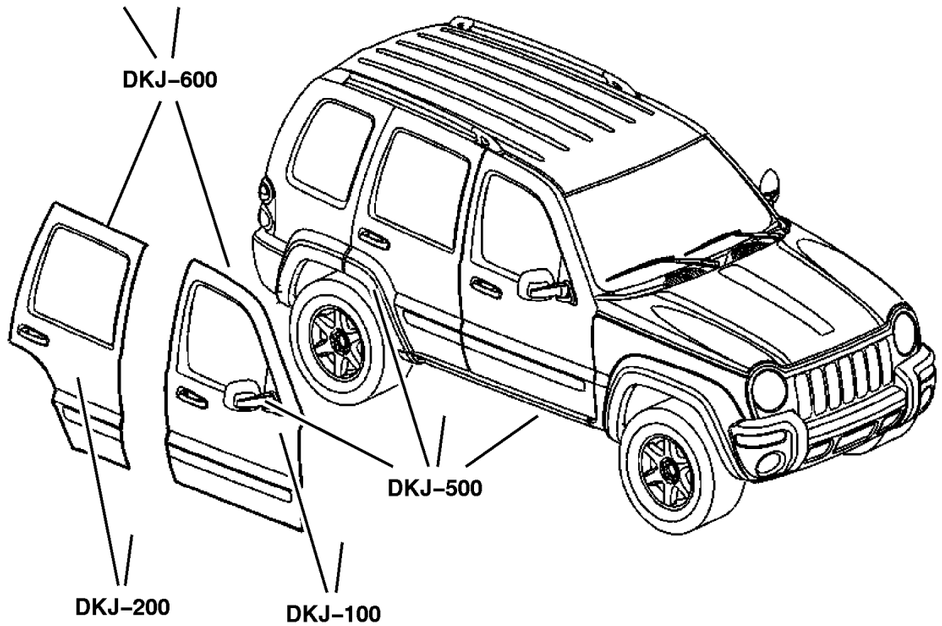

DKJ–100 Front Door	DKJ–200 Rear Door	DKJ–500 Exterior Mirror	DKJ–600 Weatherstrips and Seals
	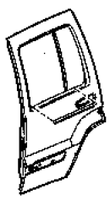	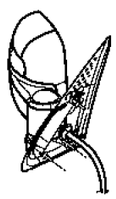	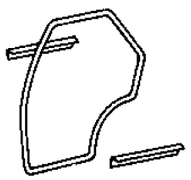

GROUP DKJ - Doors and Related Parts

Illustration Title — Group-Fig. No.

Front Door
- Door, Front, Shell and Hinges . . . . . Fig. DKJ-110
- Door, Front, Glass and Regulator . . . . . Fig. DKJ-120
- Door, Front, Lock and Controls . . . . . Fig. DKJ-130

Rear Door
- Door, Rear, Shell and Hinges . . . . . Fig. DKJ-210
- Door, Rear, Glass and Regulator . . . . . Fig. DKJ-220
- Door, Rear, Lock and Controls . . . . . Fig. DKJ-230

Exterior Mirror
- Mirrors, Exterior . . . . . Fig. DKJ-510

Weatherstrips and Seals
- Door, Front . . . . . Fig. DKJ-610
- Door, Rear . . . . . Fig. DKJ-620

Door, Front, Shell and Hinges
Figure DKJ-110

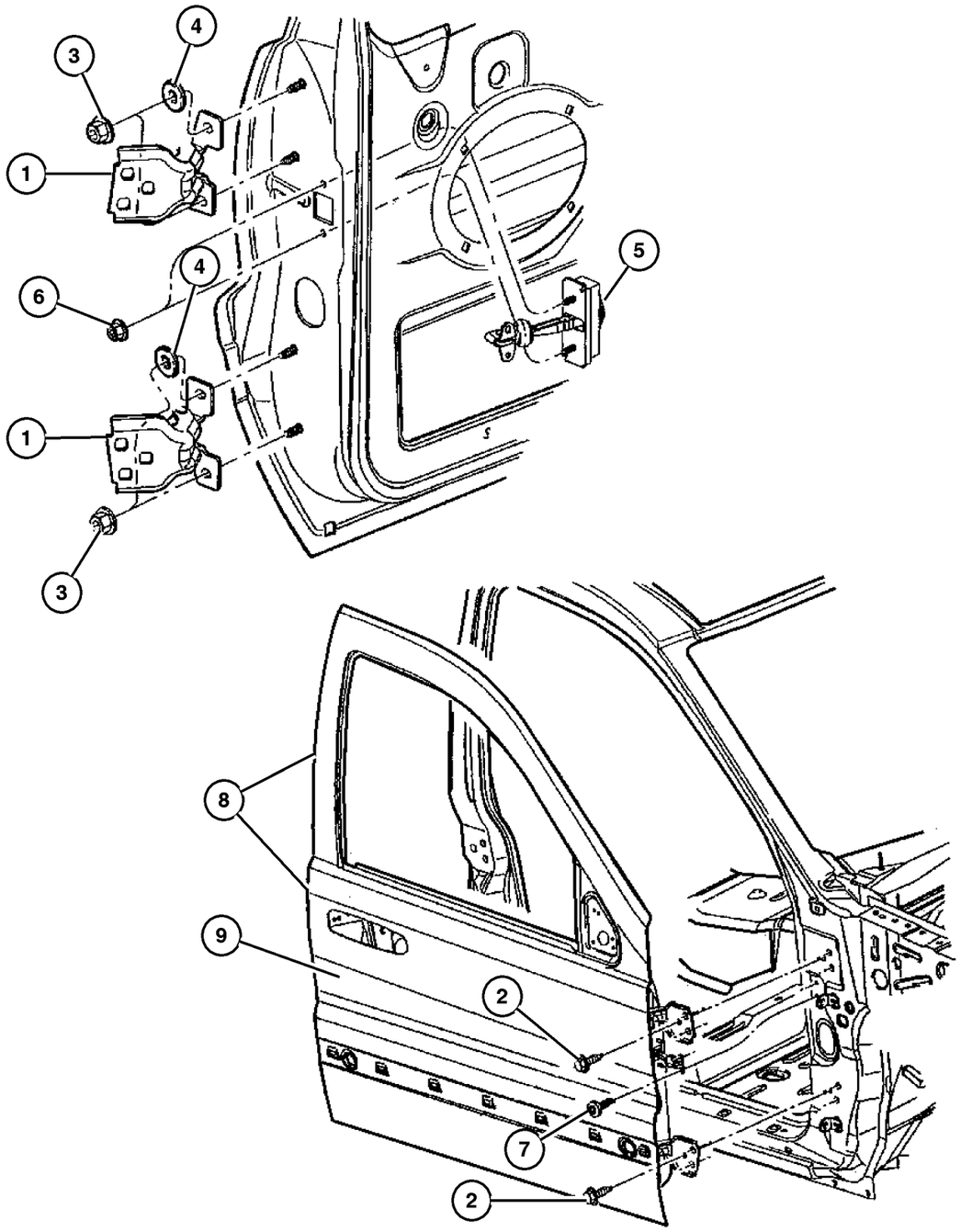

ITEM	PART NUMBER	QTY	LINE	SERIES	BODY	ENGINE	TRANS	TRIM	DESCRIPTION
Note:									
Sale Codes:									
[GXM]= Keyless Entry									
1	55177 026AC	4							HINGE, Door
2	6507 342AA	8							SCREW, M8x1.25x30
3									NUT AND WASHER, Hex, M8x1.25, (NOT SERVICED) (Not Serviced)
4									WASHER, Flat, (NOT SERVICED) (Not Serviced)
5	55177 028AC	2							CHECK, Front Door, Right & Left
6	5096 978AA	2	J, T						NUT, Hex, M6
7									SCREW AND WASHER, Hex Head, M6x1x20, (NOT SERVICED) (Not Serviced)
8									DOOR, Front
	55176 890AH	1							Right
	55176 891AH	1							Left
9									PANEL, Front Door Outer Repair
	55176 882AD	1							Right
	55176 883AD	1							Left
-10									BRACKET, Door Inside
	5072 943AA-	1	J, U						Export, Right
	5072 945AA-	1	J, U						Left
	55360 636AA-	1	J, T						[GXM], Right

2006 Liberty (KJ)

SERIES	LINE	BODY	ENGINE	TRANSMISSION
H =HIGHLINE	T =JEEP - 2WD	74 =SPORT UTILITY 4-DR	EKG=3.7L V6 Eng.	DG6=4-Spd. Auto. 42RLE Trans.
M =MEDIUM	J =JEEP - 4WD		ENR=2.8L 4 Cyl Turbo Diesel Eng.	DGV=4-Spd. Auto. VLP Trans.
P =PREMIUM	U =JEEP - 4WD (RHD)		ENJ=2.5L 4 Cyl 16V Turbo Diesel Eng.	DGQ=5-Spd Auto. 5-45RFE Trans.
			ED1=2.4L 4 Cyl DOHC 16v SMPI Eng.	DEH=6-Speed Man. NSG370 Trans.
				DDD=5-Speed HD Man. Trans.
				DDK=5-Speed HD Man. Trans.

Door, Front, Glass and Regulator
Figure DKJ-120

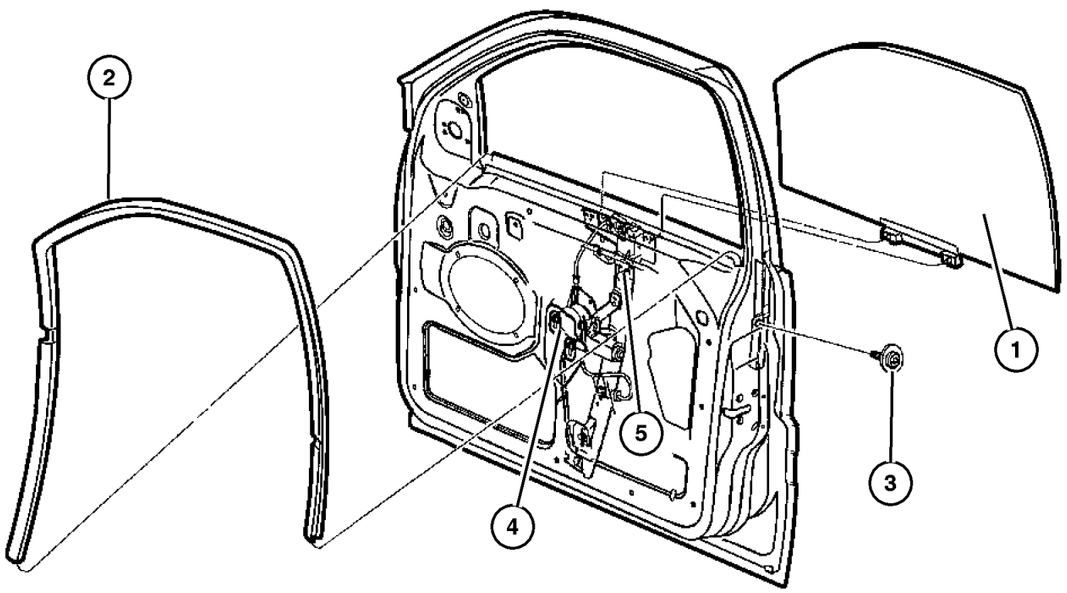

ITEM	PART NUMBER	QTY	LINE	SERIES	BODY	ENGINE	TRANS	TRIM	DESCRIPTION
1									GLASS, Front Door
	55360 374AH	1							Right
	55360 375AH	1							Left
2									WEATHERSTRIP, Glass Channel Run
	55360 958AA	1							Right
	55360 959AA	1							Left
3									SCREW, M6X1.00X15.5, (NOT SERVICED) (Not Serviced)
4									REGULATOR, Front Door Window
	55360 030AL	1							Used up to 5/02/05, Right
	55360 031AL	1							Used up to 5/02/05, Left
	55360 030AM	1							Used After 5/02/05, Right
	55360 031AM	1							Used After 5/02/05, Left
5	6504 029	7							BOLT, Hex Flange Head, M6x1.0x20, Regulator to Door

2006 Liberty (KJ)

SERIES	LINE	BODY	ENGINE	TRANSMISSION
H =HIGHLINE	T =JEEP - 2WD	74 =SPORT UTILITY 4-DR	EKG=3.7L V6 Eng.	DG6=4-Spd. Auto. 42RLE Trans.
M =MEDIUM	J =JEEP - 4WD		ENR=2.8L 4 Cyl Turbo Diesel Eng.	DGV=4-Spd. Auto. VLP Trans.
P =PREMIUM	U =JEEP - 4WD (RHD)		ENJ=2.5L 4 Cyl 16V Turbo Diesel Eng.	DGQ=5-Spd Auto. 5-45RFE Trans.
			ED1=2.4L 4 Cyl DOHC 16v SMPI Eng.	DEH=6-Speed Man. NSG370 Trans.
				DDD=5-Speed HD Man. Trans.
				DDK=5-Speed HD Man. Trans.

Door, Front, Lock and Controls
Figure DKJ-130

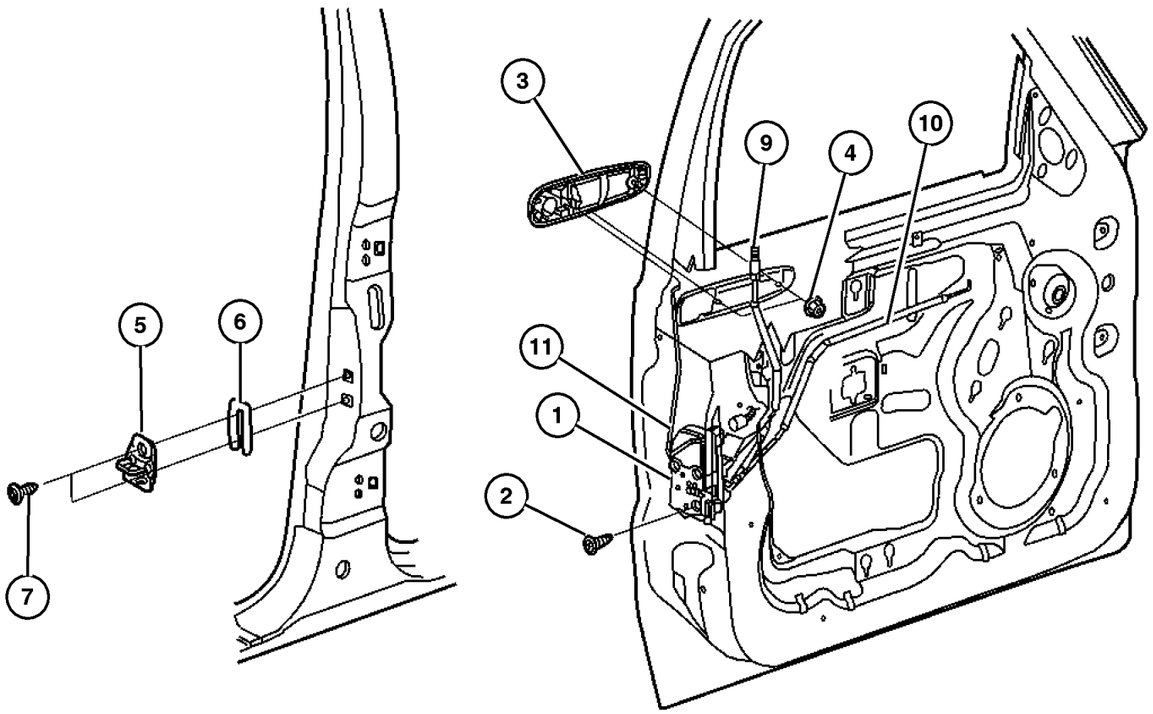

ITEM	PART NUMBER	QTY	LINE	SERIES	BODY	ENGINE	TRANS	TRIM	DESCRIPTION
Note; Sales Codes									
[JPB]= Power Locks									
1									LATCH, Front Door
	55177 042AL	1							Without [GXM], Right
	55360 956AC	1							Left
	55360 611AE	1							With [GXM], Right
2	6033 876	6							SCREW, Tapping, M6.3x1.8x38.1
3									HANDLE, Front Door Exterior
	55360 332AF	1							Without [GXM], Right
	55360 614AB	1							With [GXM], Right
	55360 333AF	1							Left
4	6503 226	2							NUT, Hex Flange, M5x.8
5	4780 607AA	2							STRIKER, Door, Right & Left
6	5507 5483	AR							SPACER, Door Latch Striker
7	6506 749AA	4							SCREW, 6 Lobed
-8	4658 677	2							CLIP, Latch Link
9									ROD, Latch To Knob
	55360 534AC	1							Right
	55360 535AC	1							Left
10	5072 350AA	1							ROD, Inside Handle to Latch
11	5072 352AA	1							LINK, Exterior Door Handle

2006 Liberty (KJ)

SERIES	LINE	BODY	ENGINE	TRANSMISSION
H =HIGHLINE	T =JEEP - 2WD	74 =SPORT UTILITY 4-DR	EKG=3.7L V6 Eng.	DG6=4-Spd. Auto. 42RLE Trans.
M =MEDIUM	J =JEEP - 4WD		ENR=2.8L 4 Cyl Turbo Diesel Eng.	DGV=4-Spd. Auto. VLP Trans.
P =PREMIUM	U =JEEP - 4WD (RHD)		ENJ=2.5L 4 Cyl 16V Turbo Diesel Eng.	DGQ=5-Spd Auto. 5-45RFE Trans.
			ED1=2.4L 4 Cyl DOHC 16v SMPI Eng.	DEH=6-Speed Man. NSG370 Trans.
				DDD=5-Speed HD Man. Trans.
				DDK=5-Speed HD Man. Trans.

AR = Use as required - = Non illustrated part # = New this model year

Door, Rear, Shell and Hinges
Figure DKJ-210

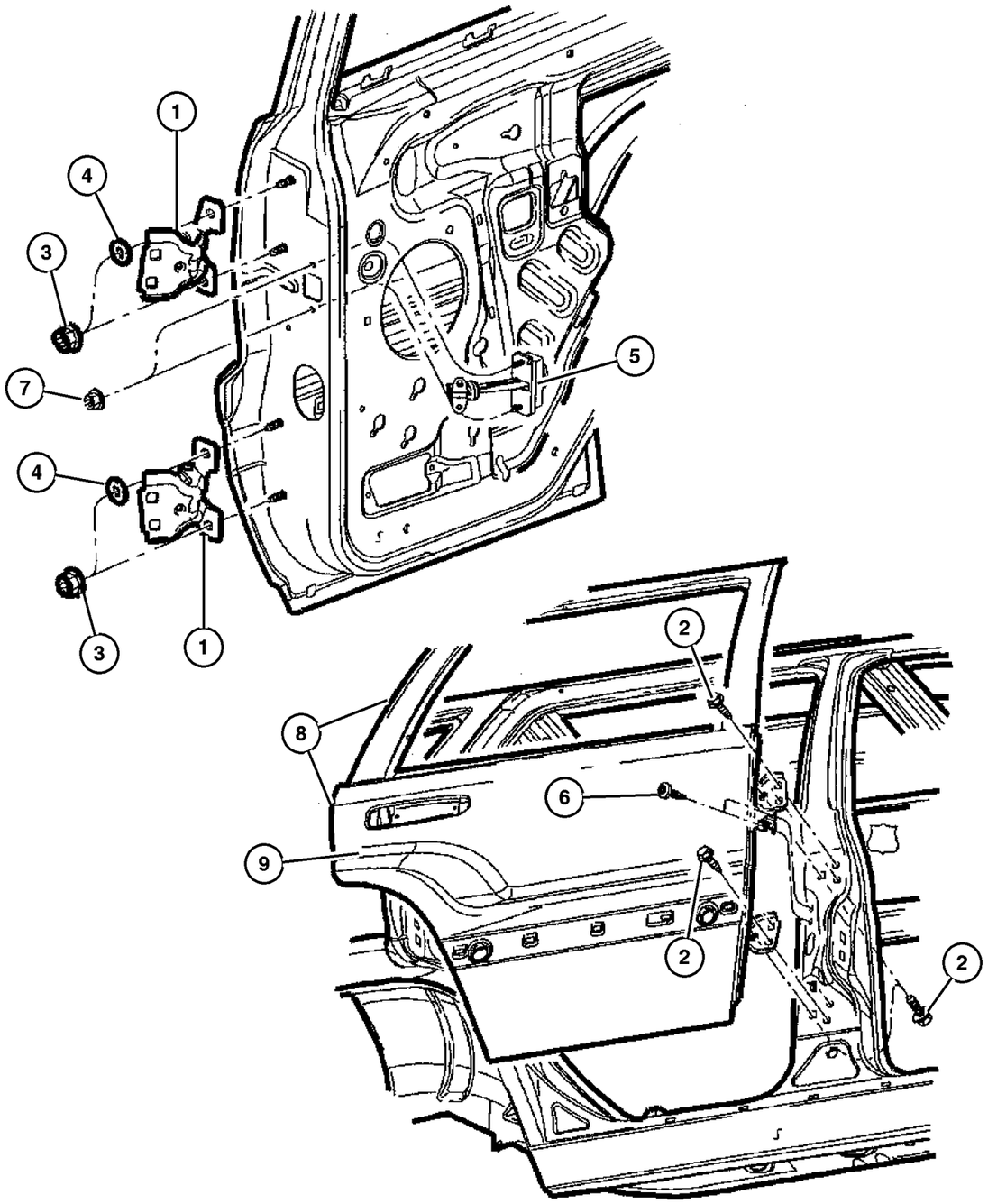

ITEM	PART NUMBER	QTY	LINE	SERIES	BODY	ENGINE	TRANS	TRIM	DESCRIPTION
1	55177 030AE	4							HINGE, Door, Right & Left
2	6507 342AA	8							SCREW, M8x1.25x30
3									NUT AND WASHER, Hex, M8x1.25, (NOT SERVICED) (Not Serviced)
4									WASHER, Flat, (NOT SERVICED) (Not Serviced)
5	55177 036AC	2							CHECK, Rear Door, Right & Left
6									SCREW AND WASHER, Hex Head, M6x1x20, (NOT SERVICED) (Not Serviced)
7	5096 978AA	4							NUT, Hex, M6
8									DOOR, Rear
	55176 906AI	1							Right
	55176 907AI	1							Left
9									PANEL, Rear Door
	55176 908AD	1							Right
	55176 909AD	1							Left

2006 Liberty (KJ)

SERIES	LINE	BODY	ENGINE	TRANSMISSION
H =HIGHLINE	T =JEEP - 2WD	74 =SPORT UTILITY 4-DR	EKG=3.7L V6 Eng.	DG6=4-Spd. Auto. 42RLE Trans.
M =MEDIUM	J =JEEP - 4WD		ENR=2.8L 4 Cyl Turbo Diesel Eng.	DGV=4-Spd. Auto. VLP Trans.
P =PREMIUM	U =JEEP - 4WD (RHD)		ENJ=2.5L 4 Cyl 16V Turbo Diesel Eng.	DGQ=5-Spd Auto. 5-45RFE Trans.
			ED1=2.4L 4 Cyl DOHC 16v SMPI Eng.	DEH=6-Speed Man. NSG370 Trans.
				DDD=5-Speed HD Man. Trans.
				DDK=5-Speed HD Man. Trans.

AR = Use as required - = Non illustrated part # = New this model year

Door, Rear, Glass and Regulator
Figure DKJ-220

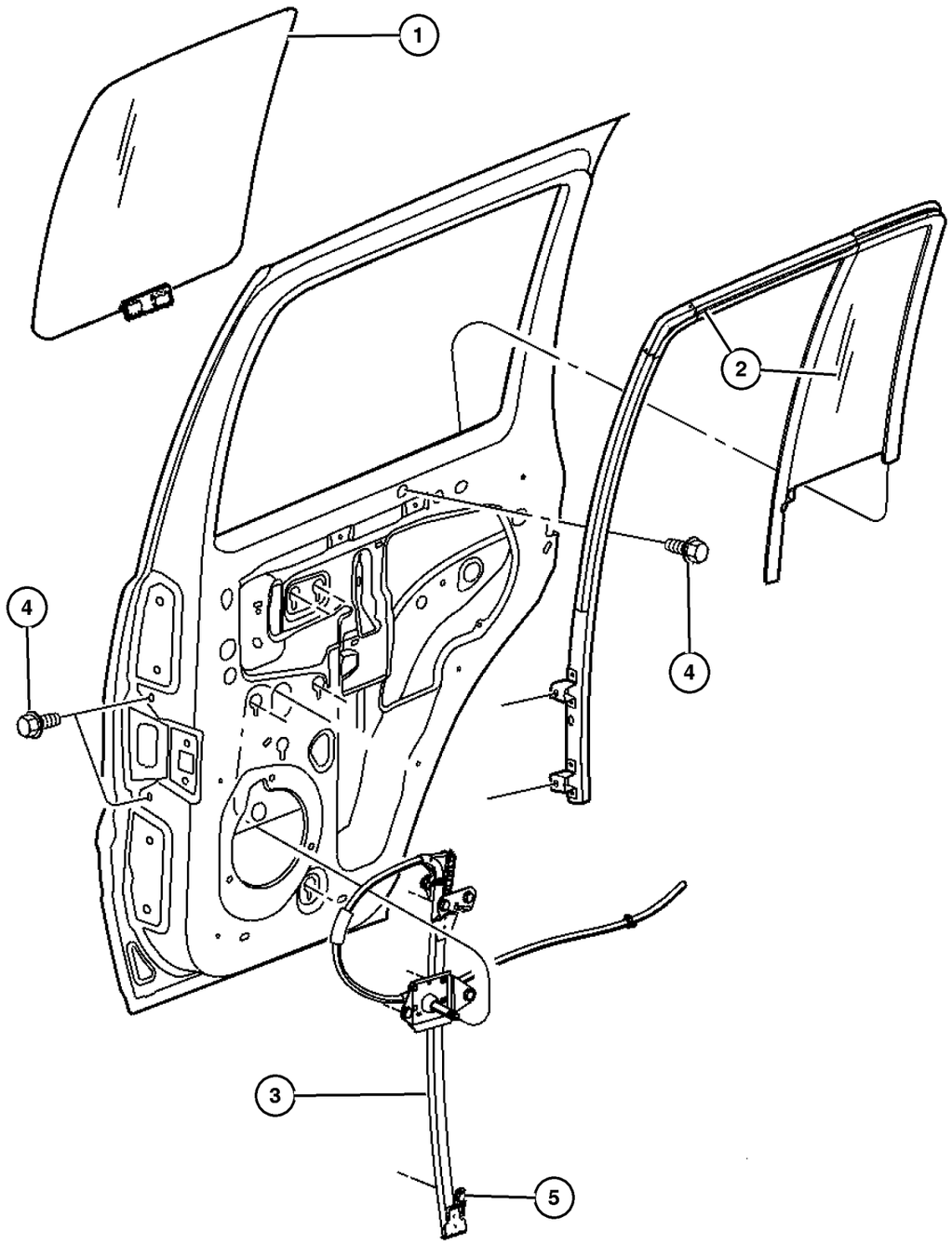

ITEM	PART NUMBER	QTY	LINE	SERIES	BODY	ENGINE	TRANS	TRIM	DESCRIPTION
Note:									
Sales Codes:									
[GEG] = Glass - Deep Tint Sunscreen									
[GEJ] = Glass - Tinted									
1									GLASS, Rear Door, Roll Up
	55360 376AG	1							[GEJ], Right
	55360 377AG	1							[GEJ], Left
	55360 378AH	1							[GEG], Right
	55360 379AH	1							[GEG], Left
2									GLASS, Rear Door, Fixed, With Weatherstrip
	55360 960AA	1							[GEG], Right
	55360 961AA	1							[GEG], Left
	55360 962AA	1							[GEJ], Right
	55360 963AA	1							[GEJ], Left
3									REGULATOR, Rear Door Window
	55360 034AJ	1							Right
	55360 035AJ	1							Left
4									SCREW, M6X1.00X15.5, (NOT SERVICED) (Not Serviced)
5	6504 029	6							BOLT, Hex Flange Head, M6x1.0x20

2006 Liberty (KJ)

SERIES	LINE	BODY	ENGINE	TRANSMISSION
H =HIGHLINE	T =JEEP - 2WD	74 =SPORT UTILITY 4-DR	EKG=3.7L V6 Eng.	DG6=4-Spd. Auto. 42RLE Trans.
M =MEDIUM	J =JEEP - 4WD		ENR=2.8L 4 Cyl Turbo Diesel Eng.	DGV=4-Spd. Auto. VLP Trans.
P =PREMIUM	U =JEEP - 4WD (RHD)		ENJ=2.5L 4 Cyl 16V Turbo Diesel Eng.	DGQ=5-Spd Auto. 5-45RFE Trans.
			ED1=2.4L 4 Cyl DOHC 16v SMPI Eng.	DEH=6-Speed Man. NSG370 Trans.
				DDD=5-Speed HD Man. Trans.
				DDK=5-Speed HD Man. Trans.

Door, Rear, Lock and Controls
Figure DKJ-230

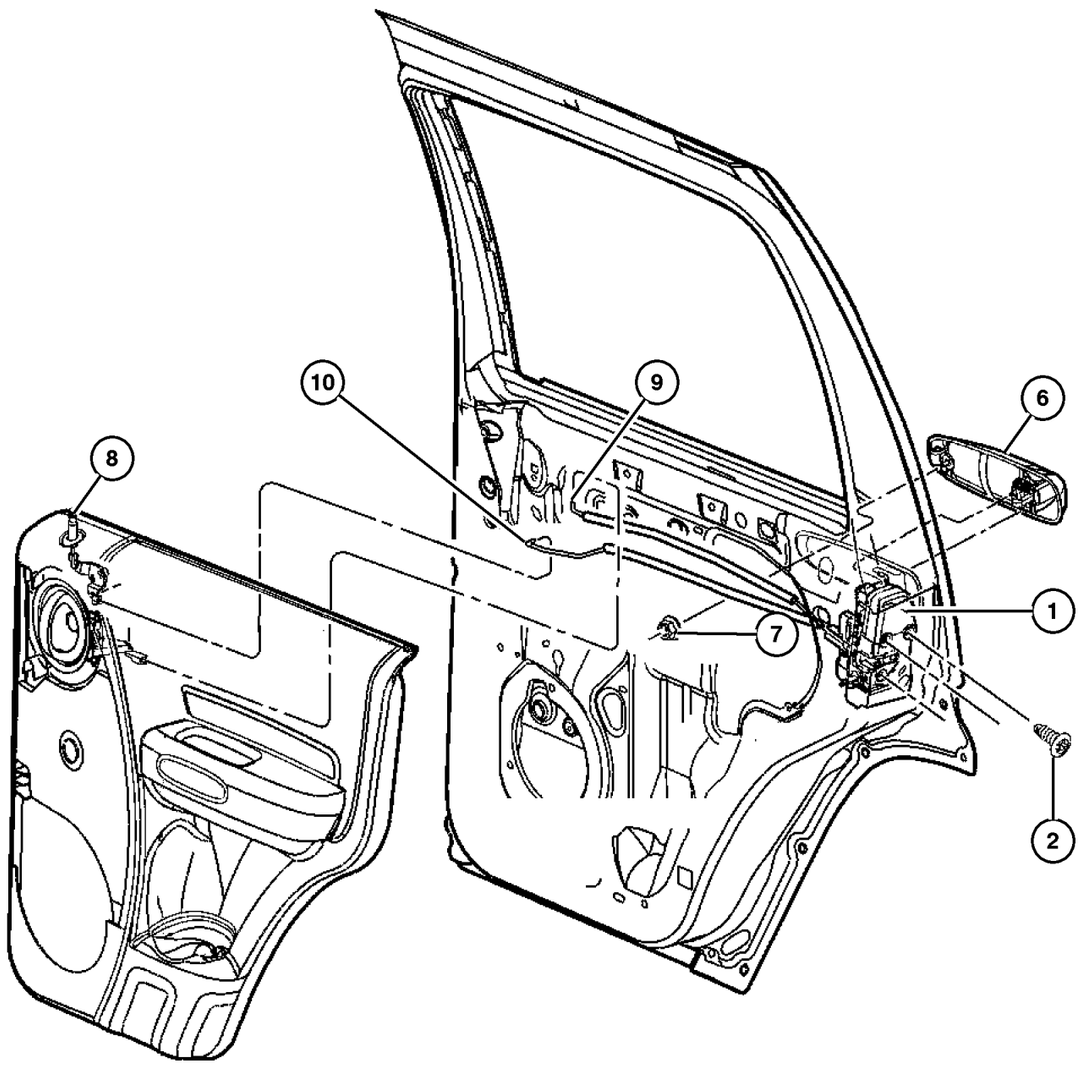

ITEM	PART NUMBER	QTY	LINE	SERIES	BODY	ENGINE	TRANS	TRIM	DESCRIPTION
1									LATCH, Rear Door
	55177 044AI	1							Right
	55177 045AI	1							Left
2	6033 876	6							SCREW, Tapping, M6.3x1.8x38.1
-3	4780 607AA-	2							STRIKER, Door, Right & Left
-4	5507 5483	AR							SPACER, Door Latch Striker
-5	6506 749AA-	4							SCREW, 6 Lobed, Used with Striker
6									HANDLE, Exterior Door
	55360 334AF	1							Right
	55360 335AF	1							Left
7	6503 226	2							NUT, Hex Flange, M5x.8
8									KNOB, Door Lock
	55360 464AB	1							Used up to 7/11/05, Right
	55360 465AB	1							Used up to 7/11/05, Left
	55360 464AD	1							Used After 7/11/05, Right
	55360 465AD	1							Used After 7/11/05, Left
9									ROD, Inside Handle to Latch
	5072 356AA	1							Right
	5072 357AA	1							Left
10									ROD, Inside Lock to Latch
	5072 360AB	1							Right
	5072 361AB	1							Left
-11									LINK, Exterior Door Handle
	5072 358AB-	1							Right
	5072 359AB-	1							Left

2006 Liberty (KJ)

SERIES	LINE	BODY	ENGINE	TRANSMISSION
H =HIGHLINE	T =JEEP - 2WD	74 =SPORT UTILITY 4-DR	EKG=3.7L V6 Eng.	DG6=4-Spd. Auto. 42RLE Trans.
M =MEDIUM	J =JEEP - 4WD		ENR=2.8L 4 Cyl Turbo Diesel Eng.	DGV=4-Spd. Auto. VLP Trans.
P =PREMIUM	U =JEEP - 4WD (RHD)		ENJ=2.5L 4 Cyl 16V Turbo Diesel Eng.	DGQ=5-Spd Auto. 5-45RFE Trans.
			ED1=2.4L 4 Cyl DOHC 16v SMPI Eng.	DEH=6-Speed Man. NSG370 Trans.
				DDD=5-Speed HD Man. Trans.
				DDK=5-Speed HD Man. Trans.

AR = Use as required - = Non illustrated part # = New this model year

Mirrors, Exterior
Figure DKJ-510

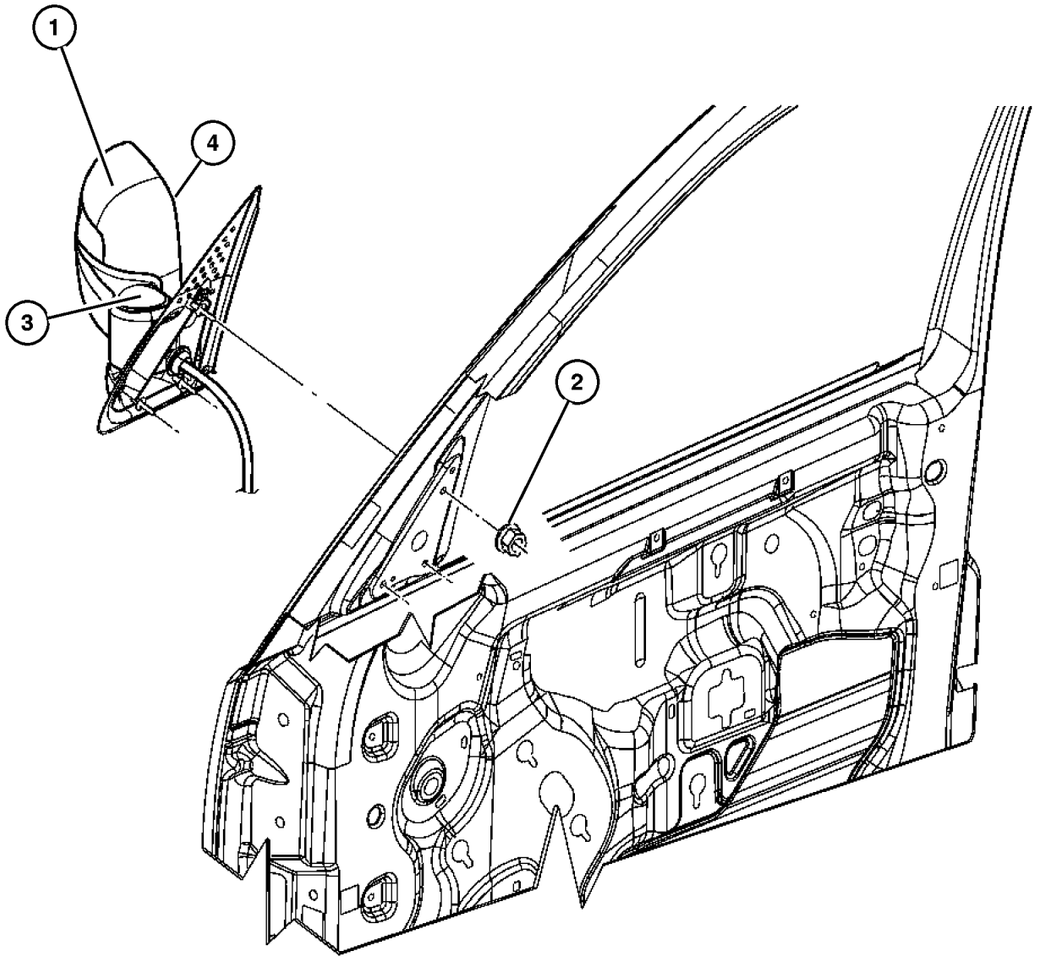

ITEM	PART NUMBER	QTY	LINE	SERIES	BODY	ENGINE	TRANS	TRIM	DESCRIPTION
Note;									
Sales Codes:									
[GT9] = Mirrors - Power Fold-Away									
[GTB] = Mirrors - Power Heated With Arabic Lettering									
[GTJ] = Mirrors - Power Heated Fold-Away									
[GTP] = Mirrors - Manual - Fold Away									
[GTS] = Mirrors - Power Heated									
1									MIRROR, Outside Rearview
	55155 836AF	1	J, T						[GTP], Right
	55155 837AF	1	J, T						[GTP], Left
	55155 839AG	1	J, T						[GTB], Right
	55155 840AG	1	J, T						[GT9], Right
	55155 841AG	1	J, T						[GT9], Left
	55155 842AG	1							[GTS], Right
	55155 843AG	1	J, T						[GTS] Or [GTB], Left
	55155 846AF	1	U						[GTJ], Right
	55155 847AF	1	U						[GTJ], Left
2	6504 047	6							NUT AND WASHER, Hex, M5x.80
3									COVER, Mirror Flag
	5086 298AA	1							Right
	5086 299AA	1	J, T						Left
		1	U						Left
4									GLASS, Mirror Replacement
	5083 982AA	1	J, T						[GTP], Right
	5083 983AA	1	J, T						[GTP], Left
	5134 236AA	1							[GTS], Right
	5134 237AA	1	J, T						[GTS] Or [GTB], Left
	5134 238AA	1	J, T						[GT9], Right
	5134 239AA	1	J, T						[GT9], Left
	5134 240AA	1	U						[GTJ], Right
	5134 241AA	1	U						[GTJ], Left
	5134 242AA	1	J, T						[GTB], Right

2006 Liberty (KJ)

SERIES	LINE	BODY	ENGINE	TRANSMISSION
H =HIGHLINE	T =JEEP - 2WD	74 =SPORT UTILITY 4-DR	EKG=3.7L V6 Eng.	DG6=4-Spd. Auto. 42RLE Trans.
M =MEDIUM	J =JEEP - 4WD		ENR=2.8L 4 Cyl Turbo Diesel Eng.	DGV=4-Spd. Auto. VLP Trans.
P =PREMIUM	U =JEEP - 4WD (RHD)		ENJ=2.5L 4 Cyl 16V Turbo Diesel Eng.	DGQ=5-Spd Auto. 5-45RFE Trans.
			ED1=2.4L 4 Cyl DOHC 16v SMPI Eng.	DEH=6-Speed Man. NSG370 Trans.
				DDD=5-Speed HD Man. Trans.
				DDK=5-Speed HD Man. Trans.

Door, Front
Figure DKJ-610

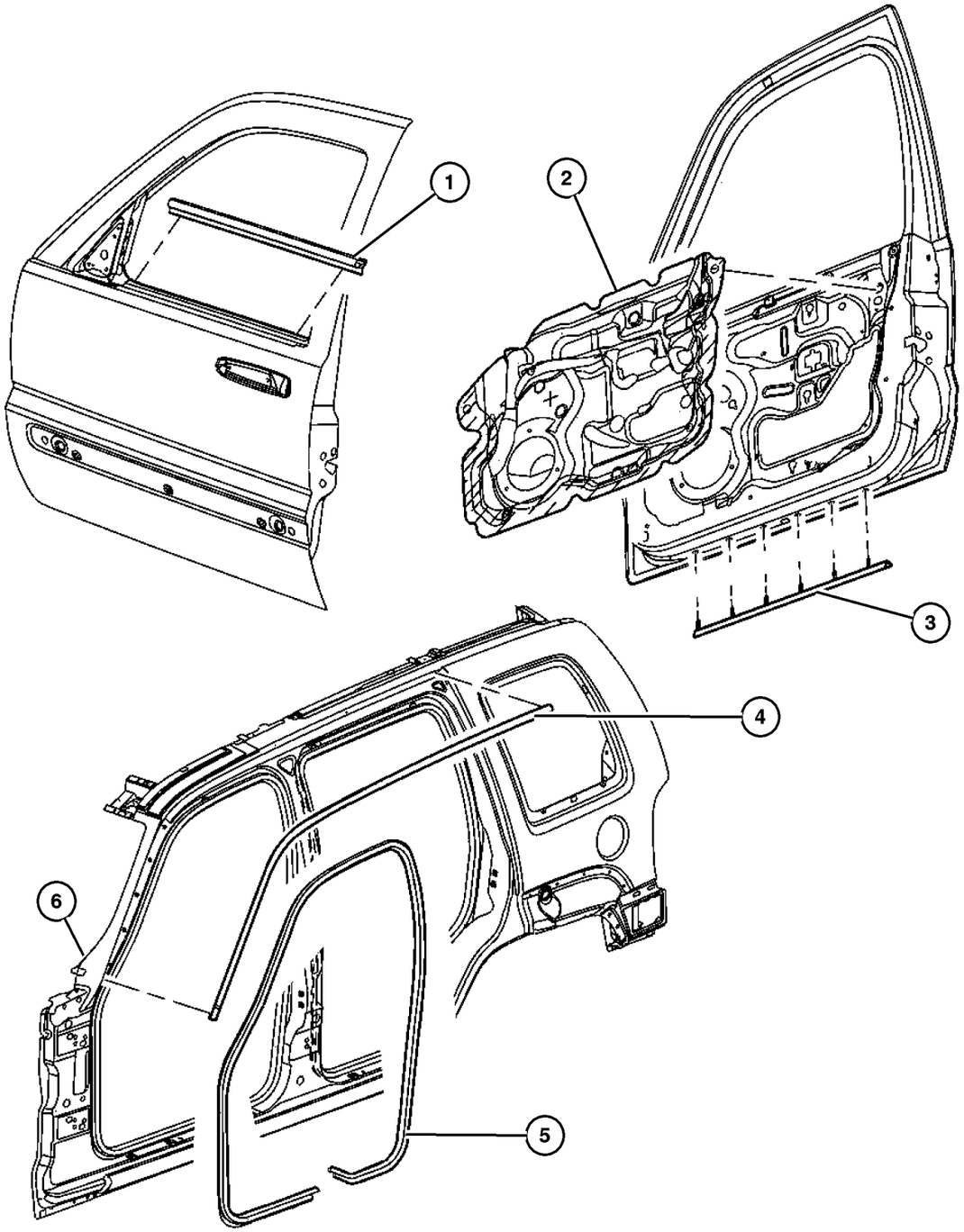

ITEM	PART NUMBER	QTY	LINE	SERIES	BODY	ENGINE	TRANS	TRIM	DESCRIPTION
1									WEATHERSTRIP, Door Belt
	55360 642AB	1							Right
	55360 643AB	1							Left
2									WATERDAM, Front Door
	55235 892AH	1							Right
	55235 893AH	1							Left
3	55360 663AA	2							SEAL, Rocker
4									SEAL, Door
	55235 918AJ	1							Right
	55235 919AJ	1							Left
5	55360 965AA	2							WEATHERSEAL, Full Door To Body
6									SEAL, A-Pillar Blocker, Body Mounted
	55360 542AD	1							Right
	55360 543AD	1							Left
-7	55360 256AC-	2							SEAL, A-Pillar, Door Mounted

2006 Liberty (KJ)

SERIES	LINE	BODY	ENGINE	TRANSMISSION
H =HIGHLINE	T =JEEP - 2WD	74 =SPORT UTILITY 4-DR	EKG=3.7L V6 Eng.	DG6=4-Spd. Auto. 42RLE Trans.
M =MEDIUM	J =JEEP - 4WD		ENR=2.8L 4 Cyl Turbo Diesel Eng.	DGV=4-Spd. Auto. VLP Trans.
P =PREMIUM	U =JEEP - 4WD (RHD)		ENJ=2.5L 4 Cyl 16V Turbo Diesel Eng.	DGQ=5-Spd Auto. 5-45RFE Trans.
			ED1=2.4L 4 Cyl DOHC 16v SMPI Eng.	DEH=6-Speed Man. NSG370 Trans.
				DDD=5-Speed HD Man. Trans.
				DDK=5-Speed HD Man. Trans.

Door, Rear
Figure DKJ-620

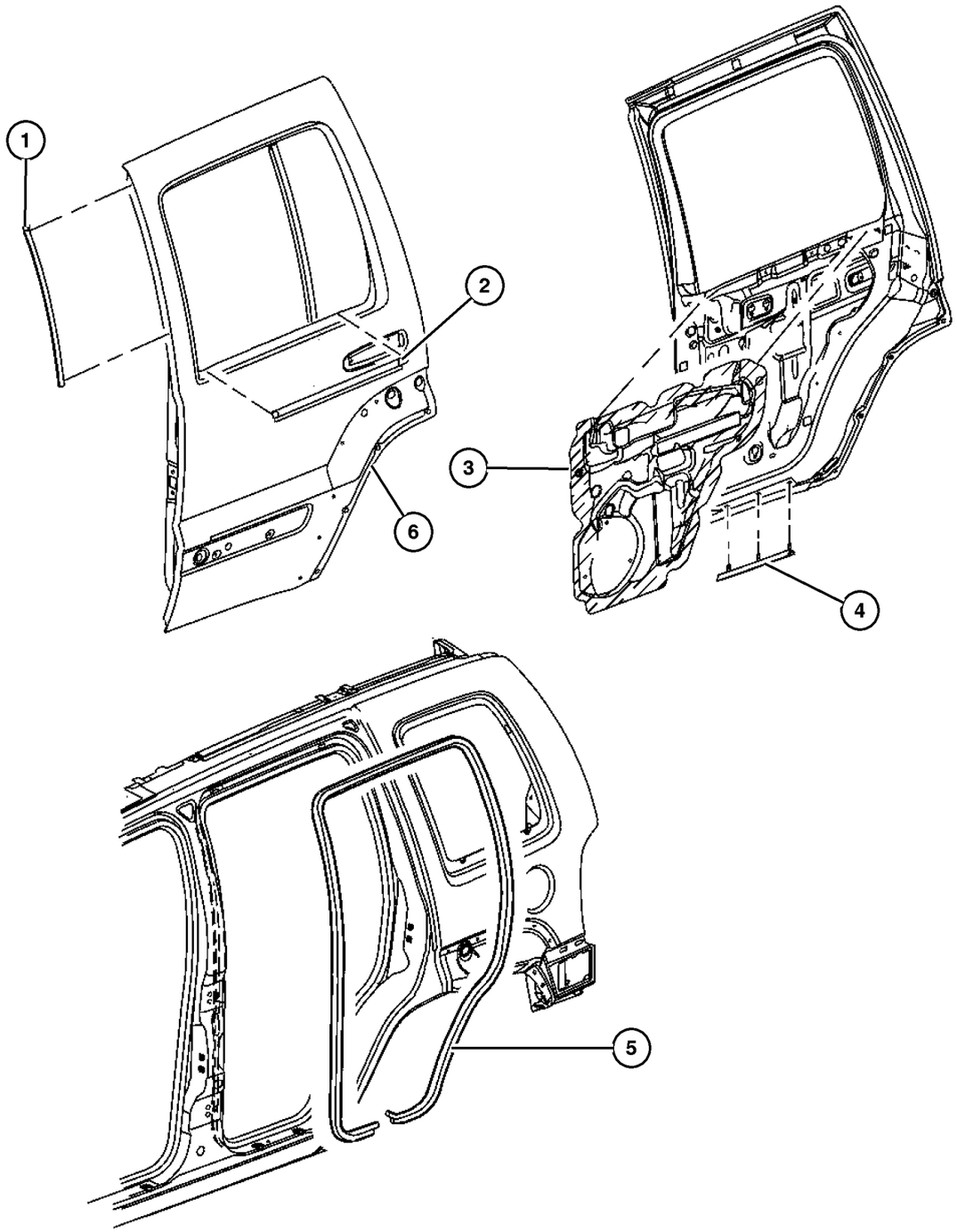

ITEM	PART NUMBER	QTY	LINE	SERIES	BODY	ENGINE	TRANS	TRIM	DESCRIPTION
1	55360 780AA	2							WEATHERSTRIP, B Pillar
									Secondary
2									WEATHERSTRIP, Belt
	55360 644AD	1							Right
	55360 645AD	1							Left
3									WATERDAM, Rear Door
	55235 894AJ	1							Right
	55235 895AJ	1							Left
4	55360 664AA	2							SEAL, Rocker
5	55360 964AA	2							WEATHERSEAL, Full Door To Body
6	55360 254AA	1							SEAL, Moulding, Right Or Left

2006 Liberty (KJ)

SERIES	LINE	BODY	ENGINE	TRANSMISSION
H =HIGHLINE	T =JEEP - 2WD	74 =SPORT UTILITY 4-DR	EKG=3.7L V6 Eng.	DG6=4-Spd. Auto. 42RLE Trans.
M =MEDIUM	J =JEEP - 4WD		ENR=2.8L 4 Cyl Turbo Diesel Eng.	DGV=4-Spd. Auto. VLP Trans.
P =PREMIUM	U =JEEP - 4WD (RHD)		ENJ=2.5L 4 Cyl 16V Turbo Diesel Eng.	DGQ=5-Spd Auto. 5-45RFE Trans.
			ED1=2.4L 4 Cyl DOHC 16v SMPI Eng.	DEH=6-Speed Man. NSG370 Trans.
				DDD=5-Speed HD Man. Trans.
				DDK=5-Speed HD Man. Trans.

Group – EKJ

Exterior Ornamentation

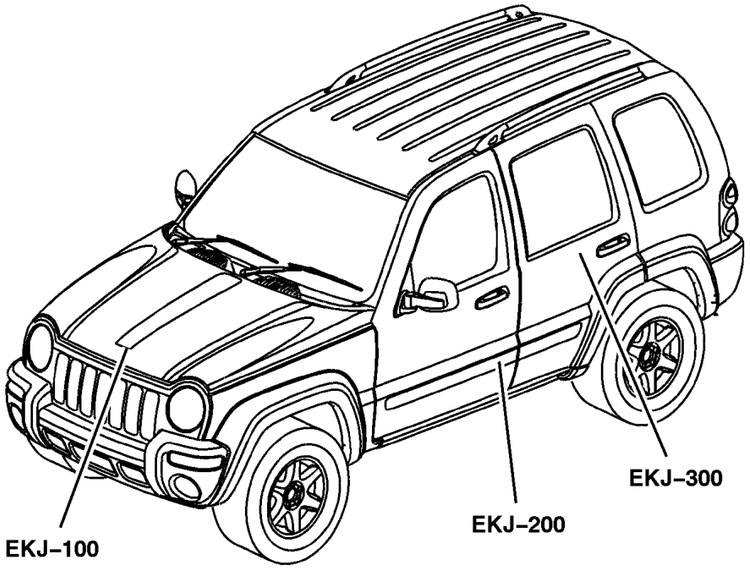

EKJ–100 Nameplates	EKJ–200 Moldings and Ornamentation		
	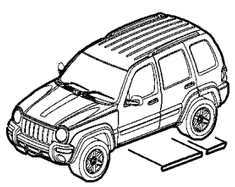		

GROUP EKJ - Exterior Ornamentation

Illustration Title — Group-Fig. No.

Nameplates

Nameplates . . . . . Fig. EKJ-110

Moldings and Ornamentation

Molding and Fender Flares With Liners . . . . . Fig. EKJ-210

Side Rails, Tubular [MRK] . . . . . Fig. EKJ-220

Nameplates
Figure EKJ-110

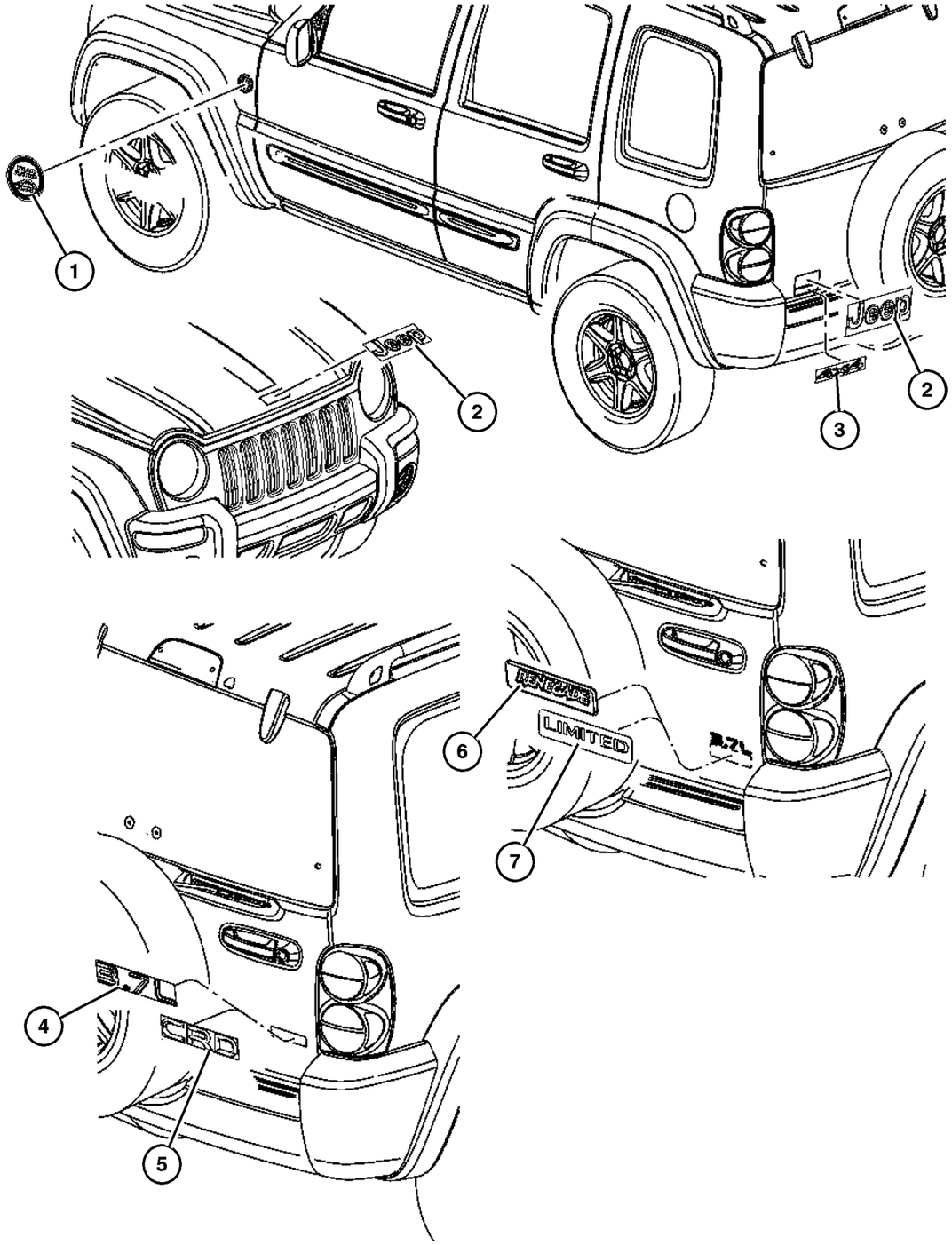

ITEM	PART NUMBER	QTY	LINE	SERIES	BODY	ENGINE	TRANS	TRIM	DESCRIPTION
1	55157 318AB	1							MEDALLION, Trail Rated
2	55157 088AB	1							NAMEPLATE, Jeep
3	55157 091AB	1							NAMEPLATE, 4X4
4	55157 096AB	1							NAMEPLATE, 3.7L
5	55157 095AB	1							NAMEPLATE, CRD
6	55157 097AB	2							NAMEPLATE, Renegade
7	55157 090AB	1							NAMEPLATE, Limited

2006 Liberty (KJ)

SERIES	LINE	BODY	ENGINE	TRANSMISSION
H =HIGHLINE	T =JEEP - 2WD	74 =SPORT UTILITY 4-DR	EKG=3.7L V6 Eng.	DG6=4-Spd. Auto. 42RLE Trans.
M =MEDIUM	J =JEEP - 4WD		ENR=2.8L 4 Cyl Turbo Diesel Eng.	DGV=4-Spd. Auto. VLP Trans.
P =PREMIUM	U =JEEP - 4WD (RHD)		ENJ=2.5L 4 Cyl 16V Turbo Diesel Eng.	DGQ=5-Spd Auto. 5-45RFE Trans.
			ED1=2.4L 4 Cyl DOHC 16v SMPI Eng.	DEH=6-Speed Man. NSG370 Trans.
				DDD=5-Speed HD Man. Trans.
				DDK=5-Speed HD Man. Trans.

Molding and Fender Flares With Liners
Figure EKJ-210

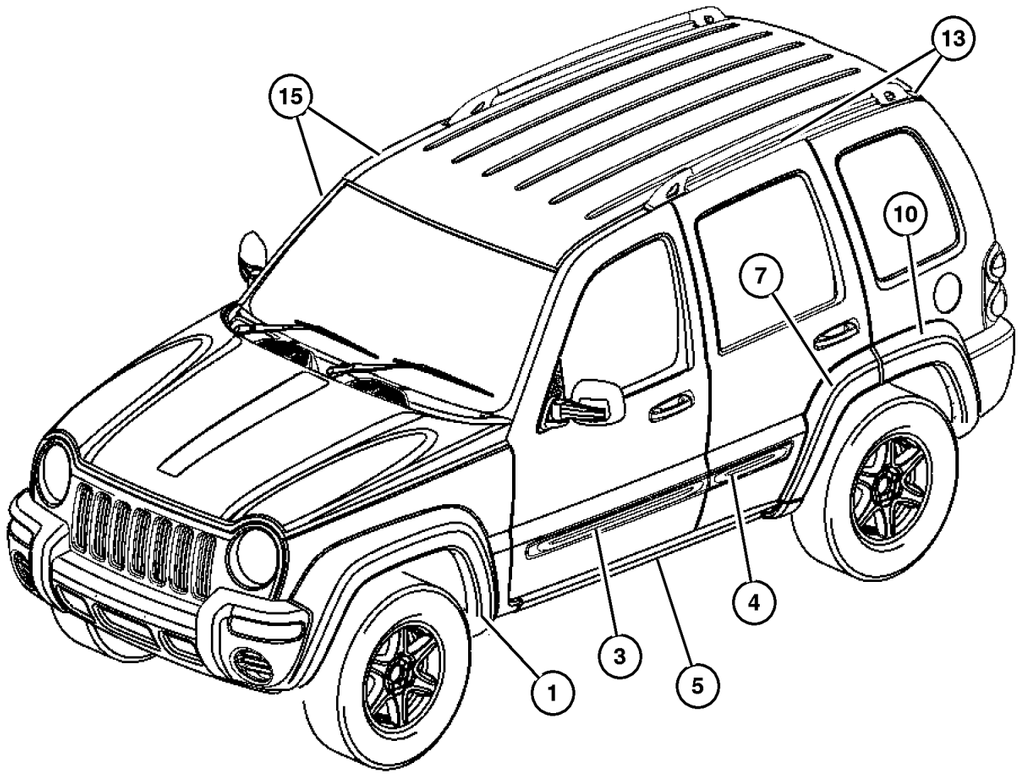

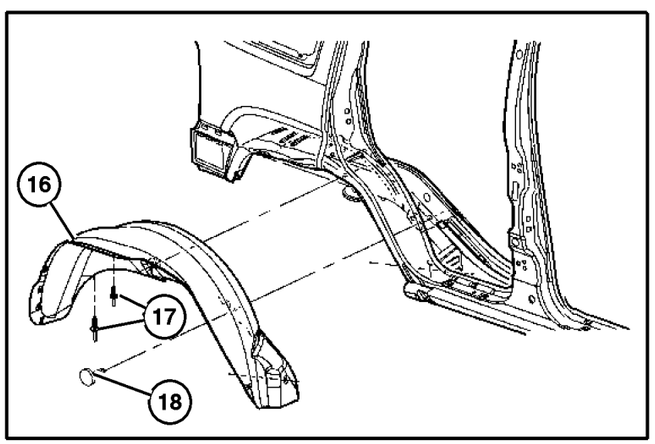

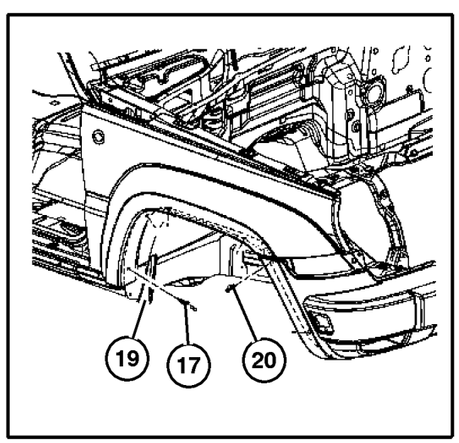

ITEM	PART NUMBER	QTY	LINE	SERIES	BODY	ENGINE	TRANS	TRIM	DESCRIPTION
1									APPLIQUE, Fender Wheel Opening
	5JH42 TZZAE	1							[K5C], Right
	5JH43 TZZAE	1							[K5C], Left
	5JH42 TZZAE	1							[K5D], Right
	5JH43 TZZAE	1							[K5D], Left
	5JH42 TZZAE	1							[K5G], Right
	5JH43 TZZAE	1							[K5G], Left
	5JH42 TZZAE	1							[K5K], Right
	5JH43 TZZAE	1							[K5K], Left
	5JH42 TZZAE	1							[K5M], Right
	5JH43 TZZAE	1							[K5M], Left
	5JH42 TZZAE	1							[K5S], Right
	5JH43 TZZAE	1							[K5S], Left
	5JH42 TZZAE	1							[K5T], Right
	5JH43 TZZAE	1							[K5T], Left
	5JH42 TZZAE	1							[K5W], Right
	5JH43 TZZAE	1							[K5W], Left
	5JH42 TZZAE	1							[K5X]
	5JH43 TZZAE	1							[K5X], Left
	5JH46 BDLAE	1							[K3L], Right
	5JH47 BDLAE	1							[K3L], Left
	5JR68 CD7AG	1							[K3P], Right
	5JR69 CD7AG	1							[K3P], Left
	5JR68 CJMAG	1							[K3E], Right
	5JR69 CJMAG	1							[K3E], Left
-2	55157 055AA-	10							PIN, Push
3									MOLDING, Front Door
	55156 944AA	1	J, U	P					Cherokee-Chrome, Lower Right
	55156 945AA	1	J, U	P					Cherokee-Chrome, Lower Left
	55156 946AA	1	J, T	P					Liberty-Chrome, Lower Right
	55156 947AA	1	J, T	P					Liberty-Chrome, Lower Left
	5JR86 BDLAA	1							[K1L] -Liberty, Lower Right
	5JR87 BDLAA	1							[K1L] -Liberty, Lower Left
	5JR86 CD7AA	1							[K1P] -Liberty, Lower Right
	5JR87 CD7AA	1							[K1P] -Liberty, Lower Left
	5JR86 CJMAA	1							[K1E] -Liberty, Lower Right
	5JR87 CJMAA	1							[K1E] -Liberty, Lower Left
	5JT06 CD7AA	1							[K1P] -Cherokee, Lower Right
	5JT07 CD7AA	1							[K1P] -Cherokee, Lower Left
	5JT06 CJMAA	1							[K1E] -Cherokee, Lower Right
	5JT07 CJMAA	1							[K1E] -Cherokee, Lower Left
	5JT06 BDLAA	1							[K1L] -Cherokee, Lower Right
	5JT07 BDLAA	1							[K1L] -Cherokee, Lower Left

2006 Liberty (KJ)

SERIES	LINE	BODY	ENGINE	TRANSMISSION
H =HIGHLINE	T =JEEP - 2WD	74 =SPORT UTILITY 4-DR	EKG=3.7L V6 Eng.	DG6=4-Spd. Auto. 42RLE Trans.
M =MEDIUM	J =JEEP - 4WD		ENR=2.8L 4 Cyl Turbo Diesel Eng.	DGV=4-Spd. Auto. VLP Trans.
P =PREMIUM	U =JEEP - 4WD (RHD)		ENJ=2.5L 4 Cyl 16V Turbo Diesel Eng.	DGQ=5-Spd Auto. 5-45RFE Trans.
			ED1=2.4L 4 Cyl DOHC 16v SMPI Eng.	DEH=6-Speed Man. NSG370 Trans.
				DDD=5-Speed HD Man. Trans.
				DDK=5-Speed HD Man. Trans.

Molding and Fender Flares With Liners
Figure EKJ-210

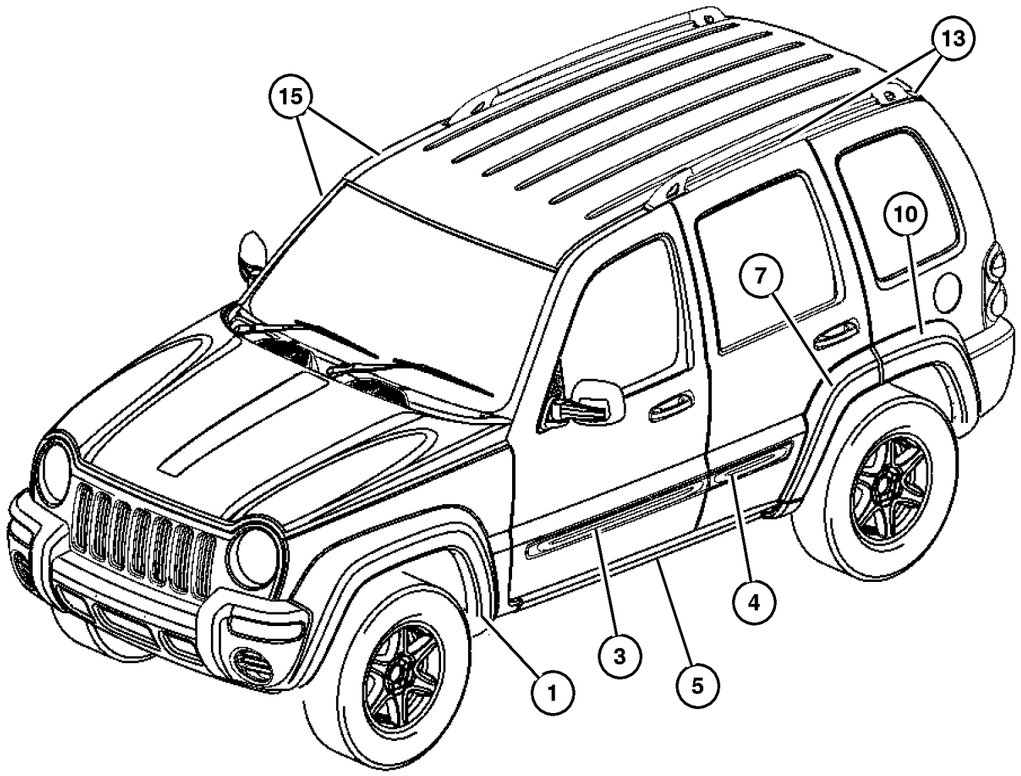

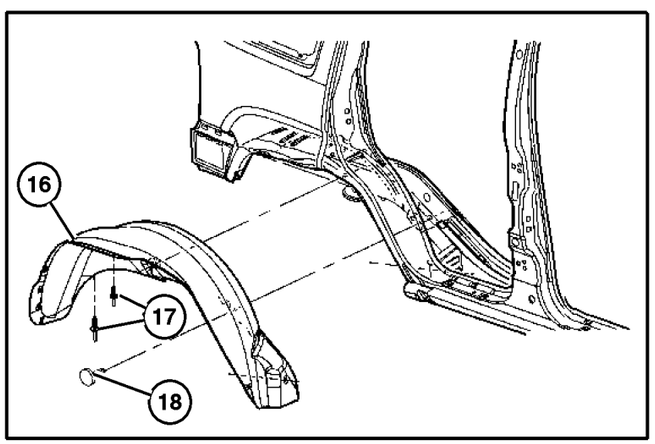

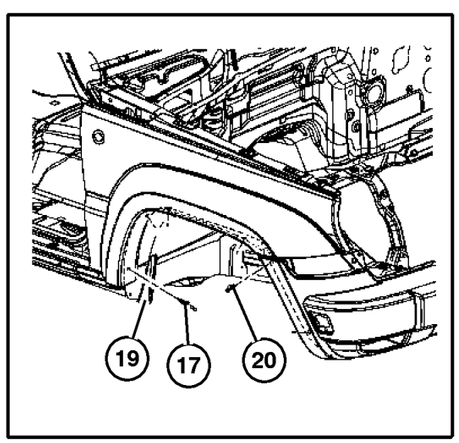

ITEM	PART NUMBER	QTY	LINE	SERIES	BODY	ENGINE	TRANS	TRIM	DESCRIPTION
4									MOLDING, Rear Door
	55156 948AA	1		P					Chrome, Lower Right
	55156 949AA	1		P					Chrome, Lower Left
	5JR88 BDLAA	1		H, M					[K1L], Right
	5JR89 BDLAA	1		H, M					[K1L], Left
	5JR88 CD7AA	1		H, M					[K1P], Right
	5JR89 CD7AA	1		H, M					[K1P], Left
	5JR88 CJMAA	1		H, M					[K1E], Right
	5JR89 CJMAA	1		H, M					[K1E], Left
5									MOLDING, Side Sill
	5JH90 XXXAF	1							Front, Right
	5JH91 XXXAG	1							Rear, Left
-6									PUSH PIN
	55157 069AB-	2							To Bodyside Upper
	55157 070AC-	3							To Bodyside Lower
7									APPLIQUE, Rear Door
	5JH56 TZZAG	1							[K5C], Right
		1							[K5D], Right
		1							[K5G], Right
		1							[K5K], Right
		1							[K5M], Right
		1							[K5S], Right
		1							[K5T], Right
		1							[K5W], Right
		1							[K5X], Right
	5JH57 TZZAG	1							[K5C], Left
		1							[K5D], Left
		1							[K5G], Left
		1							[K5K], Left
		1							[K5M], Left
		1							[K5S], Left
		1							[K5T], Left
		1							[K5W], Left
		1							[K5X], Left
	5JH84 BDLAG	1							[K3L], Right
	5JH85 BDLAG	1							[K3L], Left
-8									PIN, Push
	55157 055AA-	5							Flare to Rear Door
		5							Rear Door Flare to Rear Door
-9	55360 254AA-	1							SEAL, Moulding, Rear Door Flare
10									APPLIQUE, Rear Wheel Opening
	5JH68 BB8AD	1							[K5G], Right
	5JH69 BB8AD	1							[K5G], Left

2006 Liberty (KJ)

SERIES	LINE	BODY	ENGINE	TRANSMISSION
H =HIGHLINE	T =JEEP - 2WD	74 =SPORT UTILITY 4-DR	EKG=3.7L V6 Eng.	DG6=4-Spd. Auto. 42RLE Trans.
M =MEDIUM	J =JEEP - 4WD		ENR=2.8L 4 Cyl Turbo Diesel Eng.	DGV=4-Spd. Auto. VLP Trans.
P =PREMIUM	U =JEEP - 4WD (RHD)		ENJ=2.5L 4 Cyl 16V Turbo Diesel Eng.	DGQ=5-Spd Auto. 5-45RFE Trans.
			ED1=2.4L 4 Cyl DOHC 16v SMPI Eng.	DEH=6-Speed Man. NSG370 Trans.
				DDD=5-Speed HD Man. Trans.
				DDK=5-Speed HD Man. Trans.

Molding and Fender Flares With Liners
Figure EKJ-210

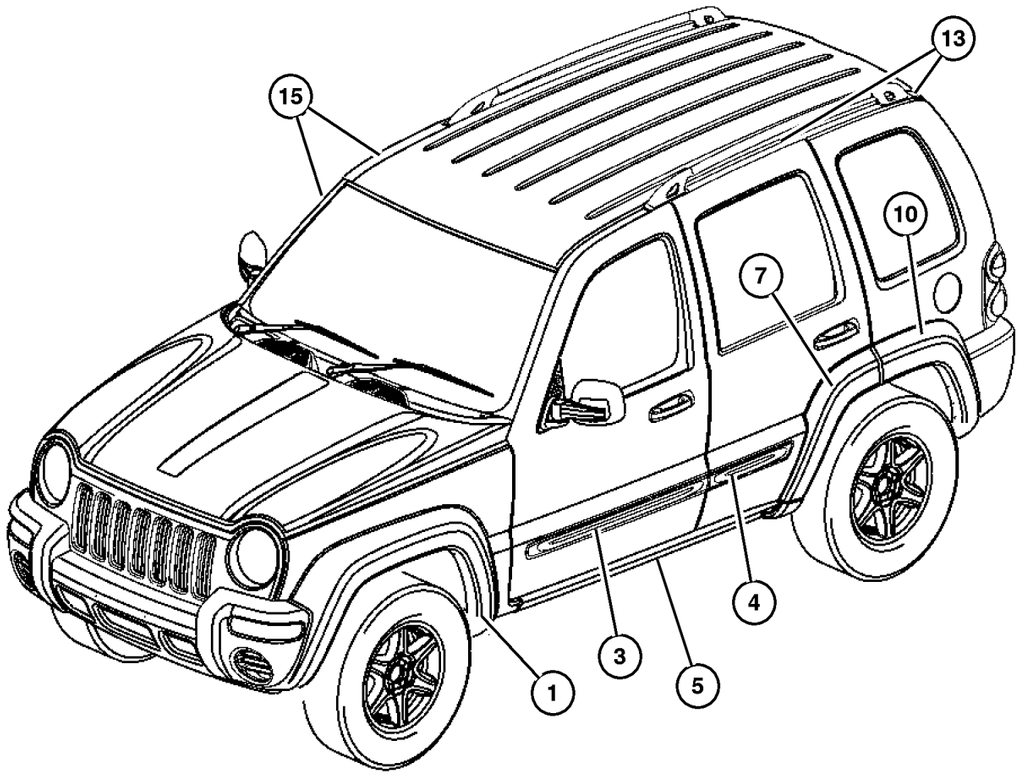

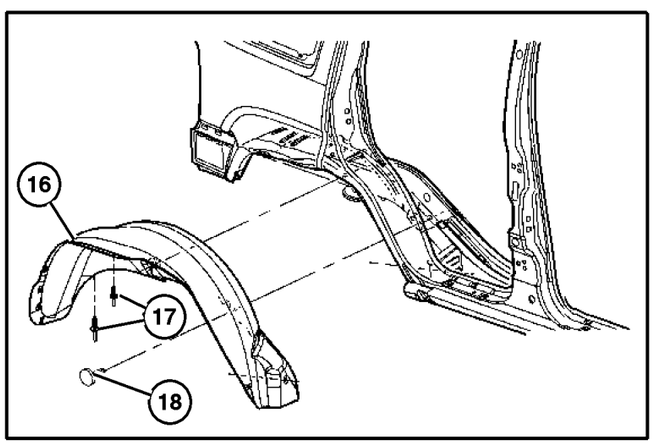

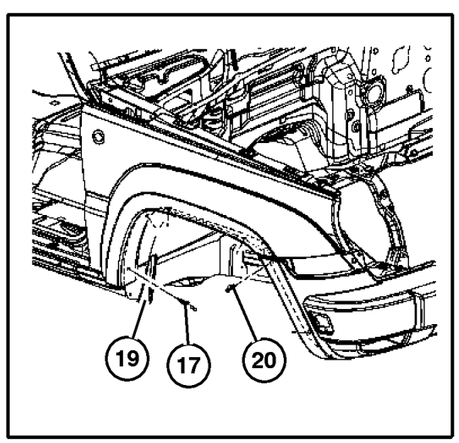

ITEM	PART NUMBER	QTY	LINE	SERIES	BODY	ENGINE	TRANS	TRIM	DESCRIPTION
	5JH68 TZZAD	1							[K5C], Right
	5JH69 TZZAD	1							[K5C], Left
	5JH68 TZZAD	1							[K5D], Right
	5JH69 TZZAD	1							[K5D], Left
	5JH68 TZZAD	1							[K5K], Right
	5JH69 TZZAD	1							[K5K], Left
	5JH68 TZZAD	1							[K5M], Right
	5JH69 TZZAD	1							[K5M], Left
	5JH68 TZZAD	1							[K5S], Right
	5JH69 TZZAD	1							[K5S], Left
	5JH68 TZZAD	1							[K5T], Right
	5JH69 TZZAD	1							[K5T], Left
	5JH68 TZZAD	1							[K5W], Right
	5JH69 TZZAD	1							[K5W], Left
	5JH68 TZZAD	1							[K5X], Right
	5JH69 TZZAD	1							[K5X], Left
	5JH72 BDLAD	1							[K3L], Right
	5JH73 BDLAD	1							[K3L], Left
	5JR70 CD7AF	1							K8P], Right
	5JR71 CD7AF	1							[K8P], Left
	5JR70 CJMAF	1							[K8E], Right
	5JR71 CJMAF	1							[K8E], Left
-11	55156 429AA-	2							RETAINER, Applique, Rear Flare to Rear Fascia
-12									PIN, Push
	55157 055AA-	5							Flare to Quarter
		5							Rear Flare to Bodyside
13									MOLDING, Roof
	55360 174AC	1							With Rack, Right
	55360 175AC	1							With Rack, Left
	55360 176AE	1							Without Rack, Right
	55360 177AE	1							Without Rack, Left
-14	0153 732	4							SCREW, .164-15x.500, Roof Molding
15									MOLDING, A-PILLAR
	55360 688AC	1							Windshield-Right
	55360 689AC	1							Windshield-Left
16									LINER, Fender Side
	55360 146AD	1							Right
	55360 147AD	1							Left
17									RIVET
	6506 007AA	8							Flare to Body Side, Rear
		2							Flare to Fascia, Rear
		8							Flare to Fascia, Front

2006 Liberty (KJ)

SERIES	LINE	BODY	ENGINE	TRANSMISSION
H =HIGHLINE	T =JEEP - 2WD	74 =SPORT UTILITY 4-DR	EKG=3.7L V6 Eng.	DG6=4-Spd. Auto. 42RLE Trans.
M =MEDIUM	J =JEEP - 4WD		ENR=2.8L 4 Cyl Turbo Diesel Eng.	DGV=4-Spd. Auto. VLP Trans.
P =PREMIUM	U =JEEP - 4WD (RHD)		ENJ=2.5L 4 Cyl 16V Turbo Diesel Eng.	DGQ=5-Spd Auto. 5-45RFE Trans.
			ED1=2.4L 4 Cyl DOHC 16v SMPI Eng.	DEH=6-Speed Man. NSG370 Trans.
				DDD=5-Speed HD Man. Trans.
				DDK=5-Speed HD Man. Trans.

Molding and Fender Flares With Liners
Figure EKJ-210

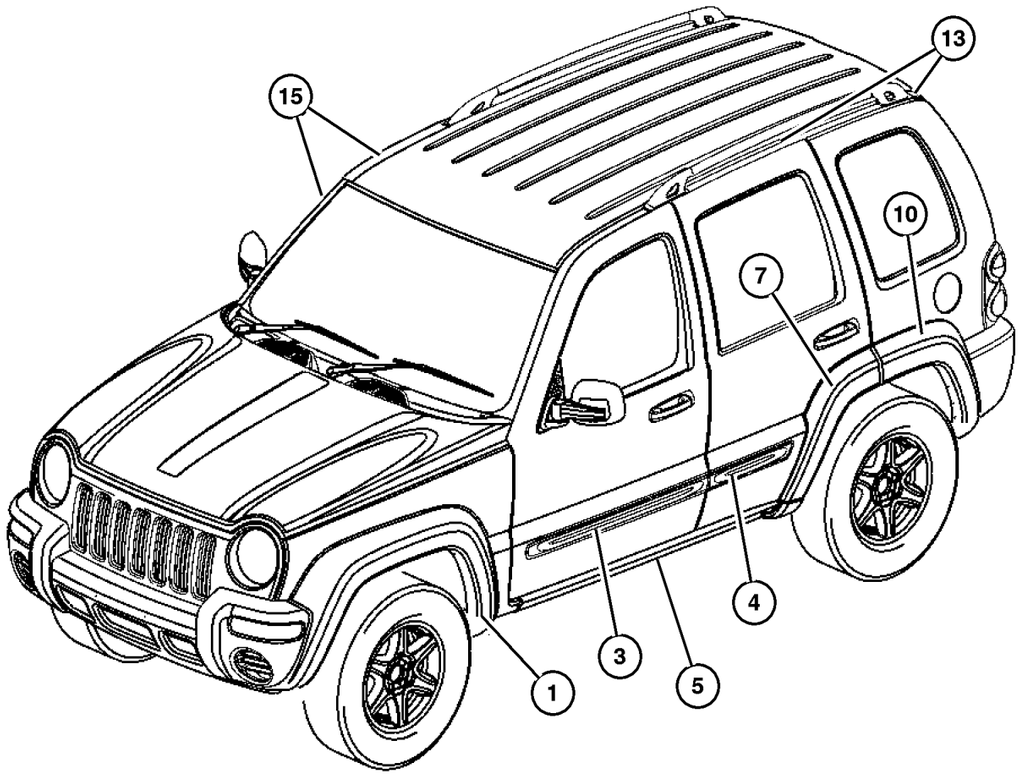

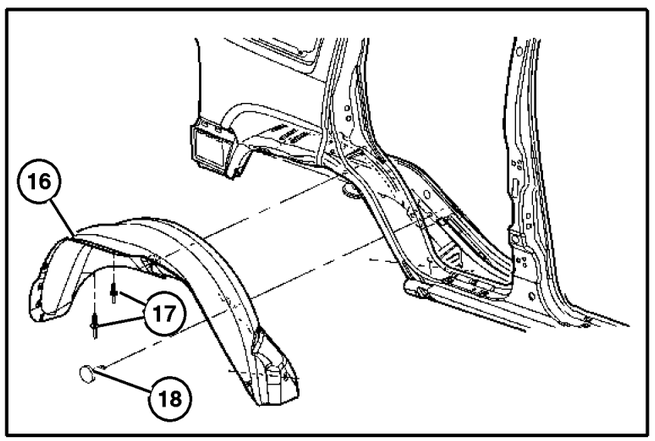

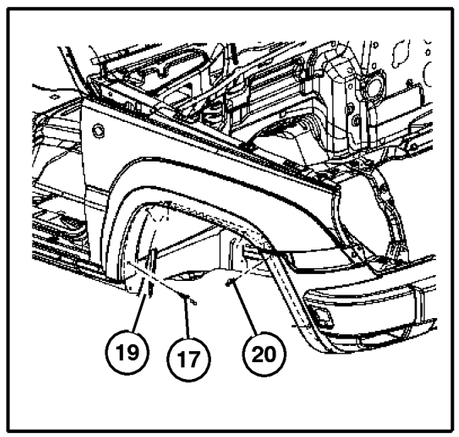

ITEM	PART NUMBER	QTY	LINE	SERIES	BODY	ENGINE	TRANS	TRIM	DESCRIPTION
18									PIN, Push
	6036 155AA	8							Front
		6							Rear
19									LINER, Front Fender
	55156 790AD	1							Right
	55156 791AD	1							Left
20	6503 598	4							PIN, Push, M8x21, Liner to Fascia

2006 Liberty (KJ)

SERIES	LINE	BODY	ENGINE	TRANSMISSION
H =HIGHLINE	T =JEEP - 2WD	74 =SPORT UTILITY 4-DR	EKG=3.7L V6 Eng.	DG6=4-Spd. Auto. 42RLE Trans.
M =MEDIUM	J =JEEP - 4WD		ENR=2.8L 4 Cyl Turbo Diesel Eng.	DGV=4-Spd. Auto. VLP Trans.
P =PREMIUM	U =JEEP - 4WD (RHD)		ENJ=2.5L 4 Cyl 16V Turbo Diesel Eng.	DGQ=5-Spd Auto. 5-45RFE Trans.
			ED1=2.4L 4 Cyl DOHC 16v SMPI Eng.	DEH=6-Speed Man. NSG370 Trans.
				DDD=5-Speed HD Man. Trans.
				DDK=5-Speed HD Man. Trans.

Side Rails, Tubular [MRK]
Figure EKJ-220

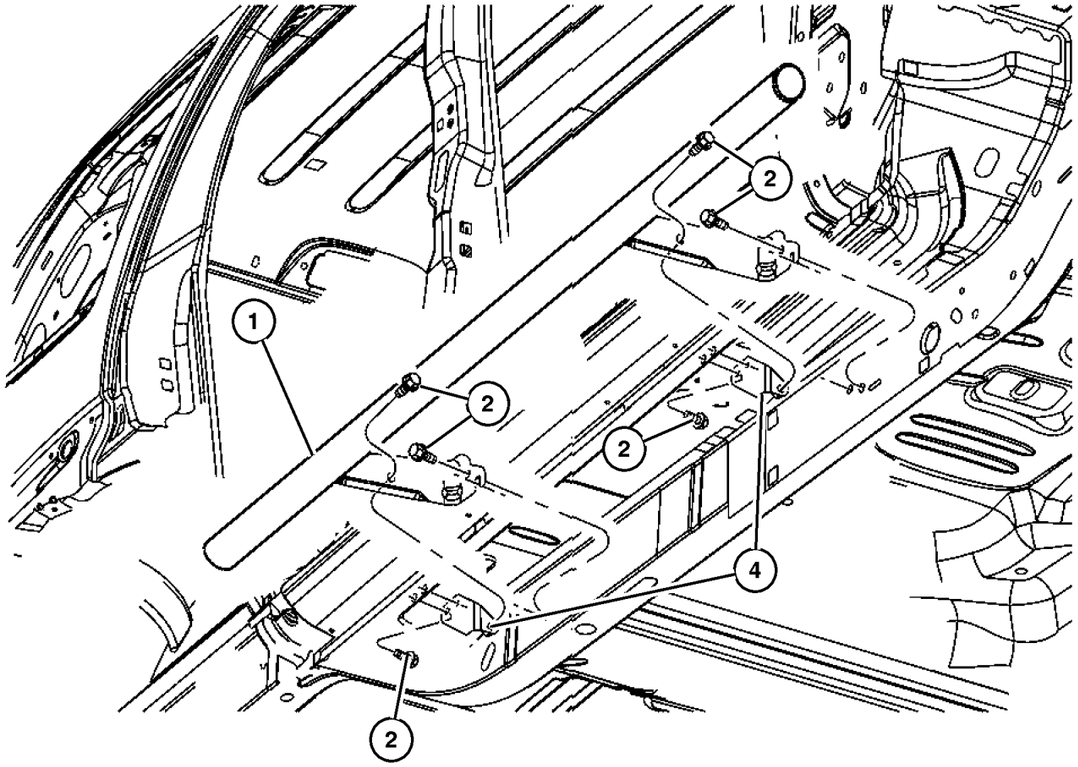

ITEM	PART NUMBER	QTY	LINE	SERIES	BODY	ENGINE	TRANS	TRIM	DESCRIPTION
1									RAIL, Rocker Panel
	5KF74 BS2AB	1							[K9A], Right
	5KF75 BS2AB	1							[K9A], Left
2	6100 592	8							SCREW, M8x1.25x30
-3	6507 091AA-	8							RIVNUT, Installation, M8x1.25x17.78,
									Rail Bracket to Frame
4									BRACKET, Side Rail
	55360 704AA	2							Right
	55360 705AA	2							Left

2006 Liberty (KJ)

SERIES	LINE	BODY	ENGINE	TRANSMISSION
H =HIGHLINE	T =JEEP - 2WD	74 =SPORT UTILITY 4-DR	EKG=3.7L V6 Eng.	DG6=4-Spd. Auto. 42RLE Trans.
M =MEDIUM	J =JEEP - 4WD		ENR=2.8L 4 Cyl Turbo Diesel Eng.	DGV=4-Spd. Auto. VLP Trans.
P =PREMIUM	U =JEEP - 4WD (RHD)		ENJ=2.5L 4 Cyl 16V Turbo Diesel Eng.	DGQ=5-Spd Auto. 5-45RFE Trans.
			ED1=2.4L 4 Cyl DOHC 16v SMPI Eng.	DEH=6-Speed Man. NSG370 Trans.
				DDD=5-Speed HD Man. Trans.
				DDK=5-Speed HD Man. Trans.

Group – IKJ
Interior Trim

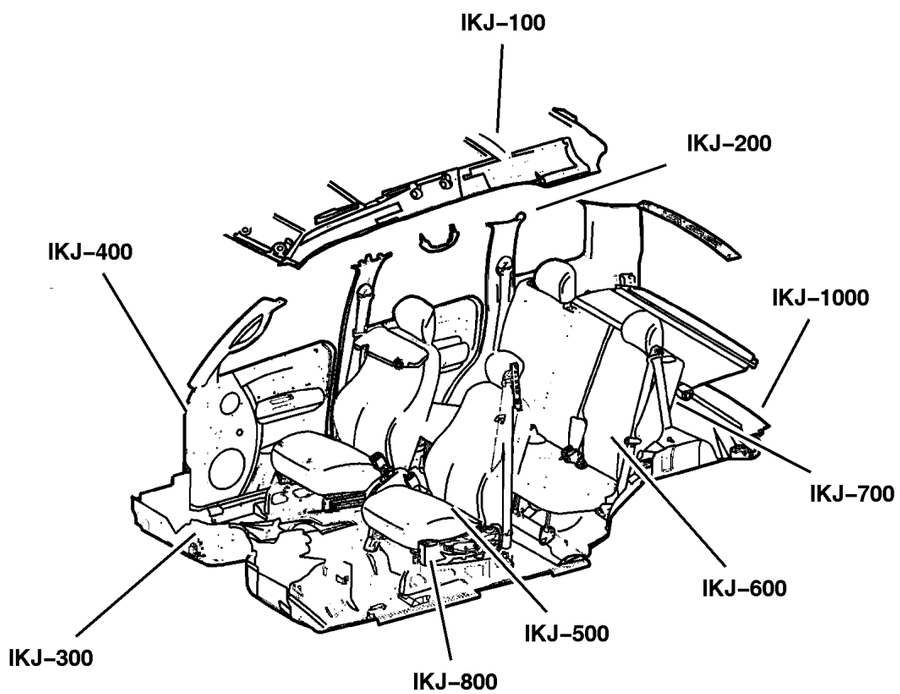

IKJ–100 Headliner and Visor 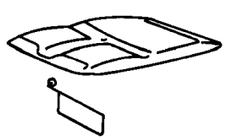	**IKJ–200** Moldings, Scuff Plates 	**IKJ–300** Carpet 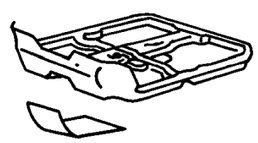	**IKJ–400** Door Trim Panels 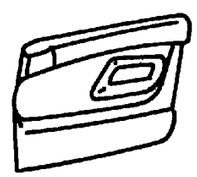
IKJ–500 Front Seats and Attaching Parts 	**IKJ–600** Rear Seats and Attaching Parts 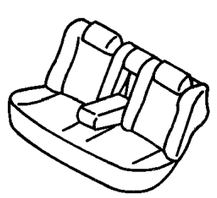	**IKJ–700** Seat Belts–Front and Rear 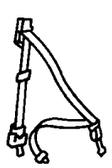	**IKJ–800** Adjusters, Covers, Shields, and Risers 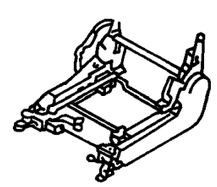

Group – IKJ
Interior Trim

IKJ–1000 Lift Gate Trim 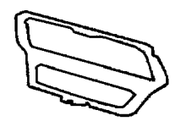			

GROUP IKJ - Interior Trim

Illustration Title	Group-Fig. No.
Headliner and Visor	
Headliner and Visors	Fig. IKJ-110
Moldings, Scuff Plates	
Panels, Interior Trim, Front	Fig. IKJ-210
Panels, Interior Trim, Rear	Fig. IKJ-220
Carpet	
Carpets and Mats	Fig. IKJ-310
Cargo Organizer	Fig. IKJ-320
Door Trim Panels	
Trim Panel, Front Door	Fig. IKJ-410
Trim Panel, Rear Door	Fig. IKJ-420
Front Seats and Attaching Parts	
Front Seat, Leather, Low Back, Trim Code [DL]	Fig. IKJ-510
Front Seat, Cloth, High Back, Trim Code [N5]	Fig. IKJ-520
Front Seat, Cloth, High Back, Trim Code [B5]	Fig. IKJ-530
Front Seat, Cloth, Low Back, Trim Code [B7]	Fig. IKJ-540
Front Seat, Cloth, Low Back, Trim Code [J7]	Fig. IKJ-560
Front Seat, Cloth, Low Back, Trim Code [L7]	Fig. IKJ-570
Rear Seats and Attaching Parts	
Rear Seat, Trim Code [DL]	Fig. IKJ-610
Rear Seat, Trim Code [N5]	Fig. IKJ-620
Rear Seat, Trim Code [B5]	Fig. IKJ-630
Rear Seat, Trim Code [B7]	Fig. IKJ-640
Rear Seat, Trim Code [J7]	Fig. IKJ-650
Rear Seat, Trim Code [L7]	Fig. IKJ-660
Seat Belts-Front and Rear	
Seat Belts, Front	Fig. IKJ-710
Seat Belts, Rear	Fig. IKJ-720
Adjusters, Covers, Shields, and Risers	
Recliner and Adjuster	Fig. IKJ-810
Lift Gate Trim	
Swing Gate Trim Panel	Fig. IKJ-1010

Headliner and Visors
Figure IKJ-110

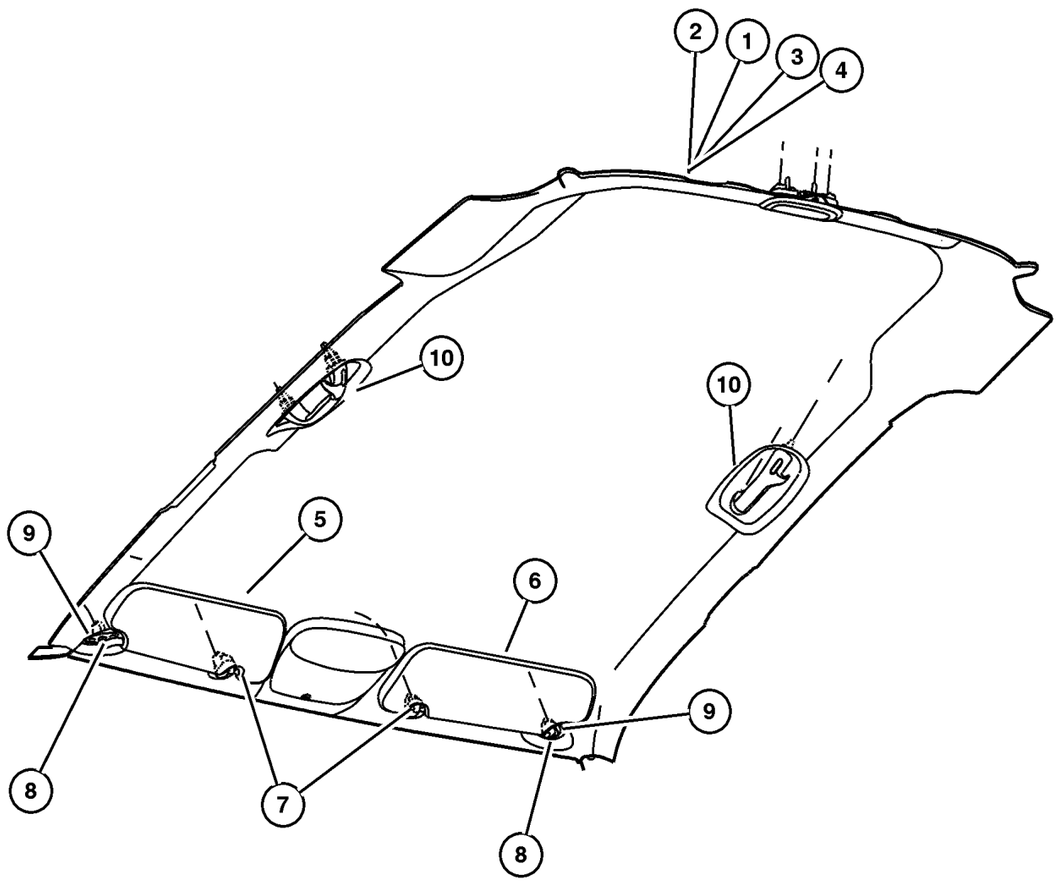

ITEM	PART NUMBER	QTY	LINE	SERIES	BODY	ENGINE	TRANS	TRIM	DESCRIPTION
Sales Codes:									
[AHM] = Convenience Group 1									
[CGS] = Side Air Bags									
[CUD] = Console, Mini Overhead									
[GNA] = Prismatic									
[GNK] = Electrochromic									
[GWA] = Power Sunroof									
[LSC] = Security Alarm									
[RSP] = Hands Free Communication									
1									HEADLINER, Without Sunroof [GWA]
	1AZ72 BD1AA	1	J, T					O0	With [AHM] Convenience Group 1, Without [CGS] Side Airbags,and [CUD] Overhead Console
	1AZ73 BD1AA	1	J, T					O0	With [AHM] Convenience Group 1, and [CUD] Overhead Console
	1AZ74 BD1AA	1	J, T					O0	With [AHM] Convenience Group 1, and [CUD] Overhead Console, [GNK] Auto Dim Mirror,[RSP] U-Connect Hands Free Comminication,Without [CGS] Side Air Bags.
	1AZ78 BD1AA	1	J, T					O0	Without [AHM] Convenience Group 1, [CUD] Overhead Console, With [CGS] Side Air Bags
	1AZ79 BD1AA	1	J, T					O0	With [AHM] Convenience Group 1, With [CGS] Side Air Bags, Without [CUD] Overhead Console
	1AZ80 BD1AA	1	J, T					O0	With [AHM] Convenience Group 1, With [CGS] Side Air Bags, With [CUD] Overhead Console
	1AZ81 BD1AA	1	J, T					O0	With [AHM] Convenience Group 1, With [CGS] Side Air Bags, With [CUD] Overhead Console, With [GNK] Auto Dim Mirror
	1AZ85 BD1AA	1	J, T					O0	With [AHM] Convenience Group 1, [CUD] Overhead Console, [GKN] Auto Dim Mirror, Without [CGS] Side Air Bags
	1AZ87 BD1AA	1	J, T					O0	With [AHM] Convenience Group 1, [CUD] Overhead Console, [GKN] Auto Dim Mirror,and [CGS] Side Air Bags
2									HEADLINER, With Sunroof [GWA]

2006 Liberty (KJ)

SERIES	LINE	BODY	ENGINE	TRANSMISSION
H =HIGHLINE	T =JEEP - 2WD	74 =SPORT UTILITY 4-DR	EKG=3.7L V6 Eng.	DG6=4-Spd. Auto. 42RLE Trans.
M =MEDIUM	J =JEEP - 4WD		ENR=2.8L 4 Cyl Turbo Diesel Eng.	DGV=4-Spd. Auto. VLP Trans.
P =PREMIUM	U =JEEP - 4WD (RHD)		ENJ=2.5L 4 Cyl 16V Turbo Diesel Eng.	DGQ=5-Spd Auto. 5-45RFE Trans.
			ED1=2.4L 4 Cyl DOHC 16v SMPI Eng.	DEH=6-Speed Man. NSG370 Trans.
				DDD=5-Speed HD Man. Trans.
				DDK=5-Speed HD Man. Trans.

Headliner and Visors
Figure IKJ-110

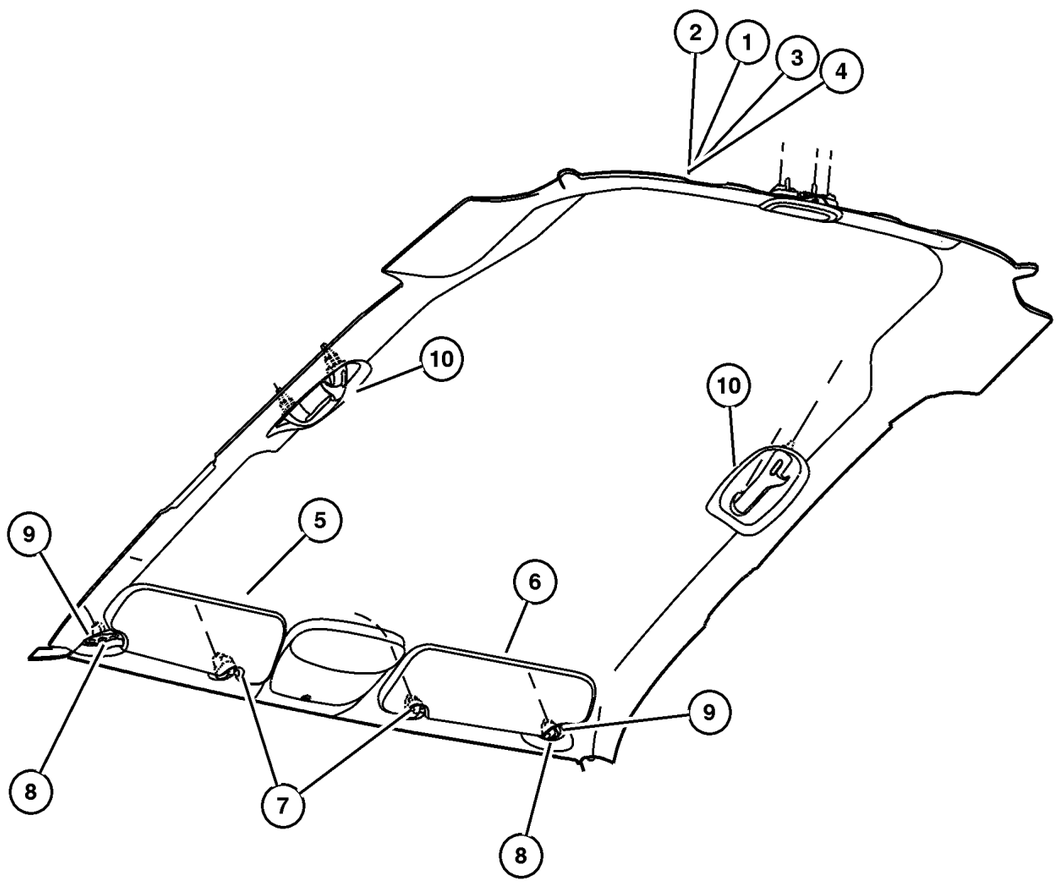

ITEM	PART NUMBER	QTY	LINE	SERIES	BODY	ENGINE	TRANS	TRIM	DESCRIPTION
	1AZ75 BD1AA	1	J, T					O0	Without [CUD] Overhead Console, and [CGS] Side Air Bags
	1AZ76 BD1AA	1	J, U					O0	With [CUD] Overhead Console Only
	1AZ77 BD1AA	1	J, T					O0	With [CUD] Overhead Console, [GKN] Auto Dim Mirror and [RSP] Hands Free Communication
	1AZ82 BD1AA	1	J, T					O0	Without [CUD] Overhead Console, and with [CGS] Side Air Bags
	1AZ83 BD1AA	1	J, U					O0	With [CUD] Overhead Console, [CGS] Side Air Bags, Without [GKN] Auto Dim Mirror
	1AZ84 BD1AA	1	J, T					O0	With [CUD] Overhead Console, [CGS] Side Air Bags,[GKN] Auto Dim Mirror, and [RSP] Hands Free Communication
	1AZ86 BD1AA	1	J, T					O0	With[CUD] Overhead Console, [GKN] Auto Dim Mirror, Without [CGS] Side Air Bags
	1AZ88 BD1AA	1	J, T					O0	With [CUD] Overhead Console, [GKN] Auto Dim Mirror,and [CGS] Side Air Bags
3									HEADLINER, Export, With Sunroof [GWA]
	1AZ90 BD1AA	1	J, U					O0	With [CGS] Side Air Bags, Without [CUD] Overhead Console
	1AZ93 BD1AA	1	J, U					O0	With [CGS] Side Air Bags, [CUS] Overhead Console and [GKN] Auto Dim Mirror
	1AZ98 BD1AA	1	J, U					O0	With [CGS] Side Air Bags,[CUD] Overhead Console, [LSC] Security Alarm,and [GNK] Auto Dim Mirror
	1AZ99 BD1AA	1	J, U					O0	With [CGS] Side Air Bags,[CUD] Overhead Console, [LSC] Security Alarm. Without [GNK] Auto Dim Mirror
	1BA02 BD1AA	1	J, U					O0	With [CUD] Overhead Console. [GNK] Auto Dim Mirror and [LSC] Security Alarm

2006 Liberty (KJ)

SERIES	LINE	BODY	ENGINE	TRANSMISSION
H =HIGHLINE	T =JEEP - 2WD	74 =SPORT UTILITY 4-DR	EKG=3.7L V6 Eng.	DG6=4-Spd. Auto. 42RLE Trans.
M =MEDIUM	J =JEEP - 4WD		ENR=2.8L 4 Cyl Turbo Diesel Eng.	DGV=4-Spd. Auto. VLP Trans.
P =PREMIUM	U =JEEP - 4WD (RHD)		ENJ=2.5L 4 Cyl 16V Turbo Diesel Eng.	DGQ=5-Spd Auto. 5-45RFE Trans.
			ED1=2.4L 4 Cyl DOHC 16v SMPI Eng.	DEH=6-Speed Man. NSG370 Trans.
				DDD=5-Speed HD Man. Trans.
				DDK=5-Speed HD Man. Trans.

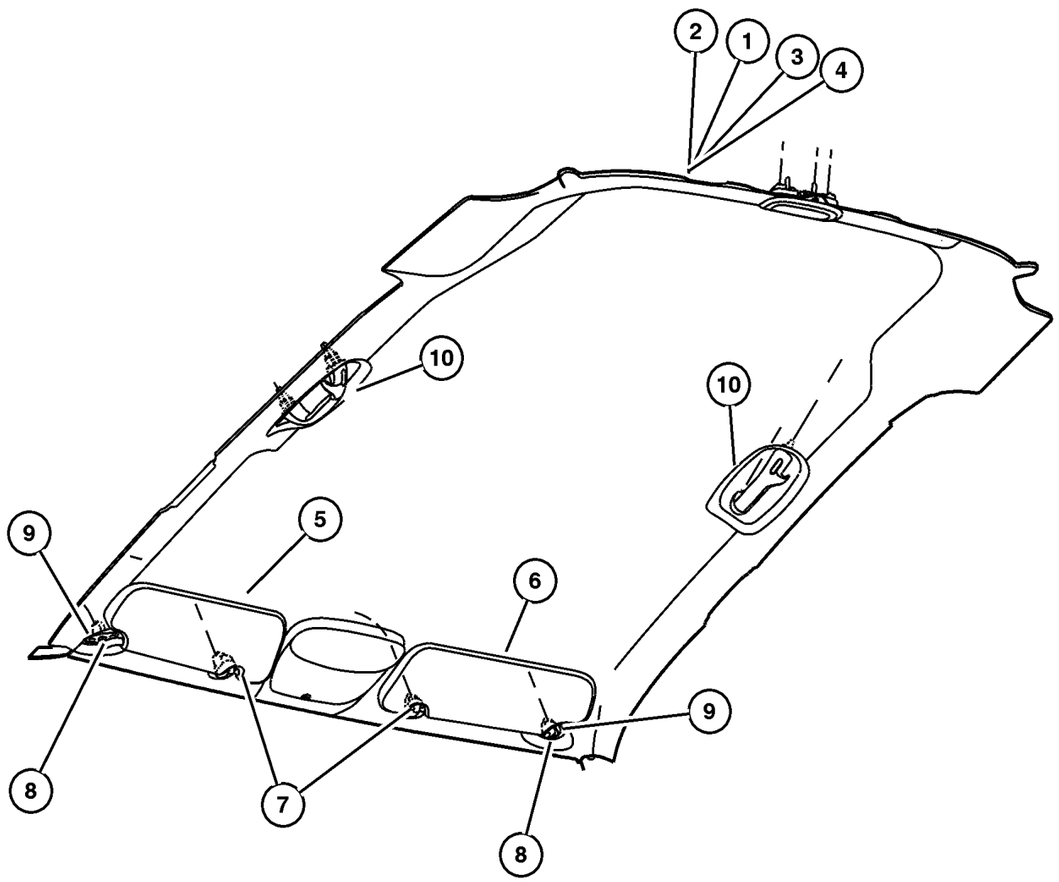

ITEM	PART NUMBER	QTY	LINE	SERIES	BODY	ENGINE	TRANS	TRIM	DESCRIPTION
	1BA03 BD1AA	1	J, U					O0	With [CUD] Overhead Console, [LSC] Security Alarm,Without [GKN] Auto Dim Mirror
	1BA05 BD1AA	1	J, U					O0	Without [CGS] Side Air Bags, and [CUD] Overhead Console
	1BA07 BD1AA	1	J, U					O0	With [CUD] Overhead Console, [GNK] Auto Dim Mirror, Without [LSC] Security Alarm
4									HEADLINER, Export, Without Sunroof [GWA]
	1AZ89 BD1AA	1	J, U					O0	With [CGS] Side Airbags, Without [CUD] Overhead Console
	1AZ92 BD1AA	1	J, U					O0	With [CGS] Side Air Bags, [CUD] Overhead Console, [GNK] Auto Dim Mirror,Without [LSC] Security Alarm
	1AZ94 BD1AA	1	J, U					O0	With]CGS] Side Air Bags, {CUD] Overhead Console, [GNK} Auto Dim Mirror and [LSC] Security Alarm
	1AZ96 BD1AA	1	J, U					O0	With [CUD] Overhead Console, [LSC] Security Alarm,[CGS] Side Air Bags, Without [GNK]Auto Dim Mirror
	1BA00 BD1AA	1	J, U					O0	With [CUD] Overhead Console, [GNK] Auto Dim Mirror, {LSC] Security Alarm, Without [CGS] Side Air Bags
	1BA01 BD1AA	1	J, U					O0	With [CUD] Overhead Console, [LSC] Security Alarm,Without [GKN] Auto Dim Mirror
	1BA04 BD1AA	1	J, U					O0	Without [CGS] Side Air Bags, and [CUD] Overhead Console
	1BA06 BD1AA	1	J, U					O0	With [CUD] Overhead Console, [GNK] auto Dim Mirror, Without [LSC] Security Alarm and [CGS] Side Air Bags
5									VISOR, Right
	5KF88 BD1AB	1	J, T					O0	Non-Illuminated
	5KF90 BD1AC	1	J, T					O0	Illuminated
6									VISOR, Left
	5KF89 BD1AB	1	J, T					O0	Non-Illuminated

2006 Liberty (KJ)

SERIES	LINE	BODY	ENGINE	TRANSMISSION
H =HIGHLINE	T =JEEP - 2WD	74 =SPORT UTILITY 4-DR	EKG=3.7L V6 Eng.	DG6=4-Spd. Auto. 42RLE Trans.
M =MEDIUM	J =JEEP - 4WD		ENR=2.8L 4 Cyl Turbo Diesel Eng.	DGV=4-Spd. Auto. VLP Trans.
P =PREMIUM	U =JEEP - 4WD (RHD)		ENJ=2.5L 4 Cyl 16V Turbo Diesel Eng.	DGQ=5-Spd Auto. 5-45RFE Trans.
			ED1=2.4L 4 Cyl DOHC 16v SMPI Eng.	DEH=6-Speed Man. NSG370 Trans.
				DDD=5-Speed HD Man. Trans.
				DDK=5-Speed HD Man. Trans.

Headliner and Visors
Figure IKJ-110

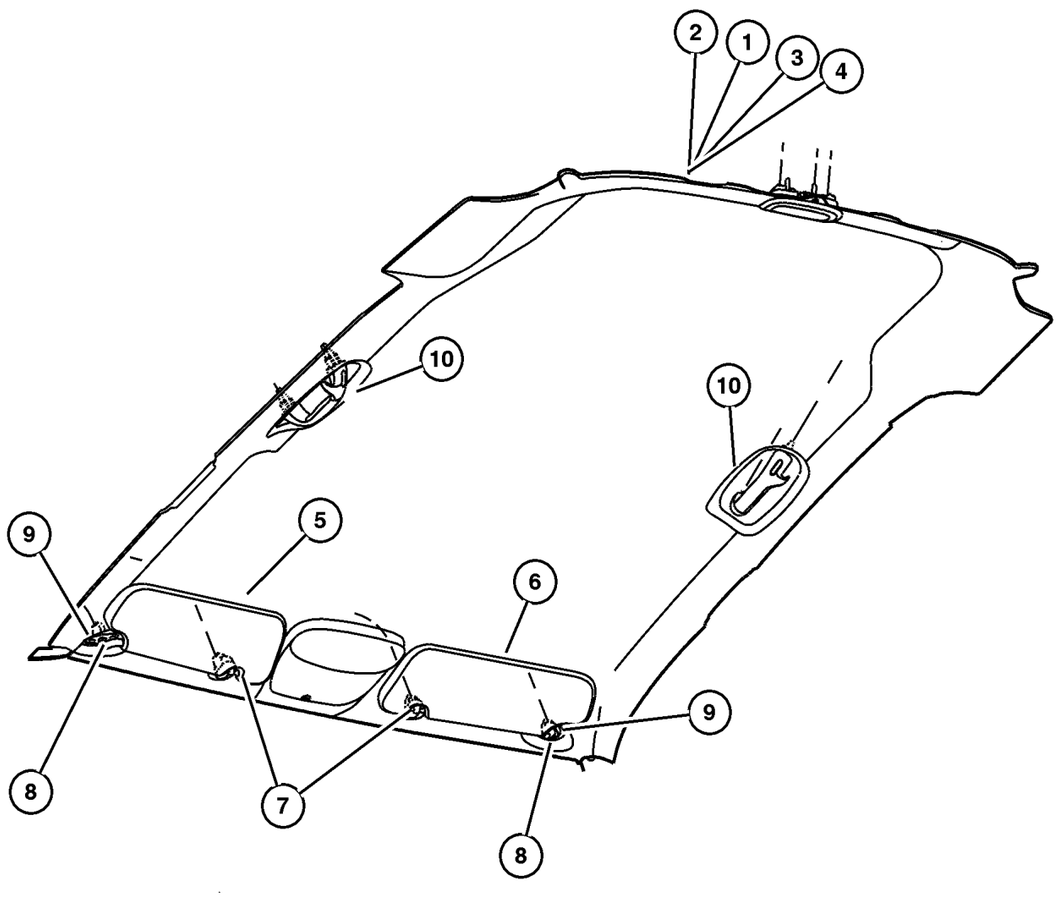

ITEM	PART NUMBER	QTY	LINE	SERIES	BODY	ENGINE	TRANS	TRIM	DESCRIPTION
	5KF91 BD1AC	1	J, T					O0	Illuminated
7									SUPPORT, Visor
	1AR26 BD1AA	2	J, T					O0	
		2	J, U					O0	
8									SPACER, Visor
	5140 534AA	2	J, U					O0	
		2	J, T					O0	
9	6034 912	4	J, T					O0	SCREW, Pan Head, .19-16x.75
10									HANDLE, Roof Grab
	UY68 BD1AA	1	J, T					O0	Right
		1	J, U					O0	Right
	UY69 BD1AA	1	J, U					O0	Left
		1	J, T					O0	Left
-11	5108 000AA-	2	J						LABEL, Air Bag Warning, CANADA ONLY
-12	55352 825AA-	1	J						LABEL, Warning, CANADA ONLY

2006 Liberty (KJ)

SERIES	LINE	BODY	ENGINE	TRANSMISSION
H =HIGHLINE	T =JEEP - 2WD	74 =SPORT UTILITY 4-DR	EKG=3.7L V6 Eng.	DG6=4-Spd. Auto. 42RLE Trans.
M =MEDIUM	J =JEEP - 4WD		ENR=2.8L 4 Cyl Turbo Diesel Eng.	DGV=4-Spd. Auto. VLP Trans.
P =PREMIUM	U =JEEP - 4WD (RHD)		ENJ=2.5L 4 Cyl 16V Turbo Diesel Eng.	DGQ=5-Spd Auto. 5-45RFE Trans.
			ED1=2.4L 4 Cyl DOHC 16v SMPI Eng.	DEH=6-Speed Man. NSG370 Trans.
				DDD=5-Speed HD Man. Trans.
				DDK=5-Speed HD Man. Trans.

Panels, Interior Trim, Front
Figure IKJ-210

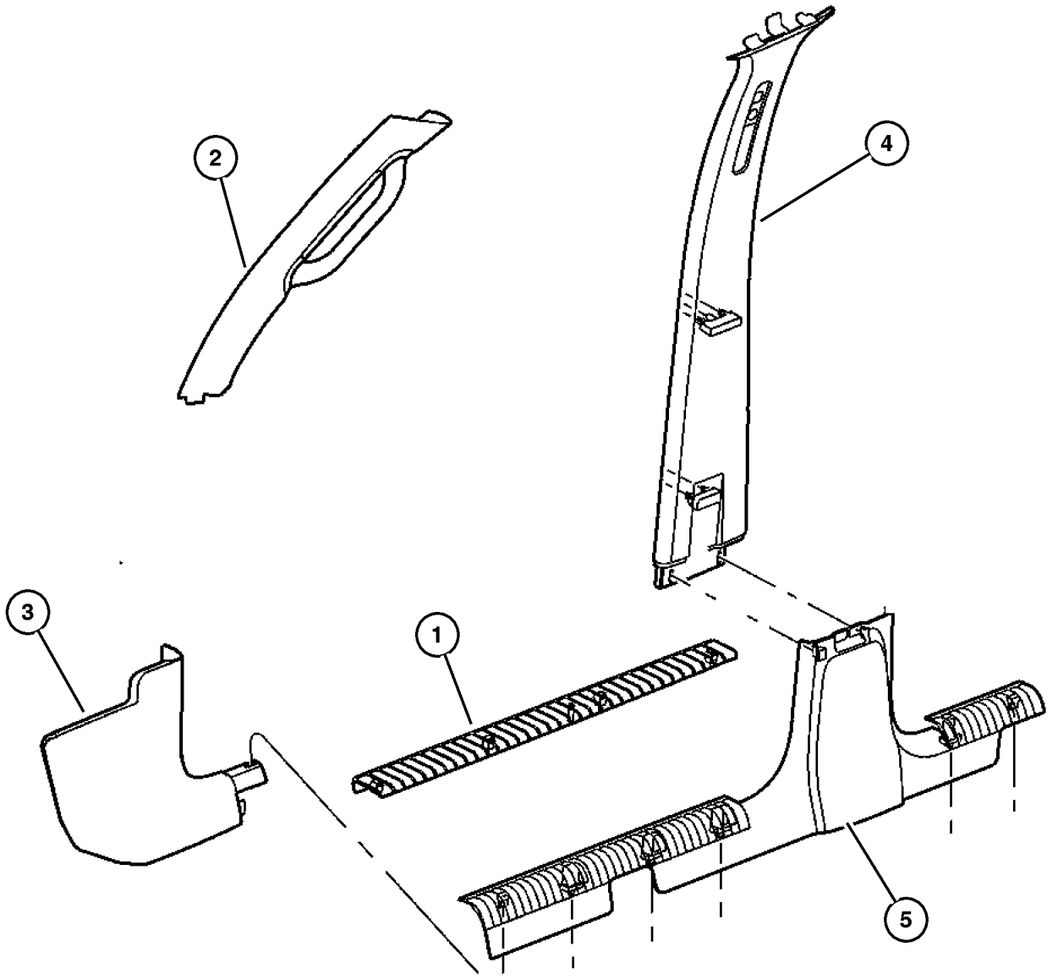

ITEM	PART NUMBER	QTY	LINE	SERIES	BODY	ENGINE	TRANS	TRIM	DESCRIPTION
1									PLATE, Scuff
	55352 778AC	1							Right Front
	55352 779AE	1							Left Front
2									PANEL, A Pillar Trim
	5GM92 BD1AI	1						O0	Right
	5GM93 BD1AI	1						O0	Left
3									PANEL, Cowl Side Trim
	5GE62 BD5AJ	1						O0	[DB, D5], Right
	5GE62 ZJ3AJ	1						O0	[J1, J3], Right
	5GE67 BD5AK	1						O0	[DB, D5], Left
	5GE67 ZJ3AK	1						O0	[J1, J3], Left
4									COVER, B Pillar Trim Panel
	5GE60 BD5AM	1						O0	[DB, D5], Right
	5GE60 ZJ3AM	1						O0	[J1, J3], Right
	5GE61 BD5AM	1						O0	[DB, D5], Left
	5GE61 ZJ3AM	1						O0	[J1, J3], Left
5									PANEL, Side Sill
	5GG22 BD5AL	1						O0	[DB, D5], Right
	5GG22 ZJ3AL	1						O0	[J1, J3], Right
	5GG23 BD5AM	1						O0	[DB, D5], Left
	5GG23 ZJ3AM	1						O0	[J1, J3], Left

2006 Liberty (KJ)

SERIES	LINE	BODY	ENGINE	TRANSMISSION
H =HIGHLINE	T =JEEP - 2WD	74 =SPORT UTILITY 4-DR	EKG=3.7L V6 Eng.	DG6=4-Spd. Auto. 42RLE Trans.
M =MEDIUM	J =JEEP - 4WD		ENR=2.8L 4 Cyl Turbo Diesel Eng.	DGV=4-Spd. Auto. VLP Trans.
P =PREMIUM	U =JEEP - 4WD (RHD)		ENJ=2.5L 4 Cyl 16V Turbo Diesel Eng.	DGQ=5-Spd Auto. 5-45RFE Trans.
			ED1=2.4L 4 Cyl DOHC 16v SMPI Eng.	DEH=6-Speed Man. NSG370 Trans.
				DDD=5-Speed HD Man. Trans.
				DDK=5-Speed HD Man. Trans.

Panels, Interior Trim, Rear
Figure IKJ-220

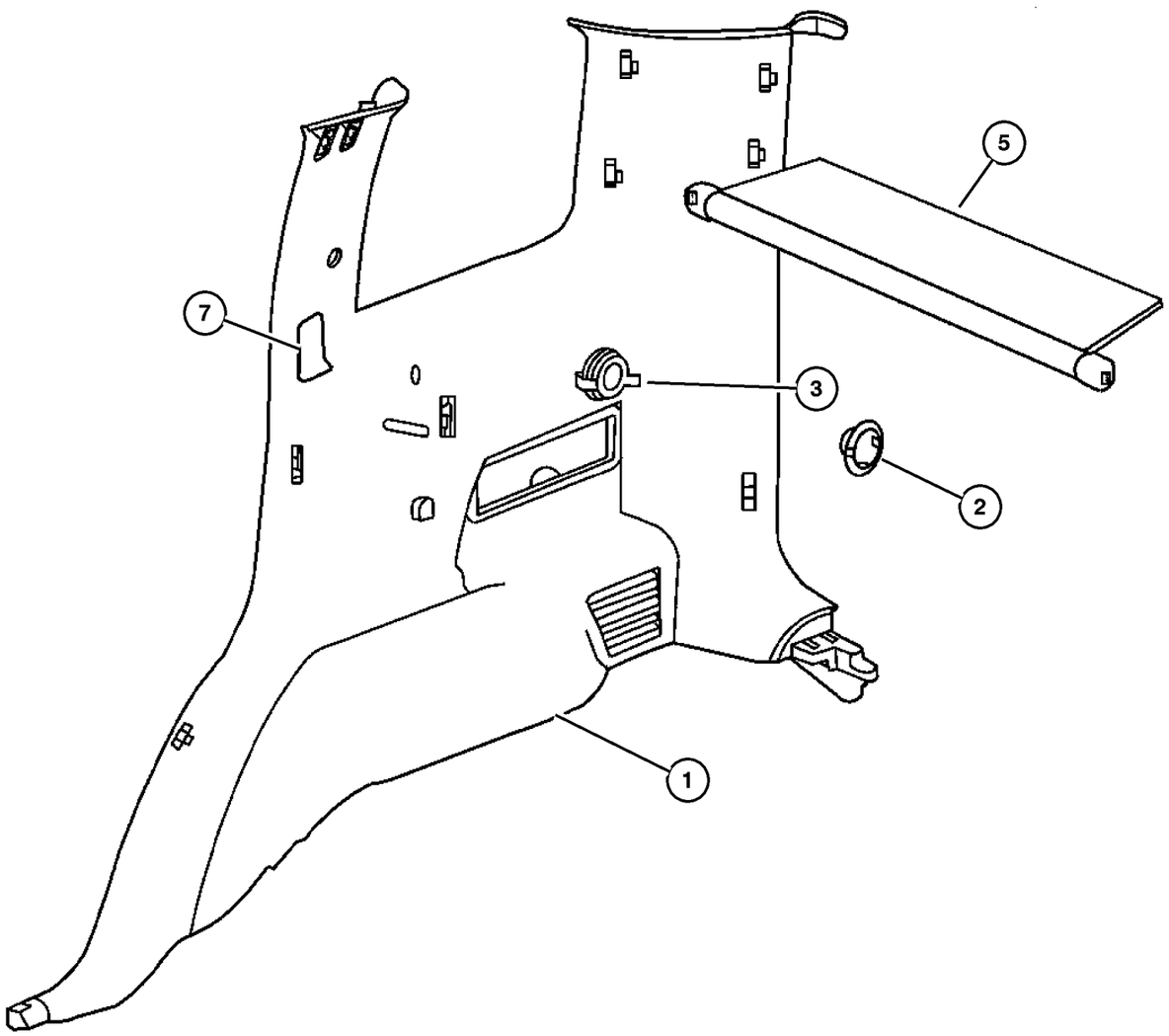

ITEM	PART NUMBER	QTY	LINE	SERIES	BODY	ENGINE	TRANS	TRIM	DESCRIPTION
1									PANEL, Quarter Trim
	5HG52 BD5AQ	1						O0	[DB, D5], Right
	5HG52 ZJ3AQ	1						O0	[J1, J3], Right
	5HG55 BD5AQ	1						O0	[DB, D5], With CD Changer Opening, Right
	5HG55 ZJ3AQ	1						O0	[J1, J3] , With CD Changer Opening, Right
	5HG56 BD5AQ	1						O0	[DB, D5], With Trim Panel Net, Right
	5HG56 ZJ3AQ	1						O0	[J1, J3], With Trim Panel Net, Right
	5HG57 BD5AR	1						O0	[DB, D5], Left
	5HG57 ZJ3AR	1						O0	[J1, J3], Left
2									PLUG, Quarter Trim Panel
	5HH32 BD5AA	1						O0	[DB, D5]
	5HH32 ZJ3AA	1						O0	[J1, J3]
3	4793 554AB	1						O0	POWER OUTLET
-4	4685 668AA-	1						O0	MOUNT, Power Outlet
5									COVER, Cargo Compartment
	5JM75 BD5AA	1						O0	[DB, D5]
	5JM75 ZJ3AA	1						O0	[J1, J3]
-6									BEZEL, interior trim, Surrounds [CD] Changer
	WL87 BD5AA-	1						O0	[DB, D5]
	WL87 ZJ3AA-	1						O0	[J1, J3]
7									COVER, C Pillar
	WR16 BD5AA	1						O0	[DB, D5], Right
	WR16 ZJ3AA	1						O0	[J1, J3], Right
	WR17 BD5AA	1						O0	[DB, D5], Left
	WR17 ZJ3AA	1						O0	[J1, J3], Left

2006 Liberty (KJ)

SERIES	LINE	BODY	ENGINE	TRANSMISSION
H =HIGHLINE	T =JEEP - 2WD	74 =SPORT UTILITY 4-DR	EKG=3.7L V6 Eng.	DG6=4-Spd. Auto. 42RLE Trans.
M =MEDIUM	J =JEEP - 4WD		ENR=2.8L 4 Cyl Turbo Diesel Eng.	DGV=4-Spd. Auto. VLP Trans.
P =PREMIUM	U =JEEP - 4WD (RHD)		ENJ=2.5L 4 Cyl 16V Turbo Diesel Eng.	DGQ=5-Spd Auto. 5-45RFE Trans.
			ED1=2.4L 4 Cyl DOHC 16v SMPI Eng.	DEH=6-Speed Man. NSG370 Trans.
				DDD=5-Speed HD Man. Trans.
				DDK=5-Speed HD Man. Trans.

Carpets and Mats
Figure IKJ-310

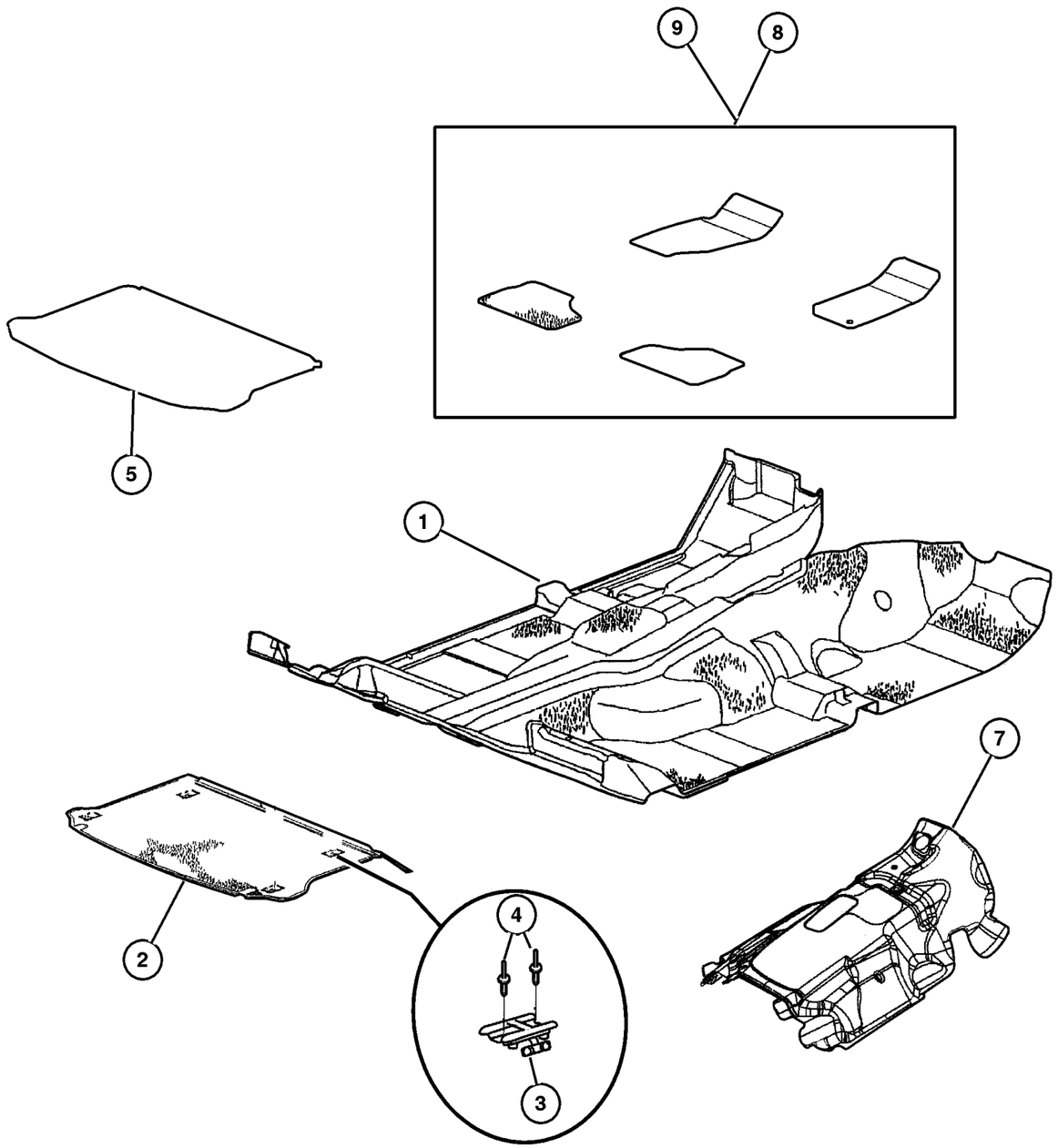

ITEM	PART NUMBER	QTY	LINE	SERIES	BODY	ENGINE	TRANS	TRIM	DESCRIPTION
1									CARPET, Front Floor
	5GF86 XDHAK	1	U					O0	[DB,D5]
	5GF86 ZJ8AK	1	U					O0	[J1,J3]
	5KL21 XDHAC	1	U					O0	[DB, D5], With Turbo Diesel
	5KL21 ZJ8AC	1	U					O0	[J1, J3], With Turbo Diesel
	5JH18 ZJ8AF	1	J, T					O0	[J1,J3]
	5JH18 XDHAF	1	J, T					O0	[DB,D5]
	5KL20 XDHAD	1	J, T					O0	[DB, D5], With Turbo Diesel
	5KL20 ZJ8AD	1	J, T					O0	[J1, J3], With Turbo Diesel
2									CARPET, Cargo Floor, Includes Cargo Tie Down Hooks
	5GF79 XDHAG	1						O0	[DB, D5]
	5GF79 ZJ8AG	1						O0	[J1, J3]
3	5086 138AA	1						O0	LOOP, Cargo Tie Down
4	6036 484AA	8							RIVET, Blind Bulb, Open
5	8220 6761	1							MAT KIT, Bed - Interior, One piece mat folds at rear seat and flexes with seats when layed flat or in up position.
-6									CLIP, Floor Mat Retention
	5086 365AA-	1	U					O0	
		1	J, T					O0	
7	55352 864AC	1							PAD, Tunnel
8									MAT KIT, Floor, Carpeted
	5JQ61 XDHAA	1	J, T					O0	[DB, D5]
	5JQ61 ZJ8AA	1	J, T					O0	[J1, J3]
	5JQ96 XDHAA	1	U					O0	[DB, D5]
	5JQ96 ZJ8AA	1	U					O0	[J1, J3]
9									MAT KIT, Floor - Complete
	8220 9244	1	J, T						Slush, Slate
	8220 9245	1	J, T						Slush, Dark Khaki

2006 Liberty (KJ)

SERIES	LINE	BODY	ENGINE	TRANSMISSION
H =HIGHLINE	T =JEEP - 2WD	74 =SPORT UTILITY 4-DR	EKG=3.7L V6 Eng.	DG6=4-Spd. Auto. 42RLE Trans.
M =MEDIUM	J =JEEP - 4WD		ENR=2.8L 4 Cyl Turbo Diesel Eng.	DGV=4-Spd. Auto. VLP Trans.
P =PREMIUM	U =JEEP - 4WD (RHD)		ENJ=2.5L 4 Cyl 16V Turbo Diesel Eng.	DGQ=5-Spd Auto. 5-45RFE Trans.
			ED1=2.4L 4 Cyl DOHC 16v SMPI Eng.	DEH=6-Speed Man. NSG370 Trans.
				DDD=5-Speed HD Man. Trans.
				DDK=5-Speed HD Man. Trans.

Cargo Organizer
Figure IKJ-320

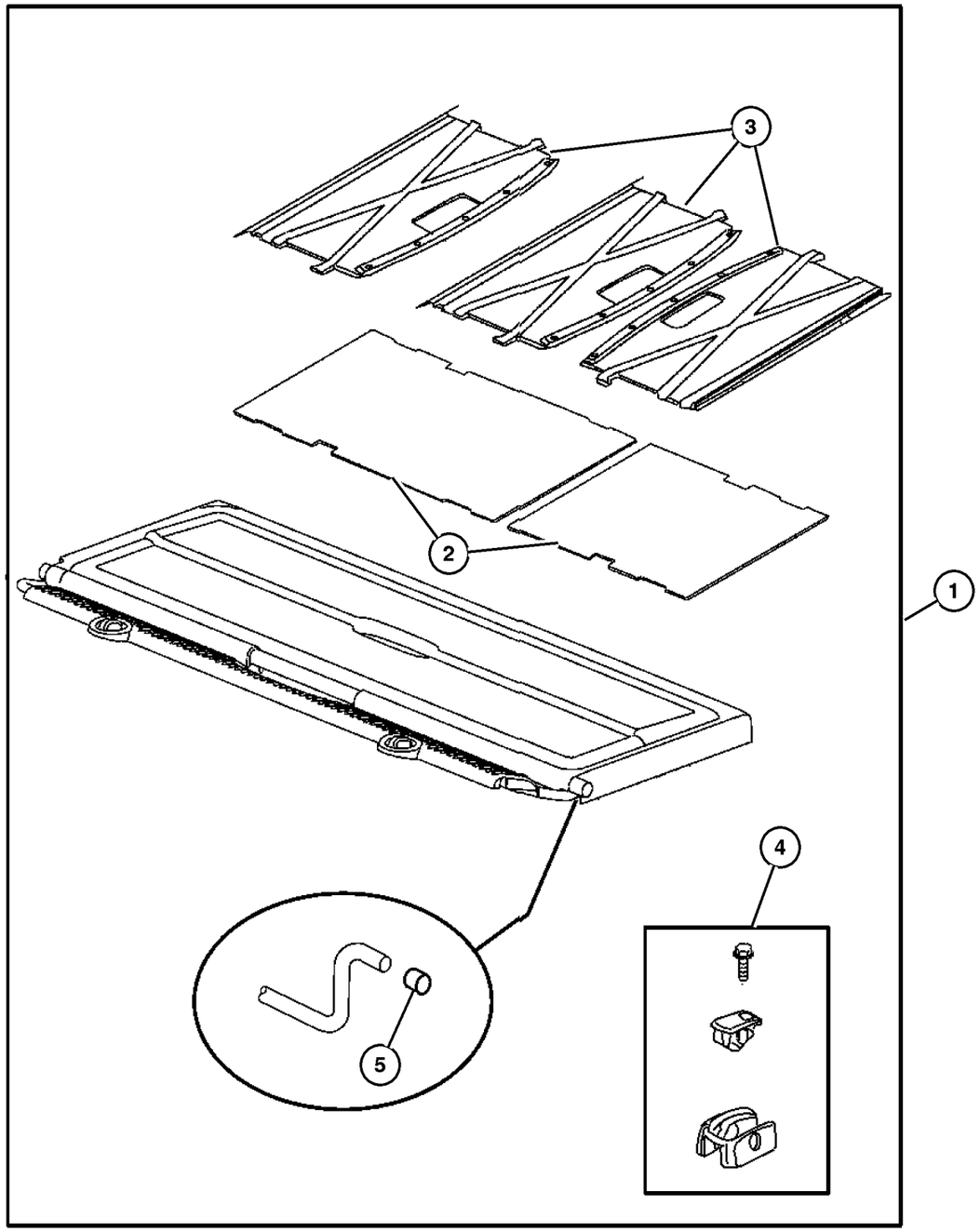

ITEM	PART NUMBER	QTY	LINE	SERIES	BODY	ENGINE	TRANS	TRIM	DESCRIPTION
1									ORGANIZER, CARGO
	5JK49 1D5AF	1						O0	[DB, D5]
	5JK49 1J3AF	1						O0	[J1, J3]
2	5114 524AA	1						O0	MAT, Storage Tray
3									PARTITION, Cargo, Includes Anti-Rattle Tape
	ZF43 1D5AA	1						O0	[DB,D5]
	ZF43 1J3AA	1						O0	[J1,J3]
4	5114 585AA	1						O0	MOUNT KIT
5	5114 584AA	1						O0	CAP, Rubber

2006 Liberty (KJ)

SERIES	LINE	BODY	ENGINE	TRANSMISSION
H =HIGHLINE	T =JEEP - 2WD	74 =SPORT UTILITY 4-DR	EKG=3.7L V6 Eng.	DG6=4-Spd. Auto. 42RLE Trans.
M =MEDIUM	J =JEEP - 4WD		ENR=2.8L 4 Cyl Turbo Diesel Eng.	DGV=4-Spd. Auto. VLP Trans.
P =PREMIUM	U =JEEP - 4WD (RHD)		ENJ=2.5L 4 Cyl 16V Turbo Diesel Eng.	DGQ=5-Spd Auto. 5-45RFE Trans.
			ED1=2.4L 4 Cyl DOHC 16v SMPI Eng.	DEH=6-Speed Man. NSG370 Trans.
				DDD=5-Speed HD Man. Trans.
				DDK=5-Speed HD Man. Trans.

Trim Panel, Front Door
Figure IKJ-410

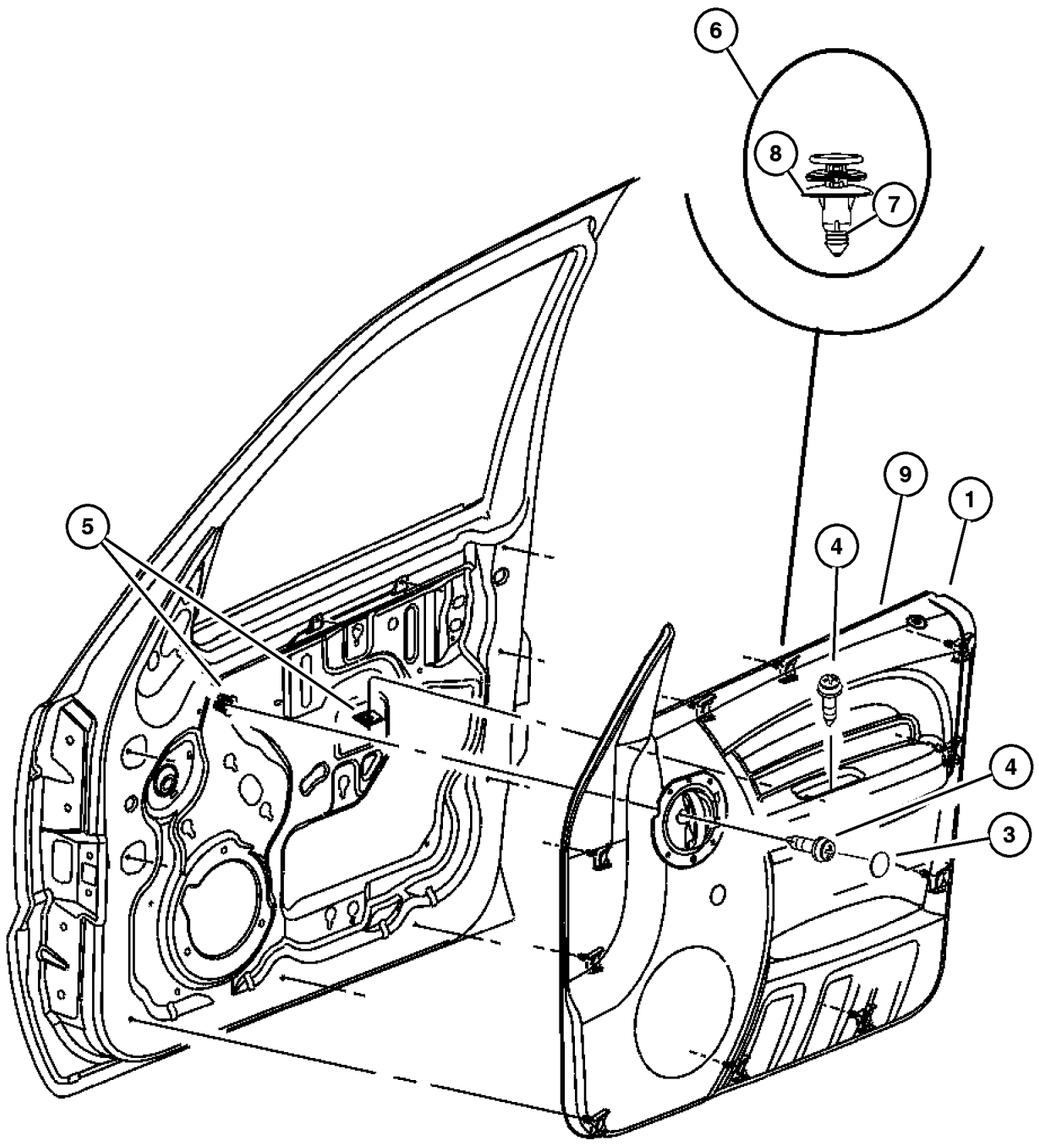

ITEM	PART NUMBER	QTY	LINE	SERIES	BODY	ENGINE	TRANS	TRIM	DESCRIPTION
Sales Codes:									
[CBF] = Premium Cloth Bolster, Bright Door Handle									
[CTC] = Leather									
[CTL] = Base, Cloth Bolster, Color Keyed Door Handle									
[CTM] = Deluxe									
1									PANEL, Front Door Trim, Includes Door Handle and Clips
	1BU08 1D1AA	1	J, T					O0	[J1], With Sales Code [CTM], Right
	1BU08 1D5AA	1	J, T					O0	[D5], With Sales Code [CTM], Right
	1BU08 1DBAA	1	J, T					O0	[DB], With Sales Code [CTM], Right
	1BU08 1J3AA	1	J, T					O0	[J3], With Sales Code [CTM], Right
	1BU09 1D1AA	1	J, T					O0	[J1], With Sales Code [CTM], Left
	1BU09 1D5AA	1	J, T					O0	[D5], With Sales Code [CTM], Left
	1BU09 1DBAA	1	J, T					O0	[DB], With Sales Code [CTM], Left
	1BU09 1J3AA	1	J, T					O0	[J3], With Sales Code [CTM], Left
	1BU10 1D1AA	1	J, T					O0	[J1], With Sales Code [CTM], With Turbo Diesel, Right
	1BU10 1D5AA	1	J, T					O0	[D5], With Sales Code [CTM], With Turbo Diesel, Right
	1BU10 1DBAA	1	J, T					O0	[DB], With Sales Code [CTM], With Turbo Diesel, Right
	1BU10 1J3AA	1	J, T					O0	[J3], With Sales Code [CTM], With Turbo Diesel, Right
	1BU11 1D1AA	1	J, T					O0	[J1], With Sales Code [CTM], With Turbo Diesel, Left
	1BU11 1D5AA	1	J, T					O0	[D5], With Sales Code [CTM], With Turbo Diesel, Left
	1BU11 1DBAA	1	J, T					O0	[DB], With Sales Code [CTM], With Turbo Diesel, Left
	1BU11 1J3AA	1	J, T					O0	[J3], With Sales Code [CTM], With Turbo Diesel, Left
	1BU12 1D1AA	1	U					O0	[J1], With Sales Code [CTM], Right Hand Drive, Right,Export
	1BU12 1D5AA	1	U					O0	[D5], With Sales Code [CTM], Right Hand Drive, Right,Export
	1BU12 1DBAA	1	U					O0	[DB], With Sales Code [CTM], Right Hand Drive, Right,Export
	1BU12 1J3AA	1	U					O0	[J3], With Sales Code [CTM], Right Hand Drive, Right,Export

2006 Liberty (KJ)

SERIES	LINE	BODY	ENGINE	TRANSMISSION
H =HIGHLINE	T =JEEP - 2WD	74 =SPORT UTILITY 4-DR	EKG=3.7L V6 Eng.	DG6=4-Spd. Auto. 42RLE Trans.
M =MEDIUM	J =JEEP - 4WD		ENR=2.8L 4 Cyl Turbo Diesel Eng.	DGV=4-Spd. Auto. VLP Trans.
P =PREMIUM	U =JEEP - 4WD (RHD)		ENJ=2.5L 4 Cyl 16V Turbo Diesel Eng.	DGQ=5-Spd Auto. 5-45RFE Trans.
			ED1=2.4L 4 Cyl DOHC 16v SMPI Eng.	DEH=6-Speed Man. NSG370 Trans.
				DDD=5-Speed HD Man. Trans.
				DDK=5-Speed HD Man. Trans.

Trim Panel, Front Door
Figure IKJ-410

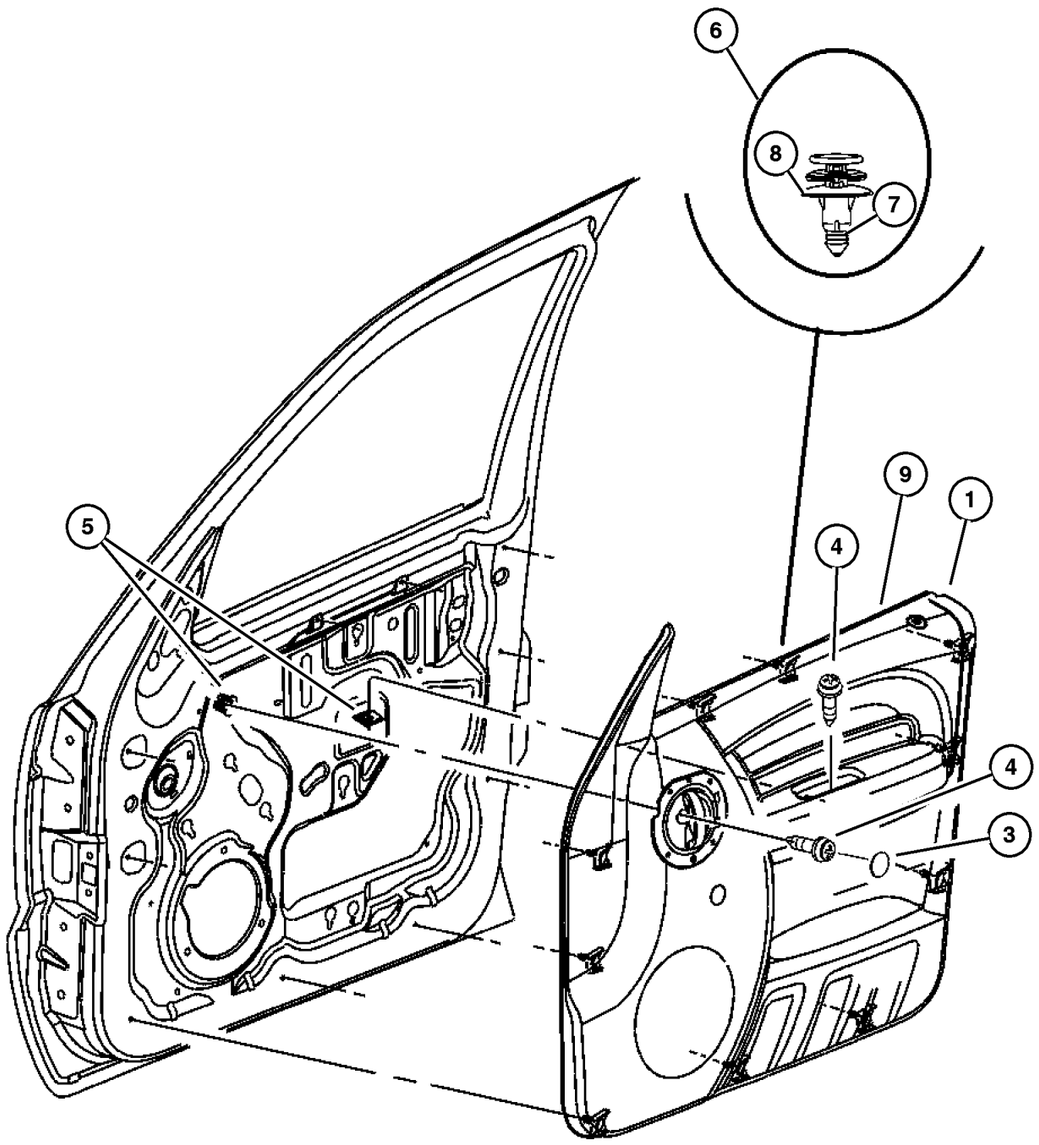

ITEM	PART NUMBER	QTY	LINE	SERIES	BODY	ENGINE	TRANS	TRIM	DESCRIPTION
	1BU13 1D1AA	1	U					O0	[J1], With Sales Code [CTM], Right Hand Drive, Left,Export
	1BU13 1D5AA	1	U					O0	[D5], With Sales Code [CTM], Right Hand Drive, Left,Export
	1BU13 1DBAA	1	U					O0	[DB], With Sales Code [CTM], Right Hand Drive, Left,Export
	1BU13 1J3AA	1	U					O0	[J3], With Sales Code [CTM], Right Hand Drive, Left,Export
	YB42 BD5AA	1	J, T					O0	[D5],With Sales Code [CTL], Right
	YB42 ZJ3AA	1	J, T					O0	[J3],With Sales Code [CTL], Right
	YB43 BD5AA	1	J, T					O0	[D5],With Sales Code [CTL], Left
	YB43 ZJ3AA	1	J, T					O0	[J3],With Sales Code [CTL], Left
	YC06 BD5AA	1	U					O0	[D5],With Sales Code [CTL],Right Hand Drive, Right
	YC06 ZJ3AA	1	U					O0	[J3],With Sales Code [CTL],Right Hand Drive, Right
	YC07 BD5AA	1	U					O0	[D5],With Sales Code [CTL],Right Hand Drive, Left
	YC07 ZJ3AA	1	U					O0	[J3],With Sales Code [CTL],Right Hand Drive, Left
	1AE10 1D1AA	1	J, T					O0	[J1],With Sales Code [CBF or CTC], Right
	1AE10 1D5AA	1	J, T					O0	[D5],With Sales Code [CBF or CTC], Right
	1AE10 1DBAA	1	J, T					O0	[DB],With Sales Code [CBF or CTC], Right
	1AE10 1J3AA	1	J, T					O0	[J3],With Sales Code [CBF or CTC], Right
	1AE11 1D1AA	1	J, T					O0	[J1],With Sales Code [CBF or CTC], Left
	1AE11 1D5AA	1	J, T					O0	[D5],With Sales Code [CBF or CTC], Left
	1AE11 1DBAA	1	J, T					O0	[DB],With Sales Code [CBF or CTC], Left
	1AE11 1J3AA	1	J, T					O0	[J3],With Sales Code [CBF or CTC], Left
	1AE12 1D1AA	1	U					O0	[J1],With Sales Code [CBF or CTC],Righr Hand Drive, Right
	1AE12 1D5AA	1	U					O0	[D5],With Sales Code [CBF or CTC],Right Hand Drive, Right
	1AE12 1DBAA	1	U					O0	[DB],With Sales Code [CBF or CTC],Right Hand Drive, Right

2006 Liberty (KJ)

SERIES	LINE	BODY	ENGINE	TRANSMISSION
H =HIGHLINE	T =JEEP - 2WD	74 =SPORT UTILITY 4-DR	EKG=3.7L V6 Eng.	DG6=4-Spd. Auto. 42RLE Trans.
M =MEDIUM	J =JEEP - 4WD		ENR=2.8L 4 Cyl Turbo Diesel Eng.	DGV=4-Spd. Auto. VLP Trans.
P =PREMIUM	U =JEEP - 4WD (RHD)		ENJ=2.5L 4 Cyl 16V Turbo Diesel Eng.	DGQ=5-Spd Auto. 5-45RFE Trans.
			ED1=2.4L 4 Cyl DOHC 16v SMPI Eng.	DEH=6-Speed Man. NSG370 Trans.
				DDD=5-Speed HD Man. Trans.
				DDK=5-Speed HD Man. Trans.

Trim Panel, Front Door
Figure IKJ-410

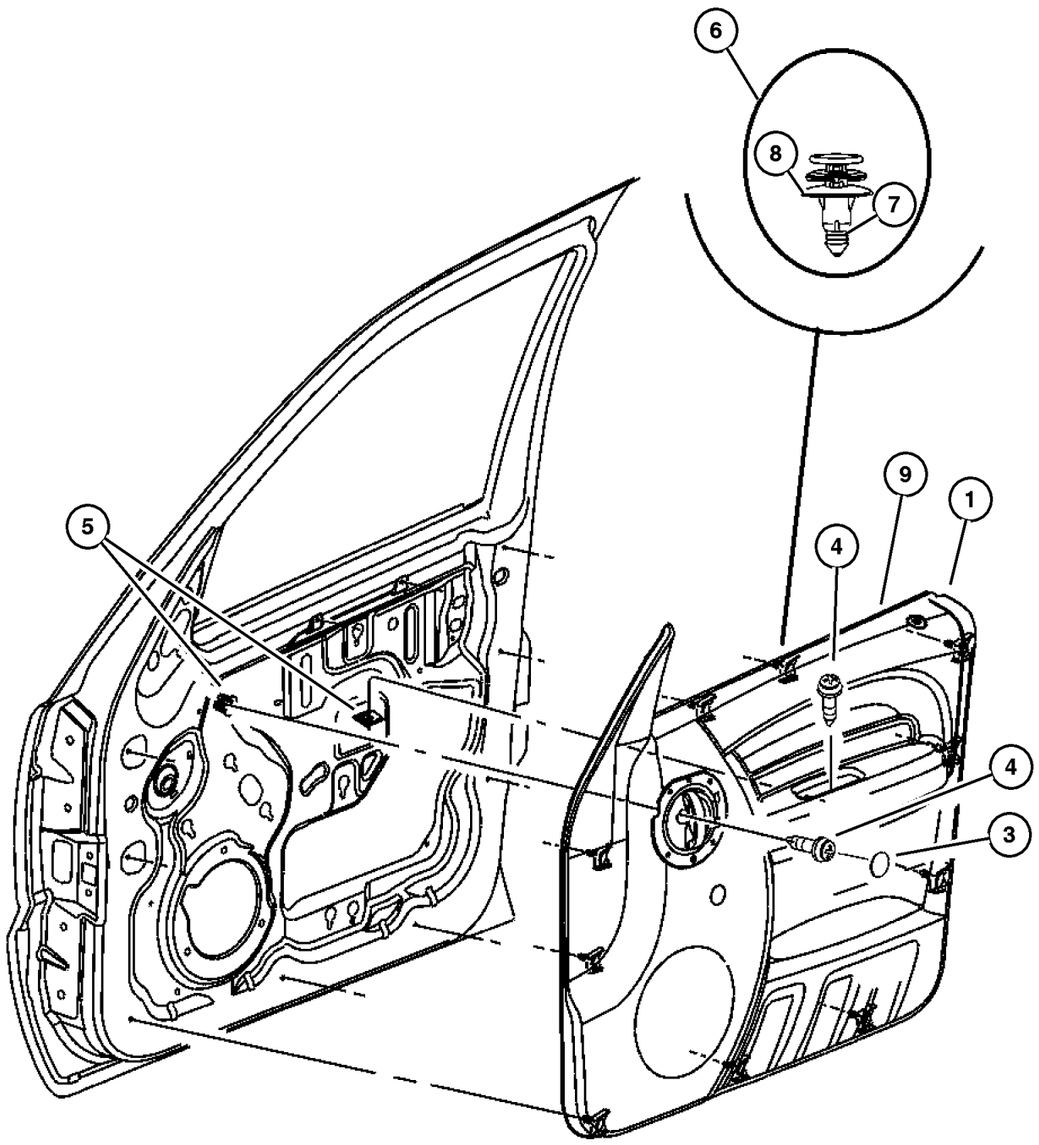

ITEM	PART NUMBER	QTY	LINE	SERIES	BODY	ENGINE	TRANS	TRIM	DESCRIPTION
	1AE12 1J3AA	1	U					O0	[J3],With Sales Code [CBF or
	1AE13 1D1AA	1	U					O0	CTC],Right Hand Drive, Right [J1],With Sales Code [CBF or
	1AE13 1D5AA	1	U					O0	CTC],Righr Hand Drive, Left [D5],With Sales Code [CBF or
	1AE13 1DBAA	1	U					O0	CTC],Right Hand Drive, Left [DB],With Sales Code [CBF or
	1AE13 1J3AA	1	U					O0	CTC],Right Hand Drive, Left [J3],With Sales Code [CBF or
	1BA56 BD5AA	1	J, T					O0	CTC],Right Hand Drive, Left [D5],With Sales Code [CTL],With
	1BA56 ZJ3AA	1	J, T					O0	Turbo Diesel, Right [J3],With Sales Code [CTL],With
	1BA57 BD5AA	1	J, T					O0	Turbo Diesel, Right [D5],With Sales Code [CTL],With
	1BA57 ZJ3AA	1	J, T					O0	Turbo Diesel, Left [J3],With Sales Code [CTL],With
	1BA58 1D1AA	1	J, T					O0	Turbo Diesel, Left [J1],With Sales Code [CBF or
	1BA58 1D5AA	1	J, T					O0	CTC],With Turbo Diesel, Right [D5],With Sales Code [CBF or
	1BA58 1DBAA	1	J, T					O0	CTC],With Turbo Diesel, Right [DB],With Sales Code [CBF or
	1BA58 1J3AA	1	J, T					O0	CTC],With Turbo Diesel, Right [J3],With Sales Code [CBF or
	1BA59 1D1AA	1	J, T					O0	CTC],With Turbo Diesel, Right [J1],With Sales Code [CBF or
	1BA59 1D5AA	1	J, T					O0	CTC],With Turbo Diesel, Left [D5],With Sales Code [CBF or
	1BA59 1DBAA	1	J, T					O0	CTC],With Turbo Diesel, Left [DB],With Sales Code [CBF or
	1BA59 1J3AA	1	J, T					O0	CTC],With Turbo Diesel, Left [J3],With Sales Code [CBF or
-2	4658 676	2						O0	CTC],With Turbo Diesel, Left CLIP, Latch Link
3	5GY30 BD5AA	2						O0	PLUG, Door Trim Panel [DB, D5]
	5GY30 ZJ3AA	2						O0	[J1, J3]
4									SCREW, .164-18x1.00, (NOT SERVICED) (Not Serviced)
5	6504 993AA	2							NUT
6	55116 997AB	9						O0	RETAINER, Trim Panel, Grommet and Pin

2006 Liberty (KJ)

SERIES	LINE	BODY	ENGINE	TRANSMISSION
H =HIGHLINE	T =JEEP - 2WD	74 =SPORT UTILITY 4-DR	EKG=3.7L V6 Eng.	DG6=4-Spd. Auto. 42RLE Trans.
M =MEDIUM	J =JEEP - 4WD		ENR=2.8L 4 Cyl Turbo Diesel Eng.	DGV=4-Spd. Auto. VLP Trans.
P =PREMIUM	U =JEEP - 4WD (RHD)		ENJ=2.5L 4 Cyl 16V Turbo Diesel Eng.	DGQ=5-Spd Auto. 5-45RFE Trans.
			ED1=2.4L 4 Cyl DOHC 16v SMPI Eng.	DEH=6-Speed Man. NSG370 Trans.
				DDD=5-Speed HD Man. Trans.
				DDK=5-Speed HD Man. Trans.

AR = Use as required - = Non illustrated part # = New this model year

September 20, 2005

Trim Panel, Front Door
Figure IKJ-410

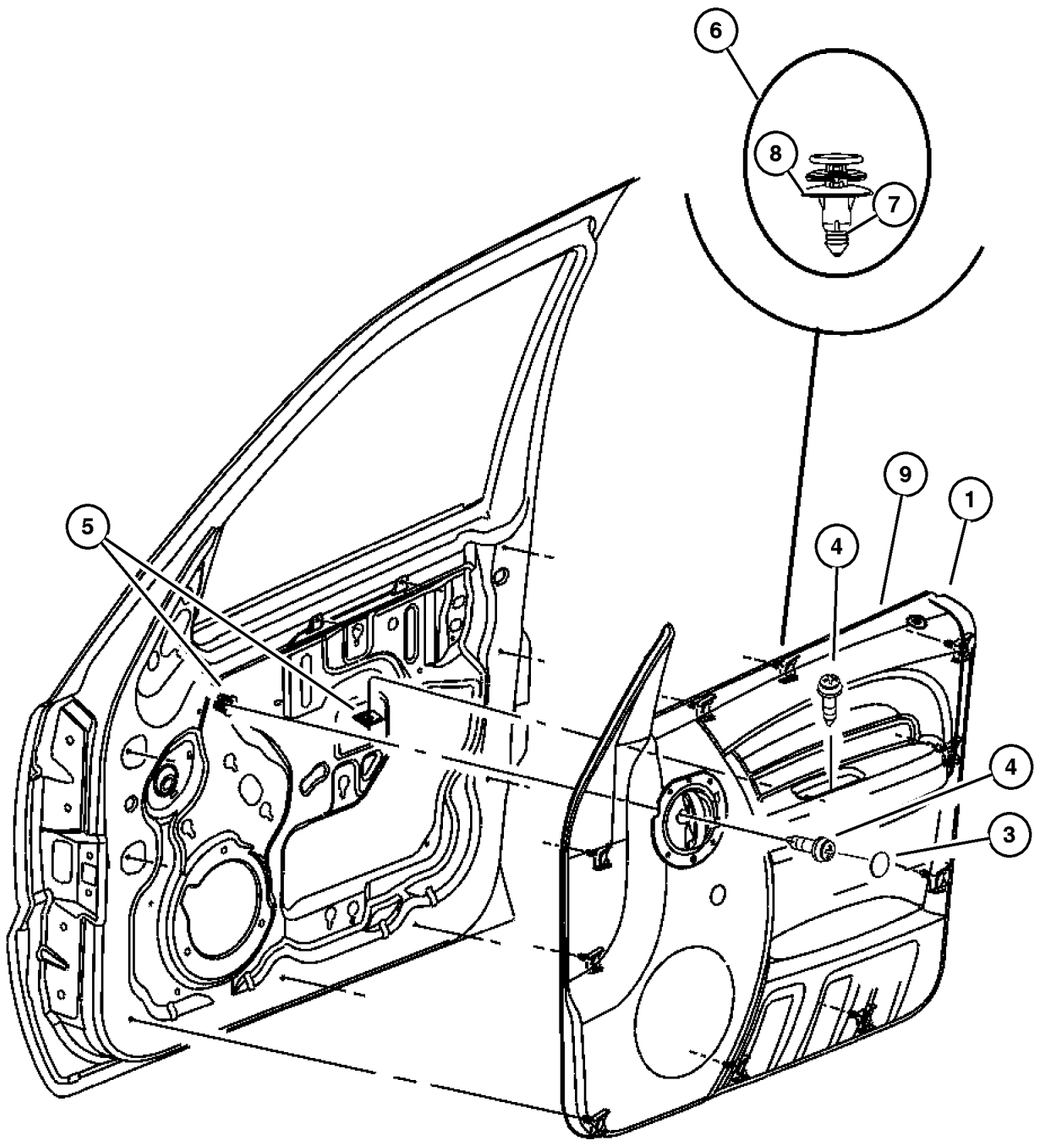

ITEM	PART NUMBER	QTY	LINE	SERIES	BODY	ENGINE	TRANS	TRIM	DESCRIPTION
7	5023 174AA	9						O0	PIN, Push, Also serviced with 5023173AA
8	5023 175AA	9						O0	GROMMET, Also serviced with 5023173AA
9	55235 878AC	1	J, T					O0	WEATHERSTRIP, Door Belt Moulding

2006 Liberty (KJ)

SERIES	LINE	BODY	ENGINE	TRANSMISSION
H =HIGHLINE	T =JEEP - 2WD	74 =SPORT UTILITY 4-DR	EKG=3.7L V6 Eng.	DG6=4-Spd. Auto. 42RLE Trans.
M =MEDIUM	J =JEEP - 4WD		ENR=2.8L 4 Cyl Turbo Diesel Eng.	DGV=4-Spd. Auto. VLP Trans.
P =PREMIUM	U =JEEP - 4WD (RHD)		ENJ=2.5L 4 Cyl 16V Turbo Diesel Eng.	DGQ=5-Spd Auto. 5-45RFE Trans.
			ED1=2.4L 4 Cyl DOHC 16v SMPI Eng.	DEH=6-Speed Man. NSG370 Trans.
				DDD=5-Speed HD Man. Trans.
				DDK=5-Speed HD Man. Trans.

Trim Panel, Rear Door
Figure IKJ-420

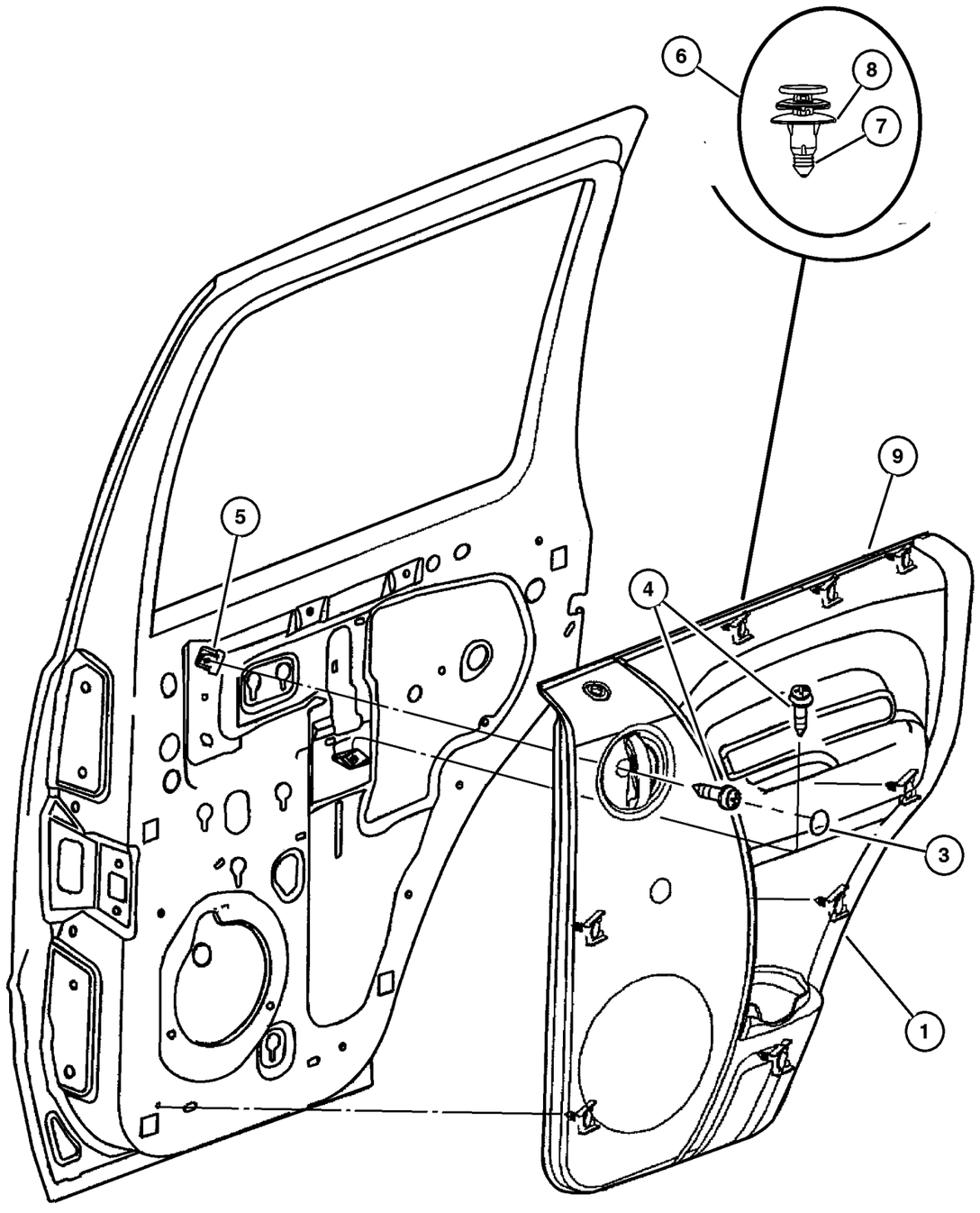

ITEM	PART NUMBER	QTY	LINE	SERIES	BODY	ENGINE	TRANS	TRIM	DESCRIPTION
Sales Codes:									
[CBF] = Premium Vinyl Bolster, Bright Door Handle									
[CTC] = Leather									
[CTL] = Base, Vinyl Bolster, Color Keyed Door Handle									
[CTM] = Deluxe									
1									PANEL, Rear Door Trim, Includes Door Handle
	5GF18 BD5AU	1						O0	[D5], With Sales Code [CTL], Right
	5GF18 ZJ3AU	1						O0	[J3], With Sales Code [CTL], Right
	5GF19 BD5AU	1						O0	[D5], With Sales Code [CTL], Left
	5GF19 ZJ3AU	1						O0	[J3], With Sales Code [CTL], Left
	5GF20 1D1AV	1						O0	[J1], With Sales Codes [CBF], [CTC], [CTM], Right
	5GF20 1D5AV	1						O0	[DB, D5], With Sales Codes [CBF], [CTC], [CTM], Right
	5GF20 1J3AV	1						O0	[J3], With Sales Codes [CBF], [CTC], [CTM], Right
	5GF21 1D1AV	1						O0	[J1], With Sales Codes [CBF], [CTC], [CTM], Left
	5GF21 1D5AV	1						O0	[DB, D5], With Sales Codes [CBF], [CTC], [CTM], Left
	5GF21 1J3AV	1						O0	[J3], With Sales Codes [CBF], [CTC], [CTM], Left
-2	4658 676	2						O0	CLIP, Latch Link, Also serviced with the Door Panel
3									PLUG, Door Trim Panel
	5GY30 BD5AA	2						O0	[DB, D5]
	5GY30 ZJ3AA	2						O0	[J1, J3]
4									SCREW, .164-18x1.00, (NOT SERVICED) (Not Serviced)
5	6504 993AA	2							NUT
6	55116 997AB	9						O0	RETAINER, Trim Panel, Grommet and Pin
7	5023 174AA	9						O0	PIN, Push, Also serviced with 5023713AA
8	5023 175AA	9						O0	GROMMET, Also serviced with 5023713AA
9									WEATHERSTRIP, Door Belt Moulding
	55235 886AC	1						O0	Right

2006 Liberty (KJ)

SERIES	LINE	BODY	ENGINE	TRANSMISSION
H =HIGHLINE	T =JEEP - 2WD	74 =SPORT UTILITY 4-DR	EKG=3.7L V6 Eng.	DG6=4-Spd. Auto. 42RLE Trans.
M =MEDIUM	J =JEEP - 4WD		ENR=2.8L 4 Cyl Turbo Diesel Eng.	DGV=4-Spd. Auto. VLP Trans.
P =PREMIUM	U =JEEP - 4WD (RHD)		ENJ=2.5L 4 Cyl 16V Turbo Diesel Eng.	DGQ=5-Spd Auto. 5-45RFE Trans.
			ED1=2.4L 4 Cyl DOHC 16v SMPI Eng.	DEH=6-Speed Man. NSG370 Trans.
				DDD=5-Speed HD Man. Trans.
				DDK=5-Speed HD Man. Trans.

Trim Panel, Rear Door
Figure IKJ-420

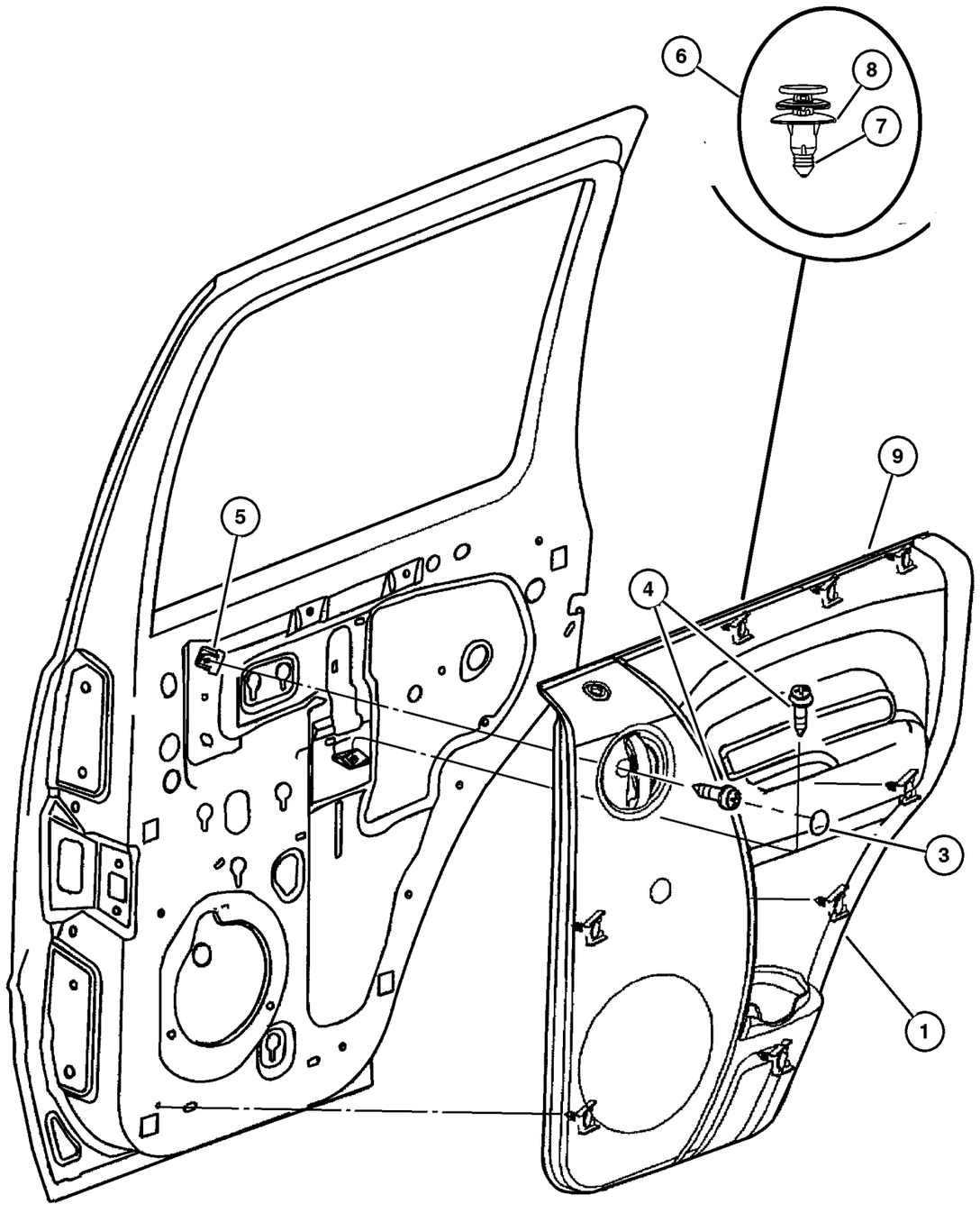

ITEM	PART NUMBER	QTY	LINE	SERIES	BODY	ENGINE	TRANS	TRIM	DESCRIPTION
	55235 887AC	1						O0	Left

2006 Liberty (KJ)

SERIES	LINE	BODY	ENGINE	TRANSMISSION
H =HIGHLINE	T =JEEP - 2WD	74 =SPORT UTILITY 4-DR	EKG=3.7L V6 Eng.	DG6=4-Spd. Auto. 42RLE Trans.
M =MEDIUM	J =JEEP - 4WD		ENR=2.8L 4 Cyl Turbo Diesel Eng.	DGV=4-Spd. Auto. VLP Trans.
P =PREMIUM	U =JEEP - 4WD (RHD)		ENJ=2.5L 4 Cyl 16V Turbo Diesel Eng.	DGQ=5-Spd Auto. 5-45RFE Trans.
			ED1=2.4L 4 Cyl DOHC 16v SMPI Eng.	DEH=6-Speed Man. NSG370 Trans.
				DDD=5-Speed HD Man. Trans.
				DDK=5-Speed HD Man. Trans.

Front Seat, Leather, Low Back, Trim Code [DL]
Figure IKJ-510

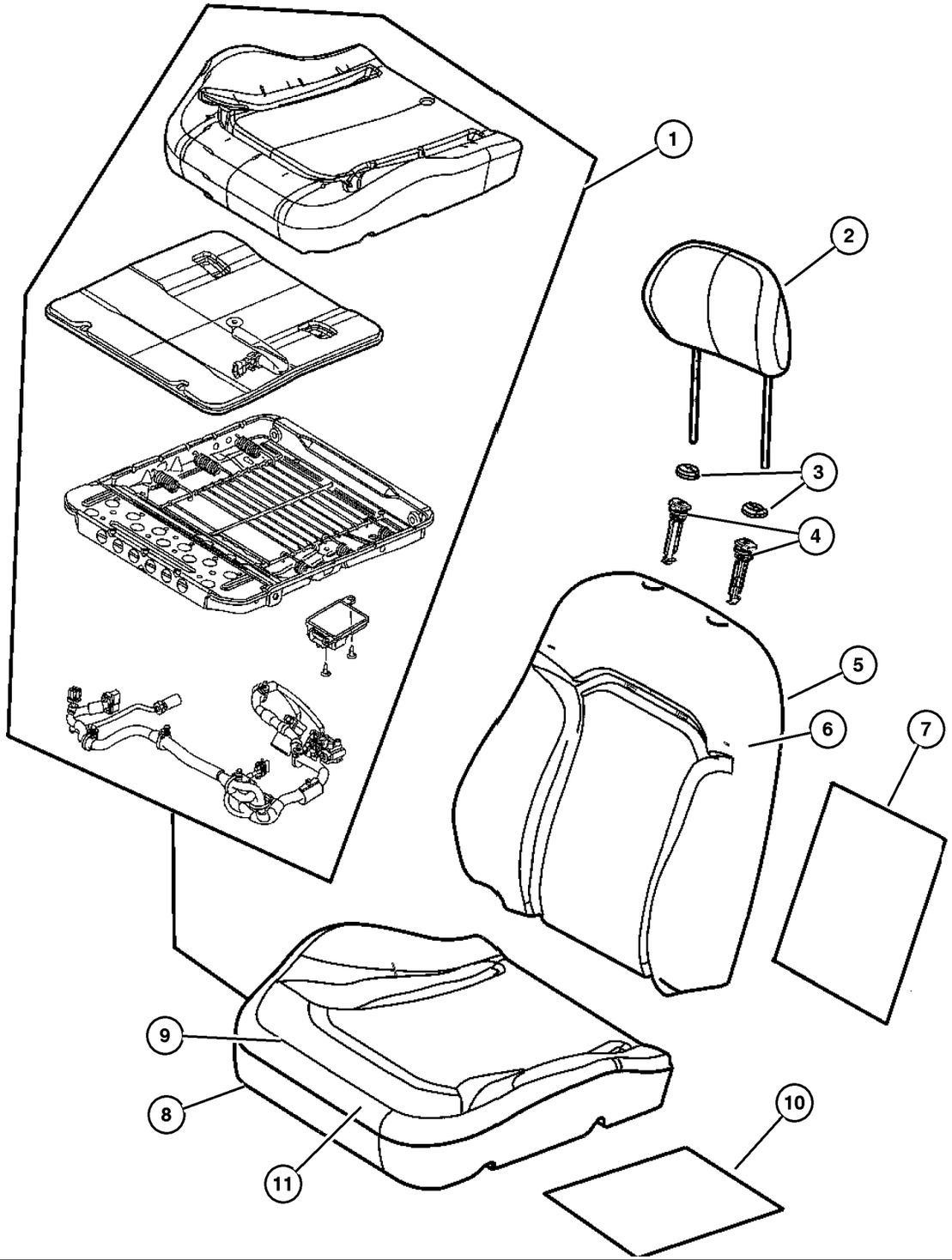

ITEM	PART NUMBER	QTY	LINE	SERIES	BODY	ENGINE	TRANS	TRIM	DESCRIPTION
Note; For United States/Canada vehicles only, if right side Cushion Foam is needed order Bladder Repair Kit. Do not attempt to replace the right side Cushion Foam separately as it may interfere with the calibration of the Occupant Classification System.									
1									BLADDER REPAIR KIT, Occupant Classification System, See Note, Right Side Only
	5142 934AA	1	J, T					DL	With Non-Heated Seat, Right Side Only
	5142 935AA	1	J, T					DL	With Heated Seat, Right Side Only
2									HEADREST, Front
	1BB65 1D1AA	2	J, T					DL	[J1]
	1BB65 1DBAA	2	J, T					DL	[DB]
	1BB65 1D1AA	2	J, U					DL	[J1]
	1BB65 1DBAA	2	J, U					DL	[DB]
3									CAP, Headrest Adjuster
	WA49 1DBAA	1	J, T					DL	[DB]. With Button
	WA49 1D1AA	1	J, T					DL	[J1], With Button
	WA50 1DBAA	1	J, T					DL	[DB],Without Button
	WA50 1D1AA	1	J, T					DL	[J1], Without Button
	WA49 1DBAA	1	J, U					DL	[DB]. With Button, Export
	WA49 1D1AA	1	J, U					DL	[J1], With Button, Export
	WA50 1DBAA	1	J, U					DL	[DB],Without Button, Export
	WA50 1D1AA	1	J, U					DL	[J1], Without Button, Export
4									SLEEVE, Headrest
	5066 563AA	2	J, T					DL	
		2	J, U					DL	
5									BACK, Front Seat
	1BB54 1D1AA	1	J, T					DL	[J1], Non-Heated, Right
	1BB54 1DBAA	1	J, T					DL	[DB]. Non-Heated, Right
	1BB55 1D1AA	1	J, T					DL	[J1], Non-Heated, Left
	1BB55 1DBAA	1	J, T					DL	[DB]. Non-Heated, Left
	1BB56 1D1AA	1	J, T					DL	[J1], Heated, Right
	1BB56 1DBAA	1	J, T					DL	[DB], Heated, Right
	1BB57 1D1AA	1	J, T					DL	[J1], Heated, Left
	1BB57 1DBAA	1	J, T					DL	[DB], Heated, Left
	1BB54 1D1AA	1	J, U					DL	[J1], Non-Heated, Right
	1BB54 1DBAA	1	J, U					DL	[DB]. Non-Heated, Right
	1BB55 1D1AA	1	J, U					DL	[J1], Non-Heated, Left
	1BB55 1DBAA	1	J, U					DL	[DB]. Non-Heated, Left
	1BB56 1D1AA	1	J, U					DL	[J1], Heated, Right
	1BB56 1DBAA	1	J, U					DL	[DB], Heated, Right
	1BB57 1D1AA	1	J, U					DL	[J1], Heated, Left

2006 Liberty (KJ)

SERIES	LINE	BODY	ENGINE	TRANSMISSION
H =HIGHLINE	T =JEEP - 2WD	74 =SPORT UTILITY 4-DR	EKG=3.7L V6 Eng.	DG6=4-Spd. Auto. 42RLE Trans.
M =MEDIUM	J =JEEP - 4WD		ENR=2.8L 4 Cyl Turbo Diesel Eng.	DGV=4-Spd. Auto. VLP Trans.
P =PREMIUM	U =JEEP - 4WD (RHD)		ENJ=2.5L 4 Cyl 16V Turbo Diesel Eng.	DGQ=5-Spd Auto. 5-45RFE Trans.
			ED1=2.4L 4 Cyl DOHC 16v SMPI Eng.	DEH=6-Speed Man. NSG370 Trans.
				DDD=5-Speed HD Man. Trans.
				DDK=5-Speed HD Man. Trans.

Front Seat, Leather, Low Back, Trim Code [DL]
Figure IKJ-510

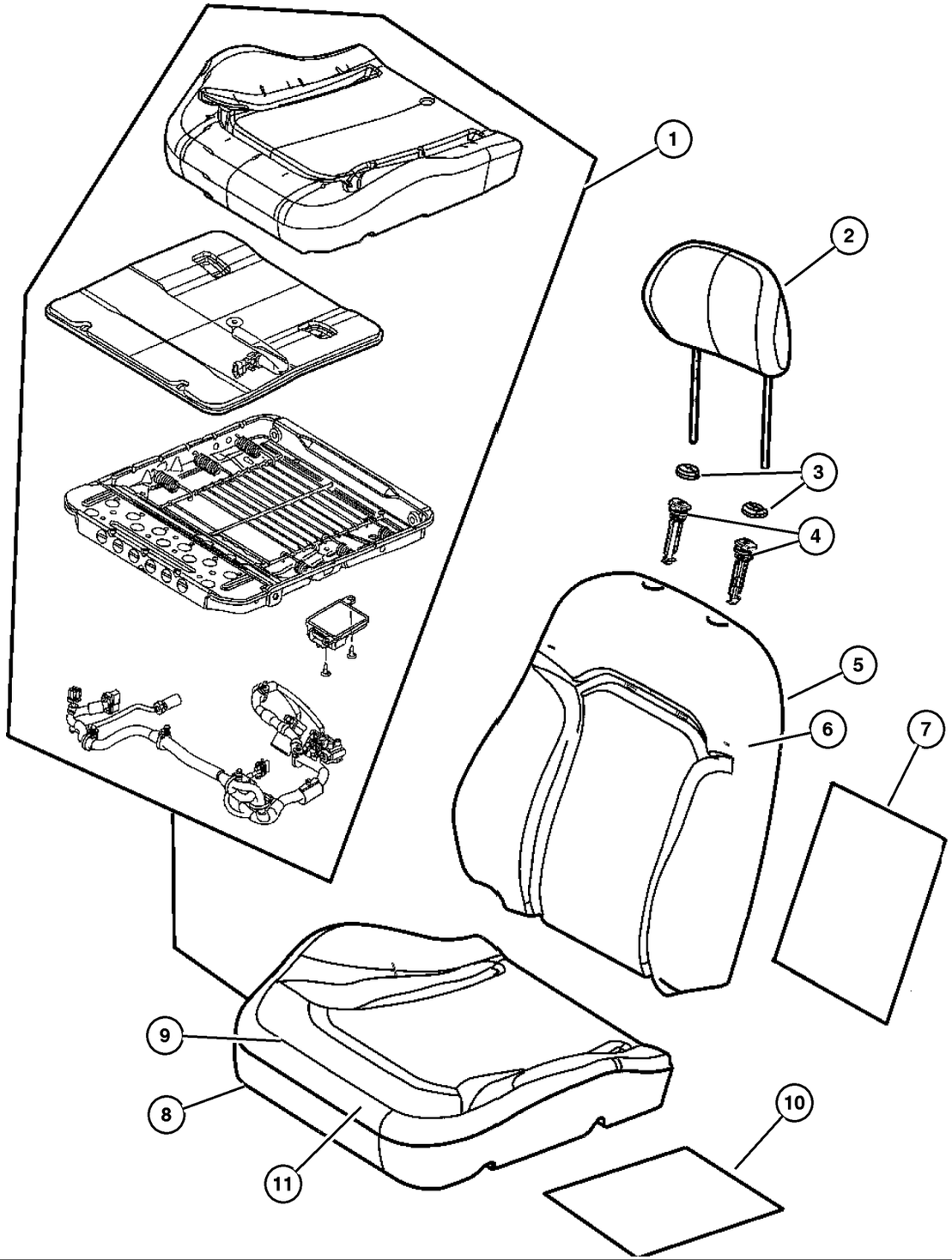

ITEM	PART NUMBER	QTY	LINE	SERIES	BODY	ENGINE	TRANS	TRIM	DESCRIPTION
	1BB57 1DBAA	1	J, U					DL	[DB], Heated, Left
6									COVER, Front Seat Back
	1BB52 1D1AA	1	J, T					DL	[J1], Right
	1BB52 1DBAA	1	J, T					DL	[BD], Right
	1BB53 1D1AA	1	J, T					DL	[J1], Left
	1BB53 1DBAA	1	J, T					DL	[BD], Left
	1BB52 1D1AA	1	J, U					DL	[J1], Right
	1BB52 1DBAA	1	J, U					DL	[BD], Right
	1BB53 1D1AA	1	J, U					DL	[J1], Left
	1BB53 1DBAA	1	J, U					DL	[BD], Left
7									PAD, Heater, Back
	5142 762AA	1	J, T					DL	Back
		1	J, U					DL	Back
8									FRAME, Front Seat Cushion
	5126 322AA	1	J, T					DL	Right
	5126 323AA	1	J, T					DL	Left
	5126 322AA	1	J, U					DL	Right
	5126 323AA	1	J, U					DL	Left
9									COVER, Front Seat Cushion
	1BB50 1D1AA	1	J, T					DL	[J1], Right
	1BB50 1DBAA	1	J, T					DL	[DB], Right
	1BB51 1D1AA	1	J, T					DL	[J1], Left
	1BB51 1DBAA	1	J, T					DL	[DB], Left
	1BB50 1D1AA	1	J, U					DL	[J1], Right
	1BB50 1DBAA	1	J, U					DL	[DB], Right
	1BB51 1D1AA	1	J, U					DL	[J1], Left
	1BB51 1DBAA	1	J, U					DL	[DB], Left
10									PAD, Heater, Cushion
	5142 763AA	2	J, T					DL	
		2	J, U					DL	
11									FOAM, Seat Cushion
	5142 748AA	2	J, T					DL	
		2	J, U					DL	
-12									WIRE KIT, Trimming
	5093 977AA-	2	J, T					DL	
		2	J, U					DL	

2006 Liberty (KJ)

SERIES	LINE	BODY	ENGINE	TRANSMISSION
H =HIGHLINE	T =JEEP - 2WD	74 =SPORT UTILITY 4-DR	EKG=3.7L V6 Eng.	DG6=4-Spd. Auto. 42RLE Trans.
M =MEDIUM	J =JEEP - 4WD		ENR=2.8L 4 Cyl Turbo Diesel Eng.	DGV=4-Spd. Auto. VLP Trans.
P =PREMIUM	U =JEEP - 4WD (RHD)		ENJ=2.5L 4 Cyl 16V Turbo Diesel Eng.	DGQ=5-Spd Auto. 5-45RFE Trans.
			ED1=2.4L 4 Cyl DOHC 16v SMPI Eng.	DEH=6-Speed Man. NSG370 Trans.
				DDD=5-Speed HD Man. Trans.
				DDK=5-Speed HD Man. Trans.

Front Seat, Cloth, High Back, Trim Code [N5]
Figure IKJ-520

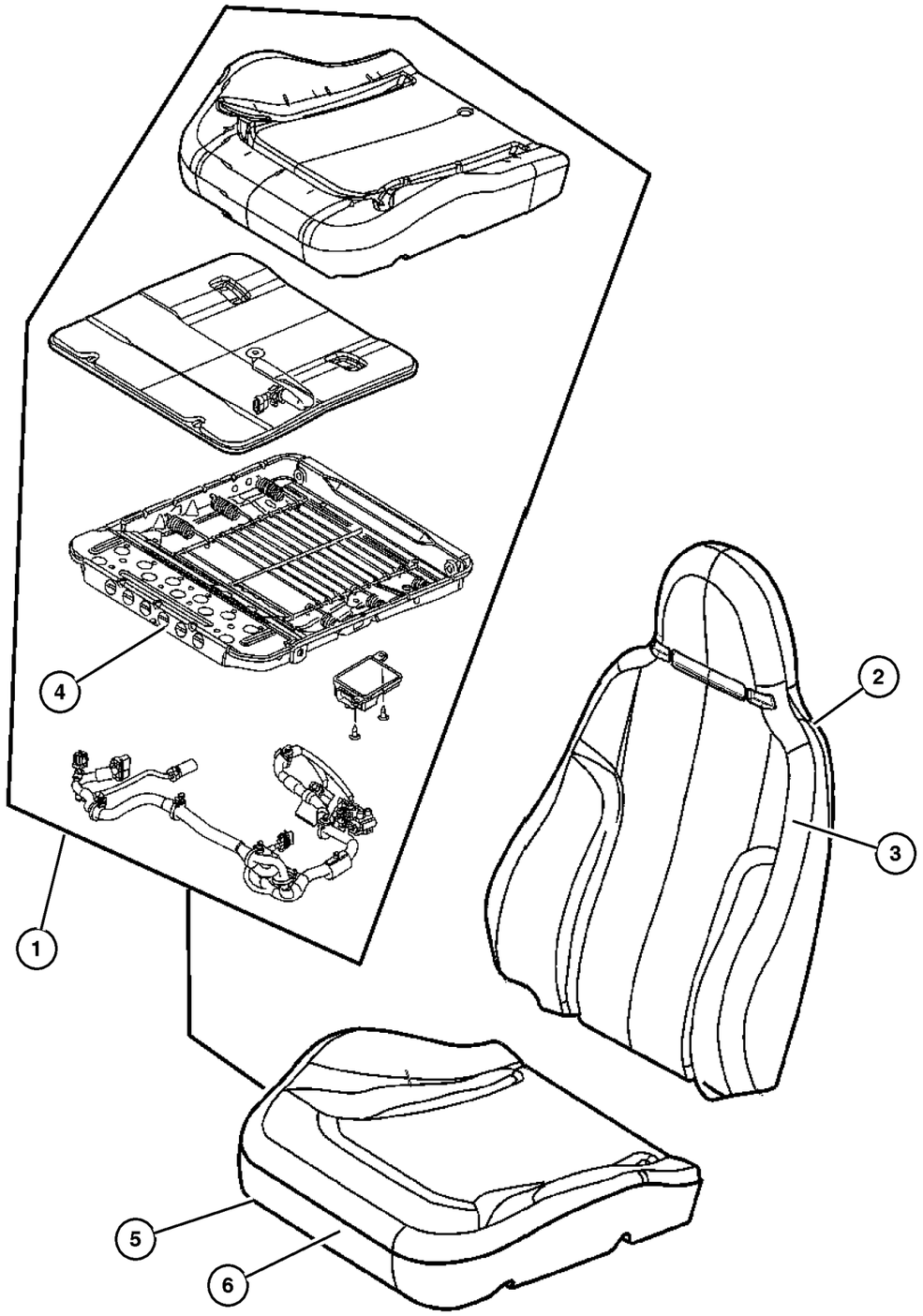

ITEM	PART NUMBER	QTY	LINE	SERIES	BODY	ENGINE	TRANS	TRIM	DESCRIPTION
Note; For United States/Canada vehicles only, if right side Cushion Foam is needed order Bladder Repair Kit. Do not attempt to replace the right side Cushion Foam separately as it may interfere with the calibration of the Occupant Classification System.									
1	5142 936AA	1	J, T					N5	BLADDER REPAIR KIT, Occupant Classification System, See Note, Right Side Only
2									BACK, Front Seat
	1BC72 1D5AA	1	J, T					N5	[D5], Right
	1BC72 1J3AA	1	J, T					N5	[J3], Right
	1BC73 1D5AA	1	J, T					N5	[D5], Left
	1BC73 1J3AA	1	J, T					N5	[J3], Left
3									COVER, Front Seat Back
	1BC70 1D5AA	1	J, T					N5	[D5], Right & Left
	1BC70 1J3AA	1	J, T					N5	[J3], Right & Left
4									FRAME, Front Seat Cushion
	5126 322AA	1	J, T					N5	Right
	5126 323AA	1	J, T					N5	Left
5									COVER, Front Seat Cushion
	1BC71 1D5AA	2	J, T					N5	[D5], Right & Left
	1BC71 1J3AA	2	J, T					N5	[J3], Right & Left
6	5142 748AA	2	J, T					N5	FOAM, Seat Cushion
-7	5093 977AA-	1	J, T					N5	WIRE KIT, Trimming

2006 Liberty (KJ)

SERIES	LINE	BODY	ENGINE	TRANSMISSION
H =HIGHLINE	T =JEEP - 2WD	74 =SPORT UTILITY 4-DR	EKG=3.7L V6 Eng.	DG6=4-Spd. Auto. 42RLE Trans.
M =MEDIUM	J =JEEP - 4WD		ENR=2.8L 4 Cyl Turbo Diesel Eng.	DGV=4-Spd. Auto. VLP Trans.
P =PREMIUM	U =JEEP - 4WD (RHD)		ENJ=2.5L 4 Cyl 16V Turbo Diesel Eng.	DGQ=5-Spd Auto. 5-45RFE Trans.
			ED1=2.4L 4 Cyl DOHC 16v SMPI Eng.	DEH=6-Speed Man. NSG370 Trans.
				DDD=5-Speed HD Man. Trans.
				DDK=5-Speed HD Man. Trans.

Front Seat, Cloth, High Back, Trim Code [B5]
Figure IKJ-530

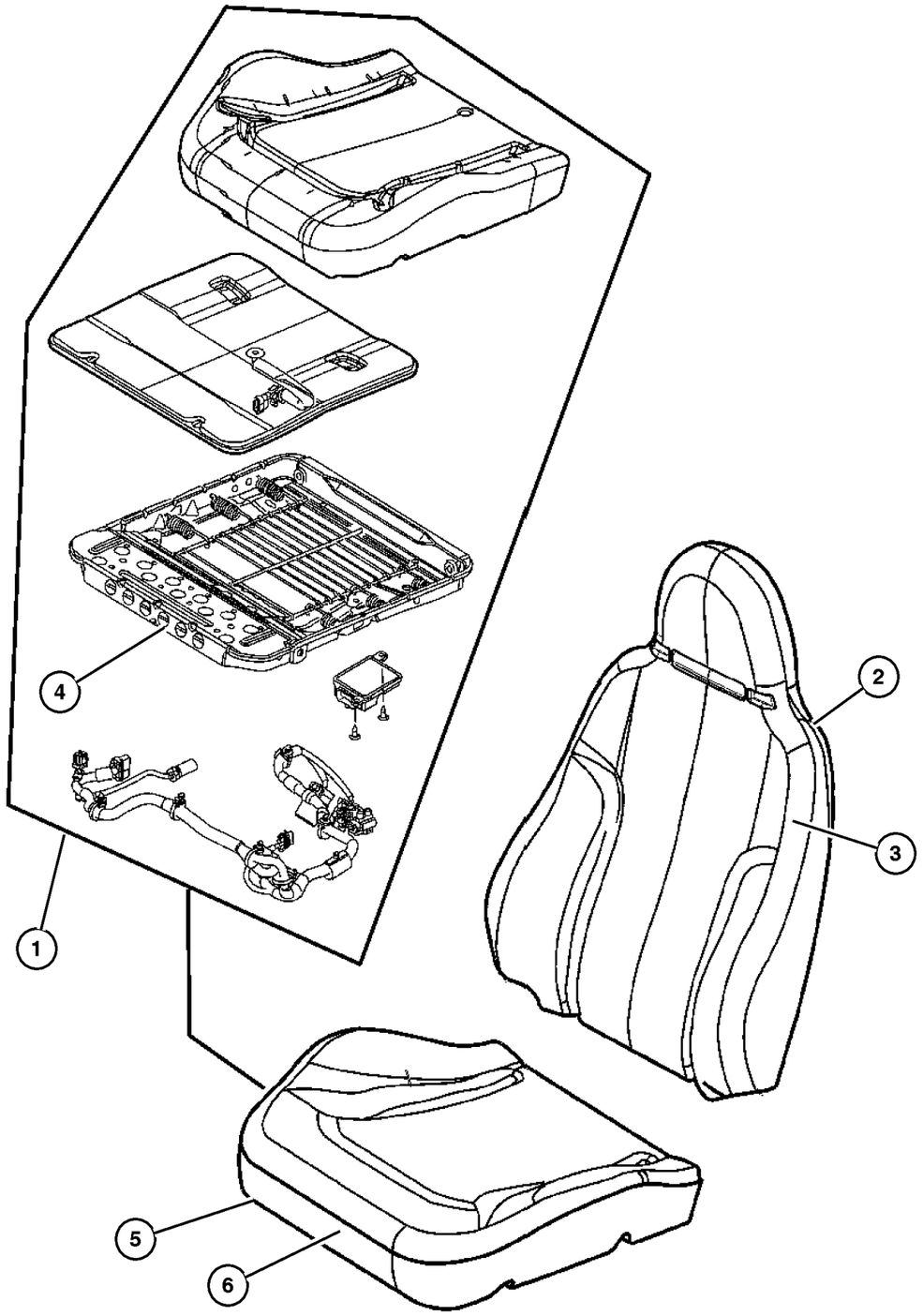

ITEM	PART NUMBER	QTY	LINE	SERIES	BODY	ENGINE	TRANS	TRIM	DESCRIPTION
Note; For United States/Canada vehicles only, if right side Cushion Foam is needed order Bladder Repair Kit. Do not attempt to replace the right side Cushion Foam separately as it may interfere with the calibration of the Occupant Classification System.									
1	5142 936AA	1	J, T					B5	BLADDER REPAIR KIT, Occupant Classification System, See Note, Right Side Only
2									BACK, Front Seat
	1BD06 1D5AA	1	J, T					B5	[D5], Right
	1BD06 1J3AA	1	J, T					B5	[J3], Right
	1BD07 1D5AA	1	J, T					B5	[D5], Left
	1BD07 1J3AA	1	J, T					B5	[J3], Left
3									COVER, Front Seat Back
	1BD04 1D5AA	1	J, T					B5	[D5], Right
	1BD04 1J3AA	1	J, T					B5	[J3], Right
	1BD05 1D5AA	1	J, T					B5	[D5], Left
	1BD05 1J3AA	1	J, T					B5	[J3], Left
4									FRAME, Front Seat Cushion
	5126 322AA	1	J, T					B5	Right
	5126 323AA	1	J, T					B5	Left
5									COVER, Front Seat Cushion
	1BC91 1D5AA	2	J, T					B5	[D5]
	1BC91 1J3AA	2	J, T					B5	[J3]
6	5142 748AA	2	J, T					B5	FOAM, Seat Cushion
-7	5093 978AA-	1	J, T					B5	WIRE KIT, Trimming

2006 Liberty (KJ)

SERIES	LINE	BODY	ENGINE	TRANSMISSION
H =HIGHLINE	T =JEEP - 2WD	74 =SPORT UTILITY 4-DR	EKG=3.7L V6 Eng.	DG6=4-Spd. Auto. 42RLE Trans.
M =MEDIUM	J =JEEP - 4WD		ENR=2.8L 4 Cyl Turbo Diesel Eng.	DGV=4-Spd. Auto. VLP Trans.
P =PREMIUM	U =JEEP - 4WD (RHD)		ENJ=2.5L 4 Cyl 16V Turbo Diesel Eng.	DGQ=5-Spd Auto. 5-45RFE Trans.
			ED1=2.4L 4 Cyl DOHC 16v SMPI Eng.	DEH=6-Speed Man. NSG370 Trans.
				DDD=5-Speed HD Man. Trans.
				DDK=5-Speed HD Man. Trans.

Front Seat, Cloth, Low Back, Trim Code [B7]
Figure IKJ-540

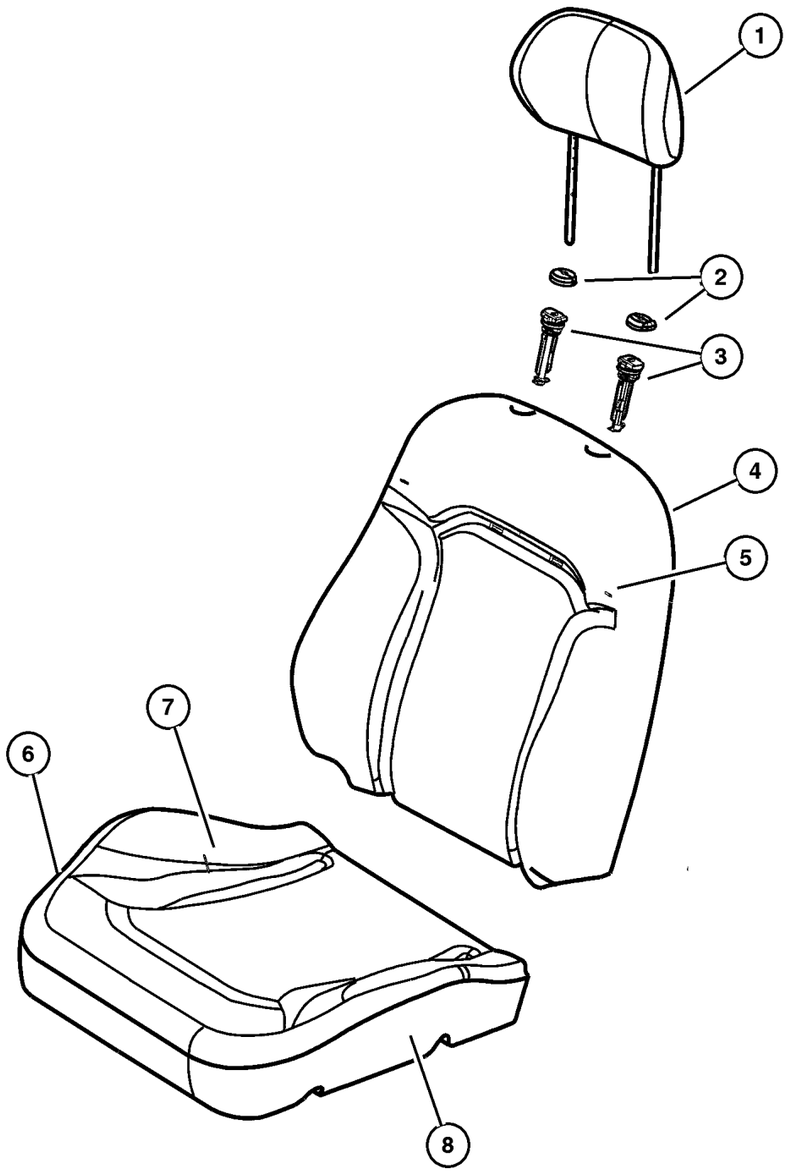

ITEM	PART NUMBER	QTY	LINE	SERIES	BODY	ENGINE	TRANS	TRIM	DESCRIPTION
1									HEADREST, Front
	1BC67 1D5AA	2	J, U					B7	[D5]
	1BC67 1J3AA	2	J, U					B7	[J3]
2									CAP, Headrest Adjuster
	WA49 1D5AA	1	J, U					B7	[D5] With Button
	WA49 1J3AA	1	J, U					B7	[J3] With Button
	WA50 1D5AA	1	J, U					B7	[D5] Without Button
	WA50 1J3AA	1	J, U					B7	[J3] Without Button
3	5066 563AA	2	J, U					B7	SLEEVE, Headrest
4									BACK, Front Seat
	1BC64 1D5AA	1	J, U					B7	[D5], Right
	1BC64 1J3AA	1	J, U					B7	[J3], Right
	1BC65 1D5AA	1	J, U					B7	[D5], Left
	1BC65 1J3AA	1	J, U					B7	[J3], Left
5									COVER, Front Seat Back
	1BC66 1D5AA	1	J, U					B7	[D5], Right & Left
	1BC66 1J3AA	1	J, U					B7	[J3], Right & Left
6									FRAME, Front Seat Cushion
	5126 322AA	1	J, U					B7	Right
	5126 323AA	1	J, U					B7	Left
7									COVER, Front Seat Cushion
	1BC71 1D5AA	2	J, U					B7	[D5], Right & Left
	1BC71 1J3AA	2	J, U					B7	[J3], Right & Left
8	5142 748AA	2	J, U					B7	FOAM, Seat Cushion
-9	5093 977AA-	2	J, U					B7	WIRE KIT, Trimming

2006 Liberty (KJ)

SERIES	LINE	BODY	ENGINE	TRANSMISSION
H =HIGHLINE	T =JEEP - 2WD	74 =SPORT UTILITY 4-DR	EKG=3.7L V6 Eng.	DG6=4-Spd. Auto. 42RLE Trans.
M =MEDIUM	J =JEEP - 4WD		ENR=2.8L 4 Cyl Turbo Diesel Eng.	DGV=4-Spd. Auto. VLP Trans.
P =PREMIUM	U =JEEP - 4WD (RHD)		ENJ=2.5L 4 Cyl 16V Turbo Diesel Eng.	DGQ=5-Spd Auto. 5-45RFE Trans.
			ED1=2.4L 4 Cyl DOHC 16v SMPI Eng.	DEH=6-Speed Man. NSG370 Trans.
				DDD=5-Speed HD Man. Trans.
				DDK=5-Speed HD Man. Trans.

Front Seat, Cloth, Low Back, Trim Code [J7]
Figure IKJ-560

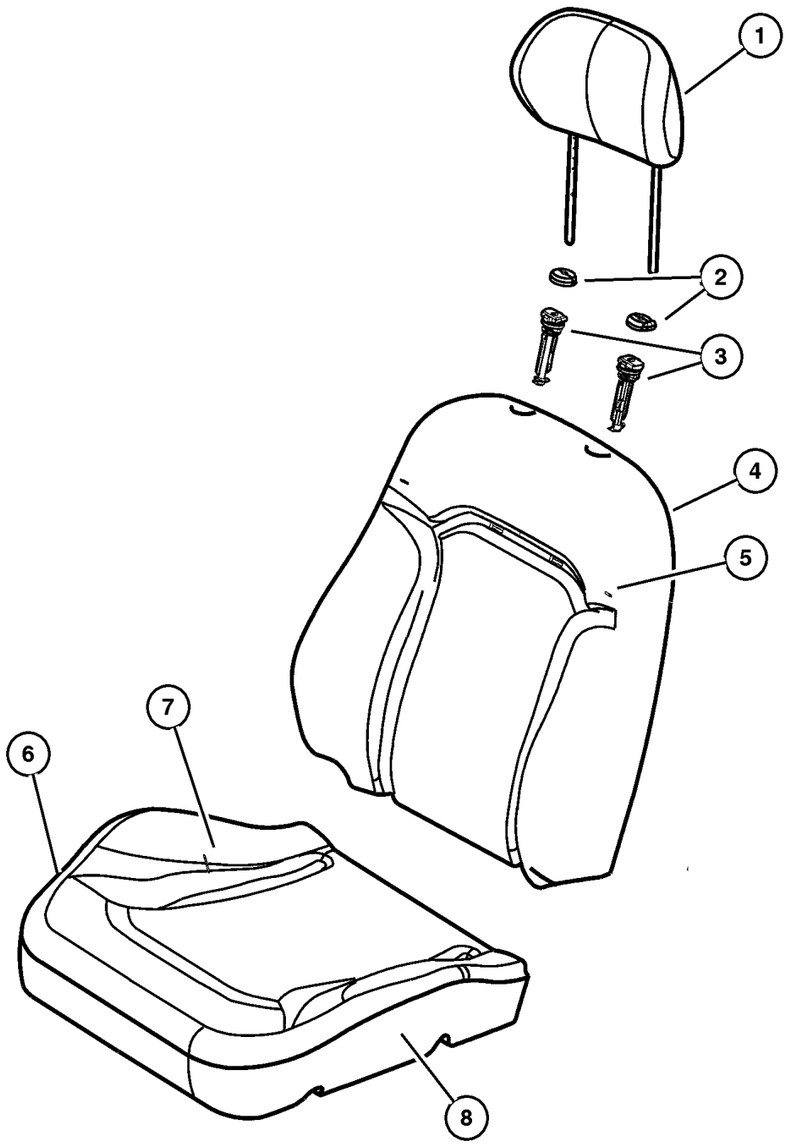

ITEM	PART NUMBER	QTY	LINE	SERIES	BODY	ENGINE	TRANS	TRIM	DESCRIPTION
1									HEADREST, Front
	1BD01 1D5AA	2	J, U					J7	[D5]
	1BD01 1J3AA	2	J, U					J7	[J3]
2									CAP, Headrest Adjuster
	WA49 1D5AA	1	J, U					J7	[D5],With Button
	WA49 1J3AA	1	J, U					J7	[J3], With Button
	WA50 1D5AA	1	J, U					J7	[D5],Without Button
	WA50 1J3AA	1	J, U					J7	[J3], Without Button
3	5066 563AA	2	J, U					J7	SLEEVE, Headrest
4									BACK, Front Seat
	1BD10 1D5AA	1	J, U					J7	[D5], Right
	1BD10 1J3AA	1	J, U					J7	[J3], Right
	1BD11 1D5AA	1	J, U					J7	[D5], Left
	1BD11 1J3AA	1	J, U					J7	[J3], Left
5									COVER, Front Seat Back
	1BD08 1D5AA	1	J, U					J7	[D5], Right
	1BD08 1J3AA	1	J, U					J7	[J3], Right
	1BD09 1D5AA	1	J, U					J7	[D5], Left
	1BD09 1J3AA	1	J, U					J7	[J3], Left
6									FRAME, Front Seat Cushion
	5126 322AA	1	J, U					J7	Right
	5126 323AA	1	J, U					J7	Left
7									COVER, Front Seat Cushion
	1BC91 1D5AA	2	J, U					J7	[D5], Right & Left
	1BC91 1J3AA	2	J, U					J7	[J3], Right & Left
8	5142 748AA	2	J, U					J7	FOAM, Seat Cushion
-9	5093 977AA-	2	J, U					J7	WIRE KIT, Trimming

2006 Liberty (KJ)

SERIES	LINE	BODY	ENGINE	TRANSMISSION
H =HIGHLINE	T =JEEP - 2WD	74 =SPORT UTILITY 4-DR	EKG=3.7L V6 Eng.	DG6=4-Spd. Auto. 42RLE Trans.
M =MEDIUM	J =JEEP - 4WD		ENR=2.8L 4 Cyl Turbo Diesel Eng.	DGV=4-Spd. Auto. VLP Trans.
P =PREMIUM	U =JEEP - 4WD (RHD)		ENJ=2.5L 4 Cyl 16V Turbo Diesel Eng.	DGQ=5-Spd Auto. 5-45RFE Trans.
			ED1=2.4L 4 Cyl DOHC 16v SMPI Eng.	DEH=6-Speed Man. NSG370 Trans.
				DDD=5-Speed HD Man. Trans.
				DDK=5-Speed HD Man. Trans.

Front Seat, Cloth, Low Back, Trim Code [L7]
Figure IKJ-570

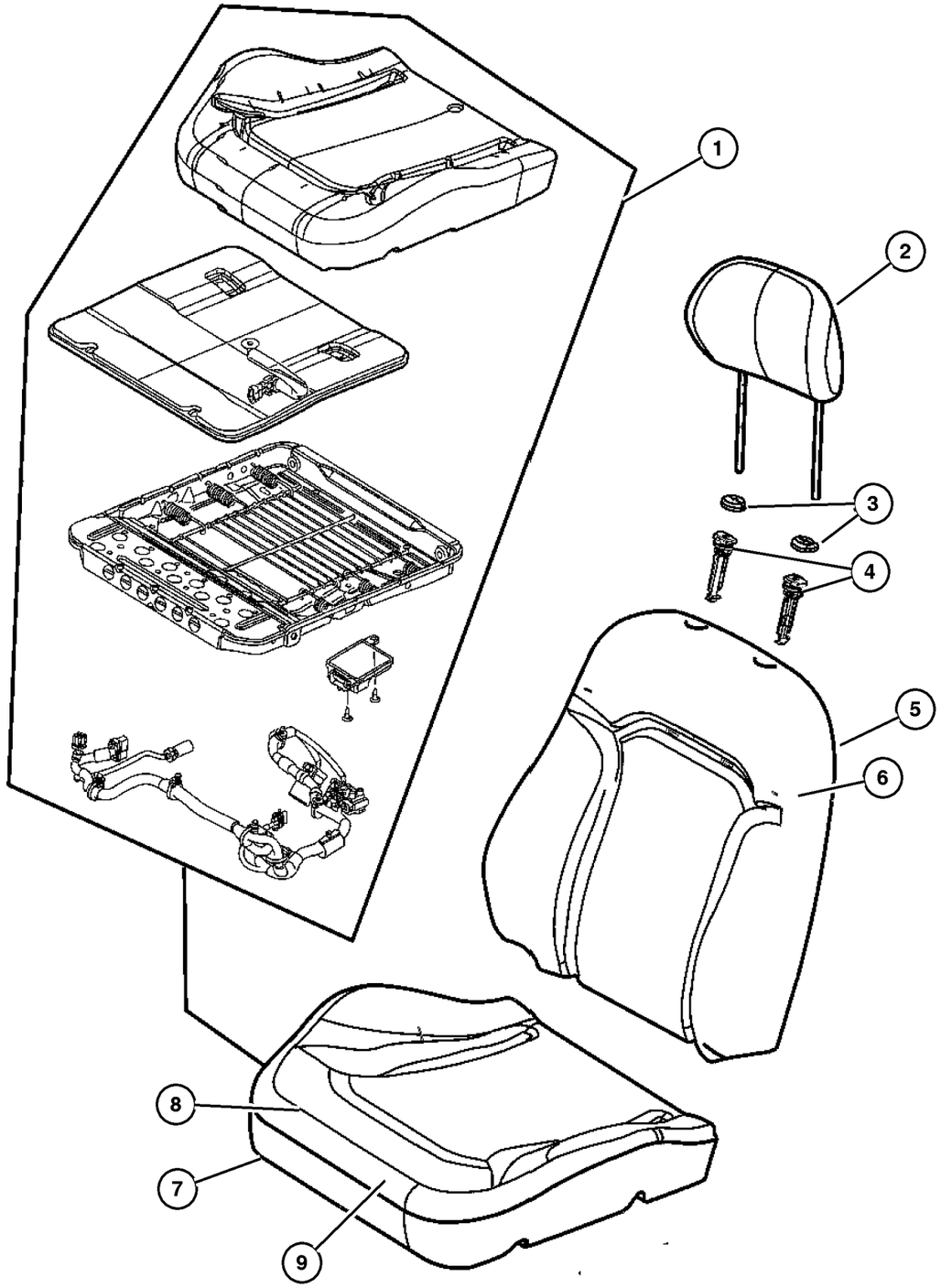

ITEM	PART NUMBER	QTY	LINE	SERIES	BODY	ENGINE	TRANS	TRIM	DESCRIPTION
Note; For United States/Canada vehicles only, if right side Cushion Foam is needed order Bladder Repair Kit. Do not attempt to replace the right side Cushion Foam separately as it may interfere with the calibration of the Occupant Classification System.									
1	5142 936AA	1	J, T					L7	BLADDER REPAIR KIT, Occupant Classification System, See Note, Right Side Only
2									HEADREST, Front
	1BC84 1D5AA	2	J, T					L7	[D5]
		2	J, U					L7	[D5]
	1BC84 1J3AA	2	J, T					L7	[J3]
		2	J, U					L7	[J3]
3									CAP, Headrest Adjuster
	WA49 1D5AA	1	J, T					L7	[D5],With Button
	WA49 1J3AA	1	J, T					L7	[J3],With Button
	WA50 1D5AA	1	J, T					L7	[D5],Without Button
	WA50 1J3AA	1	J, T					L7	[J3],Without Button
4									SLEEVE, Headrest
	5066 563AA	1	J, T					L7	
		1	J, U					L7	
5									BACK, Front Seat
	1BC88 1D5AA	1	J, T					L7	[D5], Right
		1	J, U					L7	[D5], Right
	1BC88 1J3AA	1	J, T					L7	[J3], Right
		1	J, U					L7	[J3], Right
	1BC89 1D5AA	1	J, T					L7	[D5], Left
		1	J, U					L7	[D5], Left
	1BC89 1J3AA	1	J, T					L7	[J3], Left
		1	J, U					L7	[J3], Left
6									COVER, Front Seat Back
	1BC86 1D5AA	1	J, T					L7	[D5], Right
	1BC86 1J3AA	1	J, T					L7	[J3], Right
	1BC86 1D5AA	1	J, U					L7	[D5], Right
	1BC86 1J3AA	1	J, U					L7	[J3], Right
	1BC87 1D5AA	1	J, T					L7	[D5], Left
		1	J, U					L7	[D5], Left
	1BC87 1J3AA	1	J, T					L7	[J3], Left
		1	J, U					L7	[J3], Left
7									FRAME, Front Seat Cushion
	5126 323AA	1	J, T					L7	Left
		1	J, T					L7	Right
	5126 322AA	1	J, U					L7	Right
	5126 323AA	1	J, U					L7	Left
8									COVER, Front Seat Cushion

2006 Liberty (KJ)

SERIES	LINE	BODY	ENGINE	TRANSMISSION
H =HIGHLINE	T =JEEP - 2WD	74 =SPORT UTILITY 4-DR	EKG=3.7L V6 Eng.	DG6=4-Spd. Auto. 42RLE Trans.
M =MEDIUM	J =JEEP - 4WD		ENR=2.8L 4 Cyl Turbo Diesel Eng.	DGV=4-Spd. Auto. VLP Trans.
P =PREMIUM	U =JEEP - 4WD (RHD)		ENJ=2.5L 4 Cyl 16V Turbo Diesel Eng.	DGQ=5-Spd Auto. 5-45RFE Trans.
			ED1=2.4L 4 Cyl DOHC 16v SMPI Eng.	DEH=6-Speed Man. NSG370 Trans.
				DDD=5-Speed HD Man. Trans.
				DDK=5-Speed HD Man. Trans.

Front Seat, Cloth, Low Back, Trim Code [L7]
Figure IKJ-570

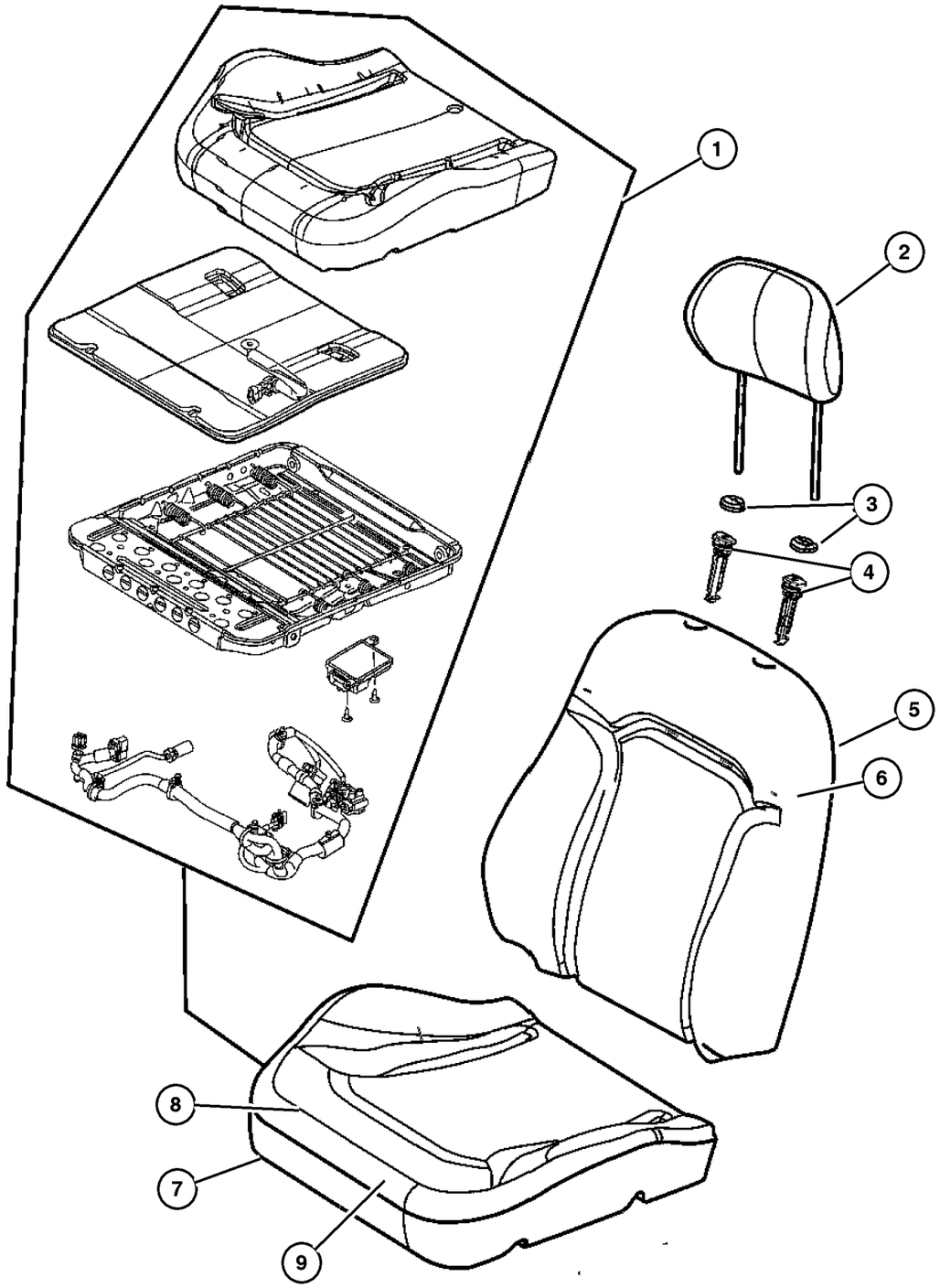

ITEM	PART NUMBER	QTY	LINE	SERIES	BODY	ENGINE	TRANS	TRIM	DESCRIPTION
	1BC90 1D5AA	2	J, T					L7	[D5], Right & Left
		2	J, U					L7	[D5], Right & Left
	1BC90 1J3AA	2	J, T					L7	[J3], Right & Left
		2	J, U					L7	[J3], Right & Left
9									FOAM, Seat Cushion
	5142 748AA	1	J, U					L7	
		1	J, T					L7	
-10									WIRE KIT, Trimming
	5093 978AA-	2	J, U					L7	
		2	J, T					L7	

2006 Liberty (KJ)

SERIES	LINE	BODY	ENGINE	TRANSMISSION
H =HIGHLINE	T =JEEP - 2WD	74 =SPORT UTILITY 4-DR	EKG=3.7L V6 Eng.	DG6=4-Spd. Auto. 42RLE Trans.
M =MEDIUM	J =JEEP - 4WD		ENR=2.8L 4 Cyl Turbo Diesel Eng.	DGV=4-Spd. Auto. VLP Trans.
P =PREMIUM	U =JEEP - 4WD (RHD)		ENJ=2.5L 4 Cyl 16V Turbo Diesel Eng.	DGQ=5-Spd Auto. 5-45RFE Trans.
			ED1=2.4L 4 Cyl DOHC 16v SMPI Eng.	DEH=6-Speed Man. NSG370 Trans.
				DDD=5-Speed HD Man. Trans.
				DDK=5-Speed HD Man. Trans.

Rear Seat, Trim Code [DL]
Figure IKJ-610

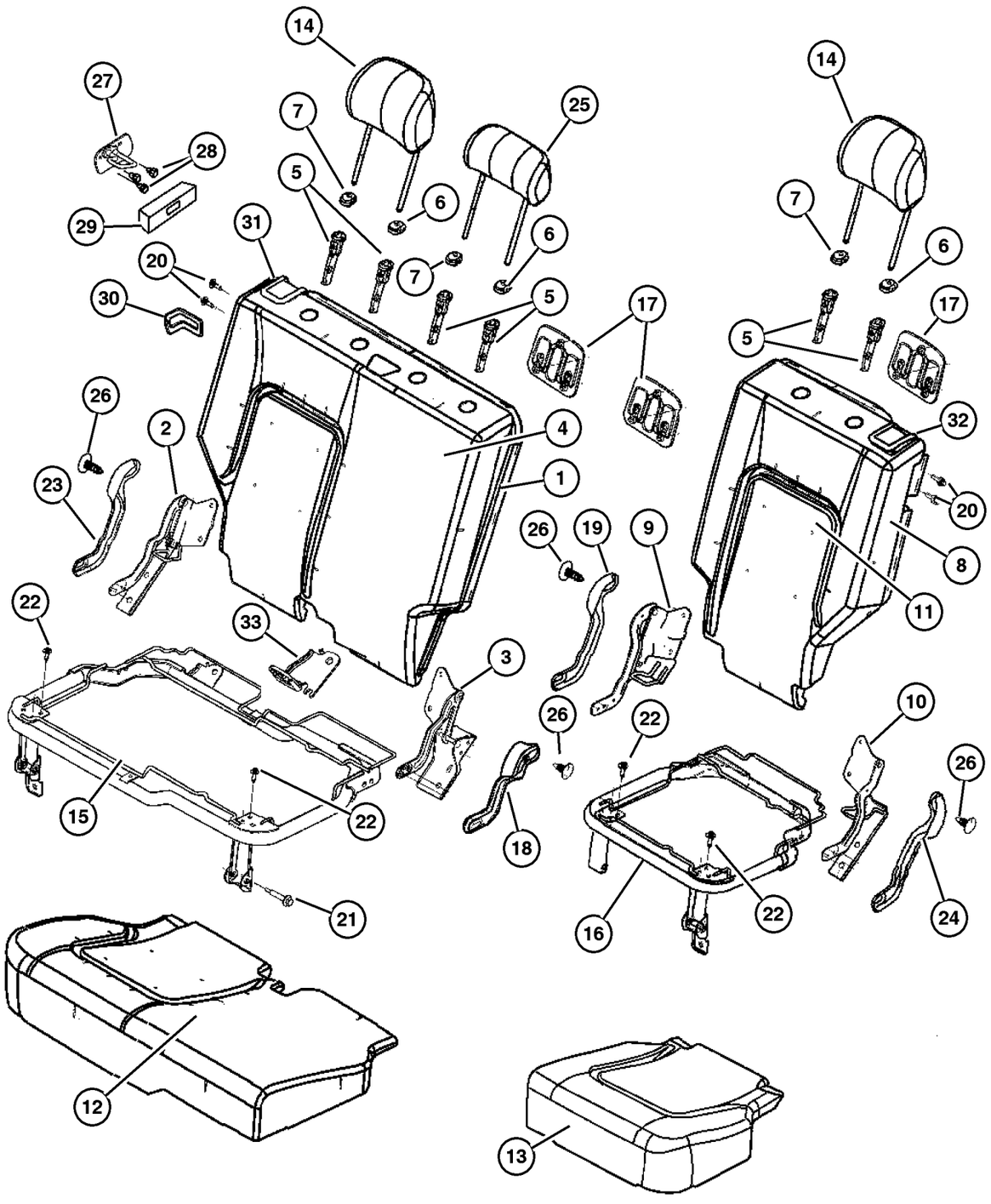

ITEM	PART NUMBER	QTY	LINE	SERIES	BODY	ENGINE	TRANS	TRIM	DESCRIPTION
1									SEAT BACK, Rear, 65%
	1BB66 1D1AA	1	J, T					DL	[J1]
	1BB66 1DBAA	1	J, T					DL	[DB]
	1BB68 1D1AA	1	J, U					DL	[J1]
	1BB68 1DBAA	1	J, U					DL	[DB]
2									BRACKET AND HINGE, Rear Seat Back, 65%
	5071 702AA	1	J, T					DL	Right Outboard
		1	J, U					DL	Right Outboard
3									BRACKET AND HINGE, Rear Seat Back, 65%
	5071 703AA	1	J, T					DL	Right Inboard
		1	J, U					DL	Right Inboard
4									COVER, Rear Seat Back, 65%
	1BB62 1D1AA	1	J, T					DL	[J1]
	1BB62 1DBAA	1	J, T					DL	[DB]
	1BB64 1D1AA	1	J, U					DL	[J1]
	1BB64 1DBAA	1	J, U					DL	[DB]
5									SLEEVE, Headrest
	5066 017AA	2	J, T					DL	
		2	J, U					DL	
6									CAP, Headrest Adjuster, With Button
	WA46 1D1AA	1	J, T					DL	[J1]
	WA46 1DBAA	1	J, T					DL	[DB]
	WA46 1D1AA	1	J, U					DL	[J1],Export
	WA46 1DBAA	1	J, U					DL	[DB],Export
7									CAP, Headrest Adjuster, Without Button
	WA31 1D1AA	1	J, T					DL	[J1]
	WA31 1DBAA	1	J, T					DL	[DB]
	WA31 1D1AA	2	J, U					DL	[J1] Export
	WA31 1DBAA	1	J, U					DL	[DB] Export
8									SEAT BACK, Rear, 35%
	1BB67 1D1AA	1	J, T					DL	[J1]
	1BB67 1DBAA	1	J, T					DL	[DB]
	1BB67 1D1AA	1	J, U					DL	[J1] Export
	1BB67 1DBAA	1	J, U					DL	[DB] Export
9									BRACKET AND HINGE, Rear Seat Back, 35%
	5071 704AA	1	J, T					DL	Left Inboard
		1	J, U					DL	Left Inboard Export
10									BRACKET AND HINGE, Rear Seat Back, 35%

2006 Liberty (KJ)

SERIES	LINE	BODY	ENGINE	TRANSMISSION
H =HIGHLINE	T =JEEP - 2WD	74 =SPORT UTILITY 4-DR	EKG=3.7L V6 Eng.	DG6=4-Spd. Auto. 42RLE Trans.
M =MEDIUM	J =JEEP - 4WD		ENR=2.8L 4 Cyl Turbo Diesel Eng.	DGV=4-Spd. Auto. VLP Trans.
P =PREMIUM	U =JEEP - 4WD (RHD)		ENJ=2.5L 4 Cyl 16V Turbo Diesel Eng.	DGQ=5-Spd Auto. 5-45RFE Trans.
			ED1=2.4L 4 Cyl DOHC 16v SMPI Eng.	DEH=6-Speed Man. NSG370 Trans.
				DDD=5-Speed HD Man. Trans.
				DDK=5-Speed HD Man. Trans.

AR = Use as required - = Non illustrated part # = New this model year

Rear Seat, Trim Code [DL]
Figure IKJ-610

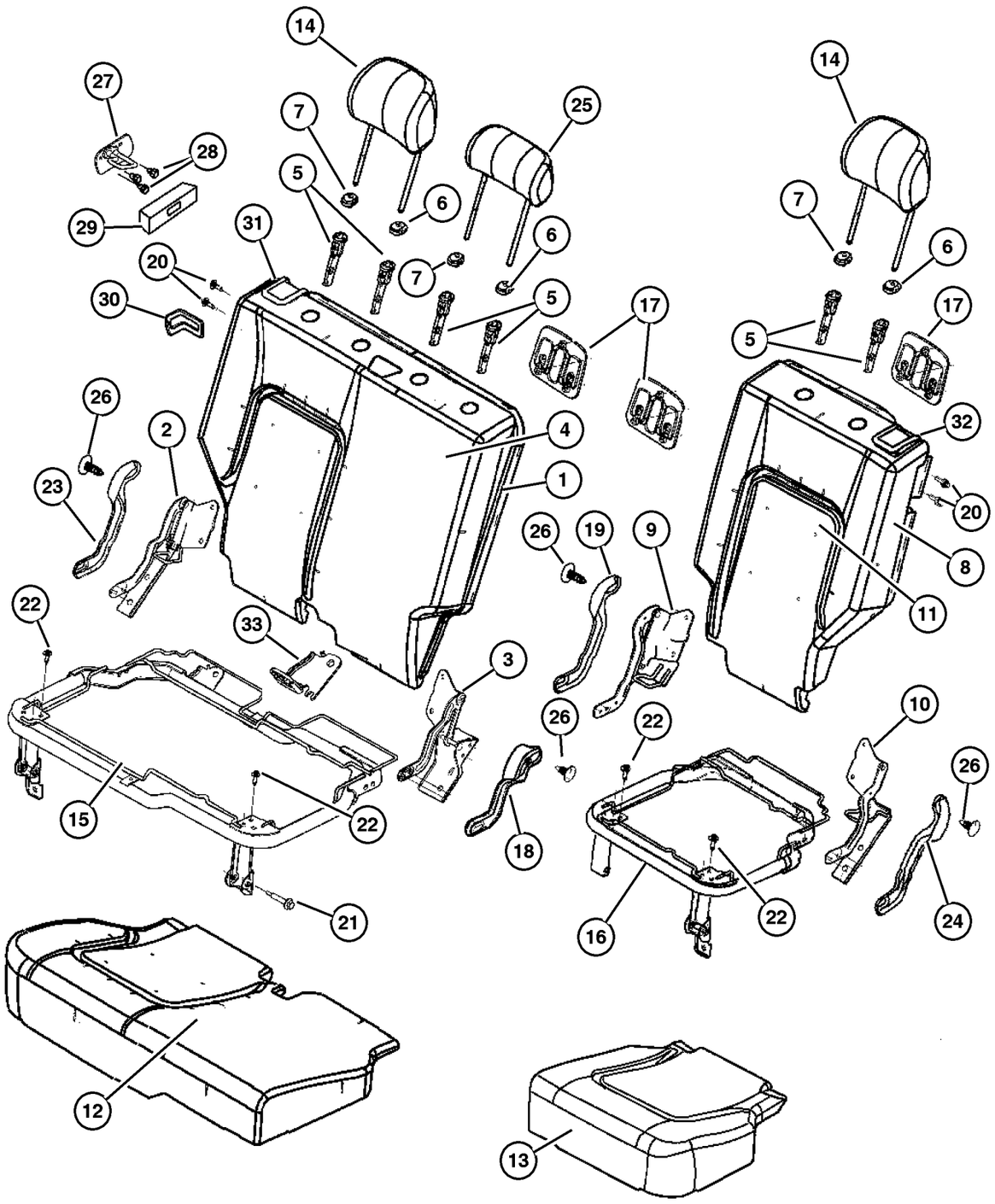

ITEM	PART NUMBER	QTY	LINE	SERIES	BODY	ENGINE	TRANS	TRIM	DESCRIPTION
	5071 705AA	1	J, T					DL	Left Outboard
		1	J, U					DL	Left Outboard Export
11									COVER, Rear Seat Back, 35%
	1BB63 1D1AA	1	J, T					DL	[J1]
	1BB63 1DBAA	1	J, T					DL	[DB]
	1BB63 1D1AA	1	J, U					DL	[J1] Export
	1BB63 1DBAA	1	J, U					DL	[DB] Export
12									COVER AND PAD, Cushion, 65%
	1BB60 1D1AA	1	J, T					DL	[J1]
	1BB60 1DBAA	1	J, T					DL	[DB]
	1BB60 1D1AA	1	J, U					DL	[J1] Export
	1BB60 1DBAA	1	J, U					DL	[DB] Export
13									COVER AND PAD, Cushion, 35%
	1BB61 1D1AA	1	J, T					DL	[J1]
	1BB61 1DBAA	1	J, T					DL	[DB]
	1BB61 1D1AA	1	J, U					DL	[J1] Export
	1BB61 1DBAA	1	J, U					DL	[DB] Export
14									HEADREST, Rear
	1BB69 1D1AA	2	J, T					DL	[J1]
	1BB69 1DBAA	2	J, T					DL	[DB]
	1BB69 1D1AA	2	J, U					DL	[J1] Export
	1BB69 1DBAA	2	J, U					DL	[DB] Export
15									PANEL, Seat Cushion Base, 65%
	5072 112AA	1	J, T					DL	
		1	J, U					DL	Export
16									PANEL, Seat Cushion Base, 35%
	5072 113AA	1	J, T					DL	
		1	J, U					DL	Export
17									BEZEL, TETHER
	WB44 XDHAA	2	J, T					DL	[DB]
	WB44 ZJ8AA	2	J, T					DL	[J1]
	WB44 XDHAA	1	J, U					DL	[DB] Export
	WB44 ZJ8AA	1	J, U					DL	[J1] Export
18									COVER, Hinge
	UZ45 1D1AA	1	J, T					DL	[J1]
	UZ45 1DBAA	1	J, T					DL	[DB]
	UZ45 1D1AA	1	J, U					DL	[J1] Export
	UZ45 1DBAA	1	J, U					DL	[DB] Export
19									COVER, Hinge
	UZ46 1D1AA	1	J, T					DL	[J1]
	UZ46 1DBAA	1	J, T					DL	[DB]
	UZ46 1D1AA	1	J, U					DL	[J1] Export

2006 Liberty (KJ)

SERIES	LINE	BODY	ENGINE	TRANSMISSION
H =HIGHLINE	T =JEEP - 2WD	74 =SPORT UTILITY 4-DR	EKG=3.7L V6 Eng.	DG6=4-Spd. Auto. 42RLE Trans.
M =MEDIUM	J =JEEP - 4WD		ENR=2.8L 4 Cyl Turbo Diesel Eng.	DGV=4-Spd. Auto. VLP Trans.
P =PREMIUM	U =JEEP - 4WD (RHD)		ENJ=2.5L 4 Cyl 16V Turbo Diesel Eng.	DGQ=5-Spd Auto. 5-45RFE Trans.
			ED1=2.4L 4 Cyl DOHC 16v SMPI Eng.	DEH=6-Speed Man. NSG370 Trans.
				DDD=5-Speed HD Man. Trans.
				DDK=5-Speed HD Man. Trans.

Rear Seat, Trim Code [DL]
Figure IKJ-610

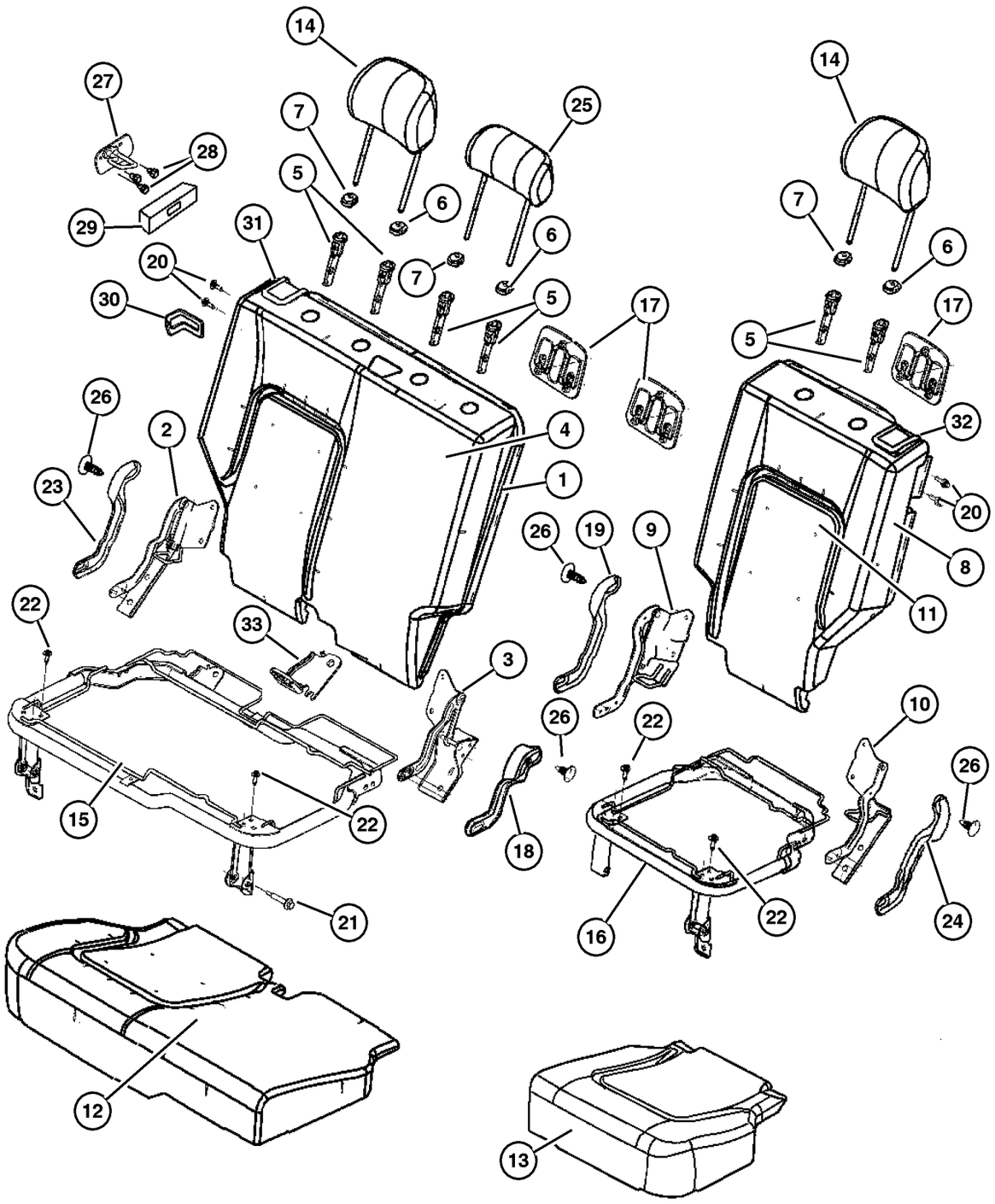

ITEM	PART NUMBER	QTY	LINE	SERIES	BODY	ENGINE	TRANS	TRIM	DESCRIPTION
	UZ46 1DBAA	1	J, U					DL	[DB] Export
20									BOLT, Pivot
	5072 520AA	2	J, T					DL	
		2	J, U					DL	Export
21									BOLT, Seat
	5072 519AA	1	J, T					DL	
		1	J, U					DL	Export
22									BOLT, Cushion To Adjuster
	4761 014	8	J, T					DL	
		8	J, U					DL	
23									COVER, Hinge
	UZ44 1D1AA	1	J, T					DL	[J1]
	UZ44 1DBAA	1	J, T					DL	DB]
	UZ44 1D1AA	1	J, U					DL	[J1] Export
	UZ44 1DBAA	1	J, U					DL	DB] Export
24									COVER, Hinge
	UZ47 1D1AA	1	J, T					DL	[J1]
	UZ47 1DBAA	1	J, T					DL	[DB]
	UZ47 1D1AA	1	J, U					DL	[J1] Export
	UZ47 1DBAA	1	J, U					DL	[DB] Export
25									HEADREST, Rear
	1BB70 1D1AA	1	J, U					DL	[J1] Export
	1BB70 1DBAA	1	J, U					DL	[DB] Export
26									PIN, Push
	WA51 1D1AA	2	J, T					DL	[J1]
	WA51 1DBAA	2	J, T					DL	[DB]
	WA51 1D1AA	2	J, U					DL	[J1] Export
	WA51 1DBAA	2	J, U					DL	[DB] Export
27									STRIKER, Seat Back Latch
	55352 816AC	1							Right
	55352 817AC	1							Left
28	6501 648	6							SCREW, Hex Flange Head, M8x1. 25x25.00
29	55352 839AC	2							BEZEL, Seat Latch
30									BEZEL, Seat Latch
	WA92 XDHAA	1	J, T					DL	[DB]
	WA92 ZJ8AA	1	J, T					DL	[J1]
	WA92 XDHAA	1	J, U					DL	[DB] Export
	WA92 ZJ8AA	1	J, U					DL	[J1] Export
31									CONTROL, SEAT RELEASE, With Cable and Latch
	XF78 1D1AB	1	J, T					DL	[J1]

2006 Liberty (KJ)

SERIES	LINE	BODY	ENGINE	TRANSMISSION
H =HIGHLINE	T =JEEP - 2WD	74 =SPORT UTILITY 4-DR	EKG=3.7L V6 Eng.	DG6=4-Spd. Auto. 42RLE Trans.
M =MEDIUM	J =JEEP - 4WD		ENR=2.8L 4 Cyl Turbo Diesel Eng.	DGV=4-Spd. Auto. VLP Trans.
P =PREMIUM	U =JEEP - 4WD (RHD)		ENJ=2.5L 4 Cyl 16V Turbo Diesel Eng.	DGQ=5-Spd Auto. 5-45RFE Trans.
			ED1=2.4L 4 Cyl DOHC 16v SMPI Eng.	DEH=6-Speed Man. NSG370 Trans.
				DDD=5-Speed HD Man. Trans.
				DDK=5-Speed HD Man. Trans.

Rear Seat, Trim Code [DL]
Figure IKJ-610

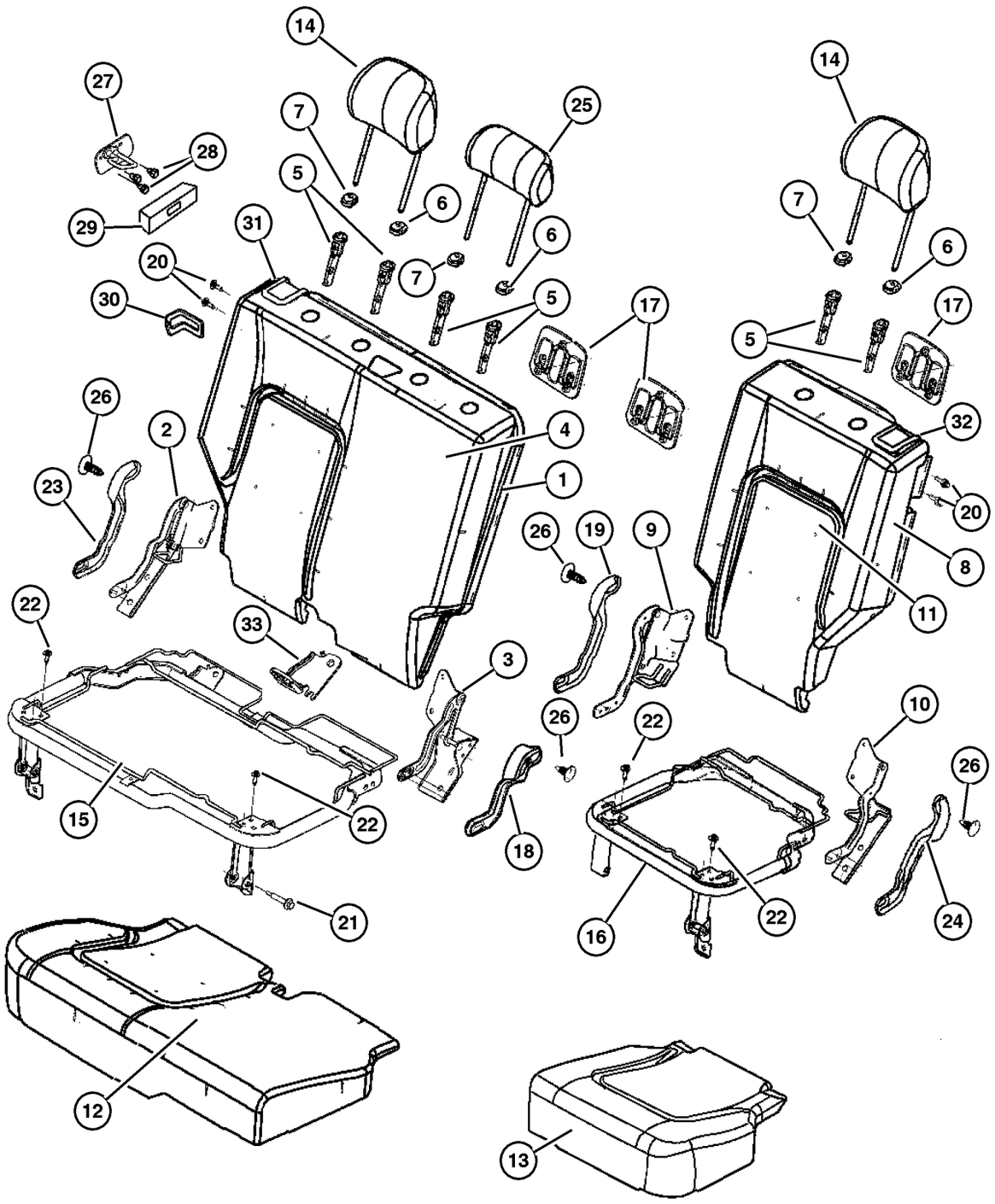

ITEM	PART NUMBER	QTY	LINE	SERIES	BODY	ENGINE	TRANS	TRIM	DESCRIPTION
	XF78 1DBAB	1	J, T					DL	[DB]
	XF78 1D1AB	1	J, U					DL	[J1] Export
	XF78 1DBAB	1	J, U					DL	[DB] Export
32									CONTROL, SEAT RELEASE, With Latch
	XF79 1D1AB	1	J, T					DL	[J1]
	XF79 1DBAB	1	J, T					DL	[DB]
	XF79 1D1AB	1	J, U					DL	[J1] Export
	XF79 1DBAB	1	J, U					DL	[DB] Export
33									BRACKET, Child Tether Anchor
	5134 366AA	1	J, T					DL	
		1	J, U					DL	Export

2006 Liberty (KJ)

SERIES	LINE	BODY	ENGINE	TRANSMISSION
H =HIGHLINE	T =JEEP - 2WD	74 =SPORT UTILITY 4-DR	EKG=3.7L V6 Eng.	DG6=4-Spd. Auto. 42RLE Trans.
M =MEDIUM	J =JEEP - 4WD		ENR=2.8L 4 Cyl Turbo Diesel Eng.	DGV=4-Spd. Auto. VLP Trans.
P =PREMIUM	U =JEEP - 4WD (RHD)		ENJ=2.5L 4 Cyl 16V Turbo Diesel Eng.	DGQ=5-Spd Auto. 5-45RFE Trans.
			ED1=2.4L 4 Cyl DOHC 16v SMPI Eng.	DEH=6-Speed Man. NSG370 Trans.
				DDD=5-Speed HD Man. Trans.
				DDK=5-Speed HD Man. Trans.

Rear Seat, Trim Code [N5]
Figure IKJ-620

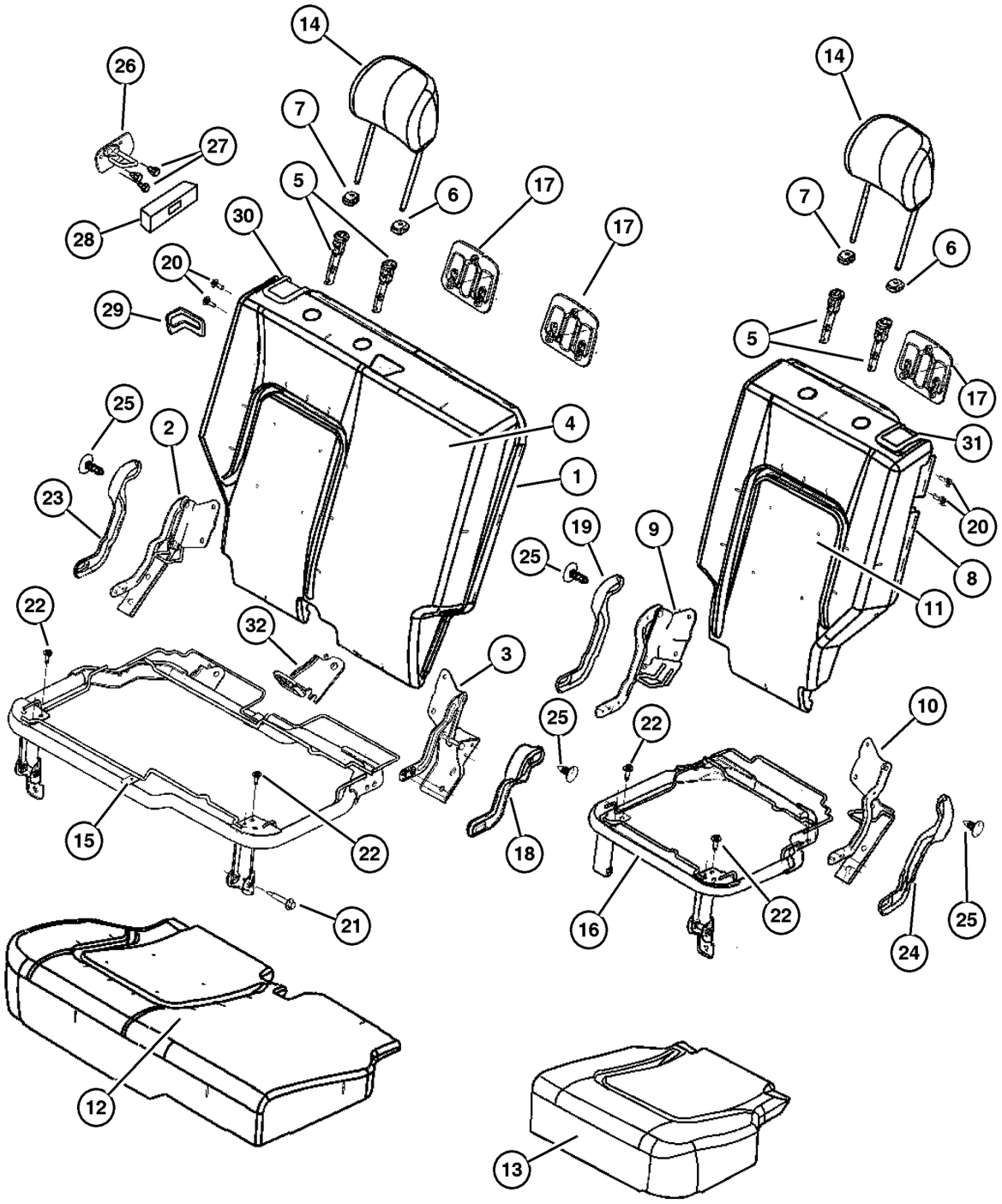

ITEM	PART NUMBER	QTY	LINE	SERIES	BODY	ENGINE	TRANS	TRIM	DESCRIPTION
1									SEAT BACK, Rear, 65%
	1BC74 1D5AA	1	J, T					N5	[D5]
	1BC74 1J3AA	1	J, T					N5	[J3]
2	5071 702AA	1	J, T					N5	BRACKET AND HINGE, Rear Seat Back, 65%, Right Outboard
3	5071 703AA	1	J, T					N5	BRACKET AND HINGE, Rear Seat Back, 65%, Right Inboard
4									COVER, Rear Seat Back, 65%
	1BC78 1D5AA	1	J, T					N5	[D5]
	1BC78 1J3AA	1	J, T					N5	[J3]
5	5066 017AA	2	J, T					N5	SLEEVE, Headrest
6									CAP, Headrest Adjuster, With Button
	WA46 1D5AA	1	J, T					N5	[D5]
	WA46 1J3AA	1	J, T					N5	[J3]
7									CAP, Headrest Adjuster, Without Button
	WA31 1D5AA	1	J, T					N5	[D5]
	WA31 1J3AA	1	J, T					N5	[J3]
8									SEAT BACK, Rear, 35%
	1BC75 1D5AA	1	J, T					N5	[D5]
	1BC75 1J3AA	1	J, T					N5	[J3]
9	5071 704AA	1	J, T					N5	BRACKET AND HINGE, Rear Seat Back, 35%, Left Inboard
10	5071 705AA	1	J, T					N5	BRACKET AND HINGE, Rear Seat Back, 35%, Left Outboard
11									COVER, Rear Seat Back, 35%
	1BC79 1D5AA	1	J, T					N5	[D5]
	1BC79 1J3AA	1	J, T					N5	[J3]
12									COVER AND PAD, Cushion, 65%
	1BC82 1D5AA	1	J, T					N5	[D5]
	1BC82 1J3AA	1	J, T					N5	[J3]
13									COVER AND PAD, Cushion, 35%
	1BC83 1D5AA	1	J, T					N5	[D5]
	1BC83 1J3AA	1	J, T					N5	[J3]
14									HEADREST, Rear
	1BC68 1D5AA	2	J, T					N5	[D5]
	1BC68 1J3AA	2	J, T					N5	[J3]
15	5072 112AA	1	J, T					N5	PANEL, Seat Cushion Base, 65%
16	5072 113AA	1	J, T					N5	PANEL, Seat Cushion Base, 35%
17									BEZEL, TETHER
	WB44 XDHAA	2	J, T					N5	[D5]
	WB44 ZJ8AA	2	J, T					N5	[J3]
18									COVER, Hinge, Right Inboard

2006 Liberty (KJ)

SERIES	LINE	BODY	ENGINE	TRANSMISSION
H =HIGHLINE	T =JEEP - 2WD	74 =SPORT UTILITY 4-DR	EKG=3.7L V6 Eng.	DG6=4-Spd. Auto. 42RLE Trans.
M =MEDIUM	J =JEEP - 4WD		ENR=2.8L 4 Cyl Turbo Diesel Eng.	DGV=4-Spd. Auto. VLP Trans.
P =PREMIUM	U =JEEP - 4WD (RHD)		ENJ=2.5L 4 Cyl 16V Turbo Diesel Eng.	DGQ=5-Spd Auto. 5-45RFE Trans.
			ED1=2.4L 4 Cyl DOHC 16v SMPI Eng.	DEH=6-Speed Man. NSG370 Trans.
				DDD=5-Speed HD Man. Trans.
				DDK=5-Speed HD Man. Trans.

AR = Use as required - = Non illustrated part # = New this model year

Rear Seat, Trim Code [N5]
Figure IKJ-620

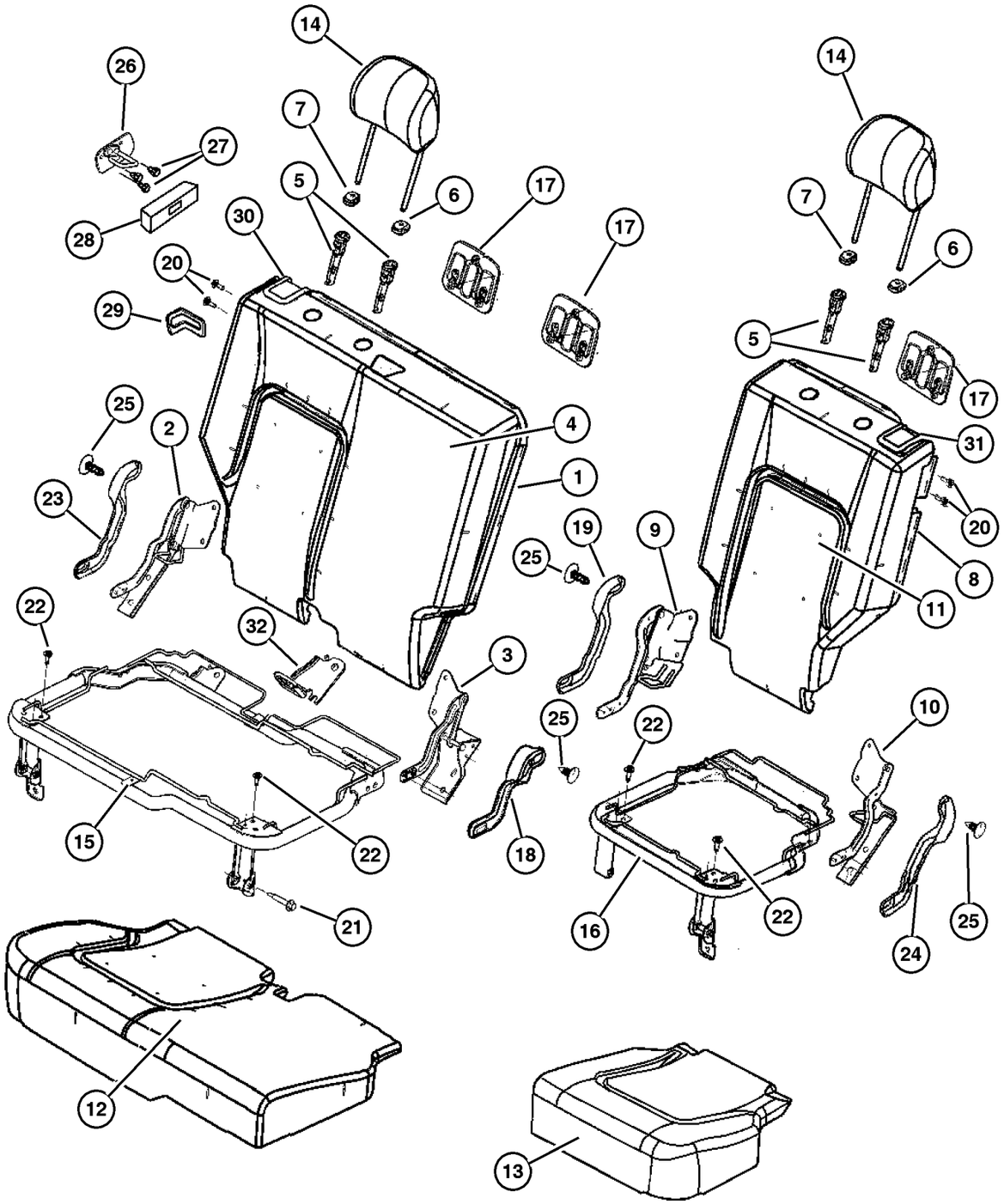

ITEM	PART NUMBER	QTY	LINE	SERIES	BODY	ENGINE	TRANS	TRIM	DESCRIPTION
	UZ45 1D5AA	1	J, T					N5	[D5]
	UZ45 1J3AA	1	J, T					N5	[J3]
19									COVER, Hinge, Left Inboard
	UZ46 1D5AA	1	J, T					N5	[D5]
	UZ46 1J3AA	1	J, T					N5	[J3]
20	5072 520AA	2	J, T					N5	BOLT, Pivot
21	5072 519AA	1	J, T					N5	BOLT, Seat
22	4761 014	8	J, T					N5	BOLT, Cushion To Adjuster
23									COVER, Hinge, Right Outboard
	UZ44 1D5AA	1	J, T					N5	[D5]
	UZ44 1J3AA	1	J, T					N5	[J3]
24									COVER, Hinge, Left Outboard
	UZ47 1D5AA	1	J, T					N5	[D5]
	UZ47 1J3AA	1	J, T					N5	[J3]
25									PIN, Push
	WA51 1D5AA	2	J, T					N5	[D5]
	WA51 1J3AA	2	J, T					N5	[J3]
26									STRIKER, Seat Back Latch
	55352 816AC	1							Right
	55352 817AC	1							Left
27	6501 648	6							SCREW, Hex Flange Head, M8x1. 25x25.00
28	55352 839AC	2							BEZEL, Seat Latch
29									BEZEL, Seat Latch
	WA92 XDHAA	1	J, T					N5	[D5]
	WA92 ZJ8AA	1	J, T					N5	[J3]
30									CONTROL, SEAT RELEASE, With Cable and Latch
	XF78 1D5AB	1	J, T					N5	[D5]
	XF79 1J3AB	1	J, T					N5	[J3]
31									CONTROL, SEAT RELEASE, With Latch
	XF79 1D5AB	1	J, T					N5	[D5]
	XF79 1J3AB	1	J, T					N5	[J3]
32	5134 366AA	1	J, T					N5	BRACKET, Child Tether Anchor

2006 Liberty (KJ)

SERIES	LINE	BODY	ENGINE	TRANSMISSION
H =HIGHLINE	T =JEEP - 2WD	74 =SPORT UTILITY 4-DR	EKG=3.7L V6 Eng.	DG6=4-Spd. Auto. 42RLE Trans.
M =MEDIUM	J =JEEP - 4WD		ENR=2.8L 4 Cyl Turbo Diesel Eng.	DGV=4-Spd. Auto. VLP Trans.
P =PREMIUM	U =JEEP - 4WD (RHD)		ENJ=2.5L 4 Cyl 16V Turbo Diesel Eng.	DGQ=5-Spd Auto. 5-45RFE Trans.
			ED1=2.4L 4 Cyl DOHC 16v SMPI Eng.	DEH=6-Speed Man. NSG370 Trans.
				DDD=5-Speed HD Man. Trans.
				DDK=5-Speed HD Man. Trans.

Rear Seat, Trim Code [B5]
Figure IKJ-630

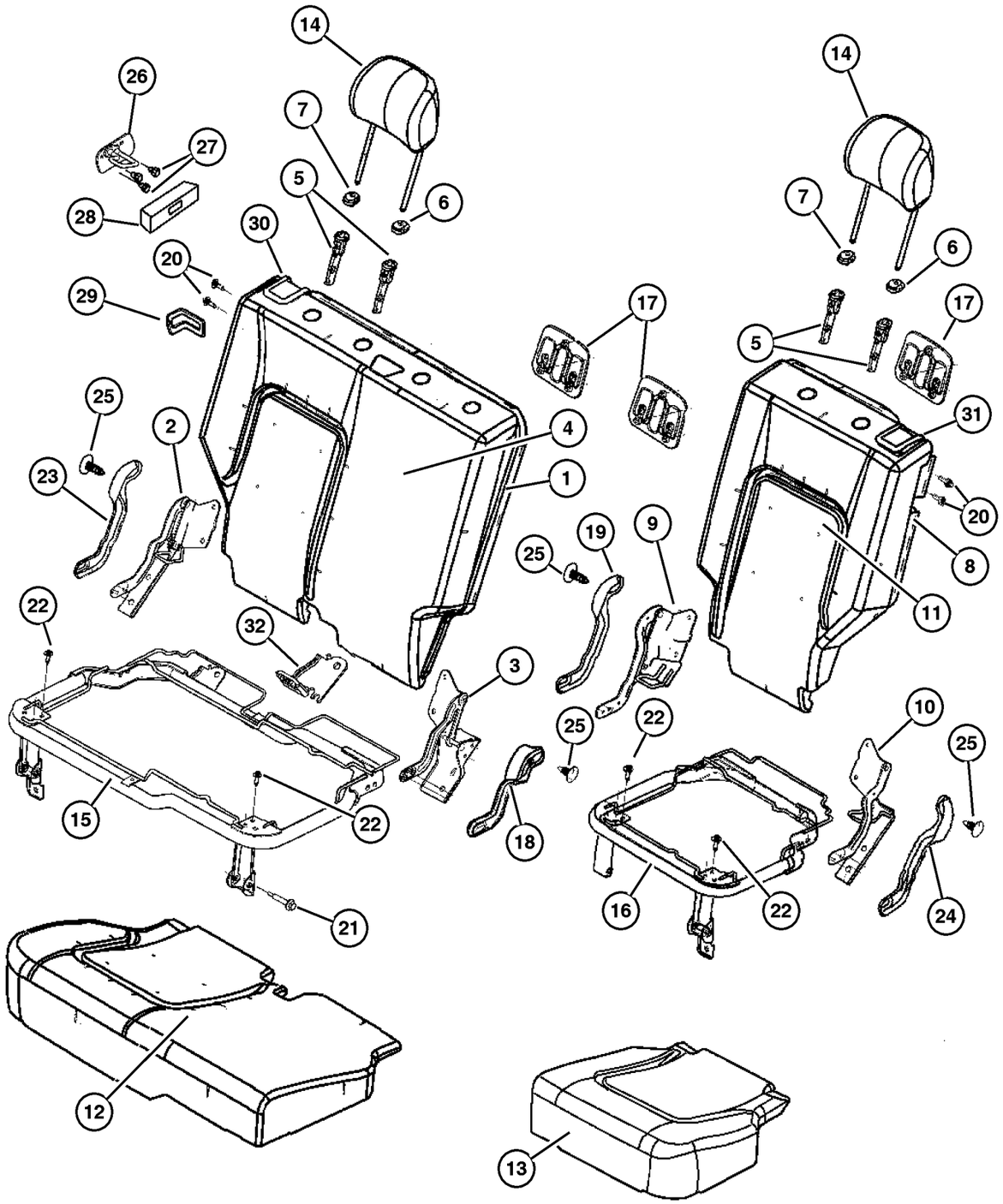

ITEM	PART NUMBER	QTY	LINE	SERIES	BODY	ENGINE	TRANS	TRIM	DESCRIPTION
1									SEAT BACK, Rear, 65%
	1BD16 1D5AA	1	J, T					B5	[D5]
	1BD16 1J3AA	1	J, T					B5	[J3]
2	5071 702AA	1	J, T					B5	BRACKET AND HINGE, Rear Seat Back, 65%, Right Outboard
3	5071 703AA	1	J, T					B5	BRACKET AND HINGE, Rear Seat Back, 65%, Right Inboard
4									COVER, Rear Seat Back, 65%
	1BD14 1D5AA	1	J, T					B5	[D5]
	1BD14 1J3AA	1	J, T					B5	[J3]
5	5066 017AA	2	J, T					B5	SLEEVE, Headrest
6									CAP, Headrest Adjuster, With Button
	WA46 1D5AA	1	J, T					B5	[D5]
	WA46 1J3AA	1	J, T					B5	[J3]
7									CAP, Headrest Adjuster, Without Button
	WA31 1D5AA	1	J, T					B5	[D5]
	WA31 1J3AA	1	J, T					B5	[J3]
8									SEAT BACK, Rear, 35%
	1BD17 1D5AA	1	J, T					B5	[D5]
	1BD17 1J3AA	1	J, T					B5	[J3]
9	5071 704AA	1	J, T					B5	BRACKET AND HINGE, Rear Seat Back, 35%
10	5071 705AA	1	J, T					B5	BRACKET AND HINGE, Rear Seat Back, 35%, Left Outboard
11									COVER, Rear Seat Back, 35%
	1BD15 1D5AA	1	J, T					B5	[D5]
	1BD15 1J3AA	1	J, T					B5	[J3]
12									COVER AND PAD, Cushion, 65%
	1BD13 1D5AA	1	J, T					B5	[D5]
	1BD13 1J3AA	1	J, T					B5	[J3]
13									COVER AND PAD, Cushion, 35%
	1BD13 1D5AA	1	J, T					B5	[D5]
	1BD13 1J3AA	1	J, T					B5	[J3]
14									HEADREST, Rear
	1BC97 1D5AA	2	J, T					B5	[D5]
	1BC97 1J3AA	2	J, T					B5	[J3]
15	5072 112AA	1	J, T					B5	PANEL, Seat Cushion Base, 65%
16	5072 113AA	1	J, T					B5	PANEL, Seat Cushion Base, 35%
17									BEZEL, TETHER
	WB44 XDHAA	2	J, T					B5	[D5]
	WB44 ZJ8AA	2	J, T					B5	[J3]
18									COVER, Hinge, Right Inboard

2006 Liberty (KJ)

SERIES	LINE	BODY	ENGINE	TRANSMISSION
H =HIGHLINE	T =JEEP - 2WD	74 =SPORT UTILITY 4-DR	EKG=3.7L V6 Eng.	DG6=4-Spd. Auto. 42RLE Trans.
M =MEDIUM	J =JEEP - 4WD		ENR=2.8L 4 Cyl Turbo Diesel Eng.	DGV=4-Spd. Auto. VLP Trans.
P =PREMIUM	U =JEEP - 4WD (RHD)		ENJ=2.5L 4 Cyl 16V Turbo Diesel Eng.	DGQ=5-Spd Auto. 5-45RFE Trans.
			ED1=2.4L 4 Cyl DOHC 16v SMPI Eng.	DEH=6-Speed Man. NSG370 Trans.
				DDD=5-Speed HD Man. Trans.
				DDK=5-Speed HD Man. Trans.

AR = Use as required - = Non illustrated part # = New this model year

Rear Seat, Trim Code [B5]
Figure IKJ-630

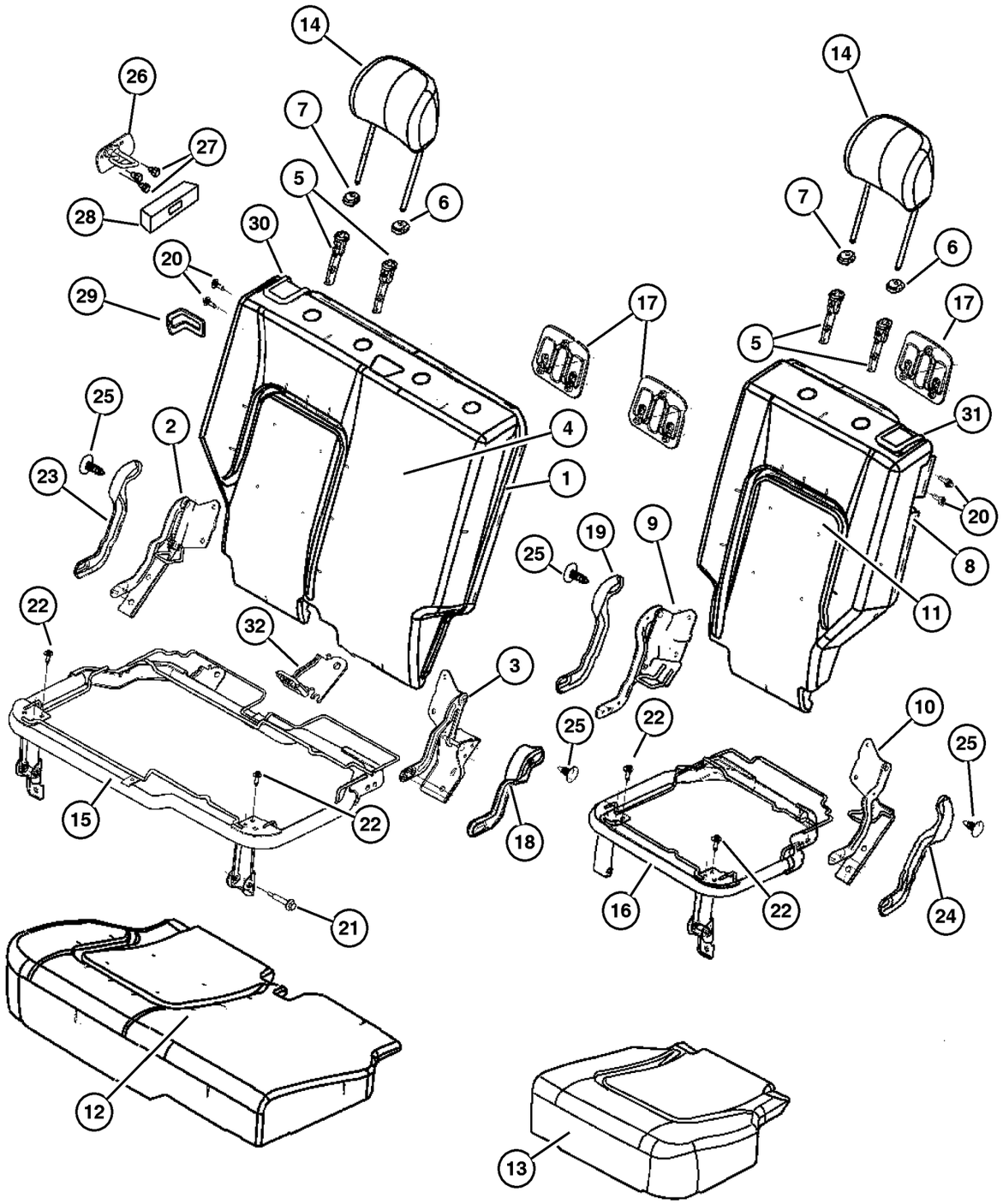

ITEM	PART NUMBER	QTY	LINE	SERIES	BODY	ENGINE	TRANS	TRIM	DESCRIPTION
	UZ45 1D5AA	1	J, T					B5	[D5] Right Inboard
	UZ45 1J3AA	1	J, T					B5	[J3] Right Inboard
19									COVER, Hinge, Left Inboard
	UZ46 1D5AA	1	J, T					B5	[D5] Left Inboard
	UZ46 1J3AA	1	J, T					B5	[J3] Left Inboard
20	5072 520AA	2	J, T					B5	BOLT, Pivot
21	5072 519AA	1	J, T					B5	BOLT, Seat
22	4761 014	8	J, T					B5	BOLT, Cushion To Adjuster
23									COVER, Hinge, Right Outboard
	UZ44 1D5AA	1	J, T					B5	[D5] Right Outboard
	UZ44 1J3AA	1	J, T					B5	[J3] Right Outboard
24									COVER, Hinge, Left Outboard
	UZ47 1D5AA	1	J, T					B5	[D5] Left Outboard
	UZ47 1J3AA	1	J, T					B5	[J3] Left Outboard
25									PIN, Push
	WA51 1D5AA	2	J, T					B5	[D5]
	WA51 1J3AA	2	J, T					B5	[J3]
26									STRIKER, Seat Back Latch
	55352 816AC	1							Right
	55352 817AC	1							Left
27	6501 648	6							SCREW, Hex Flange Head, M8x1. 25x25.00
28	55352 839AC	2							BEZEL, Seat Latch
29									BEZEL, Seat Latch
	WA92 XDHAA	1	J, T					B5	[D5]
	WA92 ZJ8AA	1	J, T					B5	[J3]
30									CONTROL, SEAT RELEASE, With Cable and Latch
	XF78 1D5AB	1	J, T					B5	[D5]
	XF78 1J3AB	1	J, T					B5	[J3]
31									CONTROL, SEAT RELEASE, With Latch
	XF79 1D5AB	1	J, T					B5	[D5]
	XF79 1J3AB	1	J, T					B5	[J3]
32	5134 366AA	1	J, T					N5	BRACKET, Child Tether Anchor

2006 Liberty (KJ)

SERIES	LINE	BODY	ENGINE	TRANSMISSION
H =HIGHLINE	T =JEEP - 2WD	74 =SPORT UTILITY 4-DR	EKG=3.7L V6 Eng.	DG6=4-Spd. Auto. 42RLE Trans.
M =MEDIUM	J =JEEP - 4WD		ENR=2.8L 4 Cyl Turbo Diesel Eng.	DGV=4-Spd. Auto. VLP Trans.
P =PREMIUM	U =JEEP - 4WD (RHD)		ENJ=2.5L 4 Cyl 16V Turbo Diesel Eng.	DGQ=5-Spd Auto. 5-45RFE Trans.
			ED1=2.4L 4 Cyl DOHC 16v SMPI Eng.	DEH=6-Speed Man. NSG370 Trans.
				DDD=5-Speed HD Man. Trans.
				DDK=5-Speed HD Man. Trans.

Rear Seat, Trim Code [B7]
Figure IKJ-640

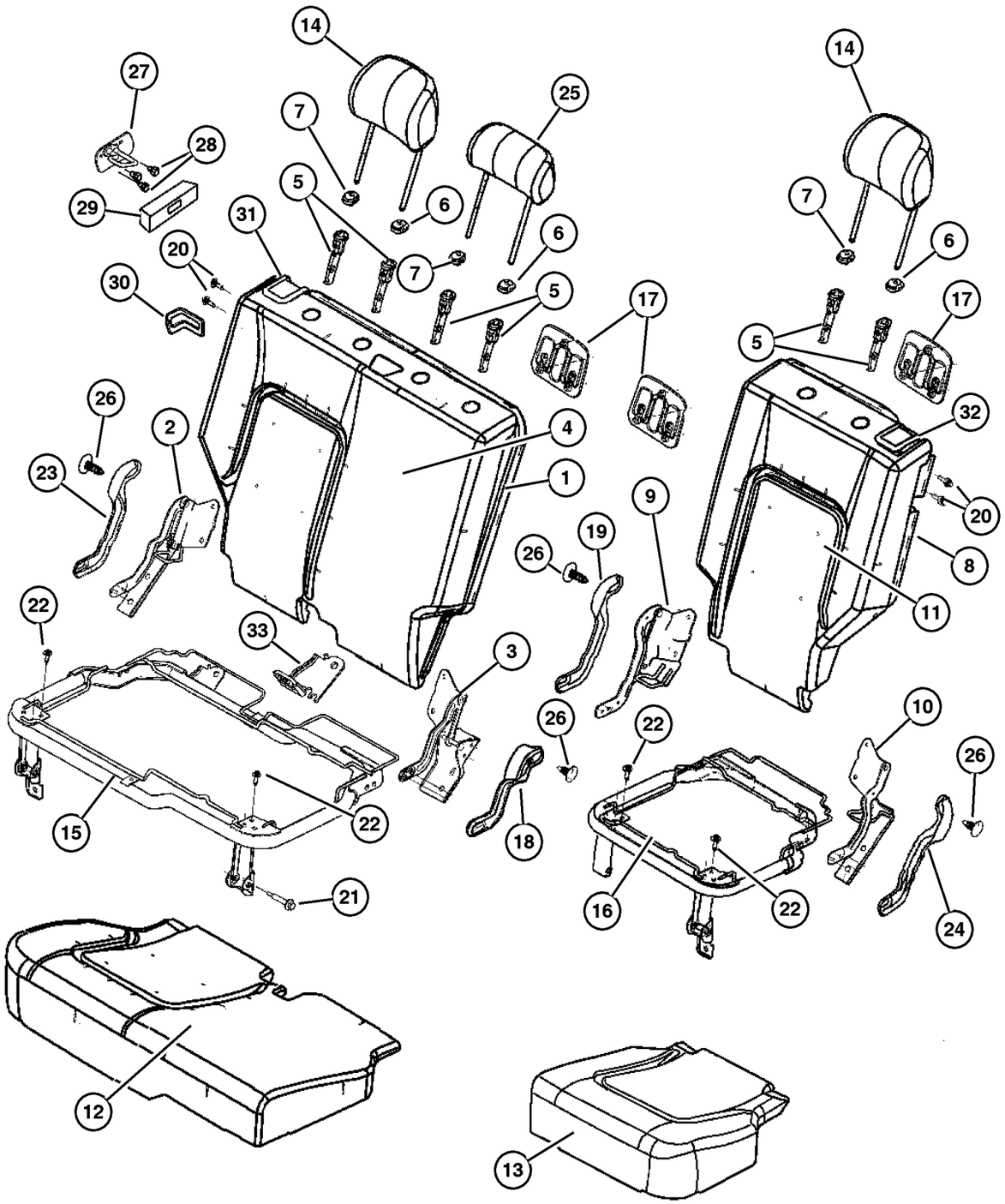

ITEM	PART NUMBER	QTY	LINE	SERIES	BODY	ENGINE	TRANS	TRIM	DESCRIPTION
1									SEAT BACK, Rear, 65%
	1BC76 1D5AA	1	J, U					B7	[D5]
	1BC76 1J3AA	1	J, U					B7	[J3]
2	5071 702AA	1	J, U					B7	BRACKET AND HINGE, Rear Seat Back, 65%, Right Outboard
3	5071 703AA	1	J, U					B7	BRACKET AND HINGE, Rear Seat Back, 65%, Right Inboard
4									COVER, Rear Seat Back, 65%
	1BC80 1D5AA	1	J, U					B7	[D5]
	1BC80 1J3AA	1	J, U					B7	[J3]
5	5066 017AA	2	J, U					B7	SLEEVE, Headrest
6									CAP, Headrest Adjuster, With Button
	WA46 1D5AA	1	J, U					B7	[D5]
	WA46 1J3AA	1	J, U					B7	[J3]
7									CAP, Headrest Adjuster, Without Button
	WA31 1D5AA	1	J, U					B7	[D5]
	WA31 1J3AA	1	J, U					B7	[J3]
8									SEAT BACK, Rear, 35%
	1BC75 1D5AA	1	J, U					B7	[D5]
	1BC75 1J3AA	1	J, U					B7	[J3]
9	5071 704AA	1	J, U					B7	BRACKET AND HINGE, Rear Seat Back, 35%, Left Inboard
10	5071 705AA	1	J, U					B7	BRACKET AND HINGE, Rear Seat Back, 35%, Left Outboard
11									COVER, Rear Seat Back, 35%
	1BC79 1D5AA	1	J, U					B7	[D5]
	1BC79 1J3AA	1	J, U					B7	[J3]
12									COVER AND PAD, Cushion, 65%
	1BC82 1D5AA	1	J, U					B7	[D5]
	1BC82 1J3AA	1	J, U					B7	[J3]
13									COVER AND PAD, Cushion, 35%
	1BC83 1D5AA	1	J, U					B7	[D5]
	1BC83 1J3AA	1	J, U					B7	[J3]
14									HEADREST, Rear
	1BC68 1D5AA	2	J, U					B7	[D5]
	1BC68 1J3AA	2	J, U					B7	[J3]
15	5072 112AA	1	J, U					B7	PANEL, Seat Cushion Base, 65%
16	5072 113AA	1	J, U					B7	PANEL, Seat Cushion Base, 35%
17									BEZEL, TETHER
	WB44 XDHAA	1	J, U					B7	[D5]
	WB44 ZJ8AA	1	J, U					B7	[J3]
18									COVER, Hinge

2006 Liberty (KJ)

SERIES	LINE	BODY	ENGINE	TRANSMISSION
H =HIGHLINE	T =JEEP - 2WD	74 =SPORT UTILITY 4-DR	EKG=3.7L V6 Eng.	DG6=4-Spd. Auto. 42RLE Trans.
M =MEDIUM	J =JEEP - 4WD		ENR=2.8L 4 Cyl Turbo Diesel Eng.	DGV=4-Spd. Auto. VLP Trans.
P =PREMIUM	U =JEEP - 4WD (RHD)		ENJ=2.5L 4 Cyl 16V Turbo Diesel Eng.	DGQ=5-Spd Auto. 5-45RFE Trans.
			ED1=2.4L 4 Cyl DOHC 16v SMPI Eng.	DEH=6-Speed Man. NSG370 Trans.
				DDD=5-Speed HD Man. Trans.
				DDK=5-Speed HD Man. Trans.

AR = Use as required - = Non illustrated part # = New this model year

Rear Seat, Trim Code [B7]
Figure IKJ-640

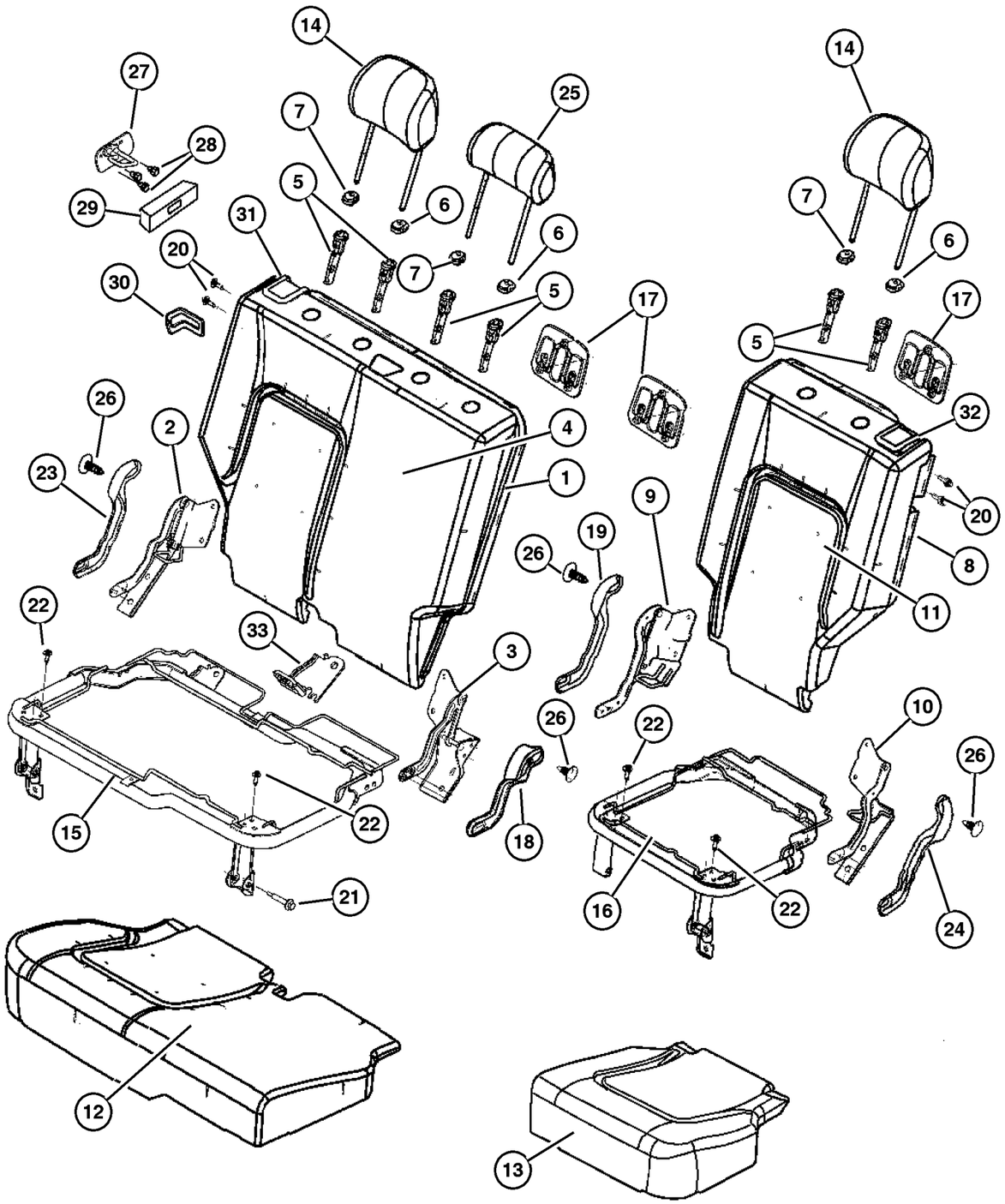

ITEM	PART NUMBER	QTY	LINE	SERIES	BODY	ENGINE	TRANS	TRIM	DESCRIPTION
	UZ45 1D5AA	1	J, U					B7	[D5] Right Inboard
	UZ45 1J3AA	1	J, U					B7	[J3] Right Inboard
19									COVER, Hinge
	UZ46 1D5AA	1	J, U					B7	[D5] Left Inboard
	UZ46 1J3AA	1	J, U					B7	[J3] Left Inboard
20	5072 520AA	2	J, U					B7	BOLT, Pivot
21	5072 519AA	1	J, U					B7	BOLT, Seat
22	4761 014	1	J, U					B7	BOLT, Cushion To Adjuster
23									COVER, Hinge
	UZ44 1D5AA	1	J, U					B7	[D5]
	UZ44 1J3AA	1	J, U					B7	[J3]
24									COVER, Hinge
	UZ47 1D5AA	1	J, U					B7	[D5]
	UZ47 1J3AA	1	J, U					B7	[J3]
25									HEADREST, Rear
	1BC69 1D5AA	1	J, U					B7	[D5]
	1BC69 1J3AA	1	J, U					B7	[J3]
26									PIN, Push
	WA51 1D5AA	2	J, U					B7	[D5]
	WA51 1J3AA	2	J, U					B7	[J3]
27									STRIKER, Seat Back Latch
	55352 816AC	1							Right
	55352 817AC	1							Left
28	6501 648	6							SCREW, Hex Flange Head, M8x1.25x25.00
29	55352 839AC	2							BEZEL, Seat Latch
30									BEZEL, Seat Latch
	WA92 XDHAA	1	J, U					B7	[D5]
	WA92 ZJ8AA	1	J, U					B7	[J3]
31									CONTROL, SEAT RELEASE, With Cable and Latch
	XF78 1D5AB	1	J, U					B7	[D5]
	XF78 1J3AB	1	J, U					B7	[J3]
32									CONTROL, SEAT RELEASE, With Latch
	XF79 1D5AB	1	J, U					B7	[D5]
	XF79 1J3AB	1	J, U					B7	[J3]
33	5134 366AA	1	J, U					B7	BRACKET, Child Tether Anchor

2006 Liberty (KJ)

SERIES	LINE	BODY	ENGINE	TRANSMISSION
H =HIGHLINE	T =JEEP - 2WD	74 =SPORT UTILITY 4-DR	EKG=3.7L V6 Eng.	DG6=4-Spd. Auto. 42RLE Trans.
M =MEDIUM	J =JEEP - 4WD		ENR=2.8L 4 Cyl Turbo Diesel Eng.	DGV=4-Spd. Auto. VLP Trans.
P =PREMIUM	U =JEEP - 4WD (RHD)		ENJ=2.5L 4 Cyl 16V Turbo Diesel Eng.	DGQ=5-Spd Auto. 5-45RFE Trans.
			ED1=2.4L 4 Cyl DOHC 16v SMPI Eng.	DEH=6-Speed Man. NSG370 Trans.
				DDD=5-Speed HD Man. Trans.
				DDK=5-Speed HD Man. Trans.

Rear Seat, Trim Code [J7]
Figure IKJ-650

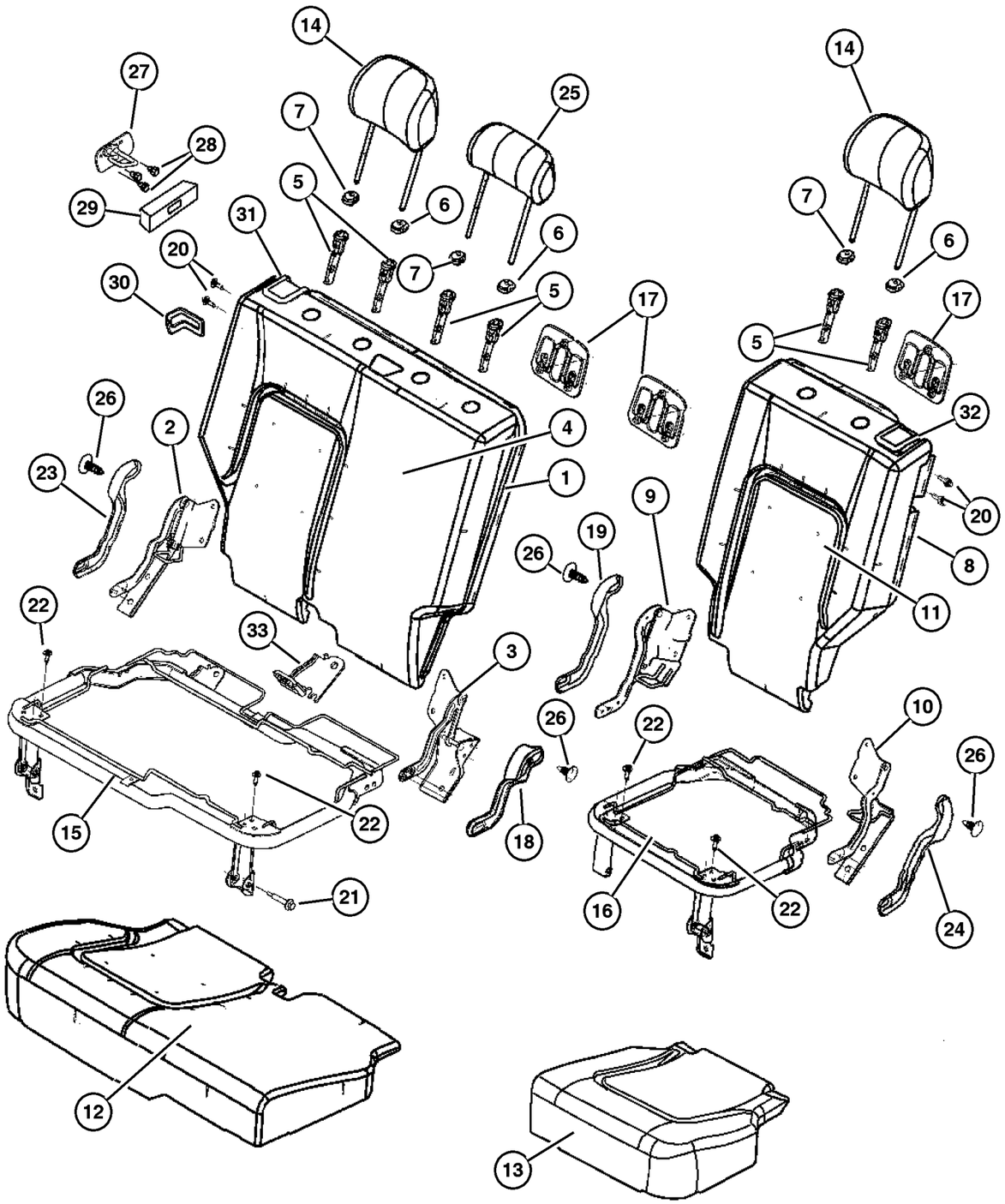

ITEM	PART NUMBER	QTY	LINE	SERIES	BODY	ENGINE	TRANS	TRIM	DESCRIPTION
1									SEAT BACK, Rear, 65%
	1BD20 1D5AA	1	J					J7	[D5]
	1BD20 1J3AA	1	J					J7	[J3]
2	5071 702AA	1	J					J7	BRACKET AND HINGE, Rear Seat Back, 65%, Right Outboard
3	5071 703AA	1	J					J7	BRACKET AND HINGE, Rear Seat Back, 65%, Right Inboard
4									COVER, Rear Seat Back, 65%
	1BD18 1D5AA	1	J					J7	[D5]
	1BD18 1J3AA	1	J					J7	[J3]
5	5066 017AA	2	J					J7	SLEEVE, Headrest
6									CAP, Headrest Adjuster, With Button
	WA46 1D5AA	1	J					J7	[D5]
	WA46 1J3AA	1	J					J7	[J3]
7									CAP, Headrest Adjuster, Without Button
	WA31 1D5AA	1	J					J7	[D5]
	WA31 1J3AA	1	J					J7	[J3]
8									SEAT BACK, Rear, 35%
	1BD17 1D5AA	1	J					J7	[D5]
	1BD17 1J3AA	1	J					J7	[J3]
9	5071 704AA	1	J					J7	BRACKET AND HINGE, Rear Seat Back, 35%, Left Inboard
10	5071 705AA	1	J					J7	BRACKET AND HINGE, Rear Seat Back, 35%, Left Outboard
11									COVER, Rear Seat Back, 35%
	1BD15 1D5AA	1	J					J7	[D5]
	1BD15 1J3AA	1	J					J7	[J3]
12									COVER AND PAD, Cushion, 65%
	1BD12 1D5AA	1	J					J7	[D5]
	1BD12 1J3AA	1	J					J7	[J3]
13									COVER AND PAD, Cushion, 35%
	1BD13 1D5AA	1	J					J7	[D5]
	1BD13 1J3AA	1	J					J7	[J3]
14									HEADREST, Rear
	1BC97 1D5AA	1	J					J7	[D5]
	1BC97 1J3AA	1	J					J7	[J3]
15	5072 112AA	1	J					J7	PANEL, Seat Cushion Base, 65%
16	5072 113AA	1	J					J7	PANEL, Seat Cushion Base, 35%
17									BEZEL, TETHER
	WB44 XDHAA	1	J					J7	[D5]
	WB44 ZJ8AA	1	J					J7	[J3]
18									COVER, Hinge

2006 Liberty (KJ)

SERIES
H =HIGHLINE
M =MEDIUM
P =PREMIUM

LINE
T =JEEP - 2WD
J =JEEP - 4WD
U =JEEP - 4WD (RHD)

BODY
74 =SPORT UTILITY 4-DR

ENGINE
EKG=3.7L V6 Eng.
ENR=2.8L 4 Cyl Turbo Diesel Eng.
ENJ=2.5L 4 Cyl 16V Turbo Diesel Eng.
ED1=2.4L 4 Cyl DOHC 16v SMPI Eng.

TRANSMISSION
DG6=4-Spd. Auto. 42RLE Trans.
DGV=4-Spd. Auto. VLP Trans.
DGQ=5-Spd Auto. 5-45RFE Trans.
DEH=6-Speed Man. NSG370 Trans.
DDD=5-Speed HD Man. Trans.
DDK=5-Speed HD Man. Trans.

Rear Seat, Trim Code [J7]
Figure IKJ-650

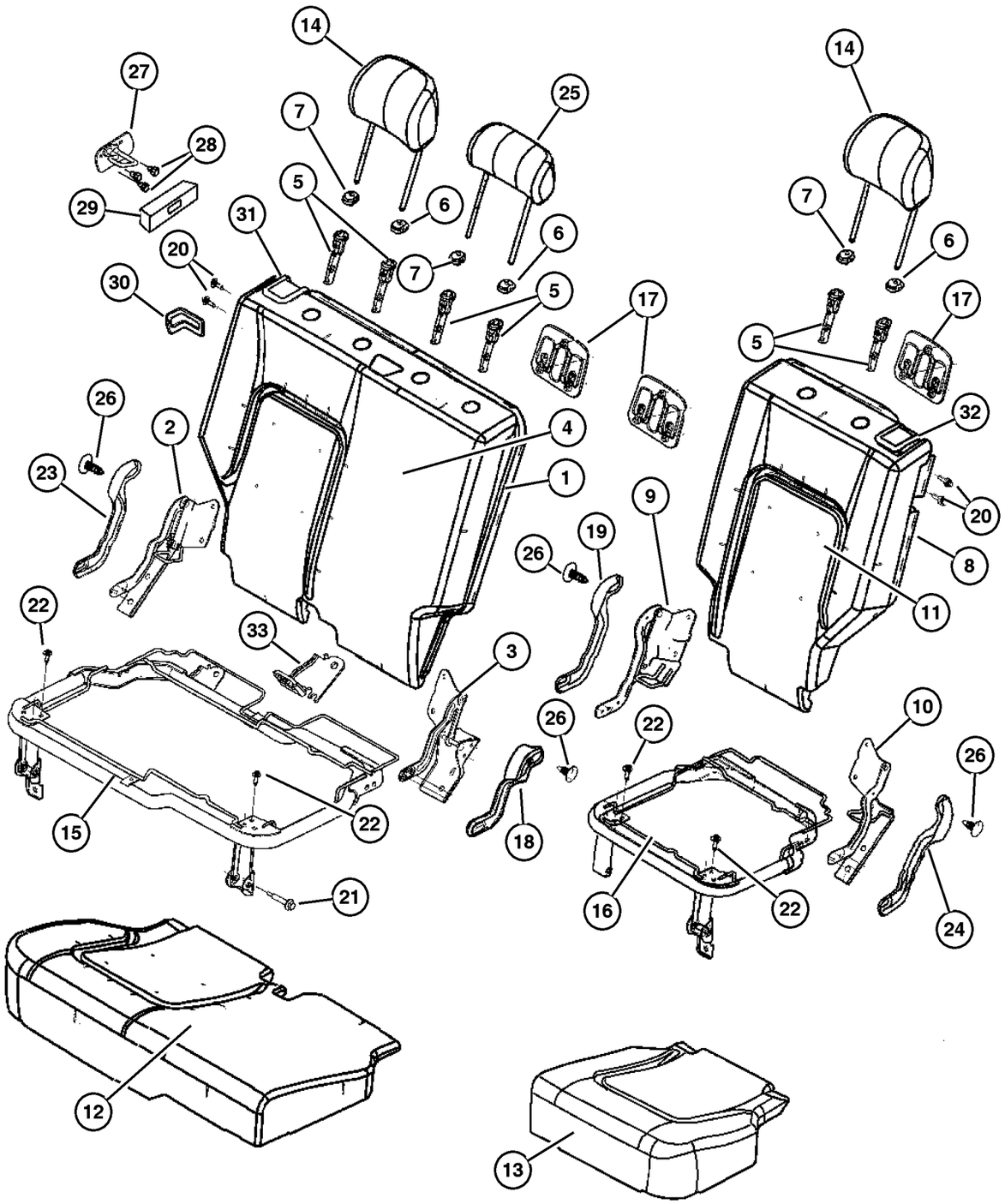

ITEM	PART NUMBER	QTY	LINE	SERIES	BODY	ENGINE	TRANS	TRIM	DESCRIPTION
	UZ45 1D5AA	1	J					J7	[D5] Right Inboard
	UZ45 1J3AA	1	J					J7	[J3] Right Inboard
19									COVER, Hinge
	UZ46 1D5AA	1	J					J7	[D5] Left Inboard
	UZ46 1J3AA	1	J					J7	[J3] Left Inboard
20	5072 520AA	2	J					J7	BOLT, Pivot
21	5072 519AA	1	J					J7	BOLT, Seat
22	4761 014	8	J, U					J7	BOLT, Cushion To Adjuster
23									COVER, Hinge
	UZ44 1D5AA	1	J					J7	[D5] Right Outboard
	UZ44 1J3AA	1	J					J7	[J3] Right Outboard
24									COVER, Hinge
	UZ47 1D5AA	1	J					J7	[D5] Left Outboard
	UZ47 1J3AA	1	J					J7	[J3] Left Outboard
25									HEADREST, Rear
	1BD02 1D5AA	1	J					J7	[D5]
	1BD02 1J3AA	1	J					J7	[J3]
26									PIN, Push
	WA51 1D5AA	1	J					J7	[D5]
	WA51 1J3AA	1	J					J7	[J3]
27									STRIKER, Seat Back Latch
	55352 816AC	1							Right
	55352 817AC	1							Left
28	6501 648	6							SCREW, Hex Flange Head, M8x1.25x25.00
29	55352 839AC	2							BEZEL, Seat Latch
30									BEZEL, Seat Latch
	WA92 1D5AA	1	J					J7	[D5]
	WA92 ZJ8AA	1	J					J7	[J3]
31									CONTROL, SEAT RELEASE, With Cable and Latch
	XF78 1D5AB	1	J					J7	[D5]
	XF78 1J3AB	1	J					J7	[J3]
32									CONTROL, SEAT RELEASE, With Latch
	XF79 1D5AB	1	J					J7	[D5]
	XF79 1J3AB	1	J					J7	[J3]
33	5134 366AA	1	J, U					J7	BRACKET, Child Tether Anchor

2006 Liberty (KJ)

SERIES	LINE	BODY	ENGINE	TRANSMISSION
H =HIGHLINE	T =JEEP - 2WD	74 =SPORT UTILITY 4-DR	EKG=3.7L V6 Eng.	DG6=4-Spd. Auto. 42RLE Trans.
M =MEDIUM	J =JEEP - 4WD		ENR=2.8L 4 Cyl Turbo Diesel Eng.	DGV=4-Spd. Auto. VLP Trans.
P =PREMIUM	U =JEEP - 4WD (RHD)		ENJ=2.5L 4 Cyl 16V Turbo Diesel Eng.	DGQ=5-Spd Auto. 5-45RFE Trans.
			ED1=2.4L 4 Cyl DOHC 16v SMPI Eng.	DEH=6-Speed Man. NSG370 Trans.
				DDD=5-Speed HD Man. Trans.
				DDK=5-Speed HD Man. Trans.

Rear Seat, Trim Code [L7]
Figure IKJ-660

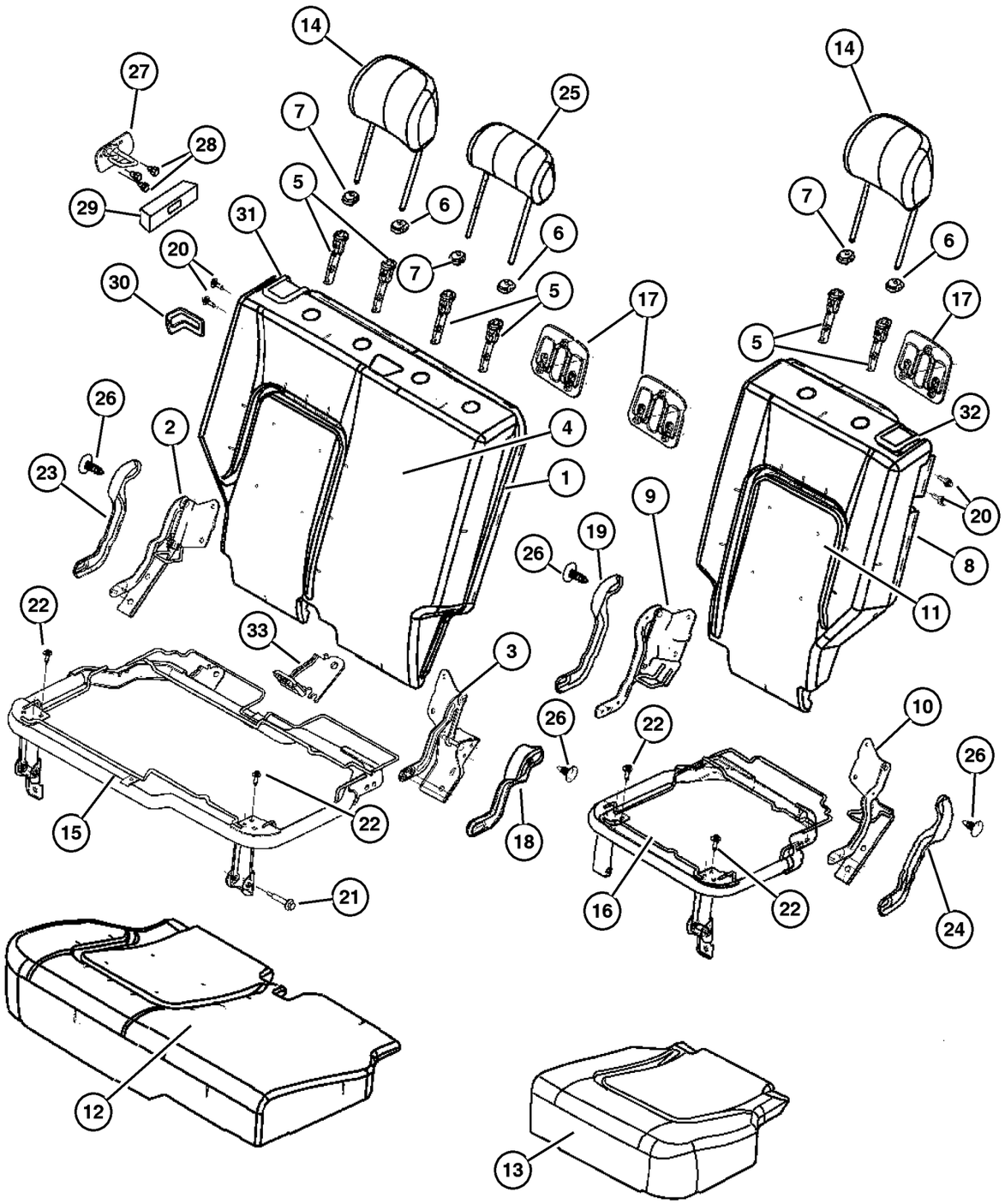

ITEM	PART NUMBER	QTY	LINE	SERIES	BODY	ENGINE	TRANS	TRIM	DESCRIPTION
1									SEAT BACK, Rear, 65%
	1BC98 1D5AA	1	J, T					L7	[D5]
	1BC98 1J3AA	1	J, T					L7	[J3]
	1BD00 1D5AA	1	J, U					L7	[D5]
	1BD00 1J3AA	1	J, U					L7	[J3]
2									BRACKET AND HINGE, Rear Seat Back, 65%
	5071 702AA	1	J, T					L7	Right Outboard
		1	J, U					L7	Right Outboard
3									BRACKET AND HINGE, Rear Seat Back, 65%
	5071 703AA	1	J, T					L7	Right Inboard
		1	J, U					L7	Right Inboard
4									COVER, Rear Seat Back, 65%
	1BC94 1D5AA	1	J, T					L7	[D5]
	1BC94 1J3AA	1	J, T					L7	[J3]
	1BC96 1D5AA	1	J, U					L7	[D5]
	1BC96 1J3AA	1	J, U					L7	[J3]
5									SLEEVE, Headrest
	5066 017AA	2	J, T					L7	
		2	J, U					L7	
6									CAP, Headrest Adjuster, With Button
	WA46 1D5AA	1	J, T					L7	[D5]
	WA46 1J3AA	1	J, T					L7	[J3]
	WA46 1D5AA	1	J, U					L7	[D5]
	WA46 1J3AA	1	J, U					L7	[J3]
7									CAP, Headrest Adjuster, Without Button
	WA31 1D5AA	1	J, T					L7	[D5]
	WA31 1J3AA	1	J, T					L7	[J3]
	WA31 1D5AA	1	J, U					L7	[D5]
	WA31 1J3AA	1	J, U					L7	[J3]
8									SEAT BACK, Rear, 35%
	1BC99 1D5AA	1	J, T					L7	[D5]
	1BC99 1J3AA	1	J, T					L7	[J3]
	1BC99 1D5AA	1	J, U					L7	[D5]
	1BC99 1J3AA	1	J, U					L7	[J3]
9									BRACKET AND HINGE, Rear Seat Back, 35%
	5071 704AA	1	J, T					L7	Left Inboard
		1	J, U					L7	Left Inboard
10									BRACKET AND HINGE, Rear Seat Back, 35%

2006 Liberty (KJ)

SERIES
H =HIGHLINE
M =MEDIUM
P =PREMIUM

LINE
T =JEEP - 2WD
J =JEEP - 4WD
U =JEEP - 4WD (RHD)

BODY
74 =SPORT UTILITY 4-DR

ENGINE
EKG=3.7L V6 Eng.
ENR=2.8L 4 Cyl Turbo Diesel Eng.
ENJ=2.5L 4 Cyl 16V Turbo Diesel Eng.
ED1=2.4L 4 Cyl DOHC 16v SMPI Eng.

TRANSMISSION
DG6=4-Spd. Auto. 42RLE Trans.
DGV=4-Spd. Auto. VLP Trans.
DGQ=5-Spd Auto. 5-45RFE Trans.
DEH=6-Speed Man. NSG370 Trans.
DDD=5-Speed HD Man. Trans.
DDK=5-Speed HD Man. Trans.

Rear Seat, Trim Code [L7]
Figure IKJ-660

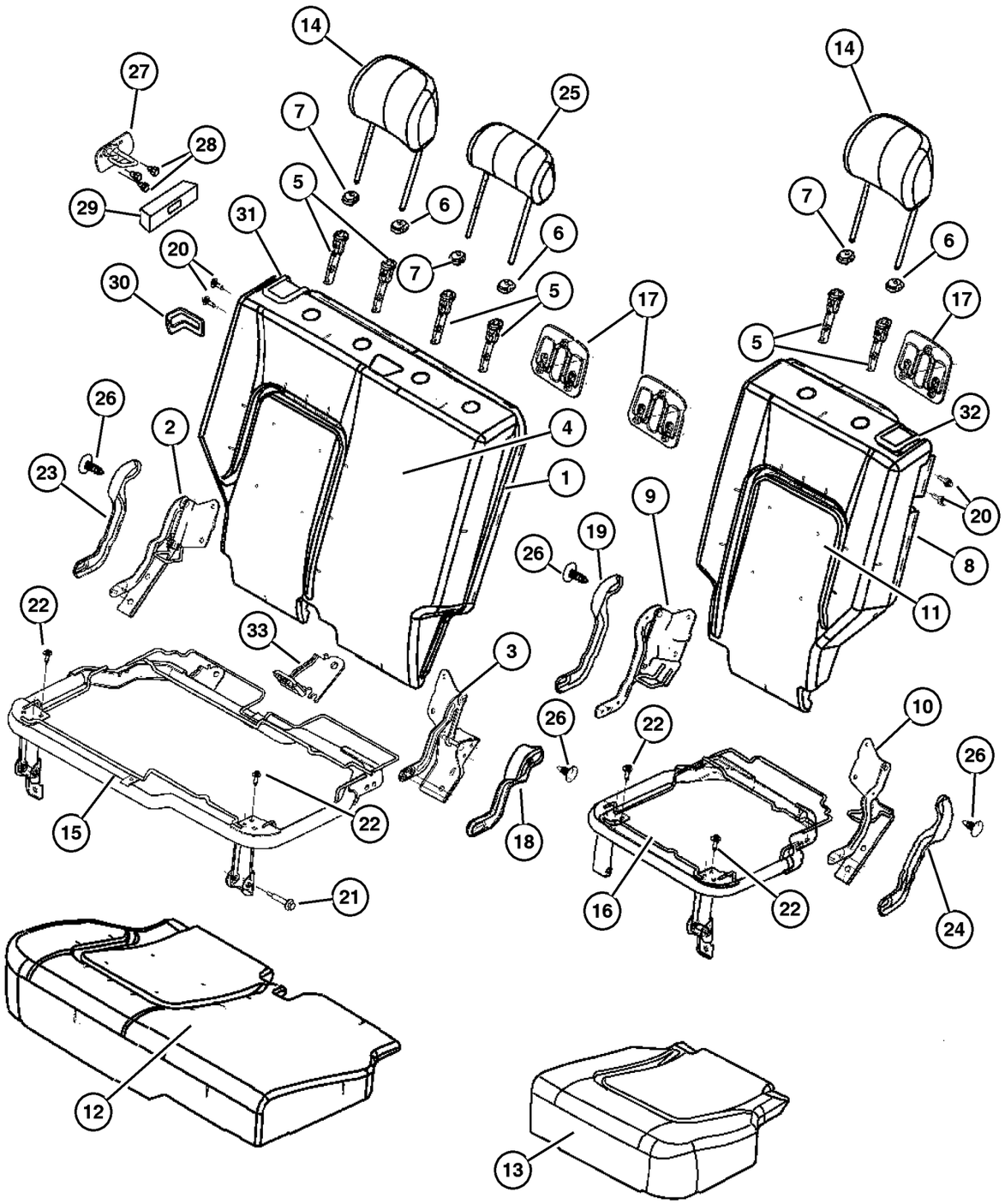

ITEM	PART NUMBER	QTY	LINE	SERIES	BODY	ENGINE	TRANS	TRIM	DESCRIPTION
	5071 705AA	1	J, T					L7	Left Outboard
		1	J, U					L7	Left Outboard
11									COVER, Rear Seat Back, 35%
	1BC95 1D5AA	1	J, T					L7	[D5]
	1BC95 1J3AA	1	J, T					L7	[J3]
	1BC95 1D5AA	1	J, U					L7	[D5]
	1BC95 1J3AA	1	J, U					L7	[J3]
12									COVER AND PAD, Cushion, 65%
	1BC92 1D5AA	1	J, T					L7	[D5]
	1BC92 1J3AA	1	J, T					L7	[J3]
	1BC92 1D5AA	1	J, U					L7	[D5]
	1BC92 1J3AA	1	J, U					L7	[J3]
13									COVER AND PAD, Cushion, 35%
	1BC93 1D5AA	1	J, T					L7	[D5]
	1BC93 1J3AA	1	J, T					L7	[J3]
	1BC93 1D5AA	1	J, U					L7	[D5]
	1BC93 1J3AA	1	J, U					L7	[J3]
14									HEADREST, Rear
	1BC85 1D5AA	2	J, T					L7	[D5]
	1BC85 1J3AA	2	J, T					L7	[J3]
	1BC85 1D5AA	2	J, U					L7	[D5]
	1BC85 1J3AA	2	J, U					L7	[J3]
15									PANEL, Seat Cushion Base, 65%
	5072 112AA	1	J, T					L7	
		1	J, U					L7	
16									PANEL, Seat Cushion Base, 35%
	5072 113AA	1	J, T					L7	
		1	J, U					L7	
17									BEZEL, TETHER
	WB44 XDHAA	2	J, T					L7	[D5]
	WB44 ZJ8AA	2	J, T					L7	[J3]
	WB44 XDHAA	1	J, U					L7	[D5]
	WB44 ZJ8AA	2	J, U					L7	[J3]
18									COVER, Hinge
	UZ45 1D5AA	1	J, T					L7	[D5] Right Inboard
	UZ45 1J3AA	1	J, T					L7	[J3] Right Inboard
	UZ45 1D5AA	1	J, U					L7	[D5] Right Inboard
	UZ45 1J3AA	1	J, U					L7	[J3] Right Inboard
19									COVER, Hinge
	UZ46 1D5AA	1	J, T					L7	[D5]
	UZ46 1J3AA	1	J, T					L7	[J3]
	UZ46 1D5AA	1	J, U					L7	[D5]

2006 Liberty (KJ)

SERIES	LINE	BODY	ENGINE	TRANSMISSION
H =HIGHLINE	T =JEEP - 2WD	74 =SPORT UTILITY 4-DR	EKG=3.7L V6 Eng.	DG6=4-Spd. Auto. 42RLE Trans.
M =MEDIUM	J =JEEP - 4WD		ENR=2.8L 4 Cyl Turbo Diesel Eng.	DGV=4-Spd. Auto. VLP Trans.
P =PREMIUM	U =JEEP - 4WD (RHD)		ENJ=2.5L 4 Cyl 16V Turbo Diesel Eng.	DGQ=5-Spd Auto. 5-45RFE Trans.
			ED1=2.4L 4 Cyl DOHC 16v SMPI Eng.	DEH=6-Speed Man. NSG370 Trans.
				DDD=5-Speed HD Man. Trans.
				DDK=5-Speed HD Man. Trans.

Rear Seat, Trim Code [L7]
Figure IKJ-660

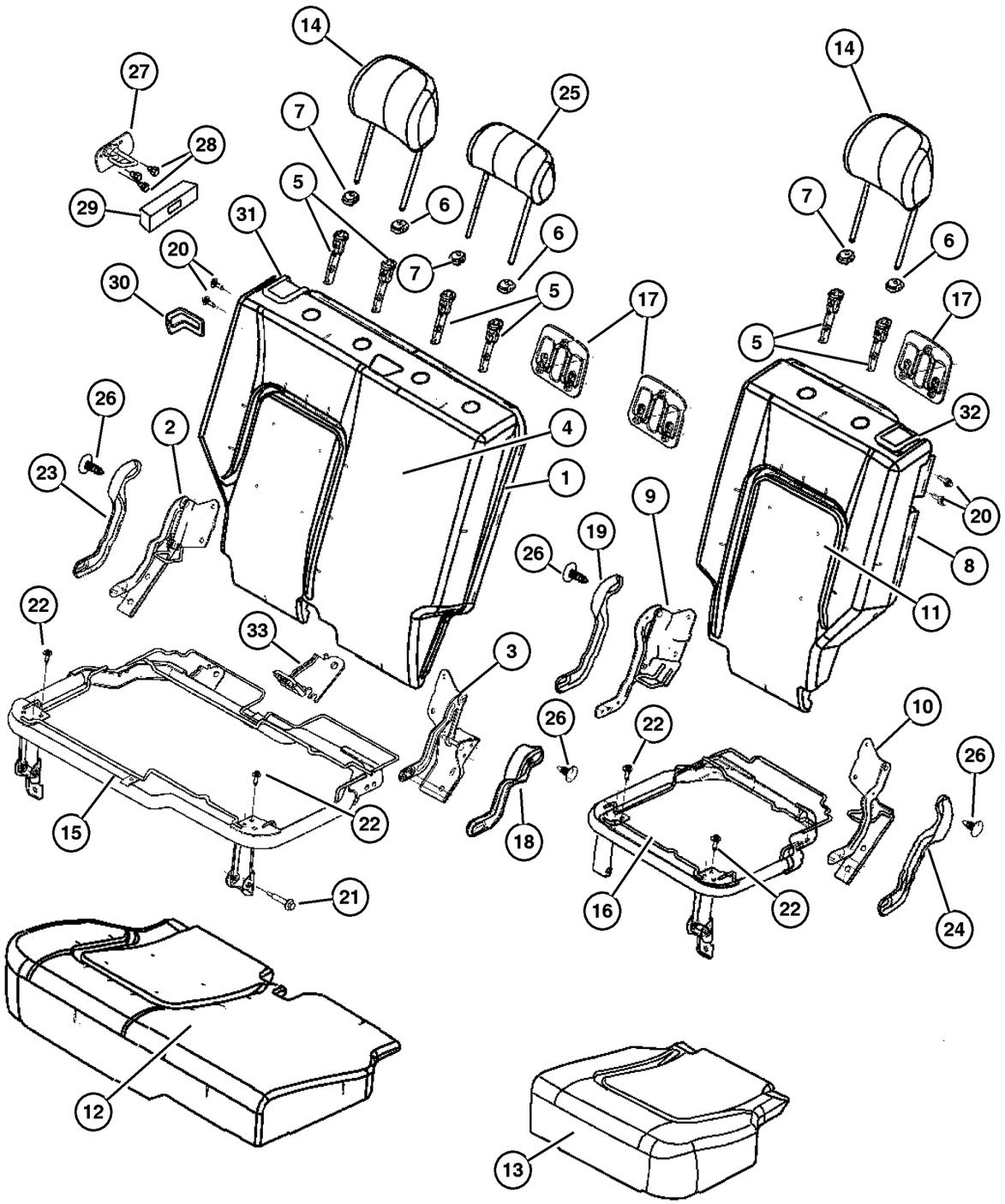

ITEM	PART NUMBER	QTY	LINE	SERIES	BODY	ENGINE	TRANS	TRIM	DESCRIPTION
	UZ46 1J3AA	1	J, U					L7	[J3]
20									BOLT, Pivot
	5072 520AA	2	J, T					L7	
		2	J, U					L7	
21									BOLT, Seat
	5072 519AA	1	J, T					L7	
		1	J, U					L7	
22									BOLT, Cushion To Adjuster
	4761 014	8	J, T					L7	
		8	J, U					L7	
23									COVER, Hinge
	UZ44 1D5AA	1	J, T					L7	[D5] Right Outboard
	UZ44 1J3AA	1	J, T					L7	[J3] Right Outboard
	UZ44 1D5AA	1	J, U					L7	[D5] Right Outboard
	UZ44 1J3AA	1	J, U					L7	[J3] Right Outboard
24									COVER, Hinge
	UZ47 1D5AA	1	J, T					L7	[D5] Left Outboard
	UZ47 1J3AA	1	J, T					L7	[J3] Left Outboard
	UZ47 1D5AA	1	J, U					L7	[D5] Left Outboard
	UZ47 1J3AA	1	J, U					L7	[J3] Left Outboard
25									HEADREST, Rear
	1BC81 1D5AA	1	J, U					L7	[D5]
	1BC81 1J3AA	1	J, U					L7	[J3]
26									PIN, Push
	WA51 1D5AA	1	J, T					L7	[D5]
	WA51 1J3AA	1	J, T					L7	[J3]
	WA51 1D5AA	1	J, U					L7	[D5]
	WA51 1J3AA	1	J, U					L7	[J3]
27									STRIKER, Seat Back Latch
	55352 816AC	1							Right
	55352 817AC	1							Left
28	6501 648	6							SCREW, Hex Flange Head, M8x1. 25x25.00
29	55352 839AC	2							BEZEL, Seat Latch
30									BEZEL, Seat Latch
	WA92 XDHAA	1	J, T					L7	[D5]
	WA92 ZJ8AA	1	J, T					L7	[J3]
	WA92 XDHAA	1	J, U					L7	[D5]
	WA92 ZJ8AA	1	J, U					L7	[J3]
31									CONTROL, SEAT RELEASE, With Cable and Latch
	XF78 1D5AB	1	J, T					L7	[D5]

2006 Liberty (KJ)

SERIES	LINE	BODY	ENGINE	TRANSMISSION
H =HIGHLINE	T =JEEP - 2WD	74 =SPORT UTILITY 4-DR	EKG=3.7L V6 Eng.	DG6=4-Spd. Auto. 42RLE Trans.
M =MEDIUM	J =JEEP - 4WD		ENR=2.8L 4 Cyl Turbo Diesel Eng.	DGV=4-Spd. Auto. VLP Trans.
P =PREMIUM	U =JEEP - 4WD (RHD)		ENJ=2.5L 4 Cyl 16V Turbo Diesel Eng.	DGQ=5-Spd Auto. 5-45RFE Trans.
			ED1=2.4L 4 Cyl DOHC 16v SMPI Eng.	DEH=6-Speed Man. NSG370 Trans.
				DDD=5-Speed HD Man. Trans.
				DDK=5-Speed HD Man. Trans.

Rear Seat, Trim Code [L7]
Figure IKJ-660

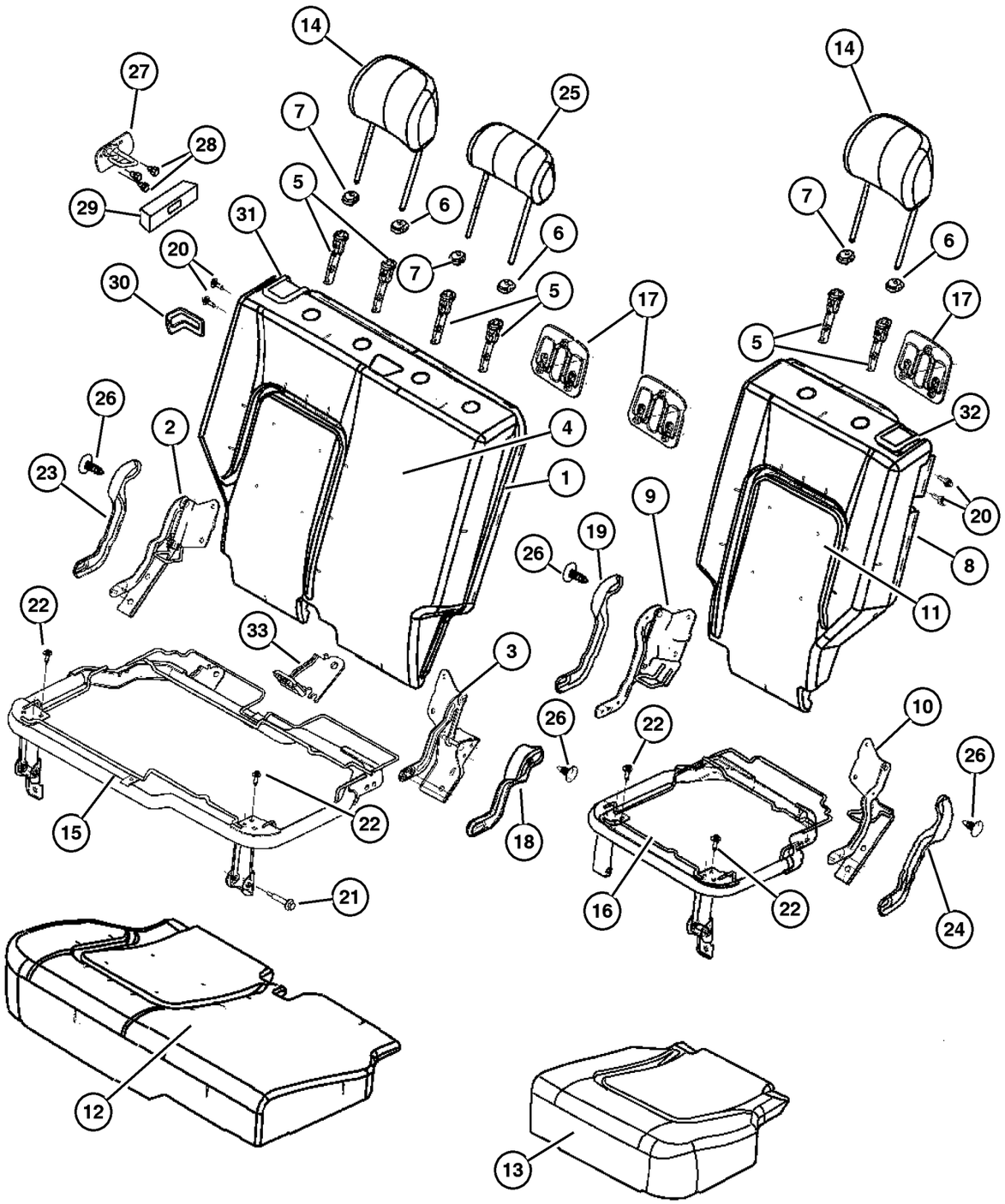

ITEM	PART NUMBER	QTY	LINE	SERIES	BODY	ENGINE	TRANS	TRIM	DESCRIPTION
	XF78 1J3AB	1	J, T					L7	[J3]
	XF78 1D5AB	1	J, U					L7	[D5]
	XF78 1J3AB	1	J, U					L7	[J3]
32									CONTROL, SEAT RELEASE, With Latch
	XF79 1D5AB	1	J, T					L7	[D5]
	XF79 1J3AB	1	J, T					L7	[J3]
	XF79 1D5AB	1	J, U					L7	[D5]
	XF79 1J3AB	1	J, U					L7	[J3]
33									BRACKET, Child Tether Anchor
	5134 366AA	1	J, T					N5	
		1	J, U					B7	

2006 Liberty (KJ)

SERIES	LINE	BODY	ENGINE	TRANSMISSION
H =HIGHLINE	T =JEEP - 2WD	74 =SPORT UTILITY 4-DR	EKG=3.7L V6 Eng.	DG6=4-Spd. Auto. 42RLE Trans.
M =MEDIUM	J =JEEP - 4WD		ENR=2.8L 4 Cyl Turbo Diesel Eng.	DGV=4-Spd. Auto. VLP Trans.
P =PREMIUM	U =JEEP - 4WD (RHD)		ENJ=2.5L 4 Cyl 16V Turbo Diesel Eng.	DGQ=5-Spd Auto. 5-45RFE Trans.
			ED1=2.4L 4 Cyl DOHC 16v SMPI Eng.	DEH=6-Speed Man. NSG370 Trans.
				DDD=5-Speed HD Man. Trans.
				DDK=5-Speed HD Man. Trans.

Seat Belts, Front
Figure IKJ-710

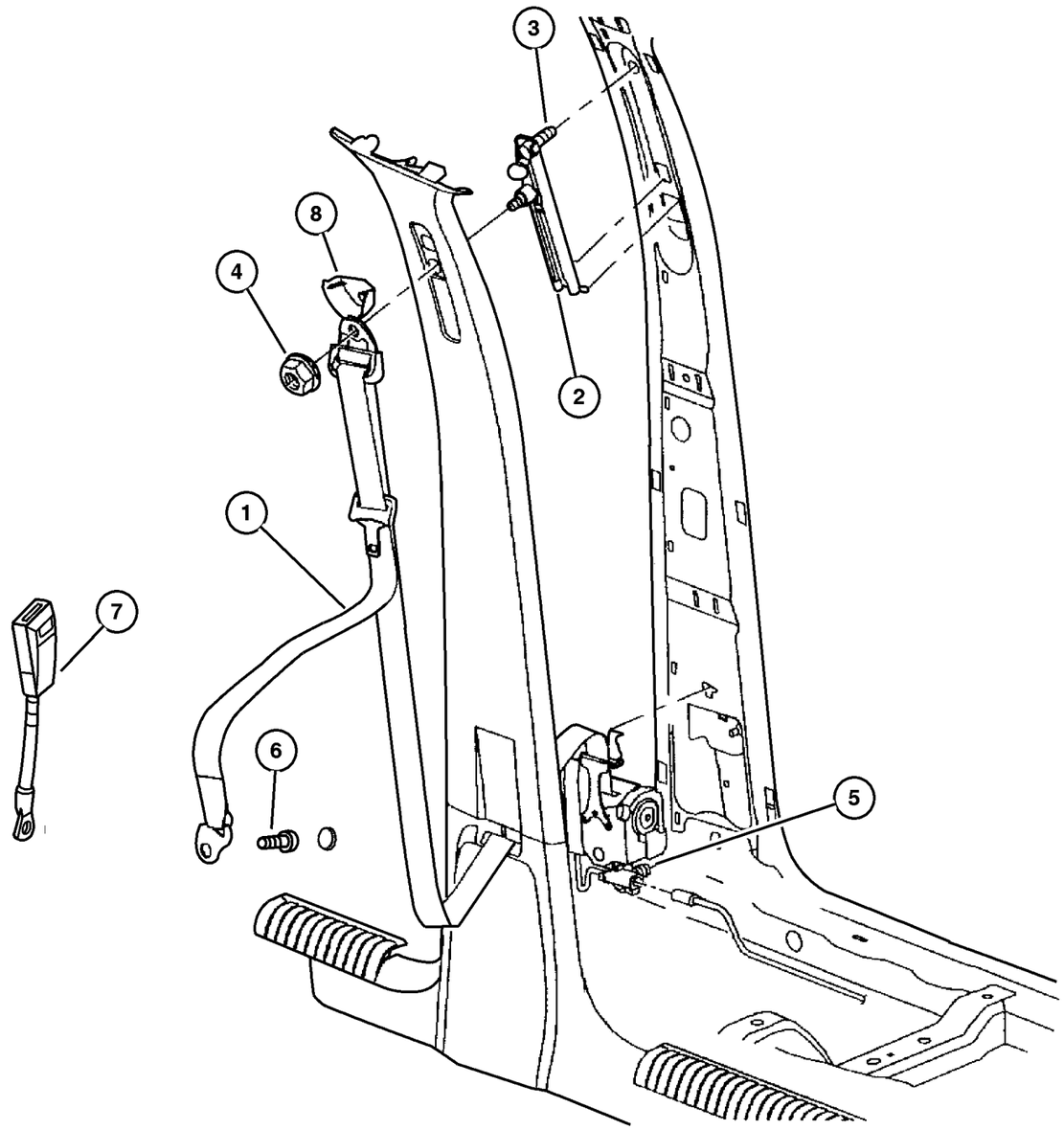

ITEM	PART NUMBER	QTY	LINE	SERIES	BODY	ENGINE	TRANS	TRIM	DESCRIPTION
1									SEAT BELT, Front Outer
	5GZ06 1X9AN	1	J, U					O0	Right,Export
	5GZ07 1X9AJ	1	J, U					O0	Left,Export
	5HG33 1D5AN	1	J, T					O0	[DB, D5], Left
	5HG33 1J3AN	1	J, T					O0	[J3], Left
	5HG34 1D5AJ	1	J, T					O0	[DB, D5],Mexico, Right
	5HG34 1J3AJ	1	J, T					O0	[J1],Mexico, Right
	5JL40 1D5AJ	1	J, T					O0	[DB, D5], Right
	5JL40 1J3AJ	1	J, T					O0	[J1], Right
2	55315 033AD	2							ADJUSTER, Seat Belt Turning Loop
3	6506 475AA	2							BOLT, Seat Belt
4	6506 002AA	2							NUT, M10x1.5
5	6505 867AA	2							SCREW, SEAT BELT
6									BOLT, Seat Belt
	6507 968AA	1	J, U					O0	
		1	J, T					O0	
7									SEAT BELT, Front Inner
	5JW10 1D5AB	1	J, T					B5	[D5], Passenger
	5JW10 1J3AB	1	J, T					B5	[J3], Passenger
	5JW77 1J3AB	1	J, T					B5	[J3], Driver
	5JW77 1D5AB	1	J, T					B5	[D5], Driver
	5JW77 1X9AB	1	J, U					B7	[J3], Driver and Passenger
		2	J, U					DL	[DB,J1],Export, Driver and Passenger
	5JW77 1J3AB	1	J, T					DL	[J1], Domestic, Driver
	5JW77 1D5AB	1	J, T					DL	[DB]. Domestic, Driver
	5JW10 1D5AB	1	J, T					DL	[DB]. Domestic, Passenger
	5JW10 1J3AB	1	J, T					DL	[J1], Domestic, Passenger
	5JW77 1D5AB	1	J, T					DL	[DB], Mexico, Driver
	5JW77 1J3AB	1	J, T					DL	[J1], Mexico, Driver
	5JW10 1D5AB	1	J, T					DL	[DB], Mexico, Passenger
	5JW10 1J3AA	1	J, T					DL	[J1], Mexico, Passenger
	5JW77 1X9AB	2	J, U					J7	[D5, J3],Export, Driver and Passenger
		1	J, U					L7	D5,J3], Driver and Passenger
	5JW77 1J3AB	1	J, T					L7	[J3], Driver
	5JW77 1D5AB	2	J, T					L7	[D5], Driver
	5JW10 1J3AB	1	J, T					L7	[J3], Passenger
	5JW10 1D5AB	1	J, T					L7	[D5], Passenger
		1	J, T					N5	[D5], Passenger
	5JW10 1J3AB	1	J, T					N5	[J3], Passenger
	5JW77 1D5AB	1	J, T					N5	[D5], Driver

2006 Liberty (KJ)

SERIES	LINE	BODY	ENGINE	TRANSMISSION
H =HIGHLINE	T =JEEP - 2WD	74 =SPORT UTILITY 4-DR	EKG=3.7L V6 Eng.	DG6=4-Spd. Auto. 42RLE Trans.
M =MEDIUM	J =JEEP - 4WD		ENR=2.8L 4 Cyl Turbo Diesel Eng.	DGV=4-Spd. Auto. VLP Trans.
P =PREMIUM	U =JEEP - 4WD (RHD)		ENJ=2.5L 4 Cyl 16V Turbo Diesel Eng.	DGQ=5-Spd Auto. 5-45RFE Trans.
			ED1=2.4L 4 Cyl DOHC 16v SMPI Eng.	DEH=6-Speed Man. NSG370 Trans.
				DDD=5-Speed HD Man. Trans.
				DDK=5-Speed HD Man. Trans.

AR = Use as required - = Non illustrated part # = New this model year

Seat Belts, Front
Figure IKJ-710

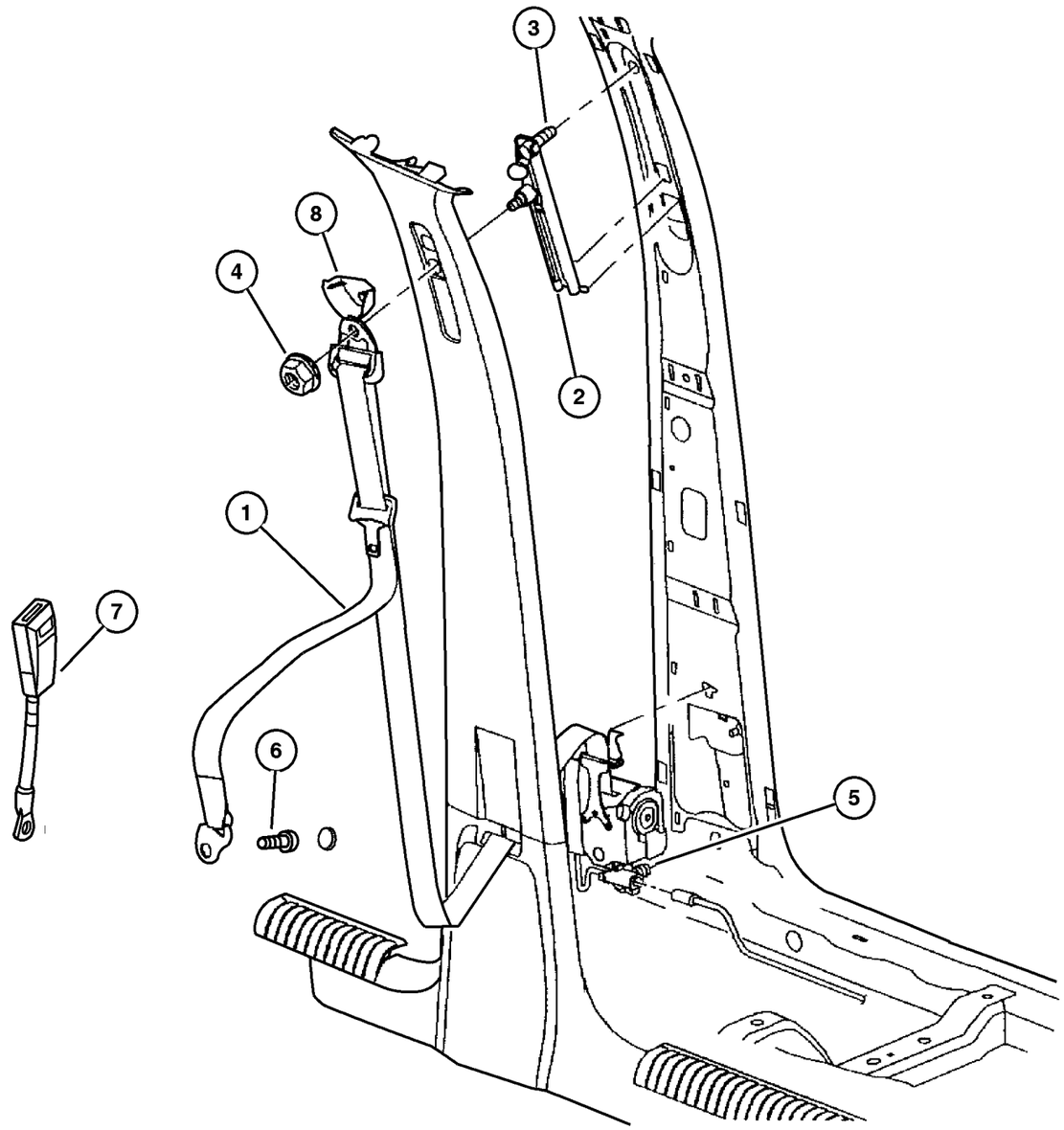

ITEM	PART NUMBER	QTY	LINE	SERIES	BODY	ENGINE	TRANS	TRIM	DESCRIPTION
	5JW77 1J3AB	1	J, T					N5	[J3], Driver
8	ZL81 1X9AA	1	J, U					O0	COVER, Seat Belt Turning Loop
-9									EXTENDER, Seat Belt
	5086 227AA-	1	J, T					O0	
		1	J, U					O0	

2006 Liberty (KJ)

SERIES	LINE	BODY	ENGINE	TRANSMISSION
H =HIGHLINE	T =JEEP - 2WD	74 =SPORT UTILITY 4-DR	EKG=3.7L V6 Eng.	DG6=4-Spd. Auto. 42RLE Trans.
M =MEDIUM	J =JEEP - 4WD		ENR=2.8L 4 Cyl Turbo Diesel Eng.	DGV=4-Spd. Auto. VLP Trans.
P =PREMIUM	U =JEEP - 4WD (RHD)		ENJ=2.5L 4 Cyl 16V Turbo Diesel Eng.	DGQ=5-Spd Auto. 5-45RFE Trans.
			ED1=2.4L 4 Cyl DOHC 16v SMPI Eng.	DEH=6-Speed Man. NSG370 Trans.
				DDD=5-Speed HD Man. Trans.
				DDK=5-Speed HD Man. Trans.

AR = Use as required - = Non illustrated part # = New this model year

Seat Belts, Rear
Figure IKJ-720

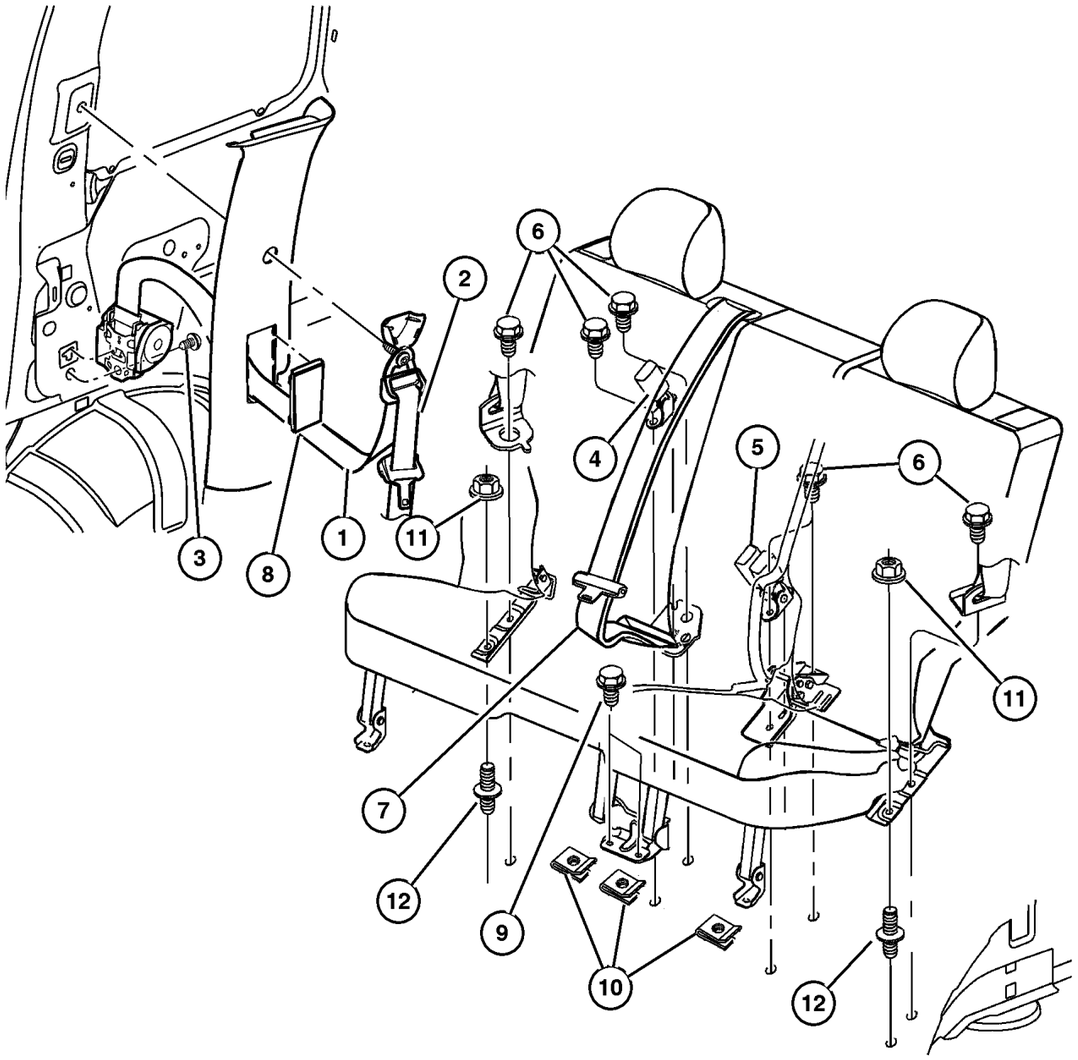

ITEM	PART NUMBER	QTY	LINE	SERIES	BODY	ENGINE	TRANS	TRIM	DESCRIPTION
1									SEAT BELT, Rear Outer
	5GE52 1X9AL	1	J, U					O0	Right,Export
	5GE53 1X9AL	1	J, U					O0	Left,Export
	5HG36 1D5AN	1	J, T					O0	[D5], Right
	5HG36 1J3AN	1	J, T					O0	[J1], Right
	5HG37 1D5AN	1	J, T					O0	[D5], Left
	5HG37 1J3AN	1	J, T					O0	[J1], Left
2									BOLT, Seat Belt
	6506 911AA	1	J, U					O0	
		1	J, T					O0	
3	6505 867AA	2							SCREW, SEAT BELT
4									SEAT BELT, Buckle Half
	5GU58 1D5AE	1	J, T					O0	[DB]
	5GU58 1J3AE	1	J, T					O0	[J1]
	5GU58 1X9AE	1	J, U					O0	Export
5									SEAT BELT, Two Buckles
	5GE49 1D5AE	1	J, T					O0	[DB]
	5GE49 1J3AE	1	J, T					O0	[J1]
	5GE49 1X9AE	1	J, U					O0	Export
6	6506 791AA	6							SCREW, Seat
7									SEAT BELT, RR CNTR SHOULDER
	5HK44 1J3AD	1	J, T					B5	[J3]
	5HK44 1D5AD	1	J, T					B5	[D5]
	5GE48 1D5AE	1	J, U					B7	[D5]
	5GE48 1J3AF	1	J, U					B7	[J3]
	5GE48 1D1AE	1	J, U					DL	[J1], Export
	5GE48 1DBAF	1	J, U					DL	[DB], Export
	5HK44 1DBAD	1	J, T					DL	[DB]
	5HK44 1D1AD	1	J, T					DL	[J1]
	5GE48 1J3AE	1	J, U					J7	[J3]
	5GE48 1D5AF	1	J, U					J7	[D5]
		1	J					J7	[D5]
	5GE48 1D5AE	1	J, U					L7	[D5], Export
	5GE48 1J3AE	1	J, U					L7	[J3], Export
	5HK44 1D5AD	1	J, T					L7	[D5]
	5HK44 1J3AD	1	J, T					L7	[J3]
		1	J, T					N5	[J3]
	5HK44 1D5AD	1	J, T					N5	[D5]
8									COVER, C Pillar
	WR16 BD5AA	1						O0	[DB,D5], Right
	WR16 ZJ3AA	1						O0	[J1,J3], Right
	WR17 BD5AA	1						O0	[DB,D5], Left

2006 Liberty (KJ)

SERIES	LINE	BODY	ENGINE	TRANSMISSION
H =HIGHLINE	T =JEEP - 2WD	74 =SPORT UTILITY 4-DR	EKG=3.7L V6 Eng.	DG6=4-Spd. Auto. 42RLE Trans.
M =MEDIUM	J =JEEP - 4WD		ENR=2.8L 4 Cyl Turbo Diesel Eng.	DGV=4-Spd. Auto. VLP Trans.
P =PREMIUM	U =JEEP - 4WD (RHD)		ENJ=2.5L 4 Cyl 16V Turbo Diesel Eng.	DGQ=5-Spd Auto. 5-45RFE Trans.
			ED1=2.4L 4 Cyl DOHC 16v SMPI Eng.	DEH=6-Speed Man. NSG370 Trans.
				DDD=5-Speed HD Man. Trans.
				DDK=5-Speed HD Man. Trans.

AR = Use as required - = Non illustrated part # = New this model year

Seat Belts, Rear
Figure IKJ-720

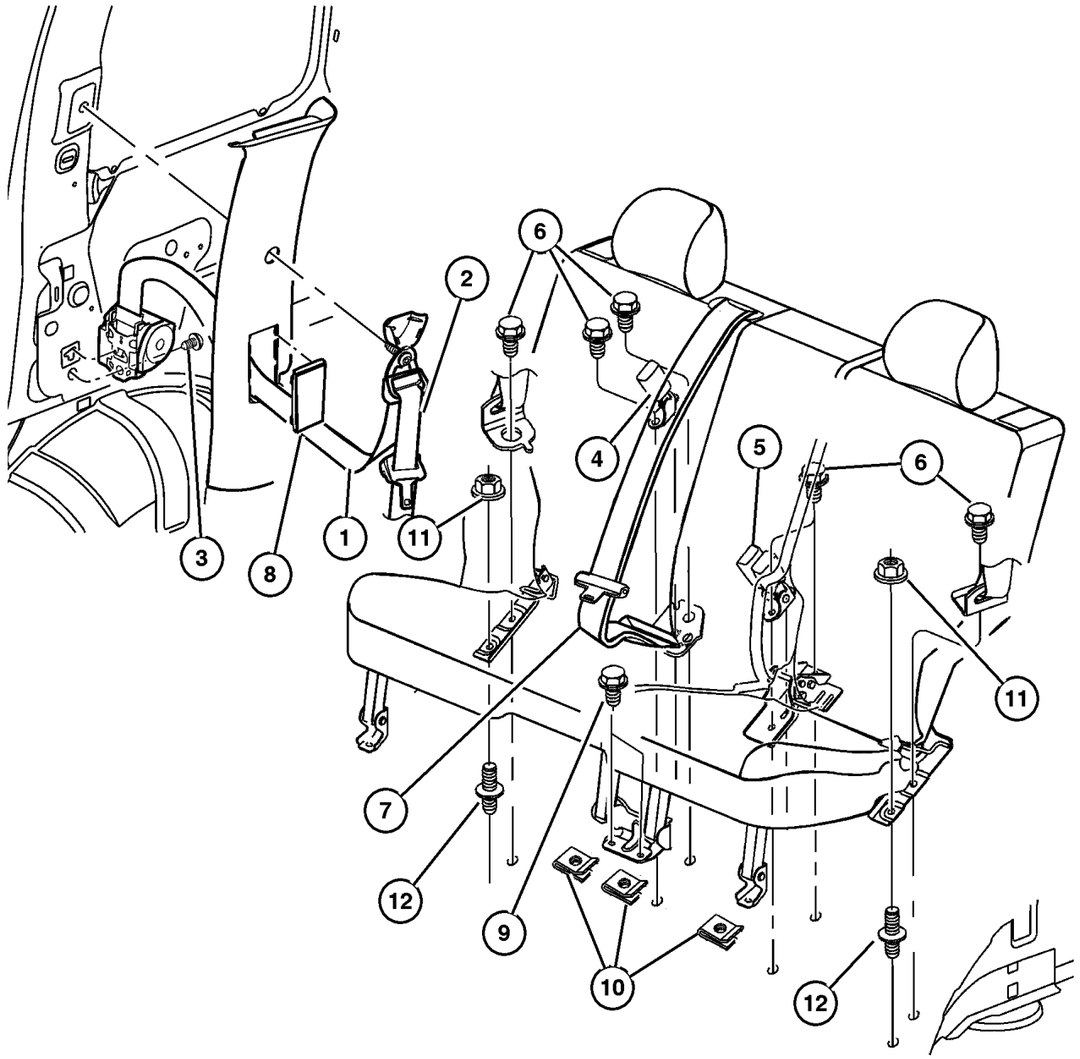

ITEM	PART NUMBER	QTY	LINE	SERIES	BODY	ENGINE	TRANS	TRIM	DESCRIPTION
	WR17 ZJ3AA	1						O0	[J1,J3], Left
9	6101 232	4							BOLT, Hex Flange Head, M8x1.25x25
10	6101 283	4							U-NUT, M8x1.25
11	6507 170AA	2							BOLT, Seat
12									STUD, M12x1.75x81.50, (NOT SERVICED) (Not Serviced)
-13									EXTENDER, Seat Belt
	5086 227AA-	1	J, U					O0	
		1	J, T					O0	

2006 Liberty (KJ)

SERIES	LINE	BODY	ENGINE	TRANSMISSION
H =HIGHLINE	T =JEEP - 2WD	74 =SPORT UTILITY 4-DR	EKG=3.7L V6 Eng.	DG6=4-Spd. Auto. 42RLE Trans.
M =MEDIUM	J =JEEP - 4WD		ENR=2.8L 4 Cyl Turbo Diesel Eng.	DGV=4-Spd. Auto. VLP Trans.
P =PREMIUM	U =JEEP - 4WD (RHD)		ENJ=2.5L 4 Cyl 16V Turbo Diesel Eng.	DGQ=5-Spd Auto. 5-45RFE Trans.
			ED1=2.4L 4 Cyl DOHC 16v SMPI Eng.	DEH=6-Speed Man. NSG370 Trans.
				DDD=5-Speed HD Man. Trans.
				DDK=5-Speed HD Man. Trans.

Recliner and Adjuster
Figure IKJ-810

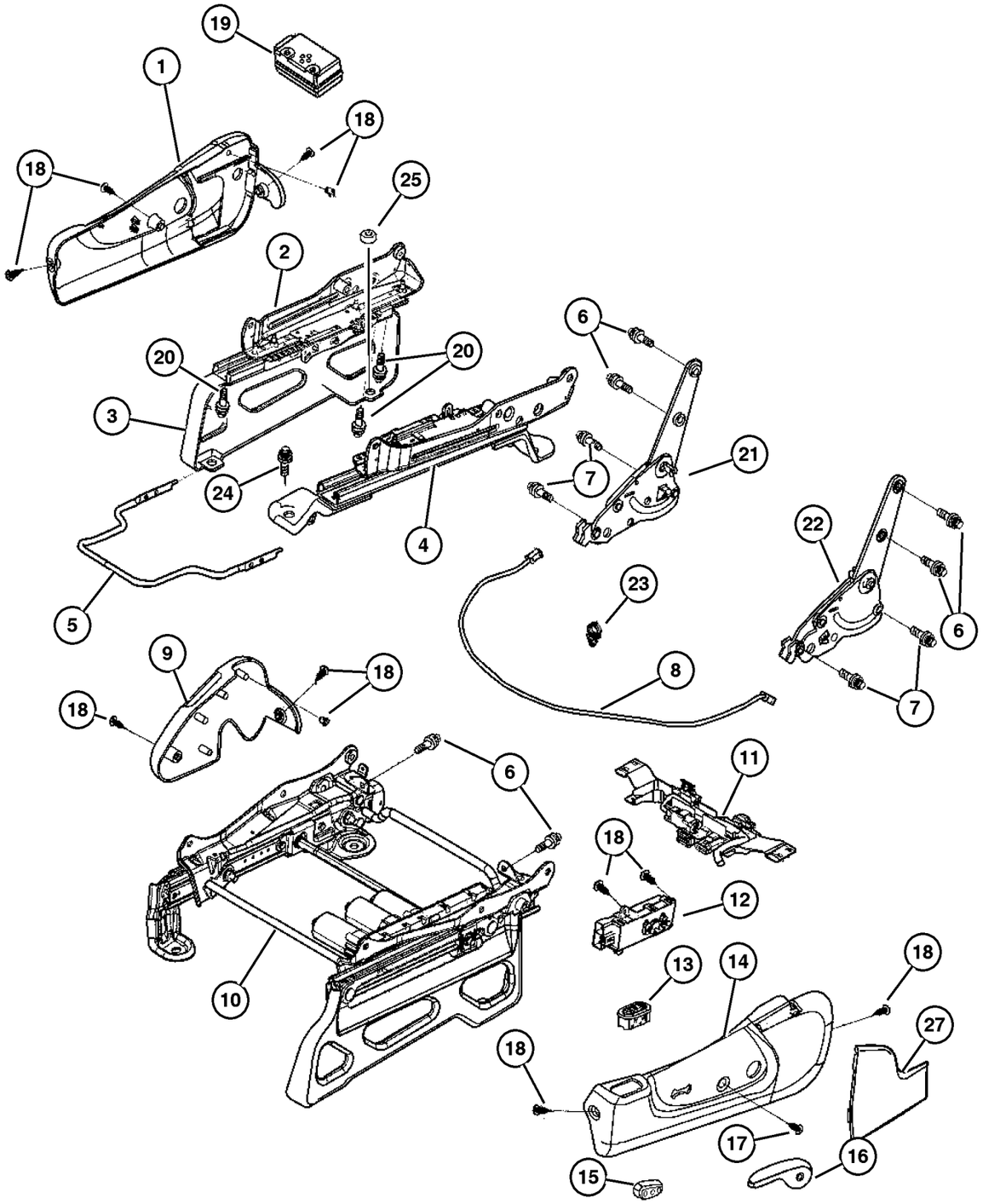

ITEM	PART NUMBER	QTY	LINE	SERIES	BODY	ENGINE	TRANS	TRIM	DESCRIPTION
1									SHIELD, Seat Adjuster, Manual Seat
	ZH78 1D5AA	1	J, T					N5	[D5], Right
		1	J, U					L7	[D5], Right
		1	J, T					L7	[D5], Right
		1	J, T					B5	[D5], Right
	ZH78 1J3AA	1	J, T					N5	[J3], Right
		1	J, T					B5	[J3], Right
		1	J, U					B7	[J3], Right
	ZH78 1D5AA	1	J, U					B7	[D5], Right
	ZH78 1J3AA	1	J, T					L7	[J3], Right
		1	J, U					L7	[J3], Right
		1	J, U					J7	[J3], Right
	ZH78 1D5AA	1	J, U					J7	[D5], Right
	ZH79 1D5AA	1	J, T					N5	[D5], Left
	ZH79 1J3AA	1	J, T					B5	[J3], Left
	ZH79 1D5AA	1	J, T					B5	[D5], Left
		1	J, U					L7	[D5], Left
		1	J, T					L7	[D5], Left
	ZH79 1J3AA	1	J, U					B7	[J3], Left
	ZH79 1D5AA	1	J, U					B7	[D5], Left
	ZH79 1J3AA	1	J, T					L7	[J3], Left
		1	J, T					N5	[J3], Left
		1	J, U					J7	[J3], Left
	ZH79 1D5AA	1	J, U					J7	[D5], Left
	ZH79 1J3AA	1	J, U					L7	[J3], Left
2									ADJUSTER, Manual Seat
	5072 107AB	1	J, T					B5	Driver
	5072 104AB	1	J, T					B5	Passenger
	5072 107AB	1	J, U					B7	Driver
	5072 104AB	1	J, U					B7	Passenger
	5072 107AB	1	J, U					J7	Driver
	5072 104AB	1	J					J7	Passenger
	5072 107AB	1	J, T					L7	Driver
	5072 104AB	1	J, U					L7	Passenger
	5072 107AB	1	J, U					L7	Driver
	5072 104AB	1	J, T					L7	Passenger
		1	J, T					N5	Passenger
	5072 107AB	1	J, T					N5	Driver
3									RISER, Seat
	5072 757AA	1	J, T					B5	Driver
	5072 756AA	1	J, T					B5	Passenger
		1	J, U					B7	Passenger

2006 Liberty (KJ)

SERIES	LINE	BODY	ENGINE	TRANSMISSION
H =HIGHLINE	T =JEEP - 2WD	74 =SPORT UTILITY 4-DR	EKG=3.7L V6 Eng.	DG6=4-Spd. Auto. 42RLE Trans.
M =MEDIUM	J =JEEP - 4WD		ENR=2.8L 4 Cyl Turbo Diesel Eng.	DGV=4-Spd. Auto. VLP Trans.
P =PREMIUM	U =JEEP - 4WD (RHD)		ENJ=2.5L 4 Cyl 16V Turbo Diesel Eng.	DGQ=5-Spd Auto. 5-45RFE Trans.
			ED1=2.4L 4 Cyl DOHC 16v SMPI Eng.	DEH=6-Speed Man. NSG370 Trans.
				DDD=5-Speed HD Man. Trans.
				DDK=5-Speed HD Man. Trans.

AR = Use as required - = Non illustrated part # = New this model year

Recliner and Adjuster
Figure IKJ-810

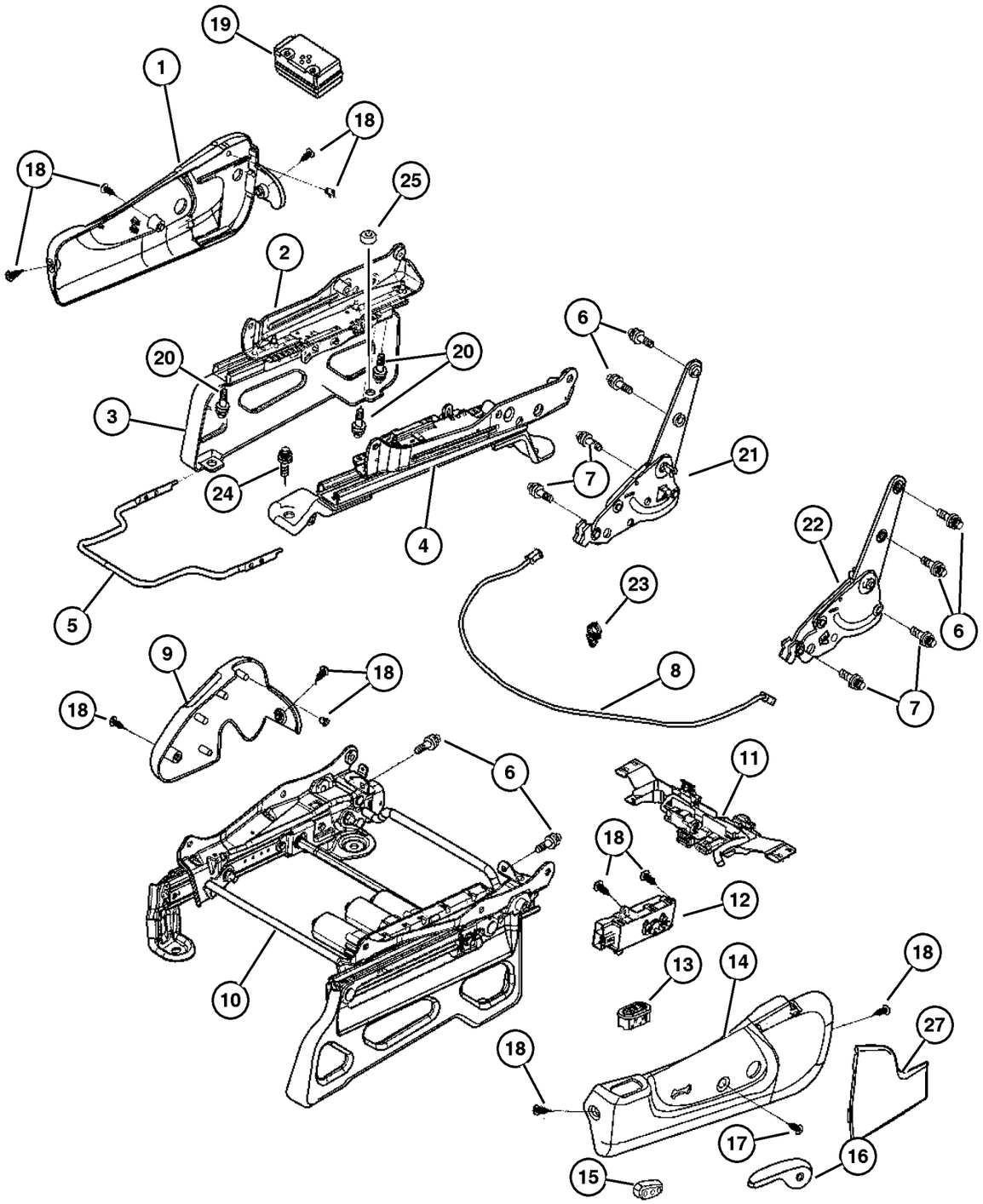

ITEM	PART NUMBER	QTY	LINE	SERIES	BODY	ENGINE	TRANS	TRIM	DESCRIPTION
	5072 757AA	1	J, U					B7	Driver
	5072 756AA	1	J, U					J7	Passenger
	5072 757AA	1	J, U					J7	Driver
	5072 756AA	1	J, T					N5	Passenger
	5072 757AA	1	J, T					N5	Driver
4									ADJUSTER, Manual Seat
	5072 105AA	1	J, T					B5	Passenger Inboard Manual
	5072 106AA	1	J, T					B5	Driver Inboard Manual
	5072 105AA	1	J, U					B7	Passenger Inboard Manual
	5072 106AA	1	J, U					B7	Driver Inboard Manual
		1	U					J7	Driver Inboard Manual
	5072 105AA	1	J					J7	Passenger Inboard Manual
		1	J, U					L7	Passenger Inboard Manual
	5072 106AA	1	J, U					L7	Driver Inboard Manual
	5072 105AA	1	J, T					L7	Passenger Inboard Manual
	5072 106AA	1	J, T					L7	Driver Inboard Manual
		1	J, T					N5	Driver Inboard Manual
	5072 105AA	1	J, T					N5	Passenger Inboard Manual
5									HANDLE, Towel Bar
	5072 003AA	1	J, T					B5	
		2	J, U					B7	
		1	J					J7	
		1	J, T					L7	
		2	J, U					J7	
		1	J, T					N5	
6									BOLT, Recliner
	5072 128AA	8	J, T					N5	
		8	J, T					B5	
		8	J, T					L7	
		8	J, T					DL	
		8	J, U					B7	
		8	J, U					J7	
		8	J, U					L7	
		8	J, U					DL	
7									BOLT, Recliner
	5093 647AA	8	J, T					N5	
		8	J, T					B5	
		8	J, T					L7	
		8	J, T					DL	
		8	J, U					B7	
		8	J, U					J7	
		8	J, U					L7	

2006 Liberty (KJ)

SERIES	LINE	BODY	ENGINE	TRANSMISSION
H =HIGHLINE	T =JEEP - 2WD	74 =SPORT UTILITY 4-DR	EKG=3.7L V6 Eng.	DG6=4-Spd. Auto. 42RLE Trans.
M =MEDIUM	J =JEEP - 4WD		ENR=2.8L 4 Cyl Turbo Diesel Eng.	DGV=4-Spd. Auto. VLP Trans.
P =PREMIUM	U =JEEP - 4WD (RHD)		ENJ=2.5L 4 Cyl 16V Turbo Diesel Eng.	DGQ=5-Spd Auto. 5-45RFE Trans.
			ED1=2.4L 4 Cyl DOHC 16v SMPI Eng.	DEH=6-Speed Man. NSG370 Trans.
				DDD=5-Speed HD Man. Trans.
				DDK=5-Speed HD Man. Trans.

AR = Use as required - = Non illustrated part # = New this model year

Recliner and Adjuster
Figure IKJ-810

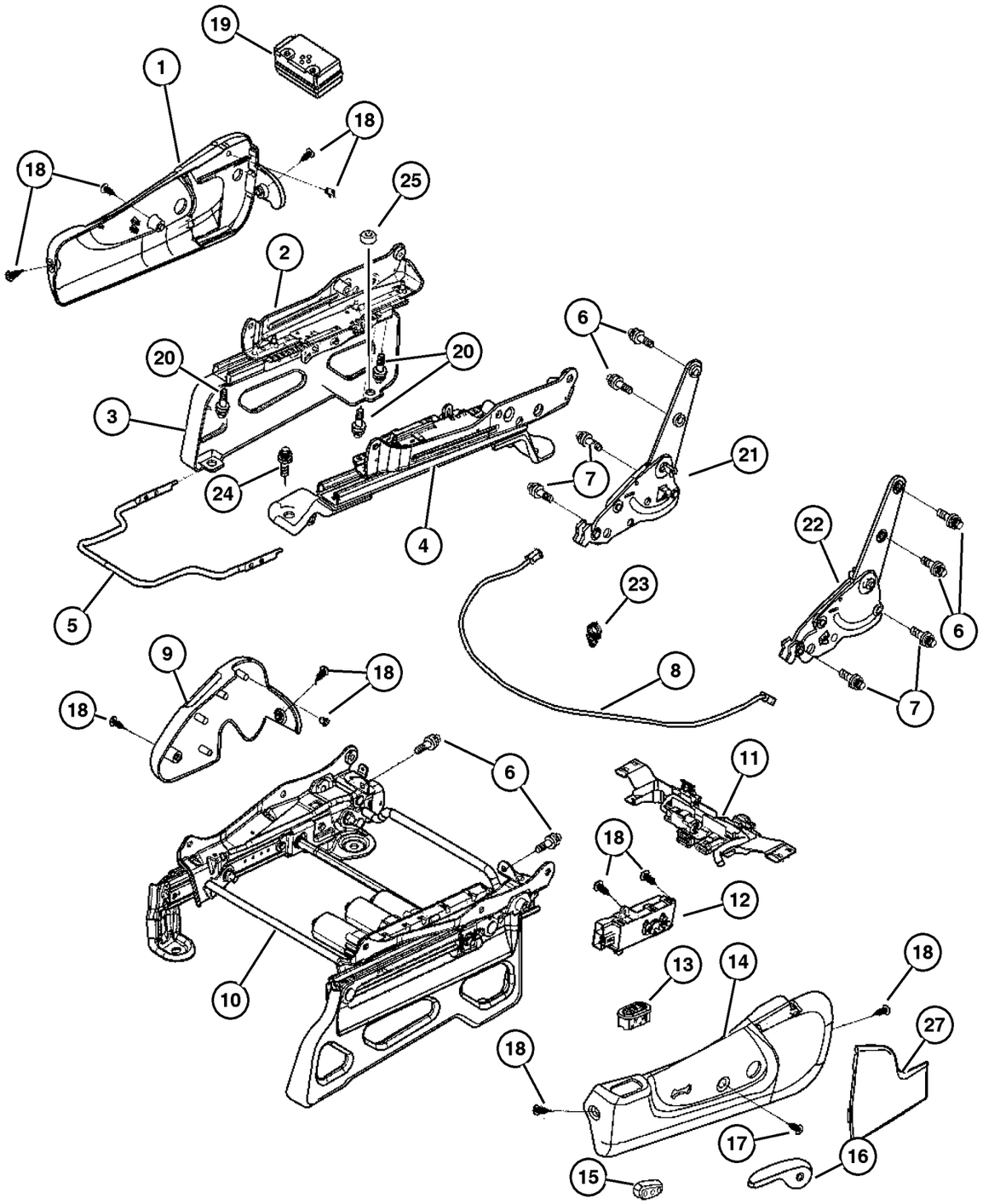

ITEM	PART NUMBER	QTY	LINE	SERIES	BODY	ENGINE	TRANS	TRIM	DESCRIPTION
		8	J, U					DL	
8									CABLE, Recliner
	5127 463AA	2	J, T					B5	
		2	J, T					L7	
		2	J, T					DL	
		2	J, T					N5	
		2	J, U					B7	
		2	J, U					J7	
		2	J, U					L7	
		2	J, U					DL	
9									SHIELD, Seat Adjuster
	UZ42 1D5AA	1	J, T					B5	[D5] Passenger Inboard
	UZ42 1J3AA	1	J, T					B5	[J3] Passenger Inboard
	UZ43 1J3AA	1	J, T					B5	[J3] Driver Inboard
	UZ43 1D5AA	1	J, T					B5	[D5] Driver Inboard
	UZ42 1J3AA	1	J, U					B7	[J3] Passenger Inboard
	UZ43 1J3AA	1	J, U					B7	[J3] Driver Inboard
	UZ42 1D5AA	1	J, U					B7	[D5] Passenger Inboard
	UZ43 1D5AA	1	J, U					B7	[D5] Driver Inboard
	UZ43 1D1AA	1	J, T					DL	[J1] Driver Inboard
		1	J, U					DL	[J1] Driver Inboard
	UZ42 1DBAA	1	J, U					DL	[DB] Passenger Inboard
		1	J, T					DL	[DB] Passenger Inboard
	UZ43 1DBAA	1	J, T					DL	[DB] Driver Inboard
		1	J, U					DL	[DB] Driver Inboard
	UZ42 1D1AA	1	J, T					DL	[J1] Passenger Inboard
		1	J, U					DL	[J1] Passenger Inboard
	UZ42 1J3AA	1	J					J7	[J3] Passenger Inboard
	UZ43 1D5AA	1	J					J7	[D5] Driver Inboard
	UZ42 1D5AA	1	J					J7	[D5] Passenger Inboard
	UZ43 1J3AA	1	J, U					J7	[J3] Driver Inboard
	UZ42 1J3AA	1	J, U					L7	[J3] Passenger Inboard
	UZ43 1D5AA	1	J, T					L7	[D5] Driver Inboard
	UZ42 1J3AA	1	J, T					L7	[J3] Passenger Inboard
	UZ42 1D5AA	1	J, U					L7	[D5] Passenger Inboard
	UZ43 1J3AA	1	J, U					L7	[J3] Driver Inboard
	UZ42 1D5AA	1	J, T					L7	[D5] Passenger Inboard
	UZ43 1D5AA	1	J, U					L7	[D5] Driver Inboard
	UZ43 1J3AA	1	J, T					L7	[J3] Driver Inboard
		1	J, T					N5	[J3] Driver Inboard
	UZ42 1J3AA	1	J, T					N5	[J3] Passenger Inboard
	UZ42 1D5AA	1	J, T					N5	[D5] Passenger Inboard

2006 Liberty (KJ)

SERIES	LINE	BODY	ENGINE	TRANSMISSION
H =HIGHLINE	T =JEEP - 2WD	74 =SPORT UTILITY 4-DR	EKG=3.7L V6 Eng.	DG6=4-Spd. Auto. 42RLE Trans.
M =MEDIUM	J =JEEP - 4WD		ENR=2.8L 4 Cyl Turbo Diesel Eng.	DGV=4-Spd. Auto. VLP Trans.
P =PREMIUM	U =JEEP - 4WD (RHD)		ENJ=2.5L 4 Cyl 16V Turbo Diesel Eng.	DGQ=5-Spd Auto. 5-45RFE Trans.
			ED1=2.4L 4 Cyl DOHC 16v SMPI Eng.	DEH=6-Speed Man. NSG370 Trans.
				DDD=5-Speed HD Man. Trans.
				DDK=5-Speed HD Man. Trans.

Recliner and Adjuster
Figure IKJ-810

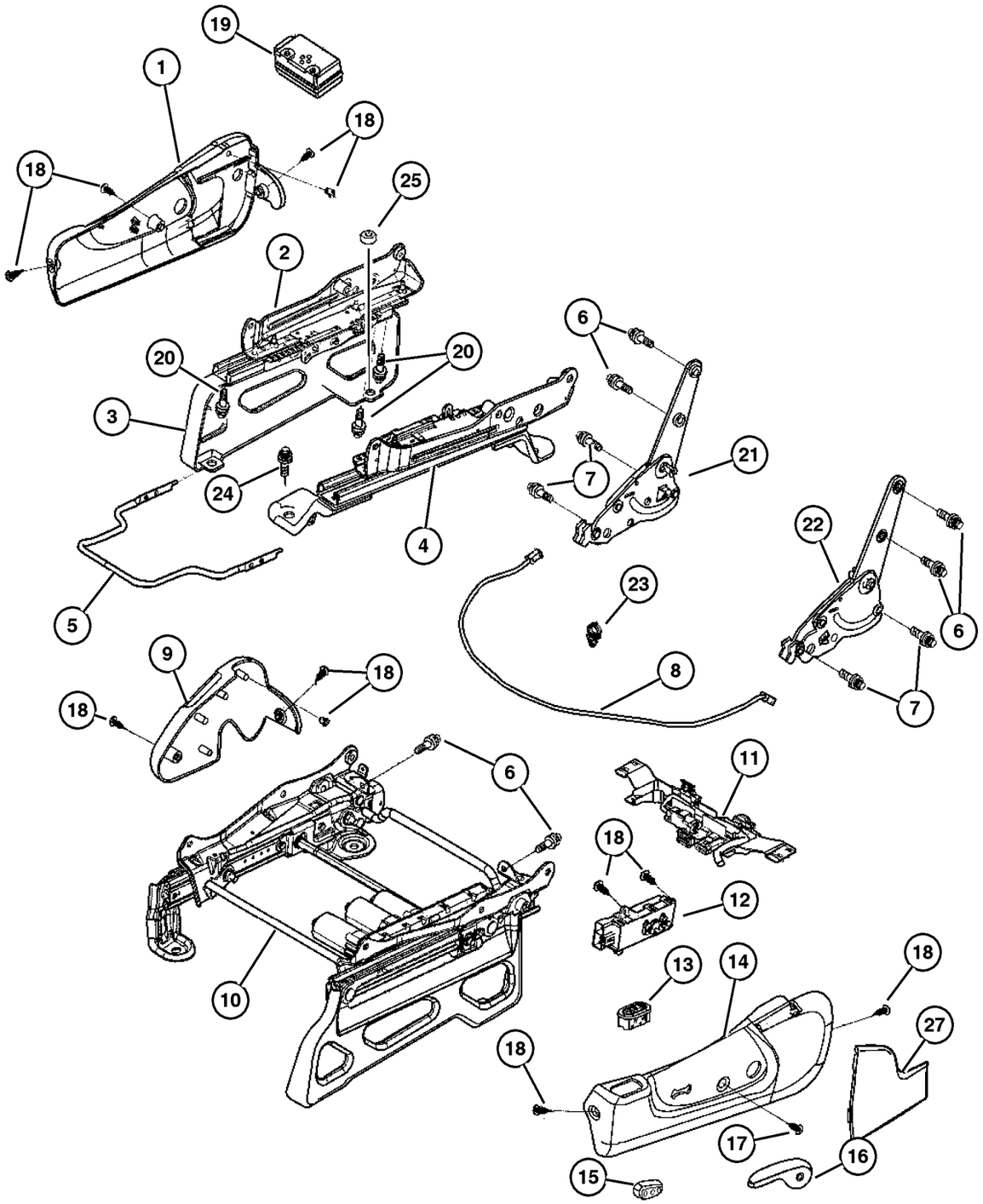

ITEM	PART NUMBER	QTY	LINE	SERIES	BODY	ENGINE	TRANS	TRIM	DESCRIPTION
	UZ43 1D5AA	1	J, T					N5	[D5] Driver Inboard
10									ADJUSTER, Power Seat
	WZ35 ZJ8AA	1	J, T					B5	Driver
	WZ34 ZJ8AA	1	J, U					DL	[J1], Passenger
		1	J, T					DL	[J1], Passenger
	WZ34 XDHAA	1	J, T					DL	[DB], Passenger
		1	J, U					DL	[DB], Passenger
	WZ35 ZJ8AA	1	J, U					DL	[J1], Driver
		1	J, T					DL	[J1], Driver
	WZ35 XDHAA	1	J, T					DL	[DB], Driver
		1	J, U					DL	[DB], Driver
	WZ35 ZJ8AA	1	J					J7	[J3], Driver
	WZ34 ZJ8AA	1	J, U					J7	[J3], Passenger
		1	J, U					L7	[J3], Passenger
	WZ35 XDHAA	1	J, U					L7	[D5], Driver
		1	J, T					L7	[D5], Driver
	WZ35 ZJ8AA	1	J, T					L7	[J3], Driver
		1	J, U					L7	[J3], Driver
	WZ34 XDHAA	1	J, U					L7	[D5], Passenger
	WZ35 XDHAA	1	J, T					N5	[D5], Driver
11									WIRING, Power Seat
	5142 959AA	1	J, T					B5	Power, Left
		1	J, T					DL	Power, Left
		1	J, U					DL	Power, Left
	5142 958AA	1	J, T					DL	Power, Right
	5143 005AA	1	J, T					DL	Power and Heated, Left
		1	J, U					DL	Power and Heated, Left
	5143 004AA	1	J, T					DL	Power and Heated, Right
	5143 034AA	1	J, T					DL	Power and Heated, Mexico, Right
		1	J, U					DL	Power and Heated, Export, Right
	5143 028AA	1	J, U					DL	Power, Export, Right
		1	J, T					DL	Power, Mexico, Right
	5142 959AA	1	J, U					J7	Left
	5143 028AA	1	J, U					J7	Right
		1	J, U					L7	Right
	5142 959AA	1	J, T					L7	Left
		1	J, T					N5	Left
12									SWITCH, Seat
	55352 782AA	1	J, T					B5	
		2	J, U					DL	
		2	J, T					DL	
		2	J, U					J7	

2006 Liberty (KJ)

SERIES	LINE	BODY	ENGINE	TRANSMISSION
H =HIGHLINE	T =JEEP - 2WD	74 =SPORT UTILITY 4-DR	EKG=3.7L V6 Eng.	DG6=4-Spd. Auto. 42RLE Trans.
M =MEDIUM	J =JEEP - 4WD		ENR=2.8L 4 Cyl Turbo Diesel Eng.	DGV=4-Spd. Auto. VLP Trans.
P =PREMIUM	U =JEEP - 4WD (RHD)		ENJ=2.5L 4 Cyl 16V Turbo Diesel Eng.	DGQ=5-Spd Auto. 5-45RFE Trans.
			ED1=2.4L 4 Cyl DOHC 16v SMPI Eng.	DEH=6-Speed Man. NSG370 Trans.
				DDD=5-Speed HD Man. Trans.
				DDK=5-Speed HD Man. Trans.

Recliner and Adjuster
Figure IKJ-810

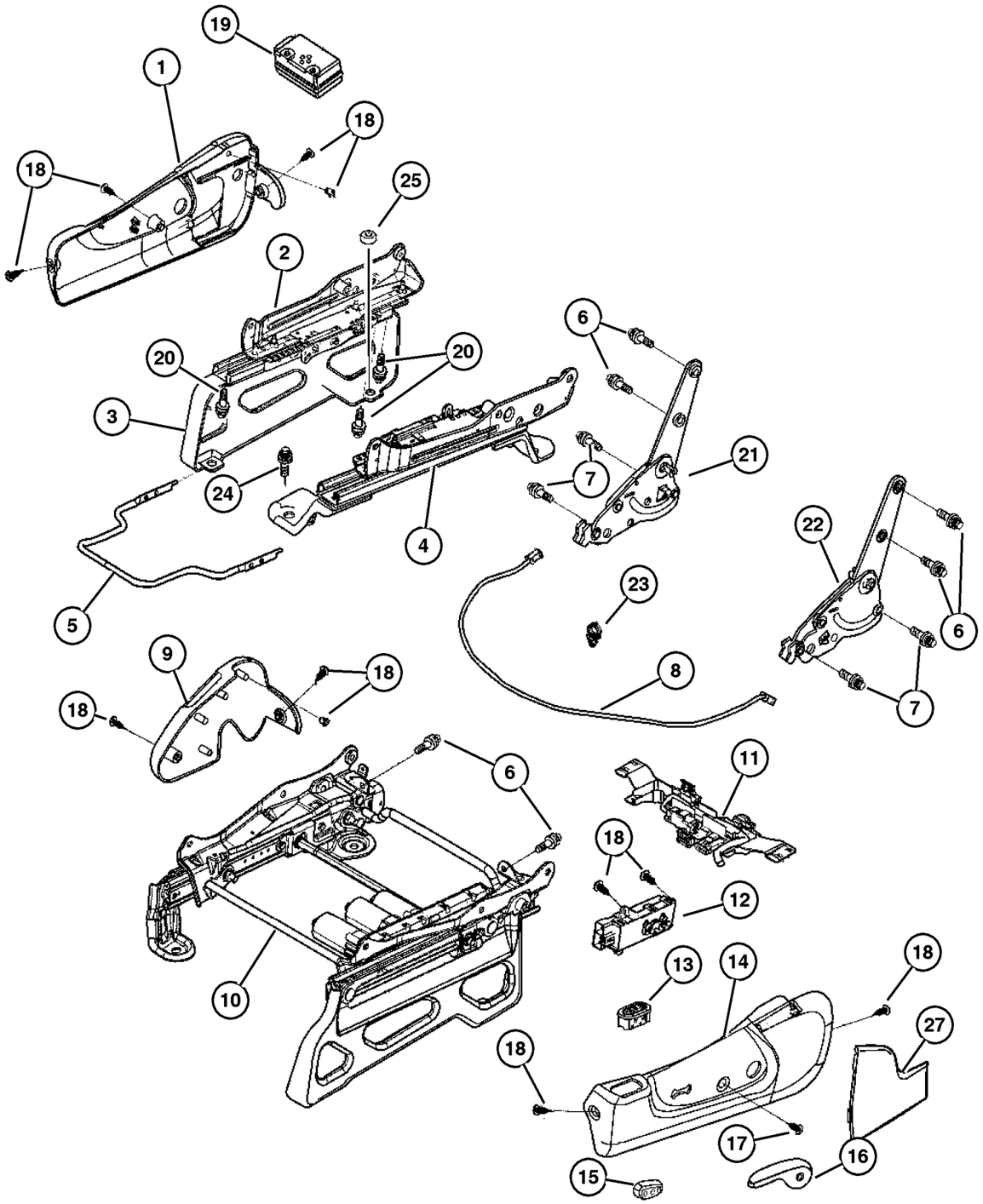

ITEM	PART NUMBER	QTY	LINE	SERIES	BODY	ENGINE	TRANS	TRIM	DESCRIPTION
		2	J, U					L7	
		1	J, T					N5	
13									SWITCH, Heated Seat
	5GW44 DX9AB	2	J, T					DL	
		2	J, U					DL	
14									SHIELD, Seat Adjuster, Power Seat
	ZH85 1D5AA	1	J, T					B5	[D5],Non-Heated, Left
	ZH85 1J3AA	1	J, T					B5	[J3],Non-Heated, Left
	ZH84 1D1AA	1	J, U					DL	[J1],Non-Heated, Right
		1	J, T					DL	[J1],Non-Heated, Right
	ZH84 1DBAA	1	J, U					DL	[DB],Non-Heated, Right
		1	J, T					DL	[DB],Non-Heated, Right
	ZH85 1D1AA	1	J, U					DL	[J1],Non-Heated, Left
		1	J, T					DL	[J1],Non-Heated, Left
	ZH85 1DBAA	1	J, U					DL	[DB],Non-Heated, Left
		1	J, T					DL	[DB],Non-Heated, Left
	ZH86 1D1AA	1	J, T					DL	[J1],Heated, Right
		1	J, U					DL	[J1],Heated, Right
	ZH86 1DBAA	1	J, U					DL	[DB],Heated, Right
		1	J, T					DL	[DB],Heated, Right
	ZH87 1D1AA	1	J, T					DL	[J1],Heated, Left
		1	J, U					DL	[J1],Heated, Left
	ZH87 1DBAA	1	J, U					DL	[DB],Heated, Left
		1	J, T					DL	[DB],Heated, Left
	ZH84 1D5AA	1	J, U					J7	[D5],Non-Heated, Right
		1	J, T					DL	[DB],Heated, Left
	ZH84 1D5AA	1	J, U					J7	[D5],Non-Heated, Right
	ZH84 1J3AA	1	J, U					J7	[J3],Non-Heated, Right
	ZH85 1D5AA	1	J, U					J7	[D5],Non-Heated, Left
	ZH85 1J3AA	1	J, U					J7	[J3],Non-Heated, Left
	ZH85 1D5AA	1	J, T					L7	[D5],Non-Heated, Left
		1	J, U					L7	[D5],Non-Heated, Left
	ZH85 1J3AA	1	J, U					L7	[J3],Non-Heated, Left
		1	J, T					L7	[J3],Non-Heated, Left
	ZH84 1J3AA	1	J, U					L7	[J3],Non-Heated, Right
	ZH84 1D5AA	1	J, U					L7	[D5],Non-Heated, Right
	ZH85 1D5AA	1	J, T					N5	[D5],Non-Heated, Left
	ZH85 1J3AA	1	J, T					N5	[J3],Non-Heated, Left
15									KNOB, Power Seat Switch
	4607 043AB	1	J, T					B5	Left
	4607 042AB	1	J, U					DL	Right
		1	J, T					DL	Right
	4607 043AB	1	J, T					DL	Left
		1	J, U					DL	Left

2006 Liberty (KJ)

SERIES	LINE	BODY	ENGINE	TRANSMISSION
H =HIGHLINE	T =JEEP - 2WD	74 =SPORT UTILITY 4-DR	EKG=3.7L V6 Eng.	DG6=4-Spd. Auto. 42RLE Trans.
M =MEDIUM	J =JEEP - 4WD		ENR=2.8L 4 Cyl Turbo Diesel Eng.	DGV=4-Spd. Auto. VLP Trans.
P =PREMIUM	U =JEEP - 4WD (RHD)		ENJ=2.5L 4 Cyl 16V Turbo Diesel Eng.	DGQ=5-Spd Auto. 5-45RFE Trans.
			ED1=2.4L 4 Cyl DOHC 16v SMPI Eng.	DEH=6-Speed Man. NSG370 Trans.
				DDD=5-Speed HD Man. Trans.
				DDK=5-Speed HD Man. Trans.

Recliner and Adjuster
Figure IKJ-810

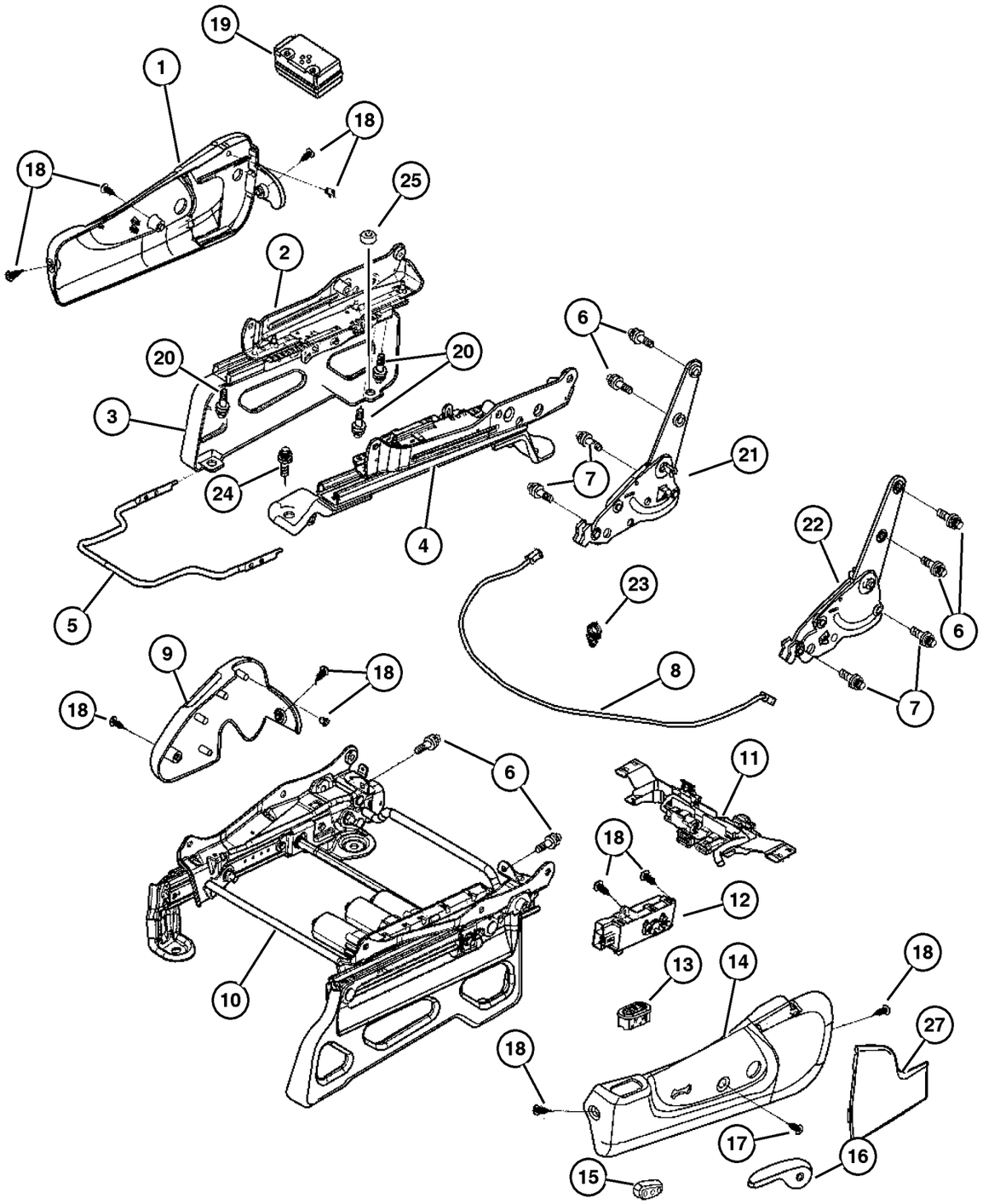

ITEM	PART NUMBER	QTY	LINE	SERIES	BODY	ENGINE	TRANS	TRIM	DESCRIPTION
		1	J, U					J7	Left
	4607 042AB	1	J, U					J7	Right
	4607 043AB	1	J, T					L7	Left
	4607 042AB	1	J, U					L7	Right
	4607 043AB	1	J, U					L7	Left
		1	J, T					N5	Left
16									HANDLE, Recliner
	UZ28 1D5AB	1	J, T					B5	[D5], Right
	UZ28 1J3AB	1	J, T					B5	[J3], Right
	UZ29 1D5AB	1	J, T					B5	[D5], Left
	UZ29 1J3AB	1	J, T					B5	[J3], Left
		1	J, U					B7	[J3], Left
	UZ29 1D5AB	1	J, U					B7	[D5], Left
	UZ28 1J3AB	1	J, U					B7	[J3], Right
	UZ28 1D5AB	1	J, U					B7	[D5], Right
	UZ29 1DBAB	1	J, T					DL	[DB], Left
		1	J, U					DL	[DB], Left
	UZ28 1D1AB	1	J, T					DL	[J1], Right
	UZ29 1D1AB	1	J, T					DL	[J1], Left
		1	J, U					DL	[J1], Left
	UZ28 1DBAB	1	J, U					DL	[DB], Right
		1	J, T					DL	[DB], Right
	UZ28 1D1AB	1	J, U					DL	[J1], Right
	UZ29 1D5AB	1	J, U					J7	[D5], Left
	UZ28 1D5AB	1	J, U					J7	[D5], Right
	UZ29 1J3AB	1	J, U					J7	[J3], Left
	UZ28 1J3AB	1	J, U					J7	[J3], Right
	UZ28 1D5AB	1	J, U					L7	[D5], Right
		1	J, T					L7	[D5], Right
	UZ28 1J3AB	1	J, T					L7	[J3], Right
		1	J, U					L7	[J3], Right
	UZ29 1D5AB	1	J, U					L7	[D5], Left
		1	J, T					L7	[D5], Left
	UZ29 1J3AB	1	J, T					L7	[J3], Left
		1	J, U					L7	[J3], Left
17									SCREW, Recliner Handle
	5072 127AB	2	J, T					B5	
		2	J, U					B7	
		2	J, T					DL	
		1	J, U					DL	
		1	J					J7	
		2	J, T					L7	

2006 Liberty (KJ)

SERIES	LINE	BODY	ENGINE	TRANSMISSION
H =HIGHLINE	T =JEEP - 2WD	74 =SPORT UTILITY 4-DR	EKG=3.7L V6 Eng.	DG6=4-Spd. Auto. 42RLE Trans.
M =MEDIUM	J =JEEP - 4WD		ENR=2.8L 4 Cyl Turbo Diesel Eng.	DGV=4-Spd. Auto. VLP Trans.
P =PREMIUM	U =JEEP - 4WD (RHD)		ENJ=2.5L 4 Cyl 16V Turbo Diesel Eng.	DGQ=5-Spd Auto. 5-45RFE Trans.
			ED1=2.4L 4 Cyl DOHC 16v SMPI Eng.	DEH=6-Speed Man. NSG370 Trans.
				DDD=5-Speed HD Man. Trans.
				DDK=5-Speed HD Man. Trans.

Recliner and Adjuster
Figure IKJ-810

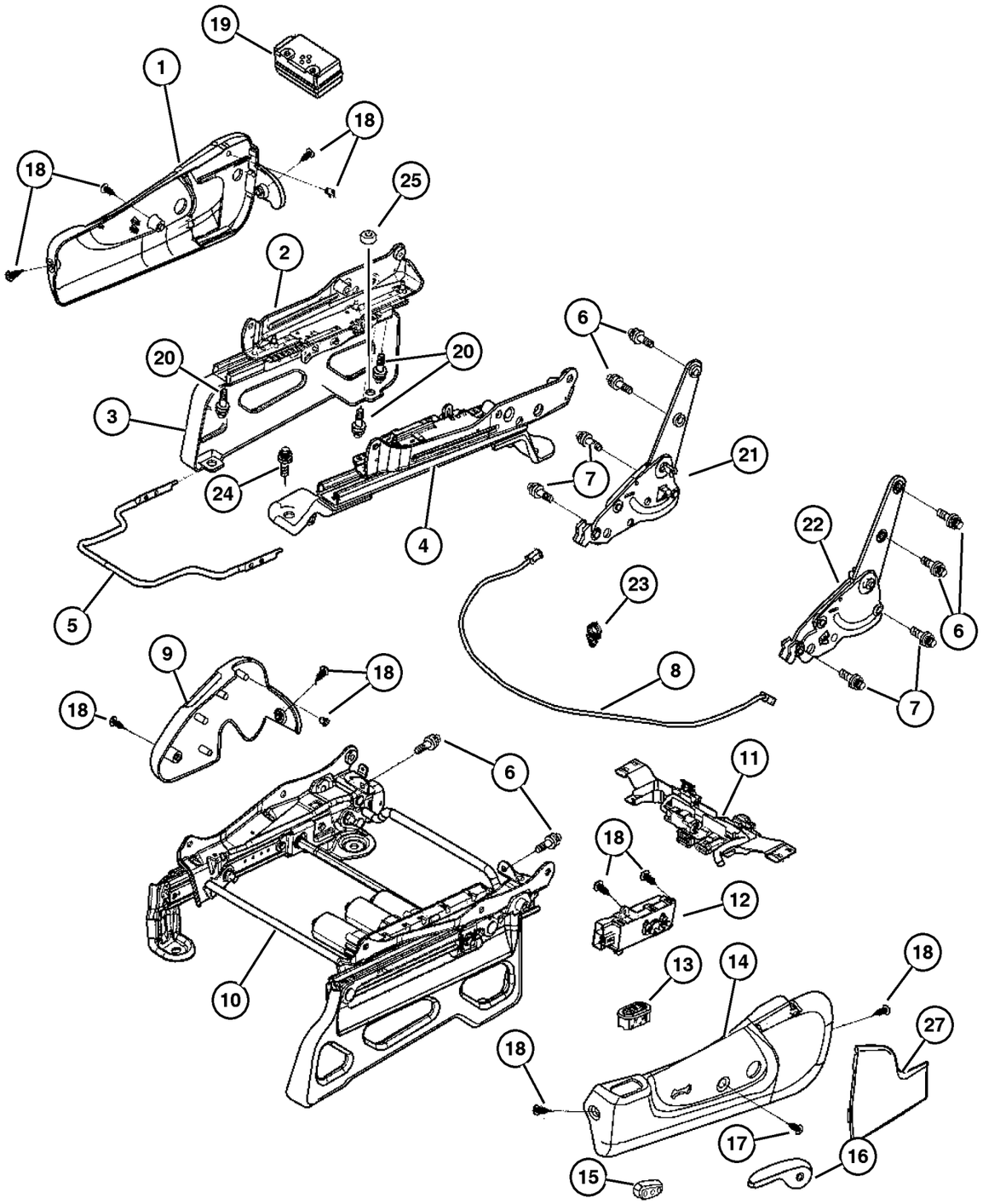

ITEM	PART NUMBER	QTY	LINE	SERIES	BODY	ENGINE	TRANS	TRIM	DESCRIPTION
		2	J, U					L7	
		2	J, T					N5	
18									SCREW, Trim
	5072 741AA	8	J, T					B5	
		8	J, U					B7	
		8	J, T					DL	
		1	J, U					DL	
		8	J					J7	
		8	J, U					L7	
		8	J, T					L7	
		8	J, T					N5	
19									MODULE, Heated Seat Control
	56010 113AA	1	J, T					DL	
		1	J, U					DL	
20	6101 452	1							SCREW AND WASHER, Hex Head, M8x1.25x20
21									RECLINER, Front Seat Back
	5072 022AA	1	J, T					B5	Left Inboard
	5072 020AA	1	J, T					B5	Right Outboard
		1	J, U					B7	Right Outboard
	5072 022AA	1	J, U					B7	Left Inboard
	5072 020AA	1	J, T					DL	Right Outboard
		1	J, U					DL	Right Outboard
	5072 022AA	1	J, T					DL	Left Inboard
		1	J, U					DL	Left Inboard
	5072 020AA	1	J					J7	Right Outboard
	5072 022AA	1	J					J7	Left Inboard
		1	J, T					L7	Left Inboard
	5072 020AA	1	J, U					L7	Right Outboard
		1	J, T					L7	Right Outboard
	5072 022AA	1	J, U					L7	Left Inboard
		1	J, T					N5	Left Inboard
	5072 020AA	1	J, T					N5	Right Outboard
22									RECLINER, Front Seat Back
	5072 023AA	1	J, T					B5	Left Outboard
	5072 021AA	1	J, T					B5	Right Inboard
	5072 023AA	1	J, U					B7	Left Outboard
	5072 021AA	1	J, U					B7	Right Inboard
	5072 023AA	1	J, T					DL	Left Outboard
		1	J, U					DL	Left Outboard
	5072 021AA	1	J, T					DL	Right Inboard
		1	J, U					DL	Right Inboard

2006 Liberty (KJ)

SERIES	LINE	BODY	ENGINE	TRANSMISSION
H =HIGHLINE	T =JEEP - 2WD	74 =SPORT UTILITY 4-DR	EKG=3.7L V6 Eng.	DG6=4-Spd. Auto. 42RLE Trans.
M =MEDIUM	J =JEEP - 4WD		ENR=2.8L 4 Cyl Turbo Diesel Eng.	DGV=4-Spd. Auto. VLP Trans.
P =PREMIUM	U =JEEP - 4WD (RHD)		ENJ=2.5L 4 Cyl 16V Turbo Diesel Eng.	DGQ=5-Spd Auto. 5-45RFE Trans.
			ED1=2.4L 4 Cyl DOHC 16v SMPI Eng.	DEH=6-Speed Man. NSG370 Trans.
				DDD=5-Speed HD Man. Trans.
				DDK=5-Speed HD Man. Trans.

Recliner and Adjuster
Figure IKJ-810

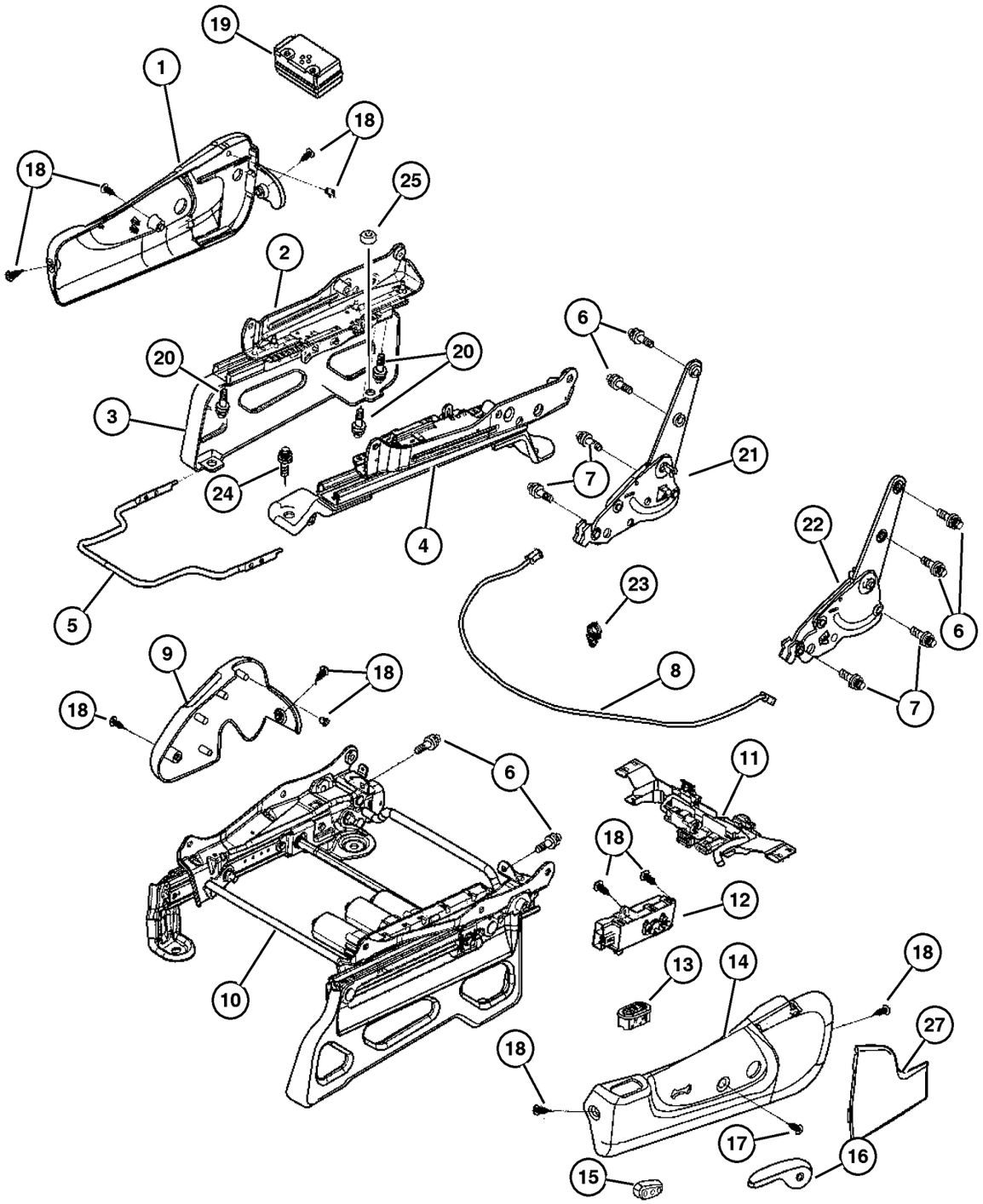

ITEM	PART NUMBER	QTY	LINE	SERIES	BODY	ENGINE	TRANS	TRIM	DESCRIPTION
	5072 023AA	1	J					J7	Left Outboard
	5072 021AA	1	J					J7	Right Inboard
		1	J, U					L7	Right Inboard
	5072 023AA	1	J, U					L7	Left Outboard
	5072 021AA	1	J, T					L7	Right Inboard
	5072 023AA	1	J, T					L7	Left Outboard
	5072 021AA	1	J, T					N5	Right Inboard
	5072 023AA	1	J, T					N5	Left Outboard
23									CLIP, Cable
	5072 013AA	4	J, T					B5	
		4	J, U					B7	
		4	J, T					DL	
		4	J, U					DL	
		1	J					J7	
		4	J, U					L7	
		4	J, T					L7	
		4	J, T					N5	
24	6506 791AA	6							SCREW, Seat
25	6507 170AA	2							BOLT, Seat
-26	4754 806	1	U						BRACKET, Attaches Flare to Front Outboard Riser, Japan Only
27									COVER, Seat Belt Anchor
	5JX80 BD1AA	1						O0	[J1], Right
	5JX80 BD5AA	1						O0	[D5], Right
	5JX80 XDBAA	1						O0	[DB], Right
	5JX80 ZJ3AA	1						O0	[J3], Right
	5JX81 BD1AA	1						O0	[J1], Left
	5JX81 BD5AA	1						O0	[D5], Left
	5JX81 XDBAA	1						O0	[DB], Left
	5JX81 ZJ3AA	1						O0	[J3], Left

2006 Liberty (KJ)

SERIES	LINE	BODY	ENGINE	TRANSMISSION
H =HIGHLINE	T =JEEP - 2WD	74 =SPORT UTILITY 4-DR	EKG=3.7L V6 Eng.	DG6=4-Spd. Auto. 42RLE Trans.
M =MEDIUM	J =JEEP - 4WD		ENR=2.8L 4 Cyl Turbo Diesel Eng.	DGV=4-Spd. Auto. VLP Trans.
P =PREMIUM	U =JEEP - 4WD (RHD)		ENJ=2.5L 4 Cyl 16V Turbo Diesel Eng.	DGQ=5-Spd Auto. 5-45RFE Trans.
			ED1=2.4L 4 Cyl DOHC 16v SMPI Eng.	DEH=6-Speed Man. NSG370 Trans.
				DDD=5-Speed HD Man. Trans.
				DDK=5-Speed HD Man. Trans.

AR = Use as required - = Non illustrated part # = New this model year

Swing Gate Trim Panel
Figure IKJ-1010

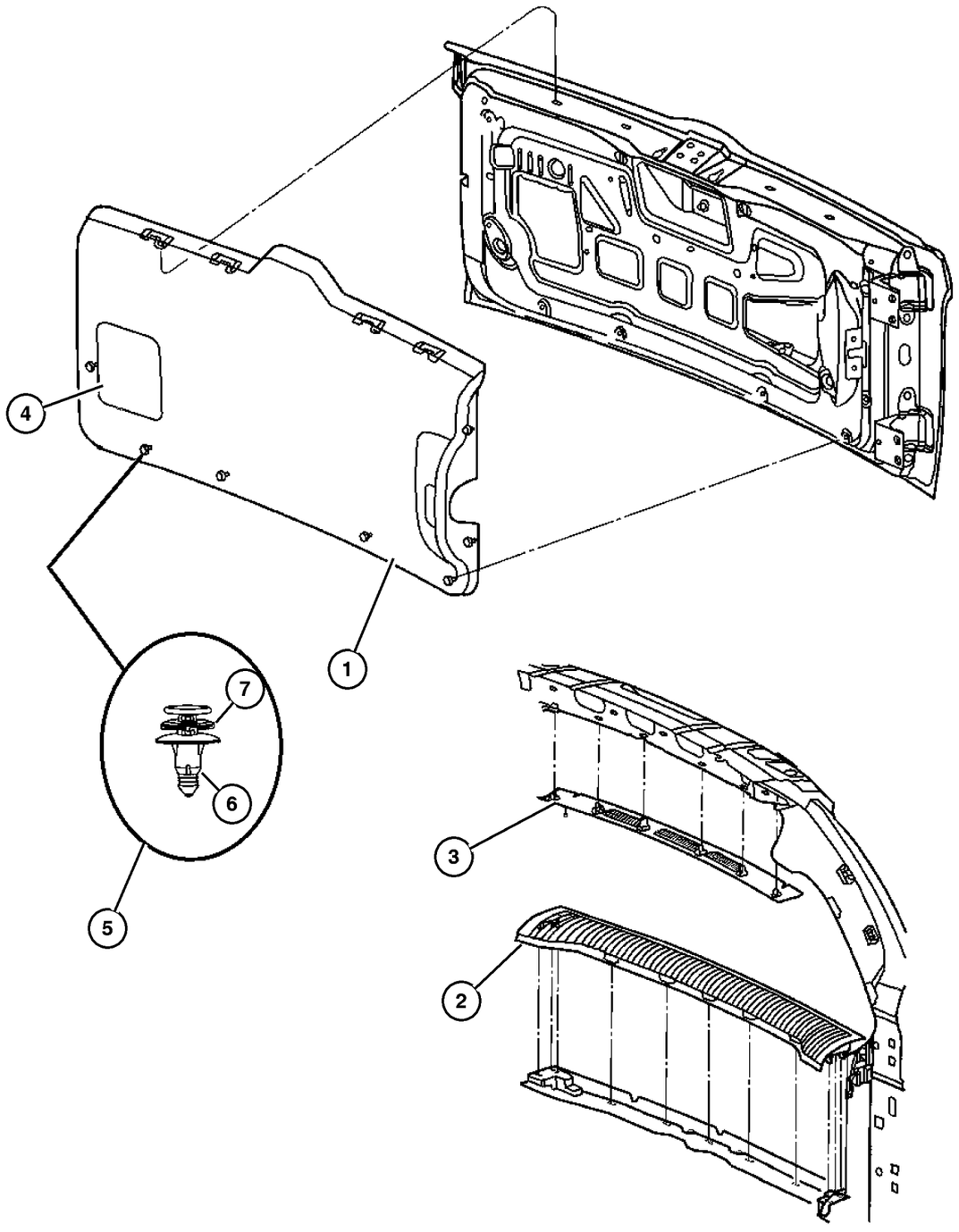

ITEM	PART NUMBER	QTY	LINE	SERIES	BODY	ENGINE	TRANS	TRIM	DESCRIPTION
1									PANEL, Liftgate Lower
	5GE89 BD5AJ	1						O0	[D5 , DB]
	5GE89 ZJ3AJ	1						O0	[J1 , J3]
2									PLATE, Liftgate Scuff, Lower
	5GE73 BD5AJ	1						O0	[D5 , DB]
	5GE73 ZJ3AJ	1						O0	[J1 , J3]
3									MOLDING, Headliner
	5GP80 BD5AI	1						O0	[D5 , DB]
	5GP80 ZJ3AI	1						O0	[J1 , J3]
4									PANEL, Liftgate Glass Latch
	WZ20 BD5AA	1						O0	[D5 , DB]
	WZ20 ZJ3AA	1						O0	[J1 , J3]
5	55116 997AB	9						O0	RETAINER, Trim Panel
6	5023 174AA	9						O0	PIN, Push
7	5023 175AA	9						O0	GROMMET

2006 Liberty (KJ)

SERIES	LINE	BODY	ENGINE	TRANSMISSION
H =HIGHLINE	T =JEEP - 2WD	74 =SPORT UTILITY 4-DR	EKG=3.7L V6 Eng.	DG6=4-Spd. Auto. 42RLE Trans.
M =MEDIUM	J =JEEP - 4WD		ENR=2.8L 4 Cyl Turbo Diesel Eng.	DGV=4-Spd. Auto. VLP Trans.
P =PREMIUM	U =JEEP - 4WD (RHD)		ENJ=2.5L 4 Cyl 16V Turbo Diesel Eng.	DGQ=5-Spd Auto. 5-45RFE Trans.
			ED1=2.4L 4 Cyl DOHC 16v SMPI Eng.	DEH=6-Speed Man. NSG370 Trans.
				DDD=5-Speed HD Man. Trans.
				DDK=5-Speed HD Man. Trans.

Group – SKJ

Body Sheet Metal Except Doors

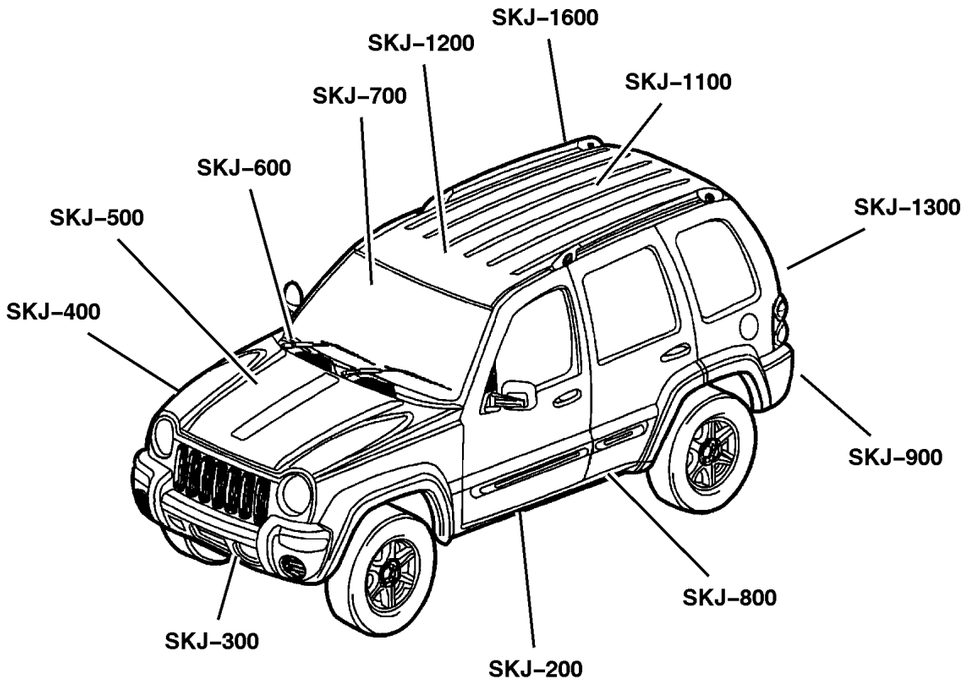

SKJ–200 Floor Pans 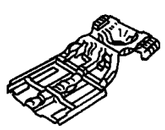	**SKJ–300** Plugs 	**SKJ–400** Front Fenders 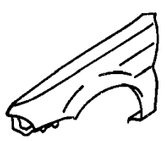	**SKJ–500** Hood & Hood Release 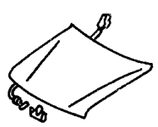
SKJ–600 Cowl and Dash Panel 	**SKJ–700** Glass and Rear View Mirror 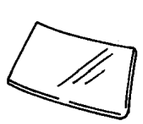	**SKJ–800** Aperture Panel 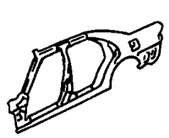	**SKJ–900** Quarter Panel and Pillar 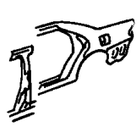

Group – SKJ

Body Sheet Metal Except Doors

SKJ–1100 Roof Panels 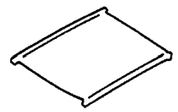	**SKJ–1200** Sunroof 	**SKJ–1300** Liftgate Panel 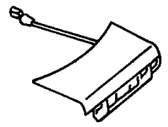	**SKJ–1600** Luggage Rack

GROUP SKJ - Body Sheet Metal Except Doors

Illustration Title	Group-Fig. No.
Floor Pans	
Front Floor Pan	Fig. SKJ-210
Rear Floor Pan	Fig. SKJ-220
Plates, Underbody Skid	Fig. SKJ-230
Plugs	
Plugs	Fig. SKJ-310
Front Fenders	
Front Fender	Fig. SKJ-410
Hood & Hood Release	
Hood, Latch and Hinges	Fig. SKJ-510
Cowl and Dash Panel	
Cowl and Dash Panel	Fig. SKJ-610
Glass and Rear View Mirror	
Windshield, Quarter Window, Backlite and Mirror	Fig. SKJ-710
Aperture Panel	
Panels, Body Side	Fig. SKJ-810
Quarter Panel and Pillar	
Panels, Rear Quarter	Fig. SKJ-910
Fuel Filler Housing and Door	Fig. SKJ-920
Roof Panels	
Roof Panel	Fig. SKJ-1110
Sunroof	
Sunroof	Fig. SKJ-1210
Liftgate Panel	
Swing Gate, Latch, and Hinges	Fig. SKJ-1310
Luggage Rack	
Luggage Rack	Fig. SKJ-1610

Front Floor Pan
Figure SKJ-210

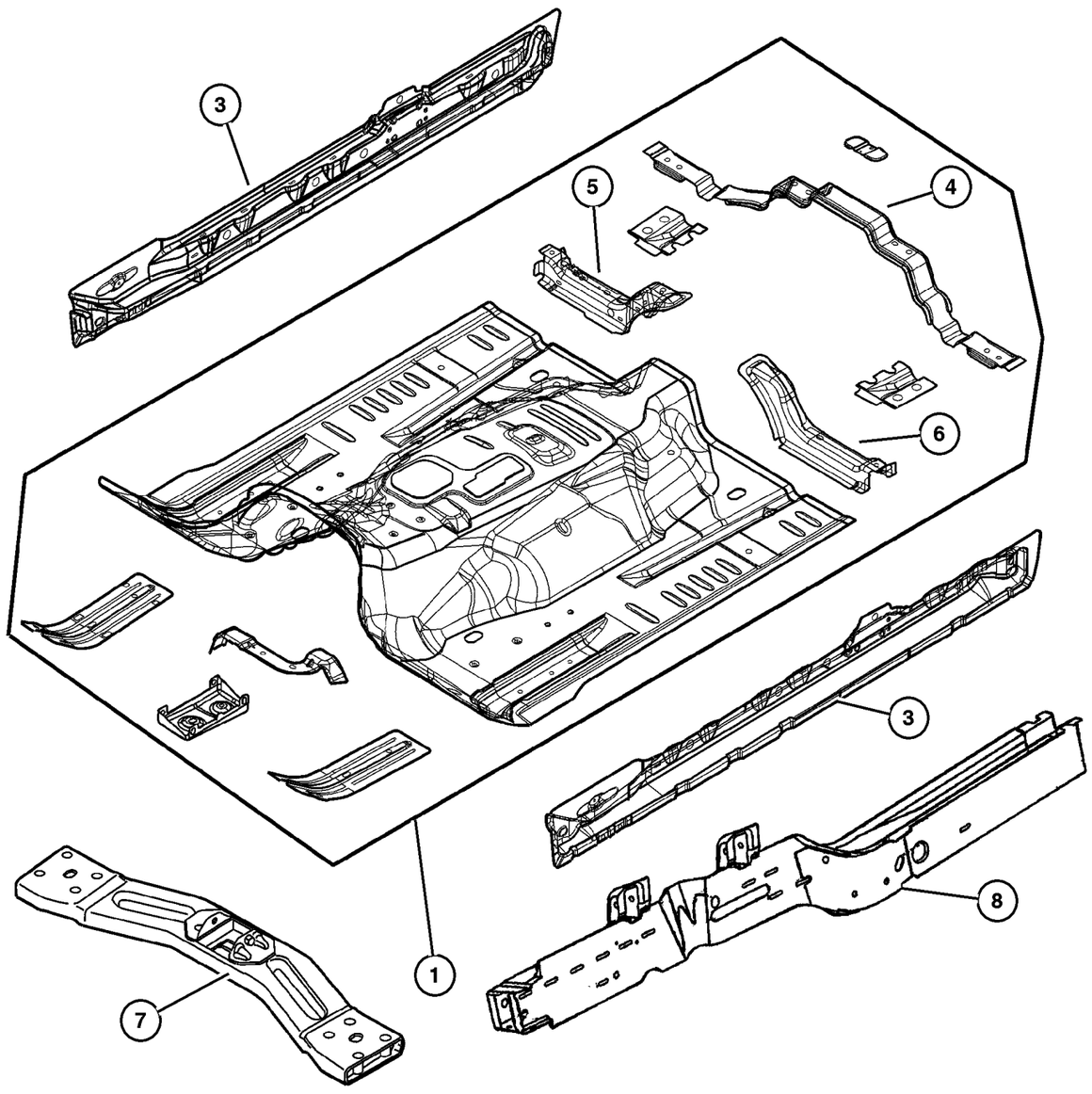

ITEM	PART NUMBER	QTY	LINE	SERIES	BODY	ENGINE	TRANS	TRIM	DESCRIPTION
1	55360 589AG	1							PAN, Floor
-2	6507 033AA-	4							STUD
3									SILL, Body Side
	55176 878AE	1							Right
	55176 879AE	1							Left
4	56052 085AA	1							CROSSMEMBER, Front Seat Retention, Rear
5	56052 086AA	2							CROSSMEMBER, Front Seat Retention
6	56052 087AA	2							CROSSMEMBER, Front Seat Retention
7	52129 090AC	1							CROSSMEMBER, Transmission
8									PANEL, Sill
	5103 422AA	1							Right
	5103 423AA	1							Left

2006 Liberty (KJ)

SERIES	LINE	BODY	ENGINE	TRANSMISSION
H =HIGHLINE	T =JEEP - 2WD	74 =SPORT UTILITY 4-DR	EKG=3.7L V6 Eng.	DG6=4-Spd. Auto. 42RLE Trans.
M =MEDIUM	J =JEEP - 4WD		ENR=2.8L 4 Cyl Turbo Diesel Eng.	DGV=4-Spd. Auto. VLP Trans.
P =PREMIUM	U =JEEP - 4WD (RHD)		ENJ=2.5L 4 Cyl 16V Turbo Diesel Eng.	DGQ=5-Spd Auto. 5-45RFE Trans.
			ED1=2.4L 4 Cyl DOHC 16v SMPI Eng.	DEH=6-Speed Man. NSG370 Trans.
				DDD=5-Speed HD Man. Trans.
				DDK=5-Speed HD Man. Trans.

Rear Floor Pan
Figure SKJ-220

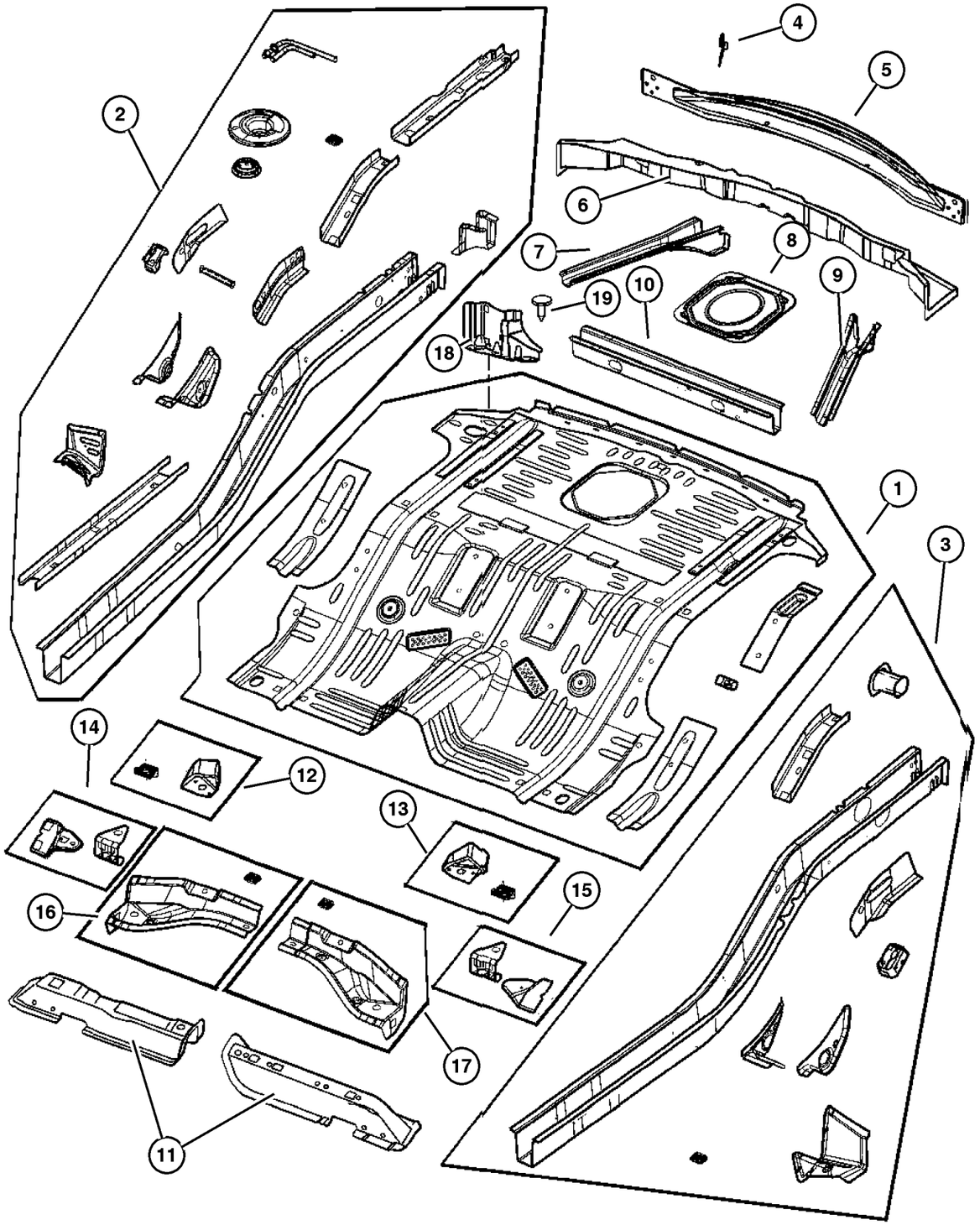

ITEM	PART NUMBER	QTY	LINE	SERIES	BODY	ENGINE	TRANS	TRIM	DESCRIPTION
1	55360 015AG	1							PAN, Floor
2	5080 850AC	1							SILL, Rear, Right
3	5080 851AC	1							SILL, Rear, Left
4									BAFFLE, Air
	55360 260AA	1							Right
	55360 261AA	1							Left
5	55360 371AC	1							REINFORCEMENT, Liftgate Opening
6	55176 846AB	1							CROSSMEMBER, Floor Pan
7	56022 913AB	1							SUPPORT, Fuel Tank
8									DOOR, Fuel Fill, (NOT SERVICED)
									(Not Serviced)
9	56022 914AB	1							SUPPORT, Fuel Tank, Right
10	56022 915AC	1							CROSSMEMBER, Floor Pan
11									CROSSMEMBER, Floor Pan
	55360 062AB	1							Right
	55360 063AB	1							Left
12	5073 062AA	1							REINFORCEMENT, Rear Seat
13	5073 063AA	1							REINFORCEMENT, Rear Seat
14	5073 060AA	1							BRACKET, Control Arm
15	5073 061AA	1							BRACKET, Control Arm
16	5073 058AA	1							CROSSMEMBER, Rear Floor
17	5073 059AA	1							CROSSMEMBER, Rear Floor
18									GUSSET, Side Member
	55360 368AC	1							Right
	55360 369AD	1							Left
19	6507 345AA	4							PIN, Push

2006 Liberty (KJ)

SERIES	LINE	BODY	ENGINE	TRANSMISSION
H =HIGHLINE	T =JEEP - 2WD	74 =SPORT UTILITY 4-DR	EKG=3.7L V6 Eng.	DG6=4-Spd. Auto. 42RLE Trans.
M =MEDIUM	J =JEEP - 4WD		ENR=2.8L 4 Cyl Turbo Diesel Eng.	DGV=4-Spd. Auto. VLP Trans.
P =PREMIUM	U =JEEP - 4WD (RHD)		ENJ=2.5L 4 Cyl 16V Turbo Diesel Eng.	DGQ=5-Spd Auto. 5-45RFE Trans.
			ED1=2.4L 4 Cyl DOHC 16v SMPI Eng.	DEH=6-Speed Man. NSG370 Trans.
				DDD=5-Speed HD Man. Trans.
				DDK=5-Speed HD Man. Trans.

Plates, Underbody Skid
Figure SKJ-230

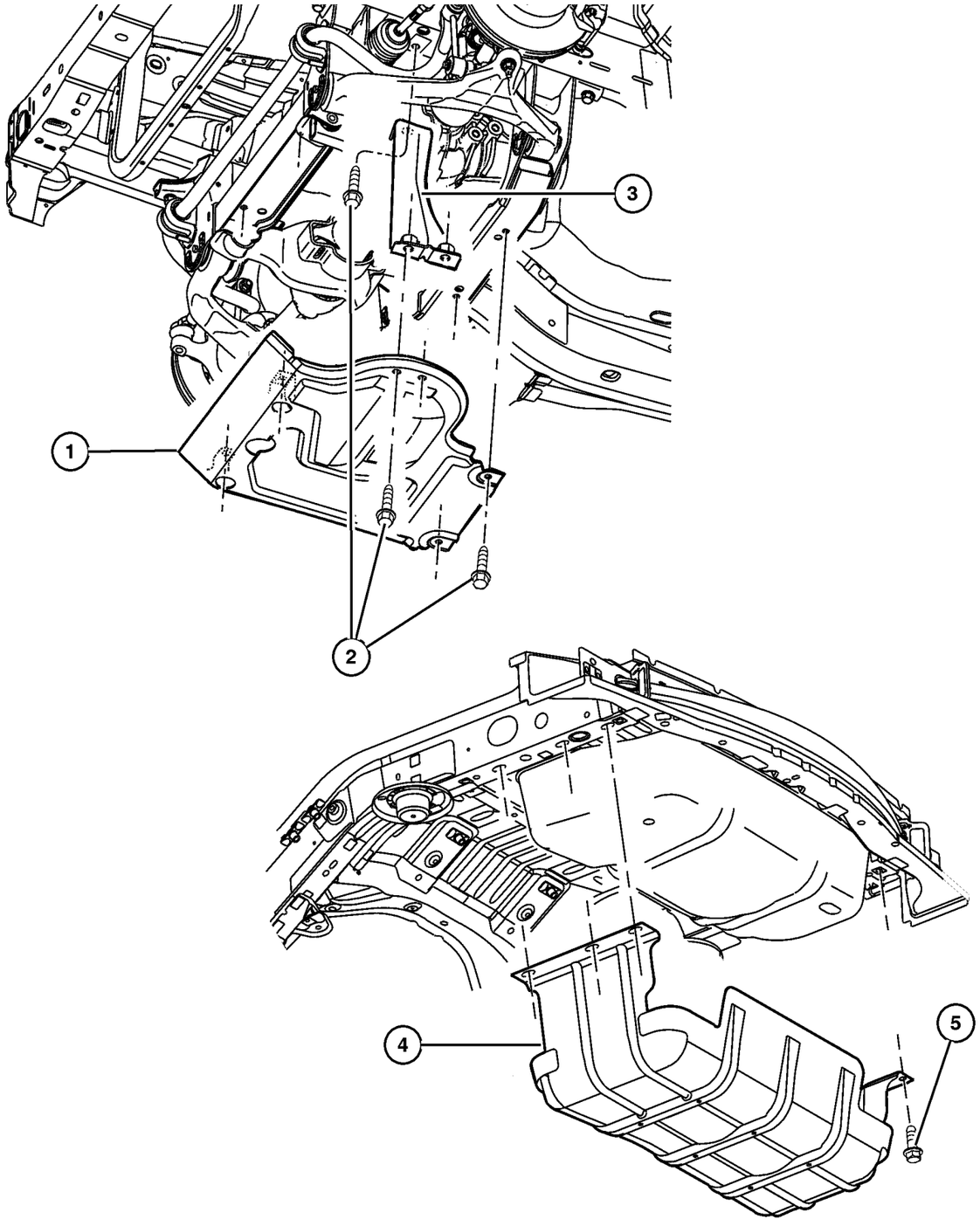

ITEM	PART NUMBER	QTY	LINE	SERIES	BODY	ENGINE	TRANS	TRIM	DESCRIPTION
1	52129 092AA	1	J, U						SKID PLATE, Front
2									SCREW, M10x1.5x30, (NOT SERVICED) (Not Serviced)
3									BRACKET, Skid Plate
	52128 544AA	1	J, U						Right
	52128 545AA	1	J, U						Left
4	52100 332AH	1							PLATE, Skid
5	6502 557	6							BOLT, Hex Flange Head, M12x1.75x40

2006 Liberty (KJ)

SERIES	LINE	BODY	ENGINE	TRANSMISSION
H =HIGHLINE	T =JEEP - 2WD	74 =SPORT UTILITY 4-DR	EKG=3.7L V6 Eng.	DG6=4-Spd. Auto. 42RLE Trans.
M =MEDIUM	J =JEEP - 4WD		ENR=2.8L 4 Cyl Turbo Diesel Eng.	DGV=4-Spd. Auto. VLP Trans.
P =PREMIUM	U =JEEP - 4WD (RHD)		ENJ=2.5L 4 Cyl 16V Turbo Diesel Eng.	DGQ=5-Spd Auto. 5-45RFE Trans.
			ED1=2.4L 4 Cyl DOHC 16v SMPI Eng.	DEH=6-Speed Man. NSG370 Trans.
				DDD=5-Speed HD Man. Trans.
				DDK=5-Speed HD Man. Trans.

Plugs
Figure SKJ-310

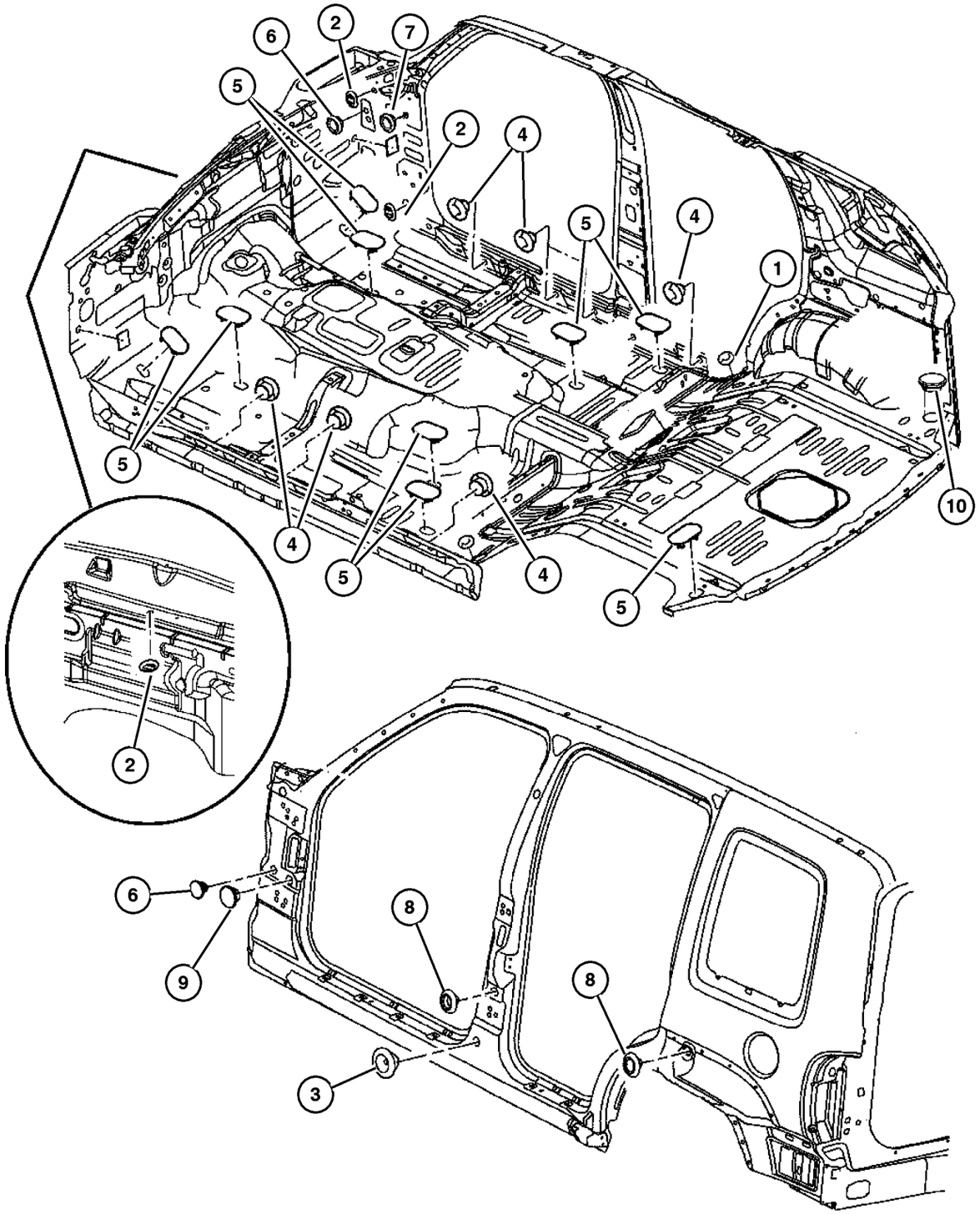

ITEM	PART NUMBER	QTY	LINE	SERIES	BODY	ENGINE	TRANS	TRIM	DESCRIPTION
1	4780 615AB	2							PLUG, Body, .75 Diameter, Rear Floor Pan
2	4716 933	2							PLUG, Body Side Aperture
3	55257 380AD	2							PLUG
4	4780 615AB	8							PLUG, Body, .75 Diameter
5	55360 966AA	6							PLUG, Floor Pan
6	55136 859AB	2							PLUG, Plastic, Expandable
7	4780 615AB	2							PLUG, Body, .75 Diameter
8	55176 729AA	4							PLUG
9									PLUG, Plastic Expandable, 25mm, (NOT SERVICED) (Not Serviced)
10	56010 048AB	1							PLUG

2006 Liberty (KJ)

SERIES	LINE	BODY	ENGINE	TRANSMISSION
H =HIGHLINE	T =JEEP - 2WD	74 =SPORT UTILITY 4-DR	EKG=3.7L V6 Eng.	DG6=4-Spd. Auto. 42RLE Trans.
M =MEDIUM	J =JEEP - 4WD		ENR=2.8L 4 Cyl Turbo Diesel Eng.	DGV=4-Spd. Auto. VLP Trans.
P =PREMIUM	U =JEEP - 4WD (RHD)		ENJ=2.5L 4 Cyl 16V Turbo Diesel Eng.	DGQ=5-Spd Auto. 5-45RFE Trans.
			ED1=2.4L 4 Cyl DOHC 16v SMPI Eng.	DEH=6-Speed Man. NSG370 Trans.
				DDD=5-Speed HD Man. Trans.
				DDK=5-Speed HD Man. Trans.

Front Fender
Figure SKJ-410

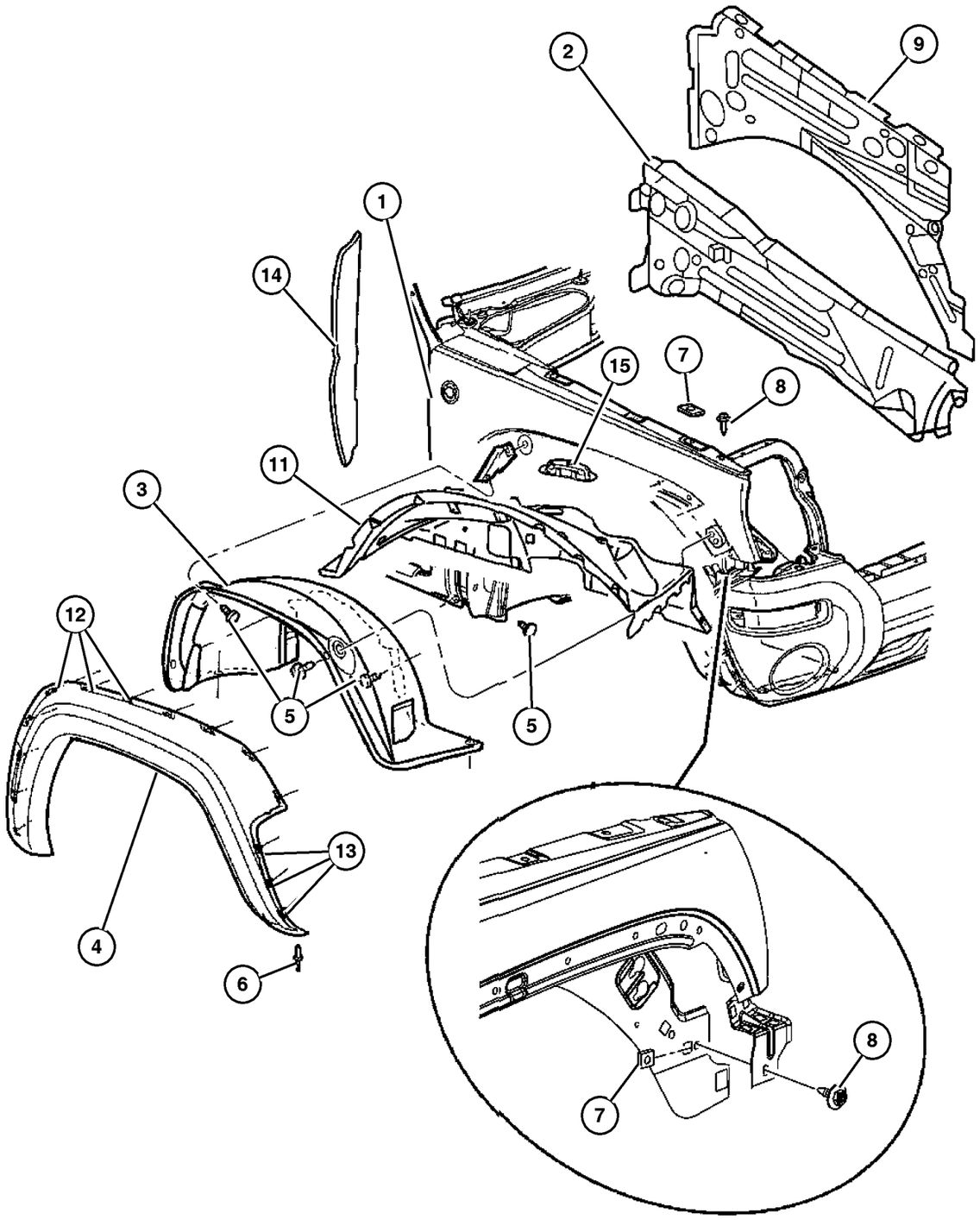

ITEM	PART NUMBER	QTY	LINE	SERIES	BODY	ENGINE	TRANS	TRIM	DESCRIPTION
1									FENDER, Front
	55360 598AA	1							Right
	55360 599AA	1							Left
2									REINFORCEMENT, Fender
	55177 414AE	1							Right
	55177 415AE	1							Left
3									LINER, Front Fender
	55157 144AD	1							With Diesel Engine, Right
	55157 145AD	1							With Diesel Engine, Left
	55156 790AD	1							Right
	55156 791AD	1							Left
4									APPLIQUE, Fender Wheel Opening
	5JH46 BDLAE	1							[K3L], Right
	5JH47 BDLAE	1							[K3L], Left
	5JR68 CD7AG	1							[K8P], Right
	5JR69 CD7AG	1							[K8P], Left
	5JR68 CJMAG	1							[K8E], Right
	5JR69 CJMAG	1							[K8E], Left
	5JH42 TZZAE	1							[K5],Paint as Required, Right
	5JH43 TZZAE	1							[K5],Paint as Required, Left
5	6036 155AA	8							PIN, Push
6	6506 007AA	8							RIVET
7	6504 118	6							U-NUT, M6 x 1.00, M6x1.00
8	6505 903AA	2							SCREW AND WASHER, Self Tapping, M6x1x22
9									PANEL, Fender, Inner
	55177 016AF	1							Right
	55177 017AF	1							Left
-10									BRACKET, Ballstud, Gas Prop Mounting
	55360 428AB-	1							Right
	55360 429AB-	1							Left
11									WHEELHOUSE, Front Inner
	55176 858AK	1							Right
	55176 859AM	1							Left
12	55157 055AA	5							PIN, Push
13	55156 429AA	2							RETAINER, Applique
14	55360 718AA	2							SEAL, Fender To Cowl
15	55360 201AC	1							CUP, Jounce Bumper
-16	55197 186AC-	2							SILENCER, Fender Side

2006 Liberty (KJ)

SERIES	LINE	BODY	ENGINE	TRANSMISSION
H =HIGHLINE	T =JEEP - 2WD	74 =SPORT UTILITY 4-DR	EKG=3.7L V6 Eng.	DG6=4-Spd. Auto. 42RLE Trans.
M =MEDIUM	J =JEEP - 4WD		ENR=2.8L 4 Cyl Turbo Diesel Eng.	DGV=4-Spd. Auto. VLP Trans.
P =PREMIUM	U =JEEP - 4WD (RHD)		ENJ=2.5L 4 Cyl 16V Turbo Diesel Eng.	DGQ=5-Spd Auto. 5-45RFE Trans.
			ED1=2.4L 4 Cyl DOHC 16v SMPI Eng.	DEH=6-Speed Man. NSG370 Trans.
				DDD=5-Speed HD Man. Trans.
				DDK=5-Speed HD Man. Trans.

AR = Use as required - = Non illustrated part # = New this model year

Hood, Latch and Hinges
Figure SKJ-510

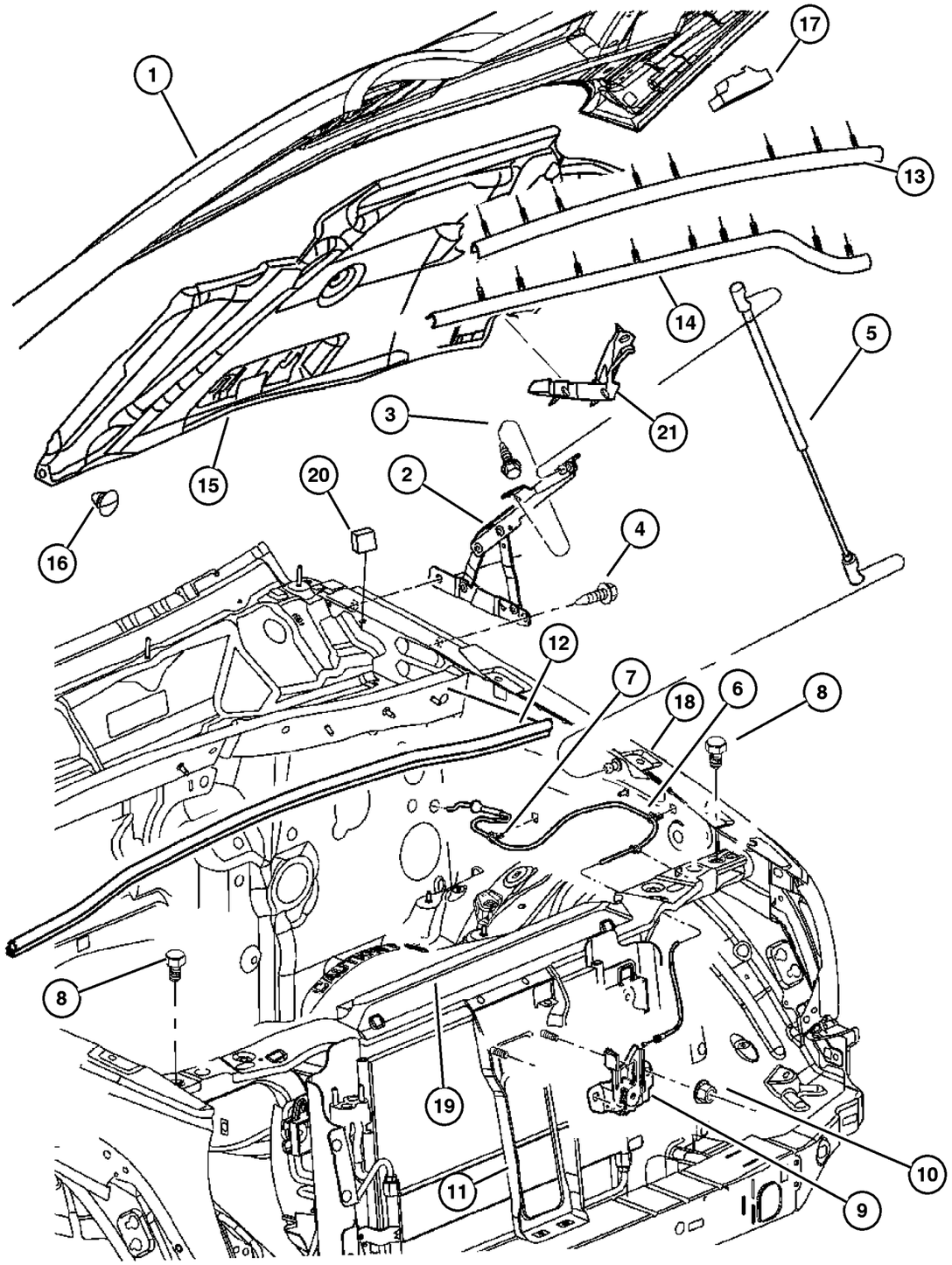

ITEM	PART NUMBER	QTY	LINE	SERIES	BODY	ENGINE	TRANS	TRIM	DESCRIPTION
1									HOOD
	55177 200AF	1							
	55360 667AD	1							Series 'M'
2									HINGE, Hood
	55176 928AE	1							Right
	55176 929AC	1							Left
3									SCREW AND WASHER, Hex Head, M6X1.00X19.00, (NOT SERVICED) (Not Serviced)
4	6505 940AA	4							SCREW, M8-1.25
5	55360 411AC	2							PROP, Hood
6	55360 280AF	1							CABLE, Hood Release
7	4814 094	2							CLIP, Hood Latch Release
8	4696 592	2							BUMPER, Hood
9	55176 926AC	1							LATCH, Hood
10	6503 102	2							NUT AND WASHER, Hex Nut-Coned Washer, M6 x 1.00
11									REINFORCEMENT, Hood Latch
	55360 681AB	1							Series 'M'
	55360 694AB	1							
12	55360 717AA	1							SEAL, Hood To Cowl
13	55360 714AB	1							SEAL, Hood To Radiator
14	55360 715AB	1							SEAL, Hood
15	55352 746AG	1							INSULATION, Hood
16	6504 135	9							PIN, Push In, M6.3x15 LG
17	55360 258AB	2							SEAL, Hood To Plenum
18									BRACKET, Ballstud
	55360 428AB	1							Right
	55360 429AB	1							Left
19	55176 763AF	1							CROSSMEMBER, Radiator
20									SEAL, A-Pillar Blocker
	55360 542AD	1							Right
	55360 543AD	1							Left
21	55360 551AC	1							SEAL, Air Inlet

2006 Liberty (KJ)

SERIES	LINE	BODY	ENGINE	TRANSMISSION
H =HIGHLINE	T =JEEP - 2WD	74 =SPORT UTILITY 4-DR	EKG=3.7L V6 Eng.	DG6=4-Spd. Auto. 42RLE Trans.
M =MEDIUM	J =JEEP - 4WD		ENR=2.8L 4 Cyl Turbo Diesel Eng.	DGV=4-Spd. Auto. VLP Trans.
P =PREMIUM	U =JEEP - 4WD (RHD)		ENJ=2.5L 4 Cyl 16V Turbo Diesel Eng.	DGQ=5-Spd Auto. 5-45RFE Trans.
			ED1=2.4L 4 Cyl DOHC 16v SMPI Eng.	DEH=6-Speed Man. NSG370 Trans.
				DDD=5-Speed HD Man. Trans.
				DDK=5-Speed HD Man. Trans.

Cowl and Dash Panel
Figure SKJ-610

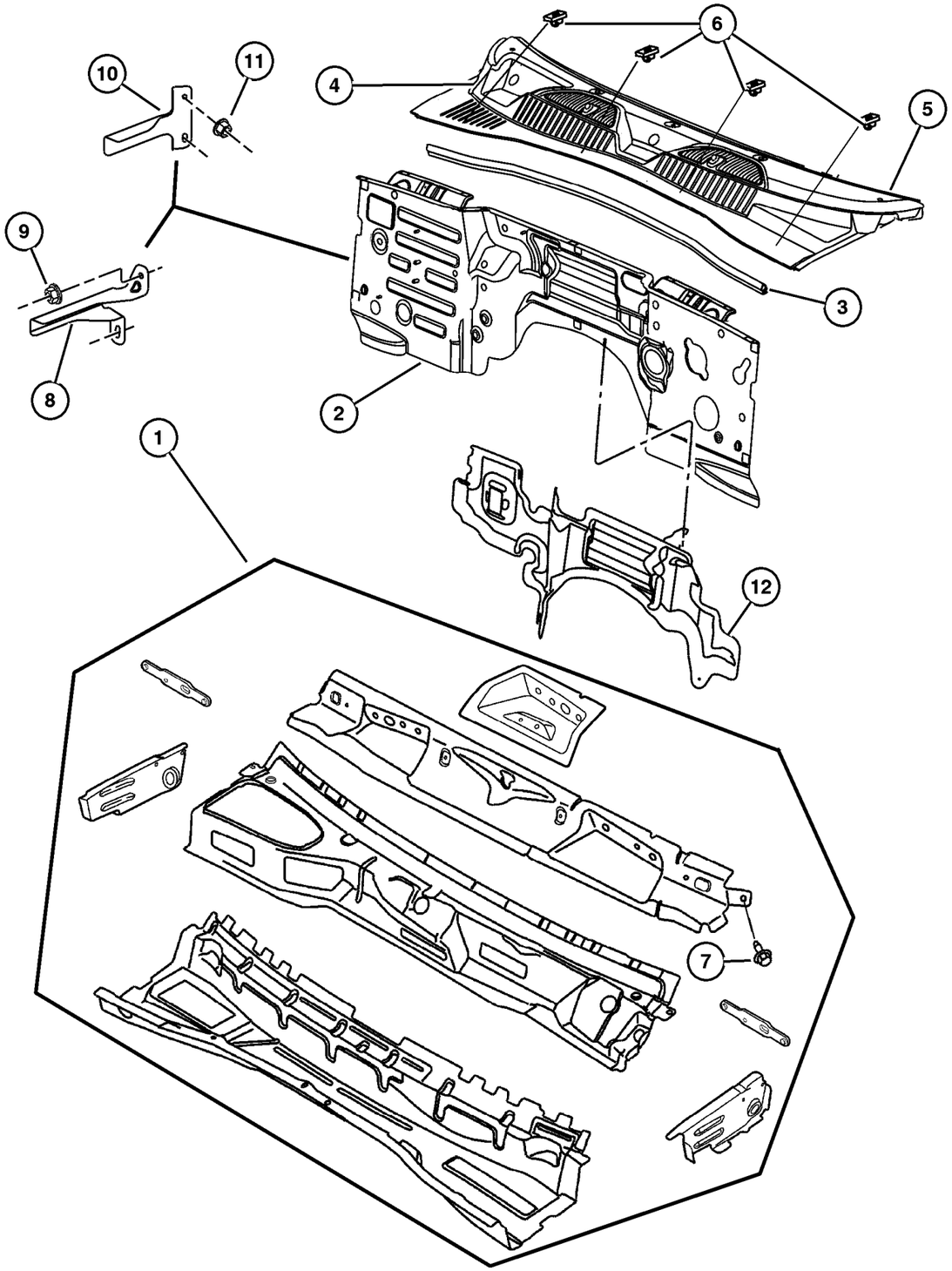

ITEM	PART NUMBER	QTY	LINE	SERIES	BODY	ENGINE	TRANS	TRIM	DESCRIPTION
1									PANEL, Plenum Complete
	55176 767AE	1	J, T						
	55176 776AD	1	U						
2									PANEL, Dash
	55177 300AD	1	J, T						
	55177 350AC	1	U						
3	55360 717AA	1							SEAL, Hood To Cowl
4									COVER, Cowl Grille
	55155 850AJ	1	U						
	55155 851AJ	1	J, T						
5	5071 165AA	1	J, T						SEAL, Cowl Screen To Windshield
6	6501 925	4							PIN, Push
7	6503 328	4							SCREW, Hex Head, M8x1.25x30
8	55360 202AA	1	J, T						BRACKET, Coolant Recovery Bottle
9	6503 504	2							NUT AND WASHER, Hex, M6x1
10	55360 203AA	1	U						BRACKET, Coolant Recovery Bottle
11	6101 467	2	U						NUT, Hex Flange, M8x1.25
12	55352 847AD	1	J, T						INSULATION, Dash Panel

2006 Liberty (KJ)

SERIES	LINE	BODY	ENGINE	TRANSMISSION
H =HIGHLINE	T =JEEP - 2WD	74 =SPORT UTILITY 4-DR	EKG=3.7L V6 Eng.	DG6=4-Spd. Auto. 42RLE Trans.
M =MEDIUM	J =JEEP - 4WD		ENR=2.8L 4 Cyl Turbo Diesel Eng.	DGV=4-Spd. Auto. VLP Trans.
P =PREMIUM	U =JEEP - 4WD (RHD)		ENJ=2.5L 4 Cyl 16V Turbo Diesel Eng.	DGQ=5-Spd Auto. 5-45RFE Trans.
			ED1=2.4L 4 Cyl DOHC 16v SMPI Eng.	DEH=6-Speed Man. NSG370 Trans.
				DDD=5-Speed HD Man. Trans.
				DDK=5-Speed HD Man. Trans.

Windshield, Quarter Window, Backlite and Mirror
Figure SKJ-710

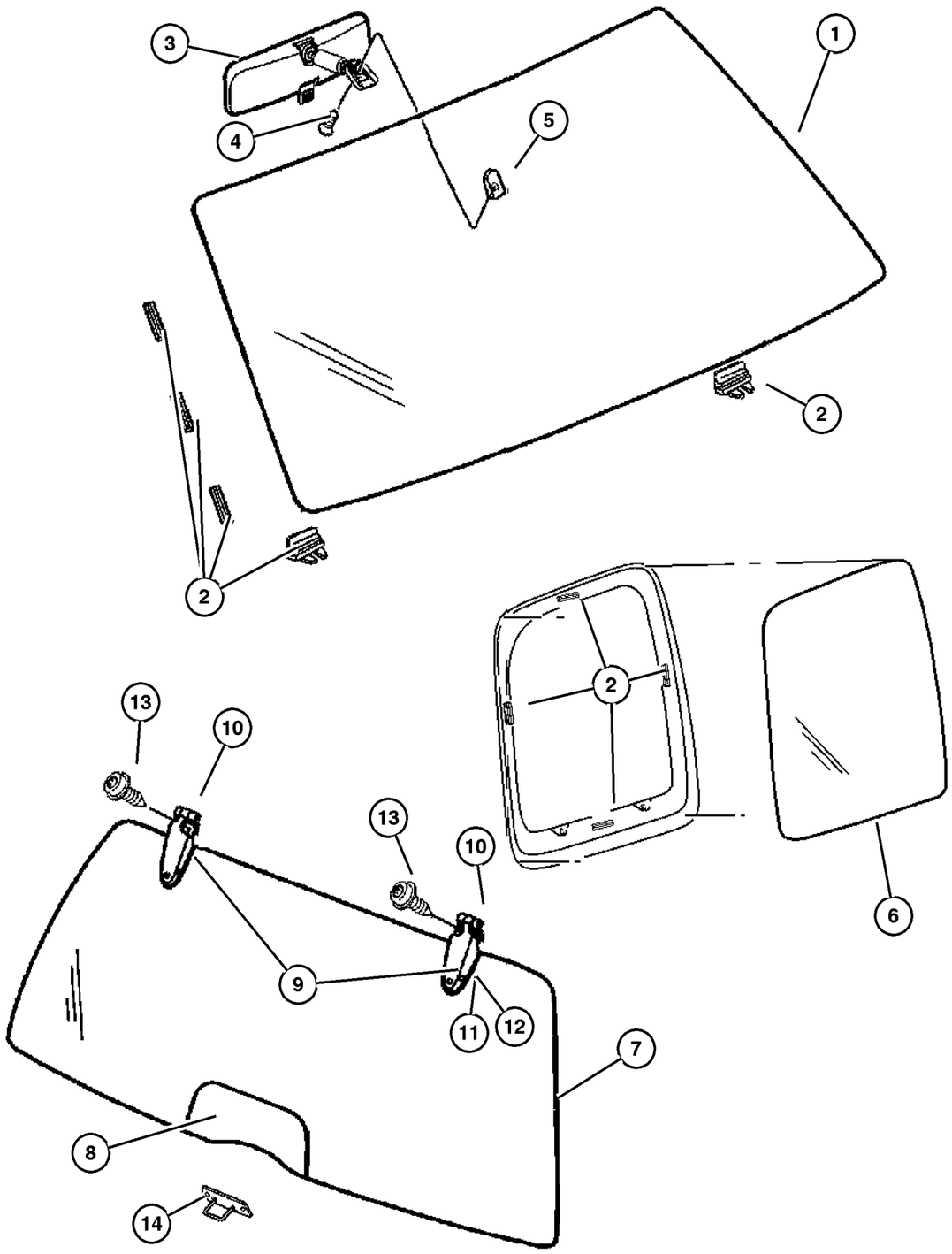

ITEM	PART NUMBER	QTY	LINE	SERIES	BODY	ENGINE	TRANS	TRIM	DESCRIPTION
Sales Codes:									
[GNA] = Rear View Day/Night									
[GNK] = Rear View Auto Dim									
[RSP] Uconnect Hands Free Communication									
1	5093 459AD	1							WINDSHIELD, 30-Lite
2	55360 509AA	4							SPACER, Windshield
3									MIRROR, Inside Rear View
	4805 332AC	1							[GNA] Day/Night
	5064 017AD	1							[GNK] Auto Dim and [RSP] Iconnect Hands Free Communication
	4805 572AC	1							[GKN] Auto Dim
4	5073 472AA	1							SCREW
5	5507 6401	1							BUTTON, Rear View Mirror
6									GLASS, Quarter
	55235 921AD	1							Tinted, Left
	55235 923AE	1							Privacy, Left
	55360 054AD	1							Tinted, With Antenna, Export, Right
	55360 056AE	1							Privacy,With Antenna,Export, Right
	55235 920AD	1							Tinted, Right
	55235 922AE	1							Privacy, Right
7									BACKLITE
	55360 340AV	1							Tinted
	55360 342AV	1							Privacy
8	55360 709AA	1							PAD, Flipper Glass
9									COVER, Hinge
	55360 366AE	1							Right
	55360 367AE	1							Left
10									HINGE, Liftglass
	55360 216AF	1							Right
	55360 217AF	1							Left
11	5529 6025	2							SCREW, Special Head, M6x1x12.7
12	5507 5164	4							GASKET, Liftgate Hinge
13	6507 883AA	4							SCREW, M5x.8x22.50
14									STRIKER, Liftgate Glass, Service with Backlite, (NOT SERVICED) (Not Serviced)
-15	6504 513	6							NUT AND WASHER, Hex Nut-Coned Washer, M6 x 1.00
-16									LABEL, Flipper Glass
	55360 573AA-	1							Use With Tinted Glass, French
	55360 582AA-	1							Use With Privacy Glass, French
	55360 583AA-	1							Use With Privacy Glass, Arabic

2006 Liberty (KJ)

SERIES	LINE	BODY	ENGINE	TRANSMISSION
H =HIGHLINE	T =JEEP - 2WD	74 =SPORT UTILITY 4-DR	EKG=3.7L V6 Eng.	DG6=4-Spd. Auto. 42RLE Trans.
M =MEDIUM	J =JEEP - 4WD		ENR=2.8L 4 Cyl Turbo Diesel Eng.	DGV=4-Spd. Auto. VLP Trans.
P =PREMIUM	U =JEEP - 4WD (RHD)		ENJ=2.5L 4 Cyl 16V Turbo Diesel Eng.	DGQ=5-Spd Auto. 5-45RFE Trans.
			ED1=2.4L 4 Cyl DOHC 16v SMPI Eng.	DEH=6-Speed Man. NSG370 Trans.
				DDD=5-Speed HD Man. Trans.
				DDK=5-Speed HD Man. Trans.

AR = Use as required - = Non illustrated part # = New this model year

Windshield, Quarter Window, Backlite and Mirror
Figure SKJ-710

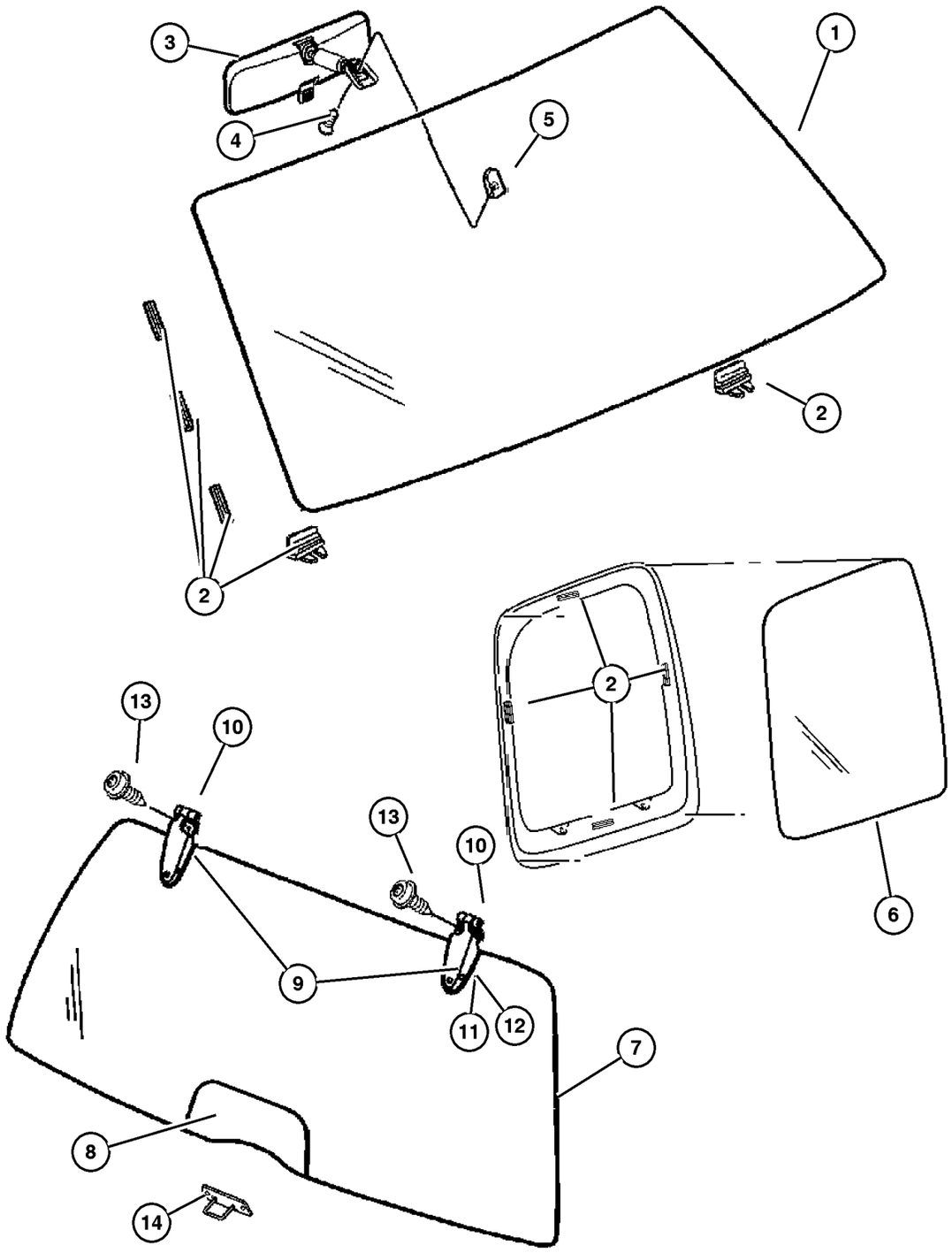

ITEM	PART NUMBER	QTY	LINE	SERIES	BODY	ENGINE	TRANS	TRIM	DESCRIPTION
-17	55360 561AA-	1							TAPE, Anti-Squeak

2006 Liberty (KJ)

SERIES	LINE	BODY	ENGINE	TRANSMISSION
H =HIGHLINE	T =JEEP - 2WD	74 =SPORT UTILITY 4-DR	EKG=3.7L V6 Eng.	DG6=4-Spd. Auto. 42RLE Trans.
M =MEDIUM	J =JEEP - 4WD		ENR=2.8L 4 Cyl Turbo Diesel Eng.	DGV=4-Spd. Auto. VLP Trans.
P =PREMIUM	U =JEEP - 4WD (RHD)		ENJ=2.5L 4 Cyl 16V Turbo Diesel Eng.	DGQ=5-Spd Auto. 5-45RFE Trans.
			ED1=2.4L 4 Cyl DOHC 16v SMPI Eng.	DEH=6-Speed Man. NSG370 Trans.
				DDD=5-Speed HD Man. Trans.
				DDK=5-Speed HD Man. Trans.

AR = Use as required - = Non illustrated part # = New this model year

September 20, 2005

« RETURN TO GROUP INDEX

Panels, Body Side
Figure SKJ-810

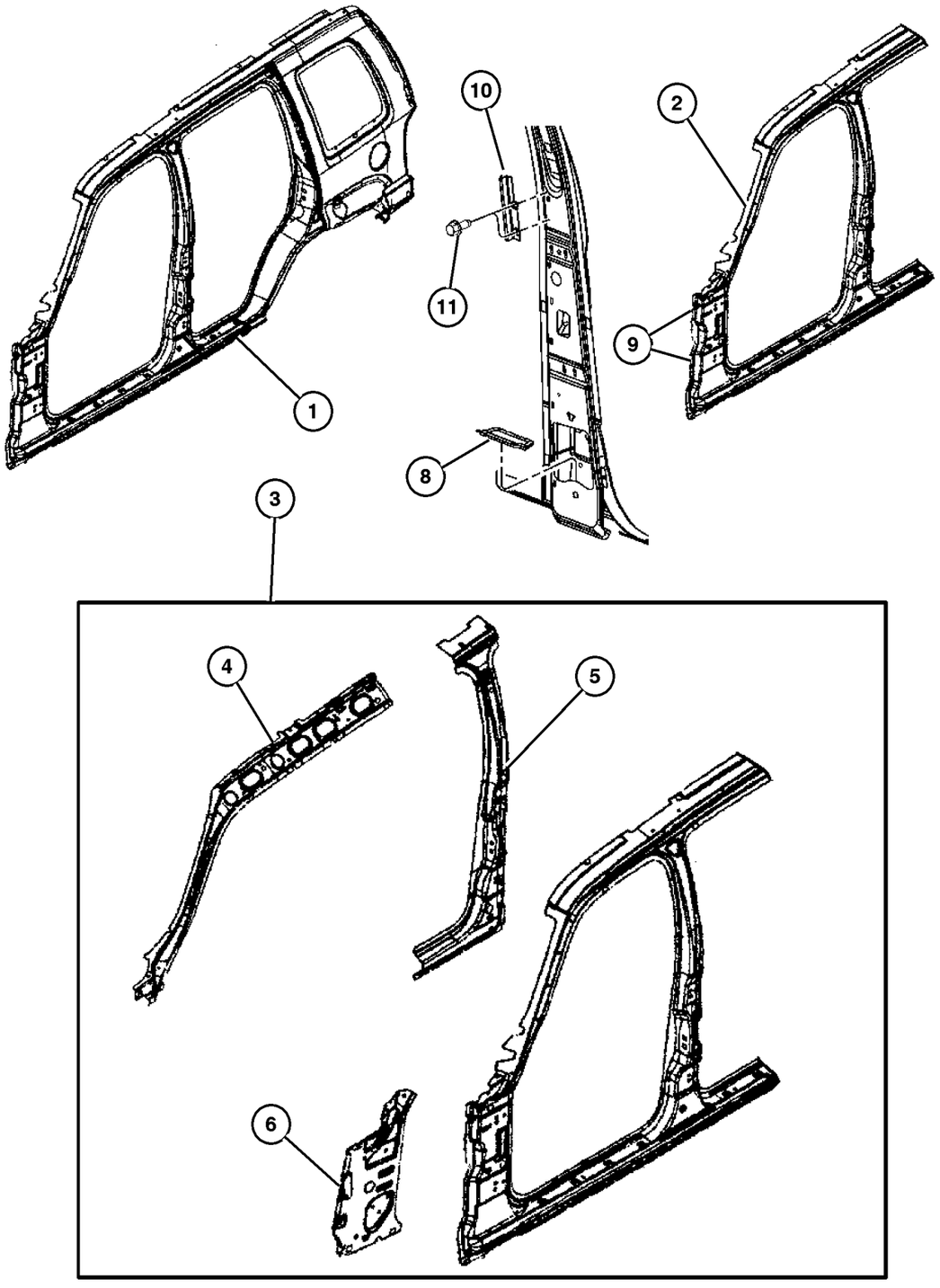

ITEM	PART NUMBER	QTY	LINE	SERIES	BODY	ENGINE	TRANS	TRIM	DESCRIPTION
1									APERTURE, Body Side, Complete
									Outer
	55176 962AG	1							Right
	55176 963AG	1							Left
2									PANEL PACKAGE, Body Side
									Aperture Front, Front Outer Only
	5170 004AA	1							Right
	5170 005AA	1							Left
3									PANEL PACKAGE, Body Side
									Aperture Front, Complete Inner and Outer Front
	5170 006AB	1							Right
	5170 007AB	1							Left
4									REINFORCEMENT, Front Pillar, Includes Roof Header Support
	55176 960AK	1							Right
	55176 961AK	1							Left
5									REINFORCEMENT, Center Pillar Inner
	55176 966AH	1							Right
	55176 967AH	1							Left
6									PANEL, Cowl
	55177 400AD	1							Right
	55177 401AD	1							Left
-7	6507 016AA-	AR							STUD
8									BAFFLE, B Pillar
	55360 196AE	1							Right
	55360 197AE	1							Left
9	55360 233AC	4							TAPPING PLATE, Door Hinge
10									BRACKET, Offset Impact
	55352 862AA	1							Right
	55352 863AA	1							Left
11	6101 945	4							SCREW

2006 Liberty (KJ)

SERIES	LINE	BODY	ENGINE	TRANSMISSION
H =HIGHLINE	T =JEEP - 2WD	74 =SPORT UTILITY 4-DR	EKG=3.7L V6 Eng.	DG6=4-Spd. Auto. 42RLE Trans.
M =MEDIUM	J =JEEP - 4WD		ENR=2.8L 4 Cyl Turbo Diesel Eng.	DGV=4-Spd. Auto. VLP Trans.
P =PREMIUM	U =JEEP - 4WD (RHD)		ENJ=2.5L 4 Cyl 16V Turbo Diesel Eng.	DGQ=5-Spd Auto. 5-45RFE Trans.
			ED1=2.4L 4 Cyl DOHC 16v SMPI Eng.	DEH=6-Speed Man. NSG370 Trans.
				DDD=5-Speed HD Man. Trans.
				DDK=5-Speed HD Man. Trans.

Panels, Rear Quarter
Figure SKJ-910

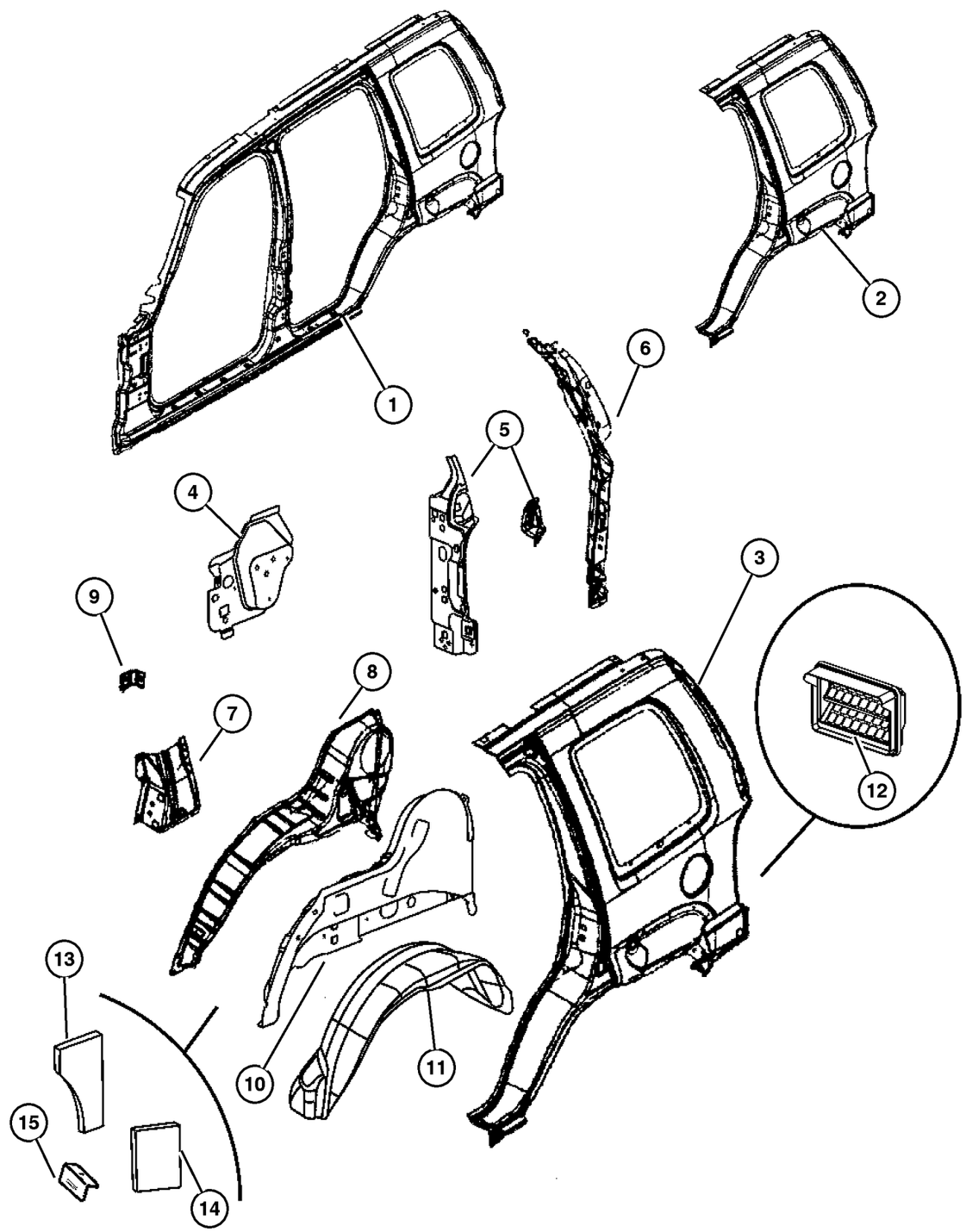

ITEM	PART NUMBER	QTY	LINE	SERIES	BODY	ENGINE	TRANS	TRIM	DESCRIPTION
1									APERTURE, Body Side, Complete
									Outer
	55176 962AG	1							Right
	55176 963AG	1							Left
2									PANEL, Quarter, Outer Only
	5170 008AA	1							Right
	5170 009AA	1							Left
3									PANEL, Quarter, Complete Inner And Outer
	5170 010AB	1							Right
	5170 011AB	1							Left
4									REINFORCEMENT, Seat Mount, Complete Outer
	55360 298AC	1							Right
	55360 299AC	1							Left
5									PANEL, Taillamp Mounting
	55360 452AC	1							Left
	55360 356AE	1							Right
6									REINFORCEMENT, D Pillar Upper
	55360 354AC	1							Right
	55360 381AB	1							Left
7									REINFORCEMENT, Striker Assembly
	55360 624AC	1							Right
	55360 625AC	1							Left
8									PANEL, Rear Wheelhouse, Outer
	55177 012AC	1							Right
	55177 013AC	1							Left
9	55360 463AA	2							REINFORCEMENT, Shoulder Belt
10									WHEELHOUSE, Rear Inner
	55360 406AE	1							Right
	55360 407AE	1							Left
11									LINER, Fender Side
	55360 146AD	1							Right
	55360 147AD	1							Left
12	55037 458AB	2							EXHAUSTER, Quarter Panel
13	55352 854AA	1							INSULATION, Side Panel, Right Side,Upper
14	55352 846AA	1							INSULATION, Side Panel, Right Side,Lower
15	55136 998AC	1							BRACKET, Wheel House

2006 Liberty (KJ)

SERIES	LINE	BODY	ENGINE	TRANSMISSION
H =HIGHLINE	T =JEEP - 2WD	74 =SPORT UTILITY 4-DR	EKG=3.7L V6 Eng.	DG6=4-Spd. Auto. 42RLE Trans.
M =MEDIUM	J =JEEP - 4WD		ENR=2.8L 4 Cyl Turbo Diesel Eng.	DGV=4-Spd. Auto. VLP Trans.
P =PREMIUM	U =JEEP - 4WD (RHD)		ENJ=2.5L 4 Cyl 16V Turbo Diesel Eng.	DGQ=5-Spd Auto. 5-45RFE Trans.
			ED1=2.4L 4 Cyl DOHC 16v SMPI Eng.	DEH=6-Speed Man. NSG370 Trans.
				DDD=5-Speed HD Man. Trans.
				DDK=5-Speed HD Man. Trans.

Fuel Filler Housing and Door
Figure SKJ-920

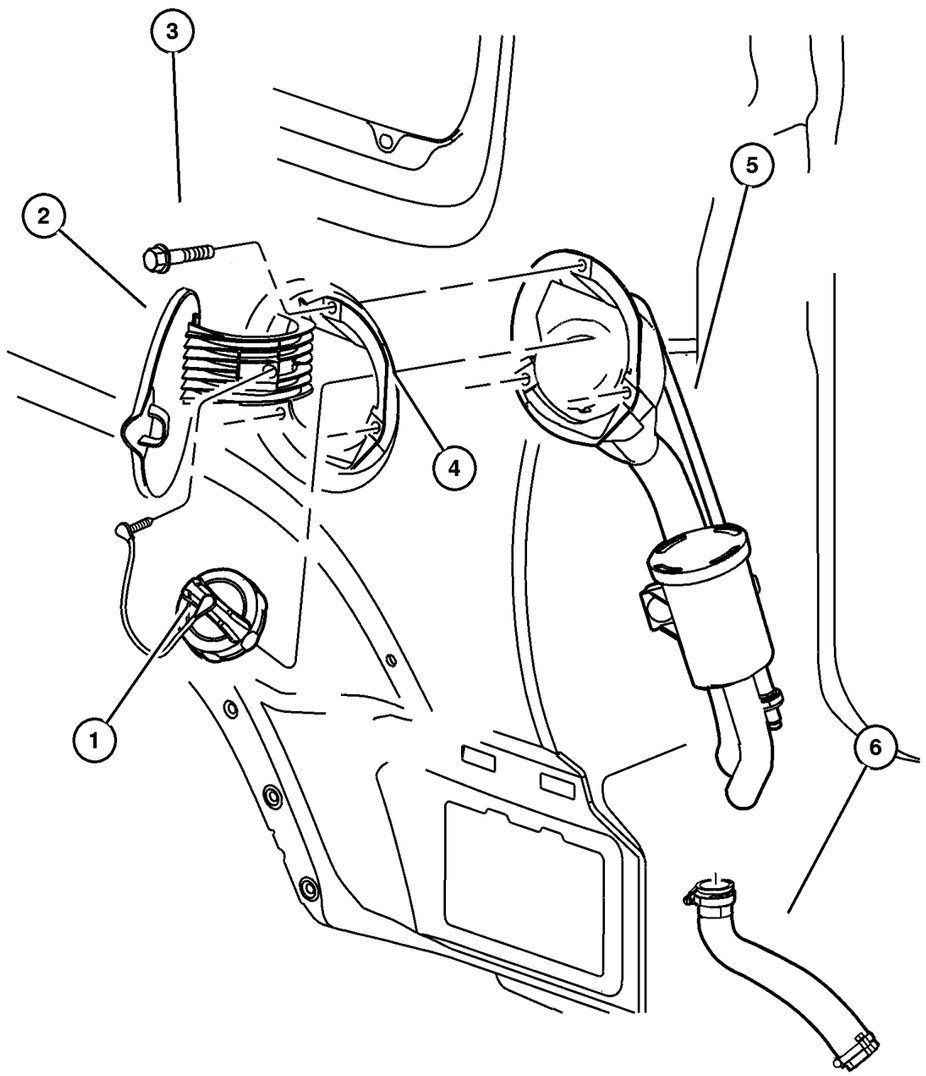

ITEM	PART NUMBER	QTY	LINE	SERIES	BODY	ENGINE	TRANS	TRIM	DESCRIPTION
1	5015 636AB	1	J, U						CAP KIT, Fuel Tank Locking
2	4674 991AH	1							DOOR, Fuel Filler Manual Access
3	6035 204	3							SCREW, Tapping, .19-16x.75
4	4716 571AD	1							HOUSING, Fuel Filler
5									TUBE, Fuel Filler
	52129 235AB	1							Diesel
	52129 234AB	1							
6	52129 236AB	1							HOSE, Fuel Filler
-7	4716 532	1							SPRING, Fuel Filler Door

2006 Liberty (KJ)

SERIES	LINE	BODY	ENGINE	TRANSMISSION
H =HIGHLINE	T =JEEP - 2WD	74 =SPORT UTILITY 4-DR	EKG=3.7L V6 Eng.	DG6=4-Spd. Auto. 42RLE Trans.
M =MEDIUM	J =JEEP - 4WD		ENR=2.8L 4 Cyl Turbo Diesel Eng.	DGV=4-Spd. Auto. VLP Trans.
P =PREMIUM	U =JEEP - 4WD (RHD)		ENJ=2.5L 4 Cyl 16V Turbo Diesel Eng.	DGQ=5-Spd Auto. 5-45RFE Trans.
			ED1=2.4L 4 Cyl DOHC 16v SMPI Eng.	DEH=6-Speed Man. NSG370 Trans.
				DDD=5-Speed HD Man. Trans.
				DDK=5-Speed HD Man. Trans.

Roof Panel
Figure SKJ-1110

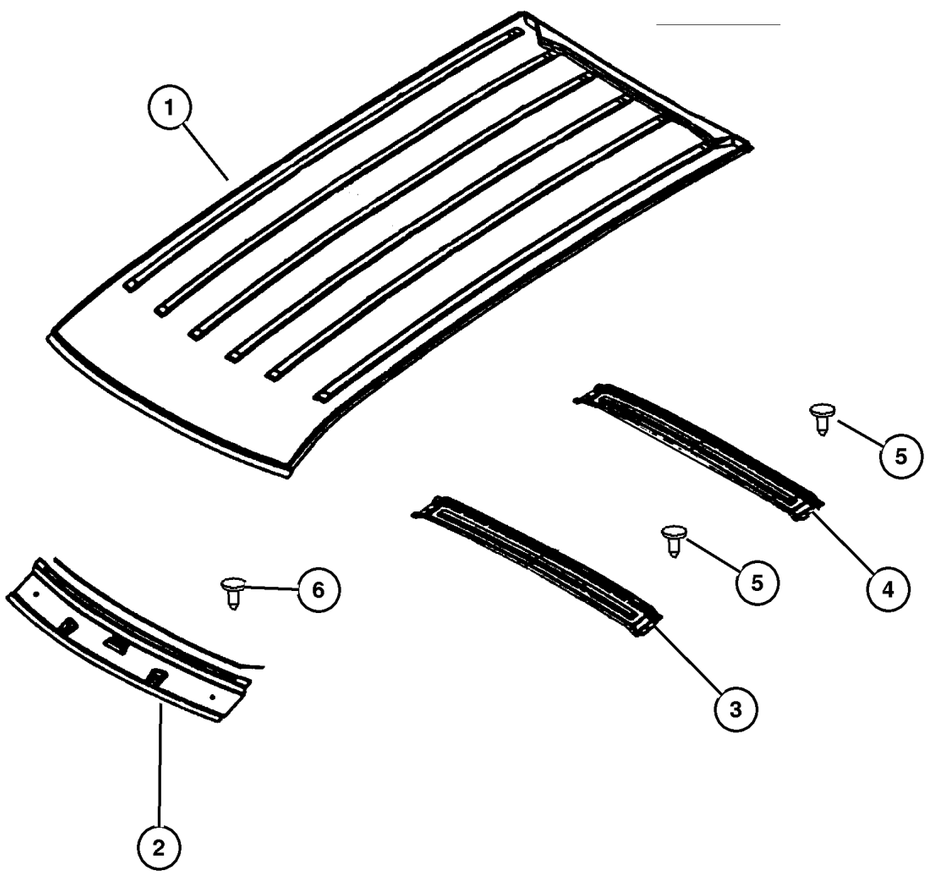

ITEM	PART NUMBER	QTY	LINE	SERIES	BODY	ENGINE	TRANS	TRIM	DESCRIPTION
1									PANEL, Roof
	55176 994AC	1							Without Sunroof
	55176 995AD	1							With Sunroof
2	55177 022AB	1							HEADER, Roof Front
3	55360 281AA	1							BOW, Roof, Without Sunroof
4	55176 998AA	1							BOW, Roof
5									PUSH PIN, M6.35x18.50, (NOT SERVICED) (Not Serviced)
6	6030 441	1							PIN, Retainer

2006 Liberty (KJ)

SERIES	LINE	BODY	ENGINE	TRANSMISSION
H =HIGHLINE	T =JEEP - 2WD	74 =SPORT UTILITY 4-DR	EKG=3.7L V6 Eng.	DG6=4-Spd. Auto. 42RLE Trans.
M =MEDIUM	J =JEEP - 4WD		ENR=2.8L 4 Cyl Turbo Diesel Eng.	DGV=4-Spd. Auto. VLP Trans.
P =PREMIUM	U =JEEP - 4WD (RHD)		ENJ=2.5L 4 Cyl 16V Turbo Diesel Eng.	DGQ=5-Spd Auto. 5-45RFE Trans.
			ED1=2.4L 4 Cyl DOHC 16v SMPI Eng.	DEH=6-Speed Man. NSG370 Trans.
				DDD=5-Speed HD Man. Trans.
				DDK=5-Speed HD Man. Trans.

Sunroof
Figure SKJ-1210

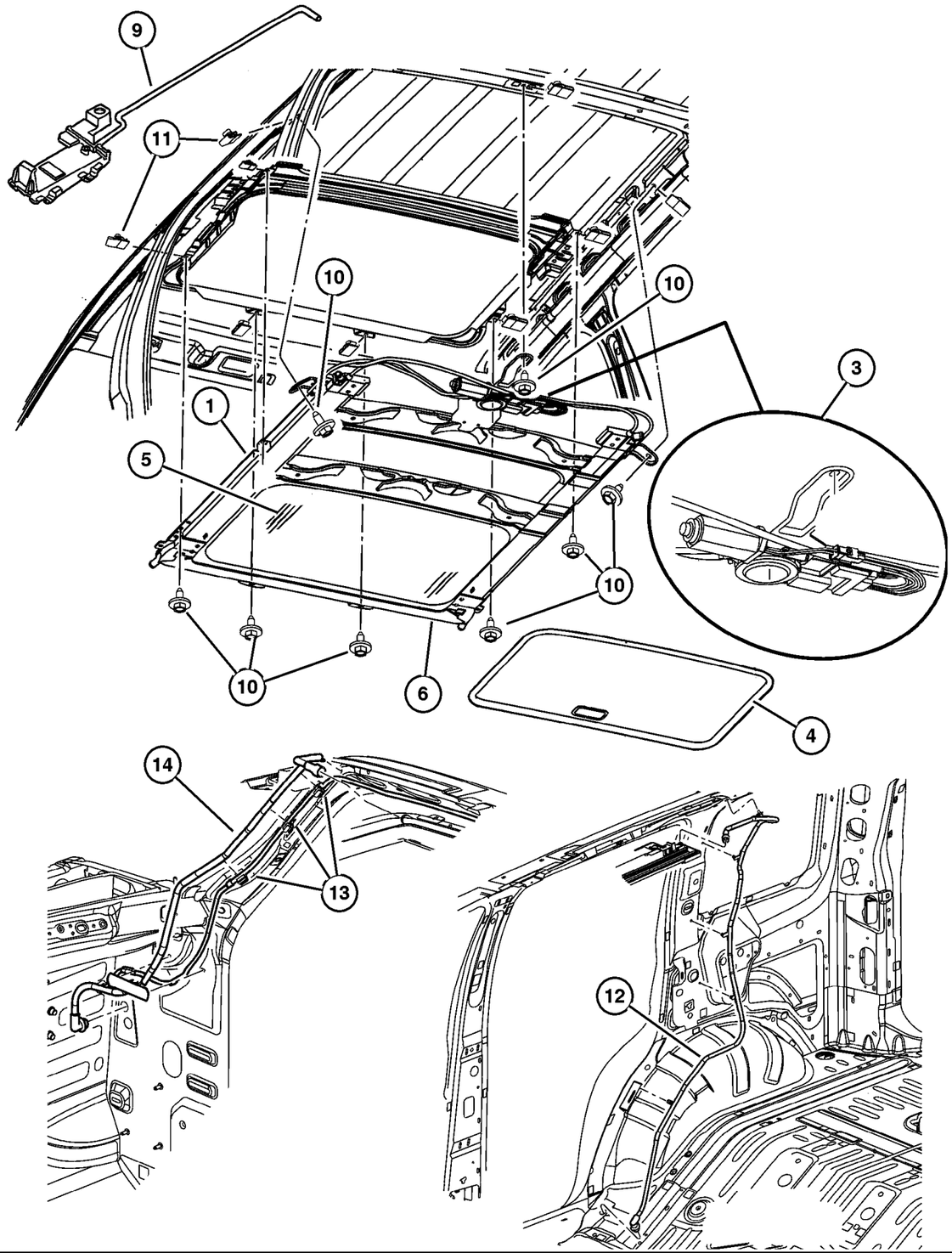

ITEM	PART NUMBER	QTY	LINE	SERIES	BODY	ENGINE	TRANS	TRIM	DESCRIPTION
Note: Guides 5066433AB attach to frame brace 5101844AA. Frame brace 5101844AA pulls sunshade open when in closed position.									
1	5101 963AA	1							MODULE, Sunroof
-2	5066 895AA-	1							DEFLECTOR, Sunroof Wind
3	5096 260AA	1							MOTOR, Sunroof, With Control Unit
4	UX06 BD1AA	1							SUNSHADE, Sunroof
5	5066 892AA	1							GLASS, Sunroof
6	5066 896AA	1							SEAL, Sunroof Glass
-7	UX09 BD1AA-	1							TRIM LACE, Sunroof
-8	5101 961AA-	1							WIRING, Sunroof
9	5066 433AC	1							GUIDE, Sunroof Track, Contains Right & Left Guides and 2 Push Nuts
10	6505 728AA	8							SCREW AND WASHER, Hex Head, M6x1x17
11	6506 035AA	10							NUT, U, M6x1
12									HOSE, Sunroof Drain, Rear
	55360 180AG	1							Right
	55360 181AG	1							Left
13	55360 393AA	3							CLIP, Hose
14									HOSE, Sunroof Drain, Front
	55360 178AB	1							Right
	55360 179AB	1							Left
-15	5101 844AA-	1							BRACE, WATER TROUGH

2006 Liberty (KJ)

SERIES	LINE	BODY	ENGINE	TRANSMISSION
H =HIGHLINE	T =JEEP - 2WD	74 =SPORT UTILITY 4-DR	EKG=3.7L V6 Eng.	DG6=4-Spd. Auto. 42RLE Trans.
M =MEDIUM	J =JEEP - 4WD		ENR=2.8L 4 Cyl Turbo Diesel Eng.	DGV=4-Spd. Auto. VLP Trans.
P =PREMIUM	U =JEEP - 4WD (RHD)		ENJ=2.5L 4 Cyl 16V Turbo Diesel Eng.	DGQ=5-Spd Auto. 5-45RFE Trans.
			ED1=2.4L 4 Cyl DOHC 16v SMPI Eng.	DEH=6-Speed Man. NSG370 Trans.
				DDD=5-Speed HD Man. Trans.
				DDK=5-Speed HD Man. Trans.

Swing Gate, Latch, and Hinges
Figure SKJ-1310

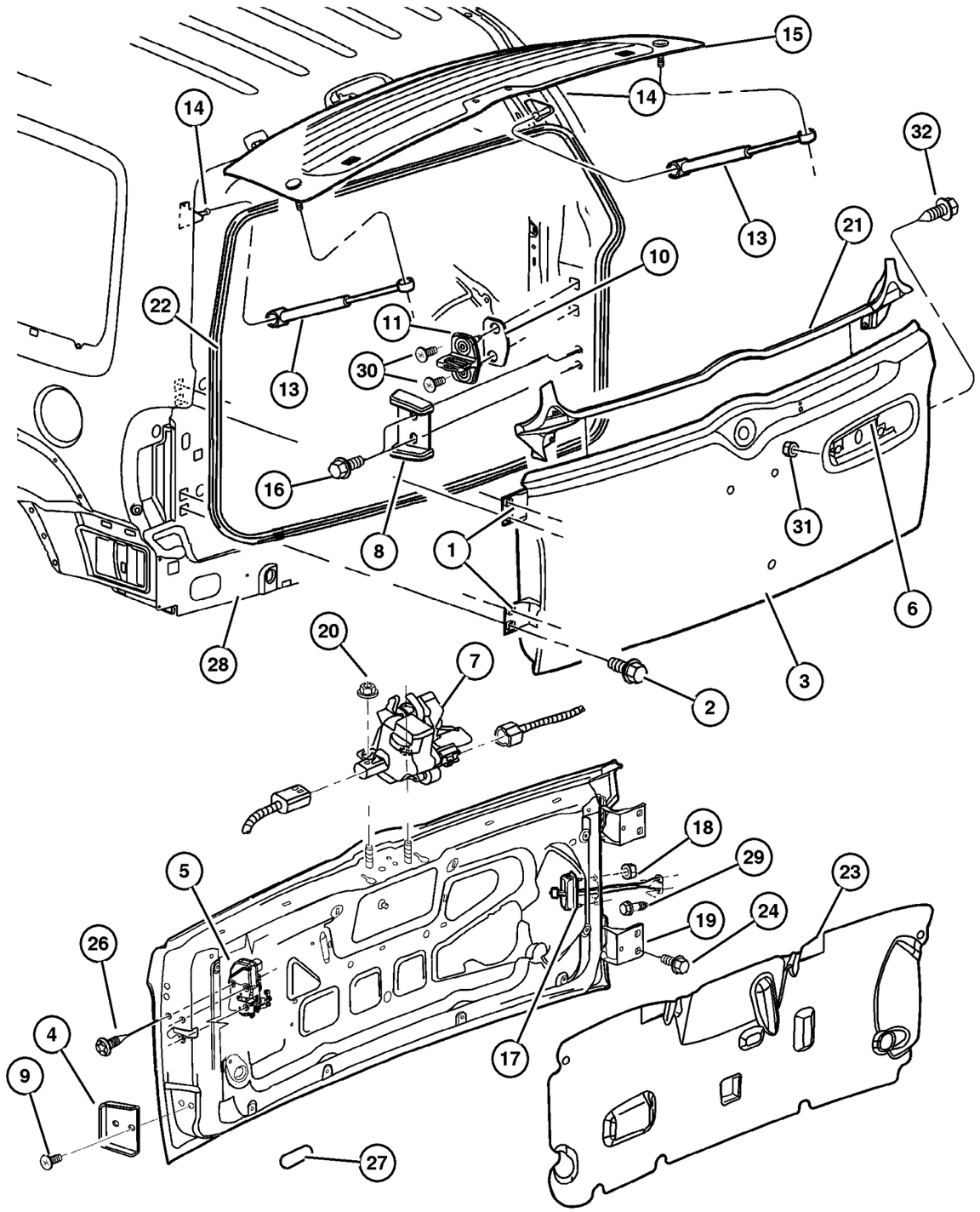

ITEM	PART NUMBER	QTY	LINE	SERIES	BODY	ENGINE	TRANS	TRIM	DESCRIPTION
Note: For Backlite Hinges and Associated Hardware, see Group SKJ Illustration 710									
1									HINGE, Liftgate
	52850 558AB	1							Upper
	52850 559AB	1							Lower
2									SCREW, M8X1.25X42.00, (NOT SERVICED) (Not Serviced)
3	55176 934AG	1							PANEL, Tailgate
4	52850 562AH	1							BUMPER, Tailgate
5	55360 641AD	1							LATCH, Tailgate
6									HANDLE, Exterior Tailgate
	5102 498AB	1	J, T						
		1	J, U						Export
7	55360 357AC	1							LATCH, Liftgate Glass
8	55360 324AC	1							STABILIZER, Swing Gate
9	6507 128AA	2							SCREW AND WASHER, Hex Head, M6 x 1.00 x 26.5
10	5507 5483	AR							SPACER, Door Latch Striker
11	4878 826AC	1							STRIKER, Door
-12	6503 692	2							SCREW, M8-1.25
13	55360 171AD	2							GAS CYLINDER, Liftgate Glass
14	55360 394AC	2							BRACKET, Ballstud
15									BACKLITE, Note: For Backlite Hinges and Associated Hardware, see Group SKJ Illustration 710
	55360 340AV	1							[GEJ]
	55360 342AV	1							[GEG]
16	6507 456AA	2							BOLT AND CONED WASHER, Hex Head, M6x20x14
17	55360 170AB	1							ARM, Cargo Door Check
18	6503 504	2							NUT AND WASHER, Hex, M6x1, Check Strap to Body
19									SCREW, Tapping, M6x1x20, (NOT SERVICED) (Not Serviced)
20	6503 102	2							NUT AND WASHER, Hex Nut-Coned Washer, M6 x 1.00
21	55360 065AB	1							WEATHERSEAL, Tailgate
22	55176 958AG	1							WEATHERSEAL, Tailgate
23	55360 309AC	1							WATERSHIELD, Liftgate Inner
24	6503 328	6							SCREW, Hex Head, M8x1.25x30
-25	4520 289	AR							SPACER, Door Latch Striker
26	6036 364AA	3							SCREW, Oval Head, Swing Gate Latch to Swing Gate
27	4646 527	2							PLUG, Deck Lid

2006 Liberty (KJ)

SERIES	LINE	BODY	ENGINE	TRANSMISSION
H =HIGHLINE	T =JEEP - 2WD	74 =SPORT UTILITY 4-DR	EKG=3.7L V6 Eng.	DG6=4-Spd. Auto. 42RLE Trans.
M =MEDIUM	J =JEEP - 4WD		ENR=2.8L 4 Cyl Turbo Diesel Eng.	DGV=4-Spd. Auto. VLP Trans.
P =PREMIUM	U =JEEP - 4WD (RHD)		ENJ=2.5L 4 Cyl 16V Turbo Diesel Eng.	DGQ=5-Spd Auto. 5-45RFE Trans.
			ED1=2.4L 4 Cyl DOHC 16v SMPI Eng.	DEH=6-Speed Man. NSG370 Trans.
				DDD=5-Speed HD Man. Trans.
				DDK=5-Speed HD Man. Trans.

AR = Use as required - = Non illustrated part # = New this model year

Swing Gate, Latch, and Hinges
Figure SKJ-1310

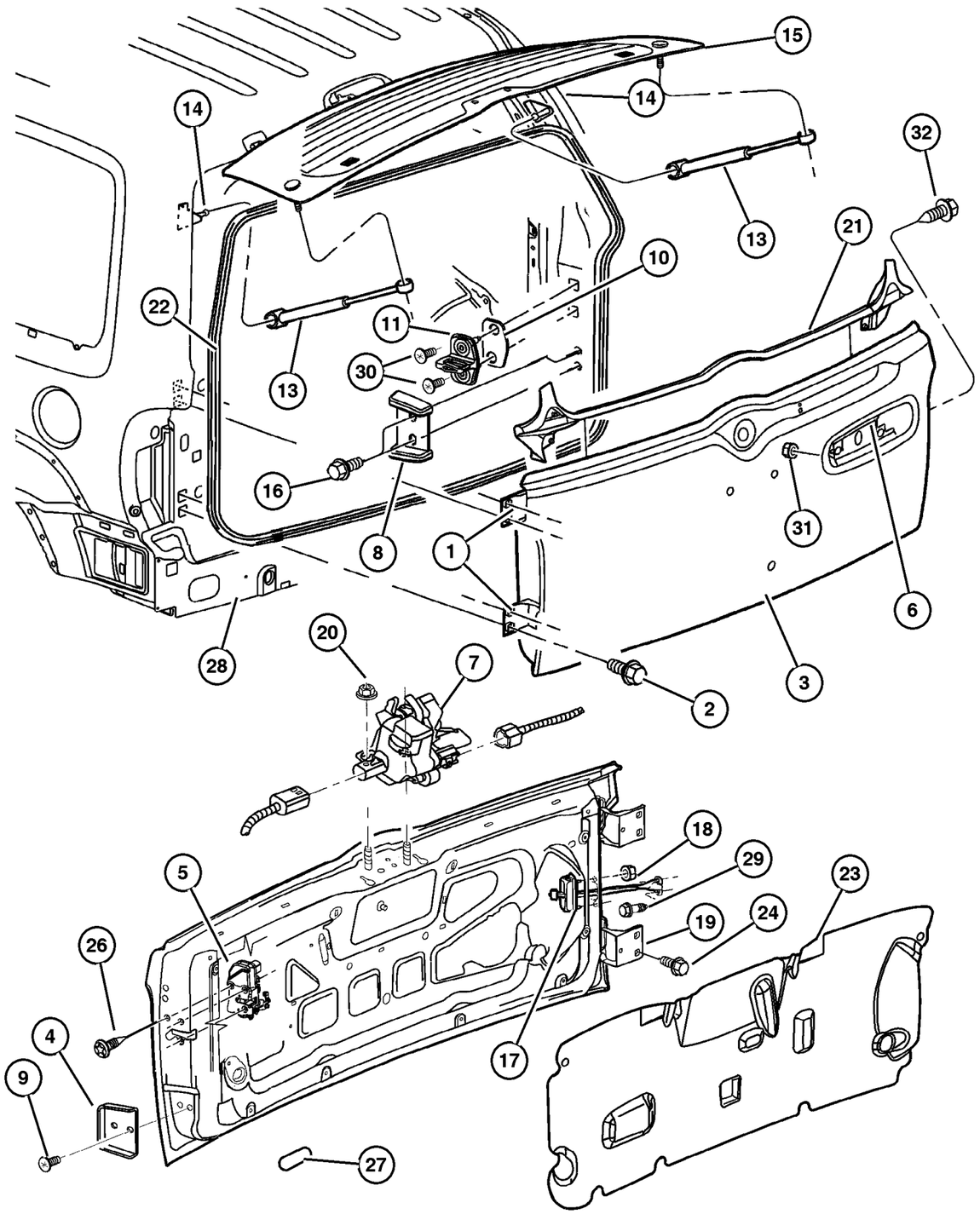

ITEM	PART NUMBER	QTY	LINE	SERIES	BODY	ENGINE	TRANS	TRIM	DESCRIPTION
28	55360 227AF	1							PANEL, Liftgate Opening, D-Ring Shaped, Contains Rear Gate Opening and Roof Header
29									SCREW, Hex Flange Head, M6x1.00x20, (NOT SERVICED) (Not Serviced)
30	6506 367AA	2							SCREW, M8-1.25
31	6503 226	2							NUT, Hex Flange, M5x.8
32	6507 011AA	2							SCREW

2006 Liberty (KJ)

SERIES	LINE	BODY	ENGINE	TRANSMISSION
H =HIGHLINE	T =JEEP - 2WD	74 =SPORT UTILITY 4-DR	EKG=3.7L V6 Eng.	DG6=4-Spd. Auto. 42RLE Trans.
M =MEDIUM	J =JEEP - 4WD		ENR=2.8L 4 Cyl Turbo Diesel Eng.	DGV=4-Spd. Auto. VLP Trans.
P =PREMIUM	U =JEEP - 4WD (RHD)		ENJ=2.5L 4 Cyl 16V Turbo Diesel Eng.	DGQ=5-Spd Auto. 5-45RFE Trans.
			ED1=2.4L 4 Cyl DOHC 16v SMPI Eng.	DEH=6-Speed Man. NSG370 Trans.
				DDD=5-Speed HD Man. Trans.
				DDK=5-Speed HD Man. Trans.

Luggage Rack
Figure SKJ-1610

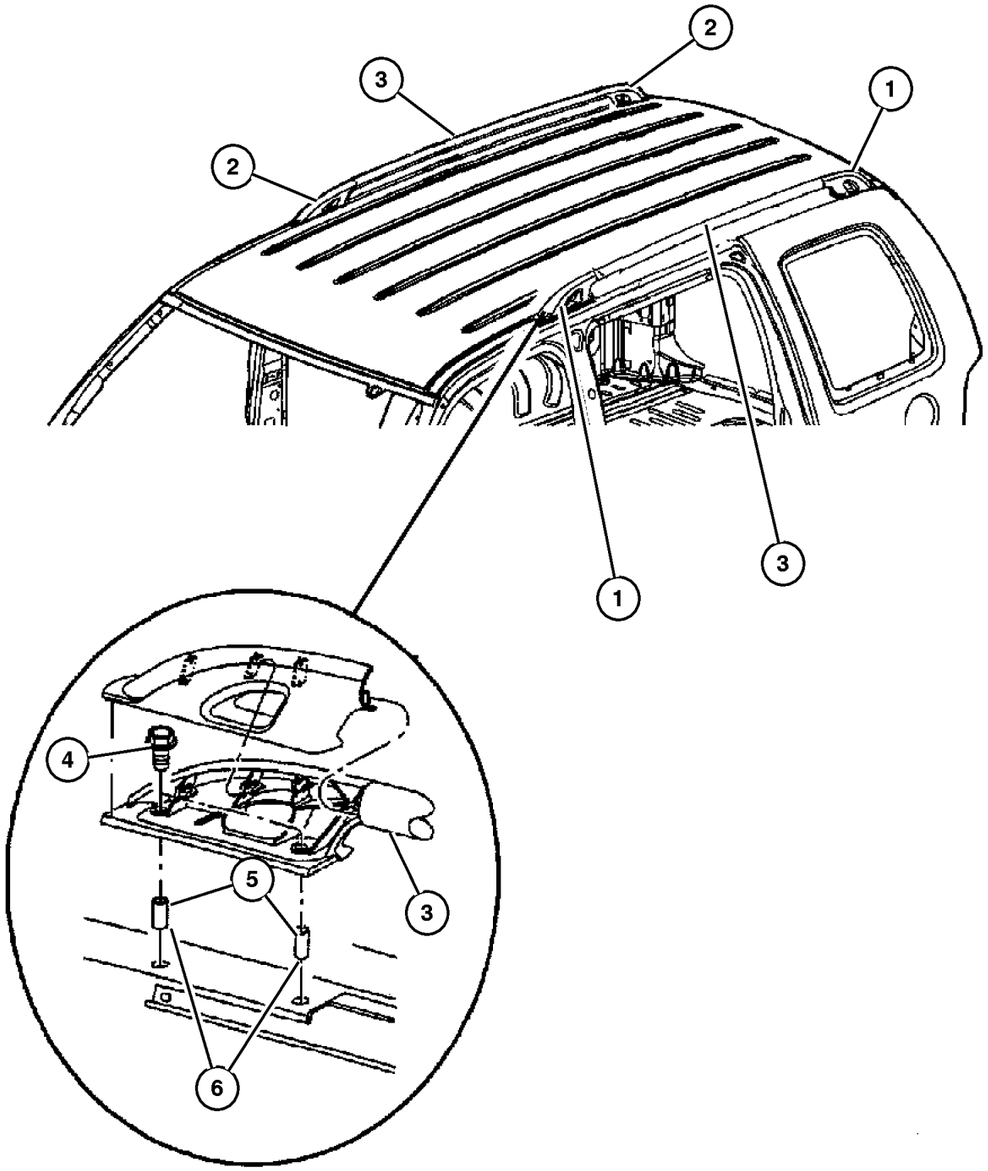

ITEM	PART NUMBER	QTY	LINE	SERIES	BODY	ENGINE	TRANS	TRIM	DESCRIPTION
Note: Production crossrails not used. See accessory catalog for crossrail package.									
1									COVER, Luggage Rack
	55360 425AE	1							[MWE], [MW1], Left,Front
	55360 427AC	1							[MWE], [MW1], Left,Rear
	55156 941AB	1							[MWZ], Left,Front
	55156 943AB	1							[MWZ], Left,Rear
2									COVER, Luggage Rack
	55360 424AE	1							[MWE], [MW1], Right Front
	55360 426AC	1							[MWE], [MW1], Right Rear
	55156 940AB	1							[MWZ], Right Front
	55156 942AB	1							[MWZ], Right Rear
3									RAIL, Luggage Rack Side
	55360 418AK	1							[MWE], Right
	55360 419AK	1							[MWE], Left
	55156 938AD	1							[MWZ], Right
	55156 939AD	1							[MWZ], Left
	55156 936AC	1							[MW1], Right
	55156 937AC	1							[MW1], Left
4	6507 086AA	8							SCREW
5	6503 245	6							RIVET, Hex Head
6	6506 489AA	2							RIVET, Round Head

2006 Liberty (KJ)

SERIES	LINE	BODY	ENGINE	TRANSMISSION
H =HIGHLINE	T =JEEP - 2WD	74 =SPORT UTILITY 4-DR	EKG=3.7L V6 Eng.	DG6=4-Spd. Auto. 42RLE Trans.
M =MEDIUM	J =JEEP - 4WD		ENR=2.8L 4 Cyl Turbo Diesel Eng.	DGV=4-Spd. Auto. VLP Trans.
P =PREMIUM	U =JEEP - 4WD (RHD)		ENJ=2.5L 4 Cyl 16V Turbo Diesel Eng.	DGQ=5-Spd Auto. 5-45RFE Trans.
			ED1=2.4L 4 Cyl DOHC 16v SMPI Eng.	DEH=6-Speed Man. NSG370 Trans.
				DDD=5-Speed HD Man. Trans.
				DDK=5-Speed HD Man. Trans.

Group – LBLS

Labels All Vehicle Locations

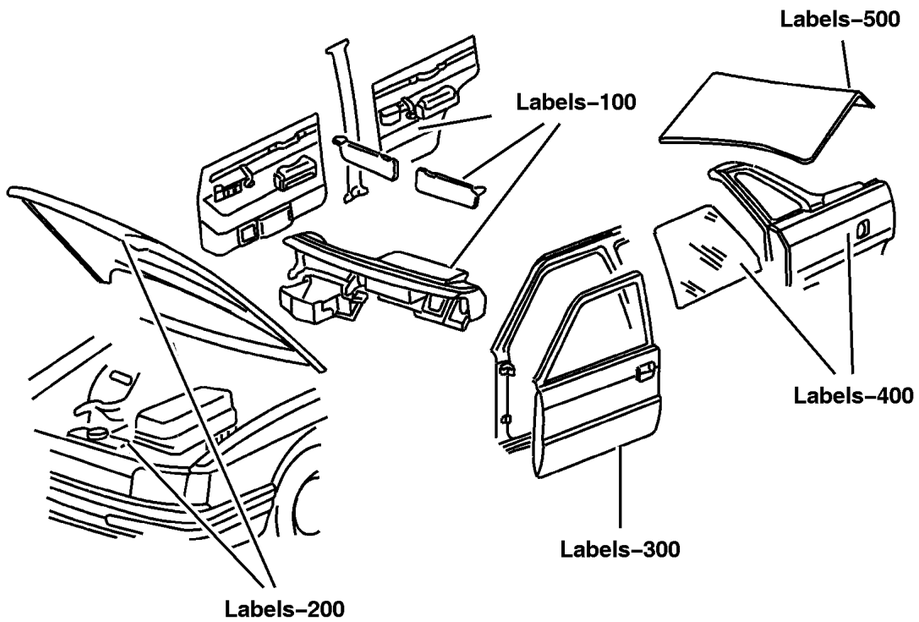

LBLS–100 Interior 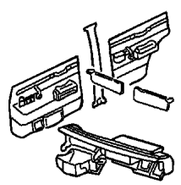	**LBLS–200** Under Hood 	**LBLS–300** Doors 	**LBLS–400** Exterior 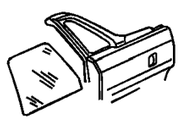
LBLS–500 Rear Cargo & Storage 			

GROUP LBLS - Labels All Vehicle Locations

Illustration Title — Group-Fig. No.

Interior
Instrument Panel, Visors/Trim . . . . . Fig. LBLS-110

Under Hood
Engine Compartment . . . . . Fig. LBLS-210

Doors
Door and Pillars . . . . . Fig. LBLS-310
Rear Glass . . . . . Fig. LBLS-320

Exterior
Fuel Door/Filler . . . . . Fig. LBLS-410

Rear Cargo & Storage
Jack Assembly . . . . . Fig. LBLS-510
Rear Cargo . . . . . Fig. LBLS-520

Instrument Panel, Visors/Trim
Figure LBLS-110

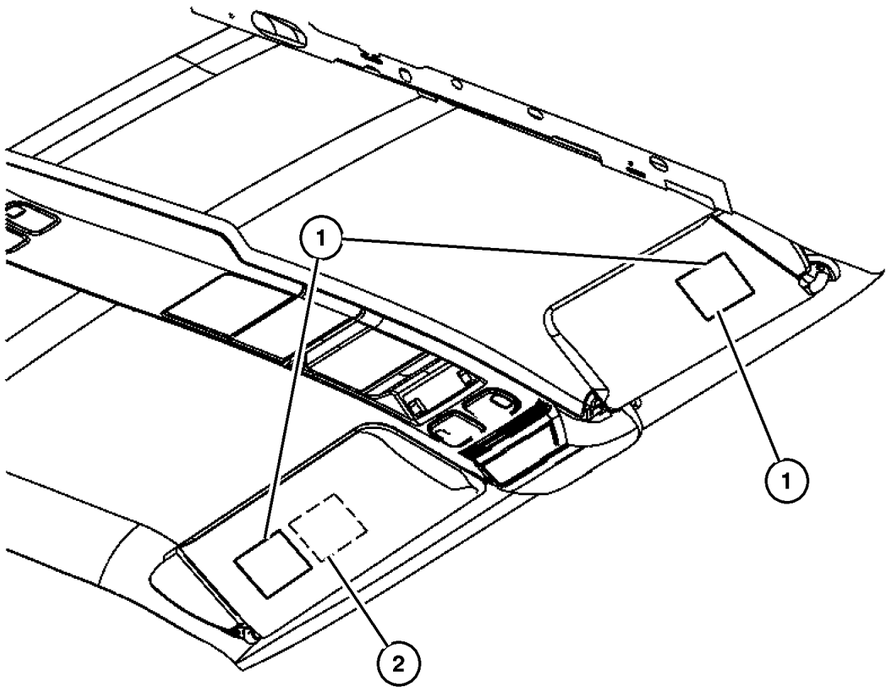

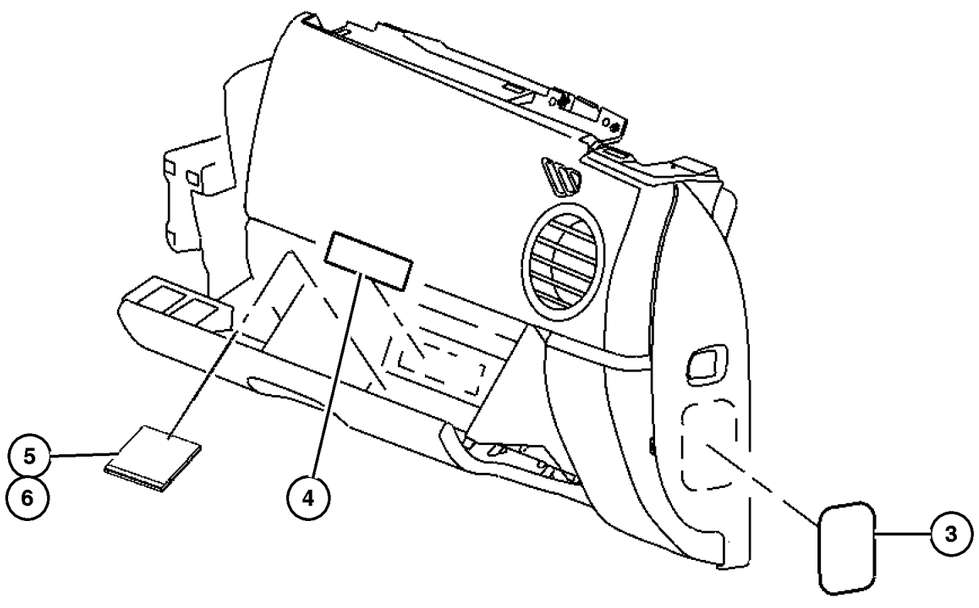

ITEM	PART NUMBER	QTY	LINE	SERIES	BODY	ENGINE	TRANS	TRIM	DESCRIPTION
1									LABEL, Air Bag Warning, Sun Visors
	4649 281AA	4							Seat Side (English-French)
	4664 294AA	1							Side (English-Arabic)
	5023 543AA	2							Sun Visor (English-Italian)
	5023 743AA	2							Sun Visor (English-German)
	5170 020AA	2							English-Arabic
	5108 000AA	2							English-French
	5023 540AA	2							Bilingual
	55197 154AA	2							English Speaking Export
2									LABEL, Warning, Drivers Visor
	53015 958AA	1							High Roll Over Risk English Arabic
	55352 825AA	1							High Roll Over Risk English-French
3	4680 556AA	1							DECAL, Seat Belt Safety, Seat Child Rear Facing Warning Pictogram
4									LABEL, Tire Pressure
	5056 246AA	1							Large Certificate and 1 Tire
	52088 963AB	1							UK English
5	5064 033AC	1							DVD, Geographic Database, North America
6									COMPACT DISC, Navigation
	5064 108AA	1							Europe
	5064 133AA	1							South Africa
-7	6032 217	2							RIVET, .197 Grip-.187-.375, VIN plate attaching

2006 Liberty (KJ)

SERIES	LINE	BODY	ENGINE	TRANSMISSION
H =HIGHLINE	T =JEEP - 2WD	74 =SPORT UTILITY 4-DR	EKG=3.7L V6 Eng.	DG6=4-Spd. Auto. 42RLE Trans.
M =MEDIUM	J =JEEP - 4WD		ENR=2.8L 4 Cyl Turbo Diesel Eng.	DGV=4-Spd. Auto. VLP Trans.
P =PREMIUM	U =JEEP - 4WD (RHD)		ENJ=2.5L 4 Cyl 16V Turbo Diesel Eng.	DGQ=5-Spd Auto. 5-45RFE Trans.
			ED1=2.4L 4 Cyl DOHC 16v SMPI Eng.	DEH=6-Speed Man. NSG370 Trans.
				DDD=5-Speed HD Man. Trans.
				DDK=5-Speed HD Man. Trans.

AR = Use as required - = Non illustrated part # = New this model year

Engine Compartment
Figure LBLS-210

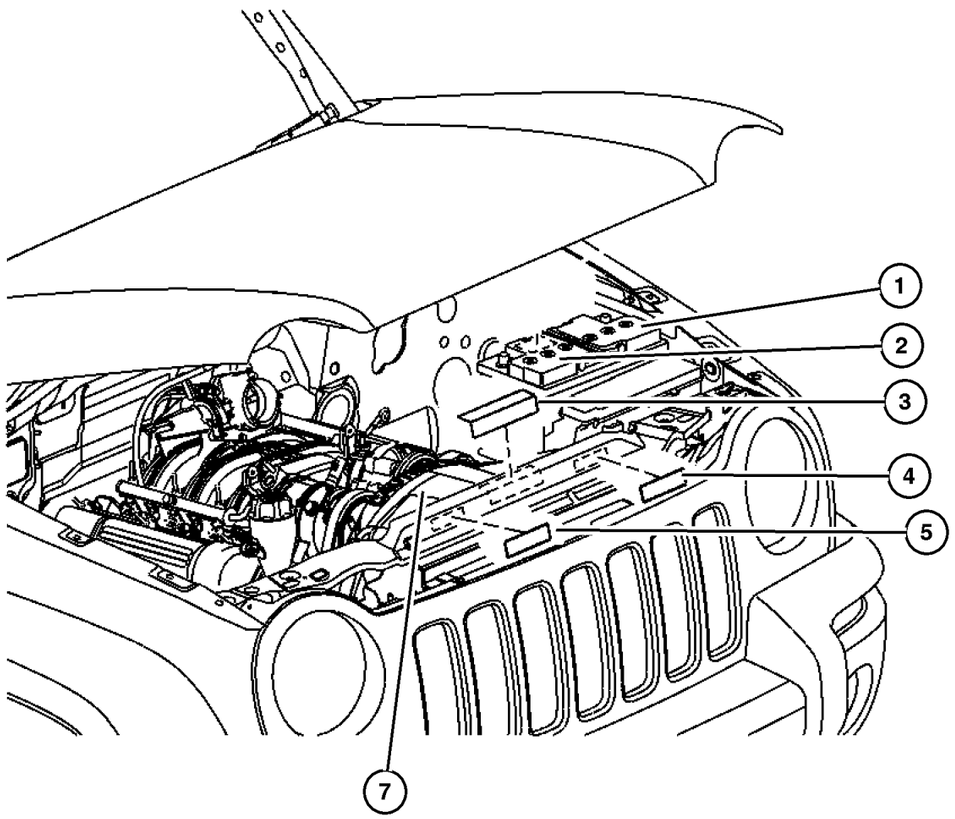

ITEM	PART NUMBER	QTY	LINE	SERIES	BODY	ENGINE	TRANS	TRIM	DESCRIPTION
NOTES: Sales Codes:									
[ED0] = All 2.2,2.5,2.4L 4 Cylinder Gas Engines									
[EK0] = All 3.7L V6 Cylinder Gas Engines									
[EN0] = All 4.5 Cylinder Turbo Diesel Engines									
1	5604 1046	1							LABEL, Battery, Danger Poison French
2	5604 1047	1							LABEL, Battery Jump Start, French
3									LABEL, Emission, (NOT SERVICED) (Not Serviced)
4									LABEL, Belt Routing
	53014 005AA	1				EN0			
	53031 758AA	1				ED0			
5	55037 464AE	1							LABEL, Refrigerant
-6	52128 784AA-	1							LABEL, Warning, Brake Fluid
7	53015 959AA	1							LABEL, Fan Caution, Arabic

2006 Liberty (KJ)

SERIES	LINE	BODY	ENGINE	TRANSMISSION
H =HIGHLINE	T =JEEP - 2WD	74 =SPORT UTILITY 4-DR	EKG=3.7L V6 Eng.	DG6=4-Spd. Auto. 42RLE Trans.
M =MEDIUM	J =JEEP - 4WD		ENR=2.8L 4 Cyl Turbo Diesel Eng.	DGV=4-Spd. Auto. VLP Trans.
P =PREMIUM	U =JEEP - 4WD (RHD)		ENJ=2.5L 4 Cyl 16V Turbo Diesel Eng.	DGQ=5-Spd Auto. 5-45RFE Trans.
			ED1=2.4L 4 Cyl DOHC 16v SMPI Eng.	DEH=6-Speed Man. NSG370 Trans.
				DDD=5-Speed HD Man. Trans.
				DDK=5-Speed HD Man. Trans.

Door and Pillars
Figure LBLS-310

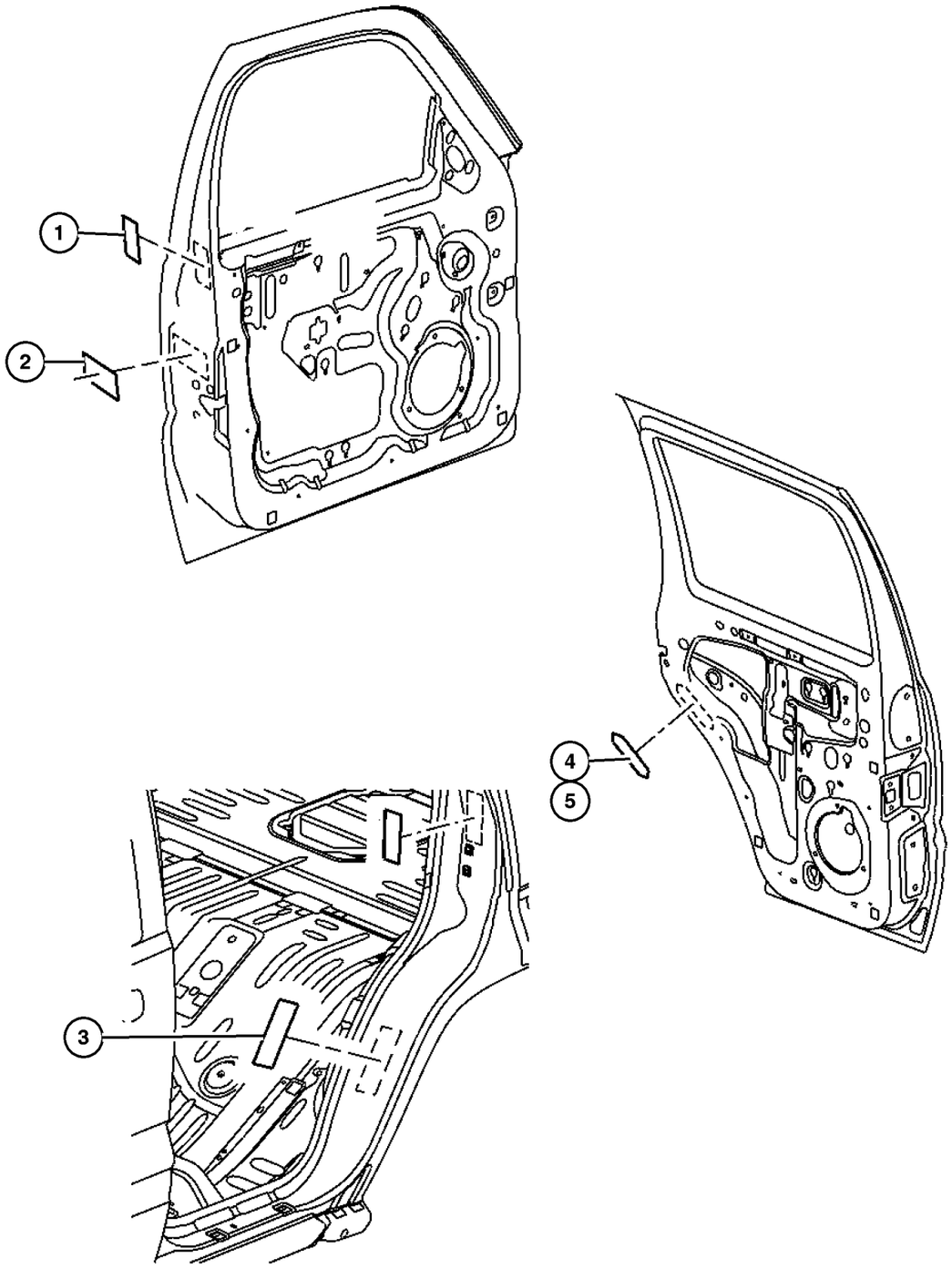

ITEM	PART NUMBER	QTY	LINE	SERIES	BODY	ENGINE	TRANS	TRIM	DESCRIPTION
1									LABEL, Air Bag Warning
	4649 282AA	4							Seat Side
	4649 281AA	4							Seat Side English-French
	4664 280AC	4							Seat Side English
	4664 294AA	1							Side English-Arabic
	5023 540AA	2							Sun Visor English-French
	5023 543AA	2							Sun Visor English-Italian
	5023 743AA	2							Sun Visor English-German
	5108 000AA	2							English-French
	5170 020AA	2							English-Arabic
	55197 154AA	2							English Speaking Export Countries
2	5056 246AA	1							LABEL, Tire Pressure
3									LABEL, Certification, (NOT SERVICED) (Not Serviced)
4									LABEL, Child Protection Lock, English
	4780 544AA	1							Right
	4780 545AA	1							Left
5									LABEL, Child Protection Lock, French
	4780 546AC	1							English-French, Right
	4780 547AC	1							English-French, Left

2006 Liberty (KJ)

SERIES	LINE	BODY	ENGINE	TRANSMISSION
H =HIGHLINE	T =JEEP - 2WD	74 =SPORT UTILITY 4-DR	EKG=3.7L V6 Eng.	DG6=4-Spd. Auto. 42RLE Trans.
M =MEDIUM	J =JEEP - 4WD		ENR=2.8L 4 Cyl Turbo Diesel Eng.	DGV=4-Spd. Auto. VLP Trans.
P =PREMIUM	U =JEEP - 4WD (RHD)		ENJ=2.5L 4 Cyl 16V Turbo Diesel Eng.	DGQ=5-Spd Auto. 5-45RFE Trans.
			ED1=2.4L 4 Cyl DOHC 16v SMPI Eng.	DEH=6-Speed Man. NSG370 Trans.
				DDD=5-Speed HD Man. Trans.
				DDK=5-Speed HD Man. Trans.

Rear Glass
Figure LBLS-320

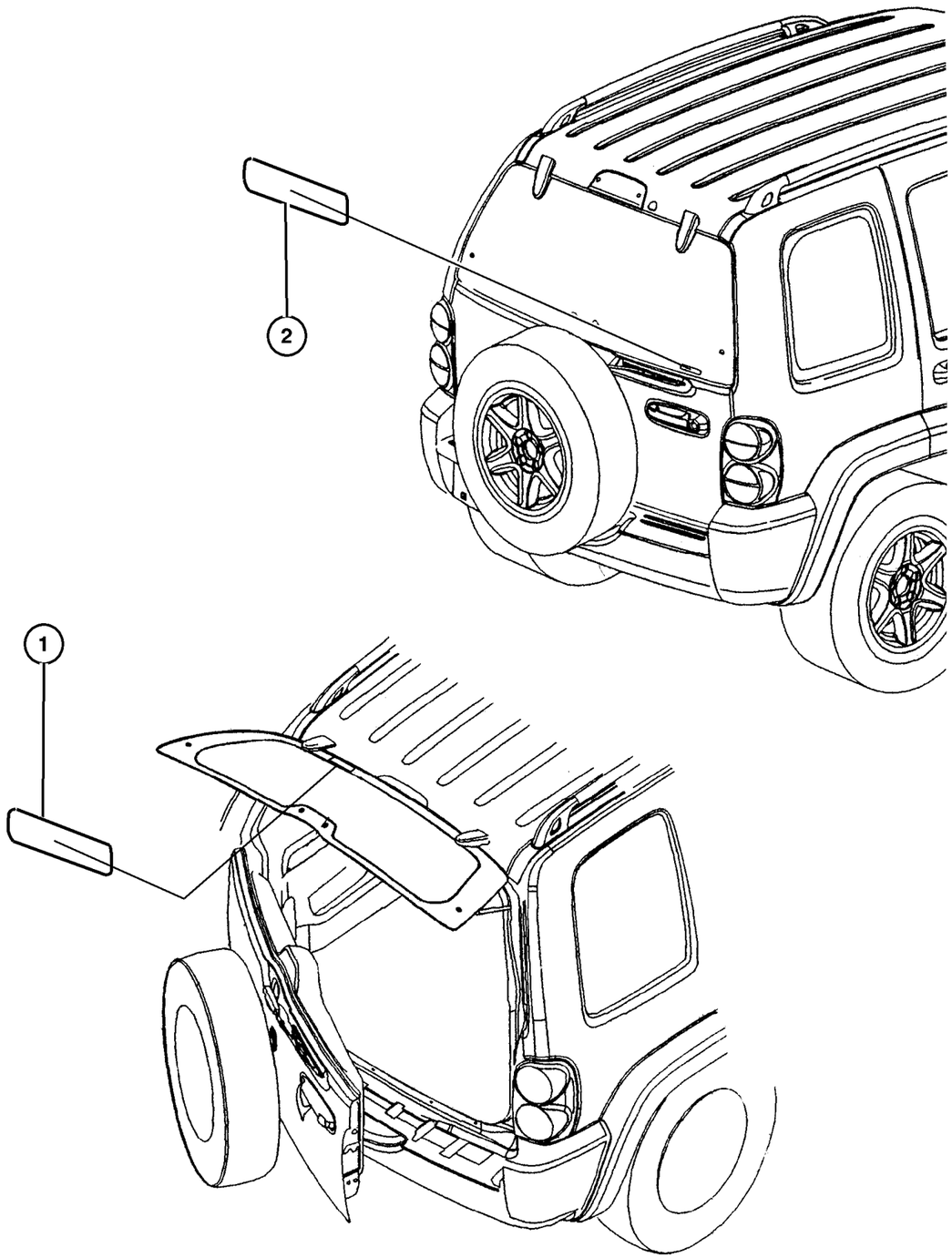

ITEM	PART NUMBER	QTY	LINE	SERIES	BODY	ENGINE	TRANS	TRIM	DESCRIPTION
1									LABEL, Flipper Glass, Flipper Glass Warning
	55360 573AA	1							With Tinted Glass
	55360 582AA	1							Privacy Glass French
	55360 583AA	1							Privacy Glass Arabic
2	5056 223AA	1							LABEL, Warning, Fire Extinguisher, Arabic

2006 Liberty (KJ)

SERIES	LINE	BODY	ENGINE	TRANSMISSION
H =HIGHLINE	T =JEEP - 2WD	74 =SPORT UTILITY 4-DR	EKG=3.7L V6 Eng.	DG6=4-Spd. Auto. 42RLE Trans.
M =MEDIUM	J =JEEP - 4WD		ENR=2.8L 4 Cyl Turbo Diesel Eng.	DGV=4-Spd. Auto. VLP Trans.
P =PREMIUM	U =JEEP - 4WD (RHD)		ENJ=2.5L 4 Cyl 16V Turbo Diesel Eng.	DGQ=5-Spd Auto. 5-45RFE Trans.
			ED1=2.4L 4 Cyl DOHC 16v SMPI Eng.	DEH=6-Speed Man. NSG370 Trans.
				DDD=5-Speed HD Man. Trans.
				DDK=5-Speed HD Man. Trans.

Fuel Door/Filler
Figure LBLS-410

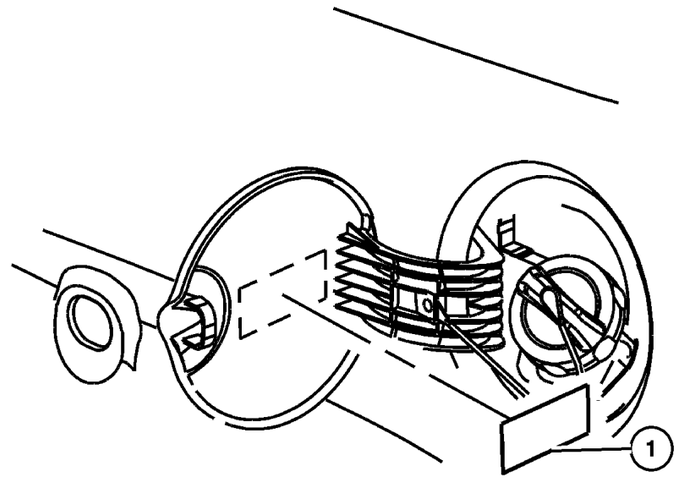

ITEM	PART NUMBER	QTY	LINE	SERIES	BODY	ENGINE	TRANS	TRIM	DESCRIPTION
1									LABEL, Fuel
	5529 5856	1				EK0			English and French
	J546 4900	1				EN0			Diesel

2006 Liberty (KJ)

SERIES	LINE	BODY	ENGINE	TRANSMISSION
H =HIGHLINE	T =JEEP - 2WD	74 =SPORT UTILITY 4-DR	EKG=3.7L V6 Eng.	DG6=4-Spd. Auto. 42RLE Trans.
M =MEDIUM	J =JEEP - 4WD		ENR=2.8L 4 Cyl Turbo Diesel Eng.	DGV=4-Spd. Auto. VLP Trans.
P =PREMIUM	U =JEEP - 4WD (RHD)		ENJ=2.5L 4 Cyl 16V Turbo Diesel Eng.	DGQ=5-Spd Auto. 5-45RFE Trans.
			ED1=2.4L 4 Cyl DOHC 16v SMPI Eng.	DEH=6-Speed Man. NSG370 Trans.
				DDD=5-Speed HD Man. Trans.
				DDK=5-Speed HD Man. Trans.

Jack Assembly
Figure LBLS-510

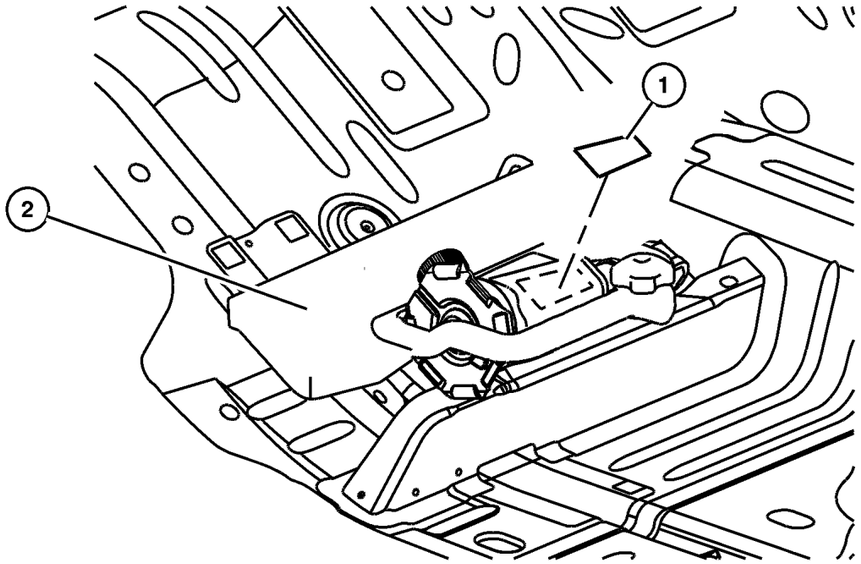

ITEM	PART NUMBER	QTY	LINE	SERIES	BODY	ENGINE	TRANS	TRIM	DESCRIPTION
NOTES: Sales Codes:									
[ABA] = Australia Equipment Group									
[ABD] = Middle East Equipment Group									
[XLR] = French/Canadia Language									
[XLS] = French/Parisian Language									
1	52059 371AB	1							LABEL, Jack Instructions, [ABA]
2									LABEL, Jack Caution
	52110 392AB	1							[XLR]
		1							[XLS]
	52110 400AB	1							[ABD]

2006 Liberty (KJ)

SERIES	LINE	BODY	ENGINE	TRANSMISSION
H =HIGHLINE	T =JEEP - 2WD	74 =SPORT UTILITY 4-DR	EKG=3.7L V6 Eng.	DG6=4-Spd. Auto. 42RLE Trans.
M =MEDIUM	J =JEEP - 4WD		ENR=2.8L 4 Cyl Turbo Diesel Eng.	DGV=4-Spd. Auto. VLP Trans.
P =PREMIUM	U =JEEP - 4WD (RHD)		ENJ=2.5L 4 Cyl 16V Turbo Diesel Eng.	DGQ=5-Spd Auto. 5-45RFE Trans.
			ED1=2.4L 4 Cyl DOHC 16v SMPI Eng.	DEH=6-Speed Man. NSG370 Trans.
				DDD=5-Speed HD Man. Trans.
				DDK=5-Speed HD Man. Trans.

Rear Cargo
Figure LBLS-520

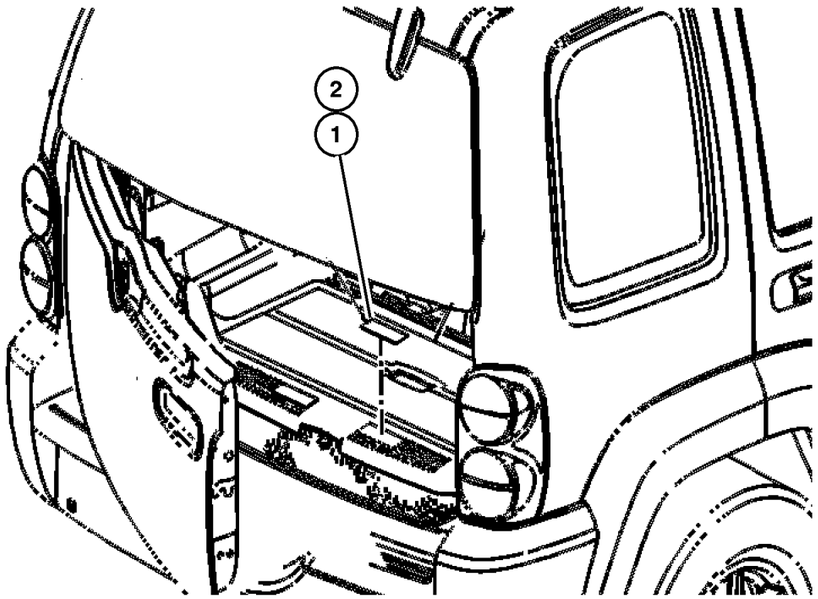

ITEM	PART NUMBER	QTY	LINE	SERIES	BODY	ENGINE	TRANS	TRIM	DESCRIPTION
1									LABEL, Warning
	55352 890AA	1							Cargo Organizer French
	55352 891AA	1							Cargo Organizer Arabic
2	52110 400AB	1							LABEL, Jack Caution, Arabic

2006 Liberty (KJ)

SERIES	LINE	BODY	ENGINE	TRANSMISSION
H =HIGHLINE	T =JEEP - 2WD	74 =SPORT UTILITY 4-DR	EKG=3.7L V6 Eng.	DG6=4-Spd. Auto. 42RLE Trans.
M =MEDIUM	J =JEEP - 4WD		ENR=2.8L 4 Cyl Turbo Diesel Eng.	DGV=4-Spd. Auto. VLP Trans.
P =PREMIUM	U =JEEP - 4WD (RHD)		ENJ=2.5L 4 Cyl 16V Turbo Diesel Eng.	DGQ=5-Spd Auto. 5-45RFE Trans.
			ED1=2.4L 4 Cyl DOHC 16v SMPI Eng.	DEH=6-Speed Man. NSG370 Trans.
				DDD=5-Speed HD Man. Trans.
				DDK=5-Speed HD Man. Trans.