SERVICE SPECIFICATIONS

	Page
CLUTCH	A-2
MANUAL TRANSMISSION (G40 and G52)	A-3
MANUAL TRANSMISSION (H41 and H55F)	A-5
MANUAL TRANSMISSION (R141F, R150F and R151F)	A-7
AUTOMATIC TRANSMISSION	A-9
TRANSFER	A-12
PROPELLER SHAFT	A-14
SUSPENSION AND AXLE	A-15
BRAKE SYSTEM	A-23
STEERING	A-25
BODY	A-28
LUBRICANT	A-29

CLUTCH

Specifications

Pedal height (from asphalt sheet)			181 mm	7.13 in.
Pedal freeplay	w/o Clutch booster		13 – 23 mm	0.51 – 0.91 in.
	w/ Clutch booster		15 – 30 mm	0.59 – 1.18 in.
Push rod play at pedal top			1 – 5 mm	0.04 – 0.20 in.
Booster air valve stroke at pedal top			5 – 9 mm	0.20 – 0.35 in.
Booster push rod to piston clearance		w/ SST	0 mm	0 in.
Disc rivet head depth		Limit	0.3 mm	0.012 in.
Disc runout		Limit	0.8 mm	0.031 in.
Diaphragm spring tip alignment		Limit	1.0 mm	0.039 in.
Diaphragm spring finger wear	Depth	Limit	0.6 mm	0.024 in
	Width	Limit	5.0 mm	0.197 in
Flywheel runout		Limit	0.2 mm	0.008 in.

Torque Specifications

Part tightened	kg-cm	ft-lb	N·m
Master cylinder × Body	80	69 in.-lb	7.8
Clutch line union	155	11	15
Clevis lock nut	250	18	25
Master cylinder × Clutch booster	130	9	13
Clutch Booster × Bracket	130	9	13
Bracket × Body	130	9	13
Accumulator bracket × Accumulator housing	55	48 in.-lb	5.4
Accumulator line union	155	11	15
Accumulator bleeder plug	110	8	11
Accumulator bracket × Transmission	120	9	12
(2L-T Engine Europe RHD Models Only)	700	51	69
Release cylinder set bolt	120	9	12
Release cylinder bleeder plug	110	8	11
Clutch cover × Flywheel	195	14	19
Master cylinder union bolt	250	18	25

MANUAL TRANSMISSION (R141F, R150F and R151F)

Specifications

Output shaft			
1st gear journal diameter	Limit	38.860 mm	1.5299 in
2nd gear journal diameter	Limit	46 860 mm	1.8449 in
3rd gear journal diameter	Limit	37.860 mm	1 4905 in
Flange thickness	Limit	4.70 mm	0 1850 in
Runout	Limit	0 06 mm	0.0024 in.
Counter gear			
Roller bearing journal diameter	Limit	27 860 mm	1 0968 in.
Gear thrust clearance			
1st	STD	0.10 – 0 45 mm	0.0039 – 0.0177 in.
	Limit	0 50 mm	0 0197 in.
2nd & 3rd	STD	0.10 – 0 25 mm	0 0039 – 0 0098 in
	Limit	0.30 mm	0 0118 in.
Counter 5th	STD	0.10 – 0.35 mm	0.0039 – 0.0138 in
	Limit	0.40 mm	0.0157 in
Gear oil clearance			
1st	STD	0 020 – 0 073 mm	0.0008 – 0.0029 in
2nd, 3rd & Counter 5th	STD	0.015 – 0 068 mm	0 0006 – 0.0027 in.
1st, 2nd, 3rd & Counter 5th	Limit	0 16 mm	0 0063 in.
Reverse	STD	0 040 – 0 082 mm	0.0016 – 0.0032 in
	Limit	0.13 mm	0.0051 in.
Shift fork to hub sleeve clearance	Limit	1.0 mm	0.039 in.
Synchronizer ring to gear clearance	STD	0 8 – 1 6 mm	0.031 – 0.063 in
	Limit	0 6 mm	0 024 in.
Oil seal drive in depth			
Front bearing retainer		10.5 – 11.5 mm	0 413 – 0.453 in.
Speedometer driven gear		25 mm	0.98 in.
Input shaft to synchronizer ring	STD	0.8 – 1.6 mm	0 031 – 0.063 in
	Limit	0.6 mm	0 024 in.
Reverse idler gear to shift arm shoe	STD	0.05 – 0 25 mm	0.0020 – 0 0098 in.
	Limit	0 5 mm	0.020 in.
Input shaft snap ring thickness	Mark		
	A	2 10 – 2.15 mm	0.0827 – 0 0846 in.
	B	2 15 – 2 20 mm	0 0846 – 0.0866 in.
	C	2 20 – 2.25 mm	0 0866 – 0.0886 in
	D	2.25 – 2 30 mm	0.0886 – 0.0906 in
	E	2.30 – 2 35 mm	0.0906 – 0 0925 in
	F	2.35 – 2 40 mm	0.0925 – 0.0945 in
	G	2 40 – 2.45 mm	0.0945 – 0.0965 in.
Counter gear snap ring (Front bearing)	Mark		
	A	2 00 – 2.05 mm	0 0787 – 0.0807 in
	B	2 05 – 2.10 mm	0.0807 – 0 0827 in.
	C	2.10 – 2 15 mm	0.0827 – 0.0846 in.
	D	2 15 – 2 20 mm	0.0846 – 0.0866 in.
	E	2 20 – 2.25 mm	0.0866 – 0.0886 in.

Specifications (Cont'd)

Output shaft snap ring thickness			
Clutch hub No 2	Mark		
	A	1.80 – 1.85 mm	0.0709 – 0 0728 in.
	B	1 85 – 1.90 mm	0.0728 – 0 0748 in.
	C	1 90 – 1.95 mm	0.0748 – 0 0768 in
	D	1.95 – 2.00 mm	0.0768 – 0.0787 in.
	E	2.00 – 2.05 mm	0 0787 – 0.0807 in.
	F	2.05 – 2 10 mm	0.0807 – 0.0827 in.
	G	2.10 – 2.15 mm	0.0827 – 0 0846 in.
Clutch hub No 1	Mark		
	A	2.30 – 2.35 mm	0.0906 – 0 0925 in.
	B	2.35 – 2 40 mm	0 0925 – 0.0945 in.
	C	2.40 – 2.45 mm	0 0945 – 0.0965 in
	D	2 45 – 2.50 mm	0.0965 – 0.0984 in.
	E	2.50 – 2.55 mm	0.0984 – 0.1004 in
	F	2 55 – 2.60 mm	0 1004 – 0.1024 in.
	G	2.60 – 2.65 mm	0 1024 – 0.1043 in
Rear	Mark		
	A	2.65 – 2 70 mm	0 1043 – 0.1063 in.
	B	2 70 – 2.75 mm	0.1063 – 0.1083 in.
	C	2.75 – 2.80 mm	0.1083 – 0 1102 in.
	D	2 80 – 2.85 mm	0 1102 – 0.1122 in.
	E	2 85 – 2.90 mm	0 1122 – 0.1142 in
	F	2.90 – 2 95 mm	0.1142 – 0.1161 in.
	G	2.95 – 3 00 mm	0 1161 – 0.1181 in
	H	3 00 – 3.05 mm	0.1181 – 0.1201 in
	J	3 05 – 3.10 mm	0.1201 – 0 1220 in.
	K	3.10 – 3.15 mm	0 1220 – 0.1240 in.
	L	3.15 – 3 20 mm	0.1240 – 0 1260 in
	M	3.20 – 3 25 mm	0.1260 – 0.1280 in.
	N	3.25 – 3.30 mm	0.1280 – 0.1299 in.
	P	3 30 – 3.35 mm	0.1299 – 0.1319 in
	Q	3 35 – 3.40 mm	0.1319 – 0 1339 in.
	R	3 40 – 3 45 mm	0 1339 – 0 1358 in
	S	3.45 – 3.50 mm	0.1358 – 0 1378 in.

Torque Specifications

Part tightened	kg-cm	ft-lb	N m
Reverse shift arm bracket	185	13	18
Rear bearing retainer × Intermediate plate	185	13	18
Counter gear rear lock nut	1,300	94	127
Shift fork × Shift fork shaft	200	14	20
Straight screw plug	190	14	19
Front bearing retainer × Transmission case	170	12	17
Transmission case × Transfer adaptor	380	27	37
Shift lever housing bolt	390	28	38
Clutch housing × Transmission case	370	27	36
Back-up light switch	450	33	44
Restrict pin	380	27	37
Shift lever retainer × Transfer adaptor	185	13	18

TRANSFER

Specifications

Rear output shaft			
High gear journal diameter	Limit	40.009 mm	1.5752 in
Low gear journal diameter	Limit	40 009 mm	1.5752 in
Runout		0 03 mm	0.0012 in
High and low gear oil clearance	STD	0.019 – 0 068 mm	0.0007 – 0.0027 in.
	Limit	0.068 mm	0.0027 in.
High and low gear thrust clearance	STD	0.10 – 0.25 mm	0.0039 – 0.0098 in.
	Limit	0.25 mm	0.0098 in.
Shift fork to hub sleeve clearance	Limit	1.0 mm	0.039 in.
Rear output shaft snap ring thickness	Mark		
	11	2.30 – 2 35 mm	0.0906 – 0 0925 in.
	17	2.60 – 2 65 mm	0 1024 – 0.1043 in.
Idler gear thrust clearance	STD	0 275 – 0.625 mm	0 0108 – 0.0246 in.
	Limit	0 625 mm	0.0246 in.
Rear output shaft preload	New bearing	15 – 24 7 kg-cm (13.0 – 21.4 in -lb, 1.5 – 2.4 N·m)	
	Reused bearing	7 – 12 kg-cm (6.1 – 10.4 in -lb, 0.7 – 1 2 N·m)	
Rear output shaft preload adjusting shim	Mark		
	0	0.15 mm	0.0059 in.
	4	0.4 mm	0.016 in
	5	0.5 mm	0.020 in.
	6	0 6 mm	0.024 in.
	7	0 7 mm	0.028 in
	8	0.8 mm	0 031 in.
	9	0 9 mm	0.035 in.
	10	1 0 mm	0 039 in.
	11	1.1 mm	0 043 in.
	12	1.2 mm	0.047 in
	13	1 3 mm	0 051 in
	14	1.4 mm	0.055 in.
	15	1 5 mm	0.059 in
Oil seal drive in depth			
Speedometer driven gear		20 mm	0 79 in

Torque Specifications

Part tightened		kg-cm	ft-lb	N·m
Transfer front case × Transmission case	17 mm	650	47	64
	14 mm	400	29	39
Transfer front case × Transfer rear case	17 mm	650	47	64
	14 mm	400	29	39
Idler gear shaft lock plate bolt		210	15	21
Front companion flange lock nut		1,300	94	127
Transfer rear case × Transfer case cover No 2		155	11	15
Transfer rear case × Rear output shaft rear bearing retainer		350	25	34
Rear companion flange lock nut		1,300	94	127
Transmission output shaft lock nut		1,300	94	127
Transfer rear case × Power take-off cover				
	With liquid sealer	170	12	17
	Others	195	14	19
Transfer indicator switch		450	33	44
Speedometer driven gear lock plate bolt		130	9	13
Diaphragm cylinder body × Transfer front case		185	13	18
Diaphragm cylinder cover × Diaphragm cylinder body		185	13	18
Diaphragm cylinder body cover × Diaphragm cylinder cover		75	65 in.-lb	7.4
Suction tube × Diaphragm cylinder body cover		375	27	37
Diaphragm push rod nut		375	27	37

PROPELLER SHAFT

Specifications

Propeller shaft runout		Limit	0 8 mm	0.031 in.
Spider bearing axial play			Less than 0.05 mm (0.0020 in)	
Snap ring thickness	Color	Mark		
Front propeller shaft	None	1	2 100 – 2.150 mm	0.0827 – 0.0846 in
	None	2	2.150 – 2 200 mm	0 0846 – 0.0866 in.
	None	3	2.200 – 2.250 mm	0.0866 – 0.0886 in.
	Brown	None	2.250 – 2.300 mm	0 0886 – 0.0906 in
	Blue	None	2.300 – 2.350 mm	0 0906 – 0 0925 in.
	None	6	2.350 – 2.400 mm	0.0925 – 0.0945 in.
	None	7	2.400 – 2.450 mm	0.0945 – 0 0965 in.
	None	8	2 450 – 2 500 mm	0.0965 – 0 0984 in
Rear propeller shaft	None		2 00 mm	0.0787 in.
	Brown		2.03 mm	0.0799 in.
	Blue		2.06 mm	0.0811 in
	None		2 09 mm	0 0823 in

Torque Specifications

Part tightened	kg-cm	ft-lb	N m
Front propeller shaft × Front differential	750	54	74
Front propeller shaft × Transfer	750	54	74
Rear propeller shaft × Rear differential	900	65	88
Rear propeller shaft × Transfer	900	65	88

SUSPENSION AND AXLE

Specifications

	Destination	Mode	Tire size	Front	Rear
Cold tire inflation pressure kg/cm² (psi, kPa)	Europe	HZJ70, 73 PZJ70, 73	215/80R16	1.8 (26, 180)	2.0 (29, 200)
			265/75R15	1 8 (26, 180)	2.0 (29, 200)
		PZJ75	7.50-16-8PRLT	2 4 (35, 240)	3 5 (51, 350)
			205R16C8PR	2.2 (32, 220)	4 5 (65, 450)
		LJ70, 73 RJ70, 73	7.00-16-6PRLT	1.8 (26, 180)	2.4 (35, 240)
			215/80R16	1.6 (23, 160)	2.0 (29, 200)
			265/75R15	1.8 (26, 180)	2.0 (29, 200)
		LJ77	215/80R16	1 8 (26, 180)	2 6 (38, 260)
			265/75R15	1 8 (26, 180)	2.0 (29, 200)
	Australia	FJ70, 73 HZJ70, 73 PZJ70, 73	7.50R16-6PRLT	2 0 (29, 200)	3 5 (51, 350)
			265/75R15	1 8 (26, 180)	2 0 (29, 200)
		FJ75, HZJ75	7.50R16-8PRLT	2 2 (32, 220)	3.9 (57, 390)
		LJ70 RJ70	205R16C6PR	1.7 (24, 170)	2.2 (32, 220)
			265/75R15	1.8 (26, 180)	2.0 (29, 200)
	Middle East	FJ70, 73	7.50-16-8PRLT	1.8 (26, 180)	2.0 (29, 200)
			7 50R16-8PRLT	2 0 (29, 200)	2 25 (33, 225)
			31 × 10.50R15-6PRLT	1.8 (26, 180)	2.5 (36, 250)
		FJ75 HZJ75	7.50-16-8PRLT	2.4 (35, 240)	4.25 (61, 425)
			7.50R16-8PRLT	2 25 (33, 225)	3 75 (54, 375)
		RJ77	205R16C 6PR	2 0 (29, 200)	3.2 (46, 320)
			31 × 10 50R15-6PRLT	1 9 (28, 190)	2.8 (41, 280)
		FJ75 HZJ75 PZJ75	9 00-15-6PRLT (Sand)	2.1 (30, 210)	2.8 (41, 280)
		FJ75, 73 PZJ70, 73	7.50R16-8PRLT 7 50R16C-8PR (Sahara)	2 1 (30, 210)	2 7 (39, 270)
		FJ75 HZJ75 PZJ75		2 1 (30, 210)	4.0 (58, 400)
	Others	FJ70, 73 PZJ70, 73	7.00-15-6PRLT	1 8 (26, 180)	2 6 (38, 260)
			7 00-16-6PRLT	1 8 (26, 180)	2 4 (35, 240)
			7.50-16-6PRLT	1 8 (26, 180)	2 0 (29, 200)
			7.50R16-8PRLT	2.0 (29, 200)	2 25 (33, 225)
			31 × 10.50R15-6PRLT	1.8 (26, 180)	2 5 (36, 250)
		FJ75 HZJ75 PZJ75	7 00-16-8PRLT	2.4 (35, 240)	3.5 (51, 350)
			7.50-16-6PRLT	1.8 (26, 180)	–
			7 50-16-8PRLT	–	3.5 (51, 350)
			7.50-16-8PRLT	2.4 (35, 240)	4 25 (62, 425)
			7.50R16-8PRLT	2 25 (32, 225)	3 75 (54, 375)
		LJ70, 72 RJ70	7.00-15-6PRLT	1 8 (26, 180)	2 2 (32, 220)
			7.00-16-6PRLT	1.8 (26, 180)	2.0 (29, 200)
			7 50-16-6PRLT	1.8 (26, 180)	1 8 (26, 180)
			205R16C 6PR	1 7 (25, 170)	2 0 (29, 200)
			31 × 10.50R15-6PRLT	1 8 (26, 180)	2.1 (32, 210)
		LJ77, 79 RJ77	7 00-16-6PRLT	2 1 (32, 210)	2.0 (29, 200)
			205R16C 6PR	2.0 (29, 200)	2.0 (29, 200)
			31 × 10 50R15-6PRLT	1.9 (28, 190)	2 8 (41, 280)
		FJ70, 73 PZJ70, 73	7 50R16-8PRLT 7.50R16C 8PR (Sahara)	2 1 (32, 210)	2.7 (41, 270)
		FJ75 HZJ75 PZJ75		2 1 (32, 210)	4.0 (60, 400)

Specifications (Cont'd)

Chassis ground clearance mm (in)	Tire size		Front	Rear
	7 00-15-6PRLT		471 (18 54)	473 (18.62)
	215/80R16		458 (18.03)	460 (18 11)
	205R16C 6RR		459 (18 07)	461 (18 15)
	265/75R15		476 (18.74)	478 (18.82)
	31 × 10.50R15-6PRLT		476 (18.74)	478 (18 82)
	7 00-16-6PRLT		483 (19.01)	485 (19.09)
	7.50-16-6PRLT		499 (19.66)	501 (19 72)
Front wheel alignment	Suspension type			
	Leaf spring type	Camber Left-right error	1°±45′ 30′ or less	
		Steering axis inclination Left-right error	9°30′±45′ 30′ or less	
		Caster (Left-right error)	Series	Angle
			Short, Middle Semi-long	1°15′±1° (30′ or less)
			Long (Van)	0°50′±1° (30′ or less)
			Long (Pickup)	0°30′±1° (30′ or less)
		Toe-in	Tire	Inspection STD / Adjustment STD
			Radial •31 × 10.50R15 -6PRLT •265/75R15	−1±2 mm (−0.04±0.08 in.) / −1±1 mm (−0 04±0 04 in.)
			Radial (•Others)	1±2 mm (0.04±0.08 in.) / 1±1 mm (0 04±0.04 in.)
			Bias	4±2 mm (0 16±0.08 in.) / 4±1 mm (0 16±0.04 in.)
		Wheel angle (Max)	Tire size	Inside wheel / Outside wheel
			7 50-16-8PRLT 7.50R16-8PRLT 9.00-16-6PRLT 7 50-16-6PRLT	30° +0° −3° / 28°
			Others	32° +0° −3° / 30°
		Side side (Reference only)		Less than 3.0 mm/m (0 118 in./3 3 ft)
	Coil spring type	Camber Left-right error	1°±1° 30′ or less	
		Steering axis inclination Left-right error	9°30′±1° 30′ or less	
		Caster Left-right error	4°05′±1° 30′ or less	
		Toe-in	Tire size	Inspection STD / Adjustment STD
			7.00-15-6PRLT 7 00-16-6PRLT 7.50-16-6PRLT	4±2 mm (0 16±0 08 in) / 4±1 mm (0 16±0 04 in)
			215/80R16 20516C 6PR	1±2 mm (0.04±0 08 in) / 1±1 mm (0.04±0.04 in)
			265/75R15 31 × 10.50R15 -6PRLT	−1±2 mm (−0 04±0.08 in.) / −1±1 mm (−0 04±0.04 in
		Wheel angle	Max.	Inside wheel / Outside wheel
				32°00′ +0° −3° / 30°00′
		Side slip (Reference only)		Less than 3.0 mm/m (0 118 in /3.3 ft)

Specifications (Cont'd)

Front suspension	Wheel lateral runout		1.2 mm	0.047 in	
	Free wheeling hub ring oil clearance		0 3 mm	0.012 in.	
	Power locking hub brush height				
	Standard height	A	6.5 mm	0 256 in.	
		B	4.7 mm	0 186 in.	
	Minimum height	A	4 2 mm	0.165 in.	
		B	3 1 mm	0.122 in.	
	Wheel bearing preload (rotating load at hub bolt)		2 8 – 5.7 kg	6.2 – 12.6 lb	27 – 56 N
	Steering knuckle bearing preload (rotating load at knuckle arm end, before installing dust seal)		3.0 – 6.0 kg	6.6 – 13.2 lb	29 – 59 N
	Steering knuckle preload adjusting shim thickness		0 1 mm	0 004 in.	
			0 2 mm	0.008 in.	
			0.3 mm	0.012 in	
			0.5 mm	0.020 in	
			1 0 mm	0.039 in.	
	Steering knuckle bearing preload (rotating load at knuckle arm end, after installing dust seal)		2 5 – 5.0 kg	5 6 – 11 0 lb	25 – 49 N
Front differential	Drive pinion bearing preload (at starting)				
	RJ and LJ series				
		New bearing	19 – 26 kg-cm	16 5 – 22.6 in.-lb	1 9 – 2 5 N m
		Reused bearing	9 – 13 kg-cm	7.8 – 11 3 in -lb	0.9 – 1 3 N·m
	FJ, PZJ and HZJ series				
		New bearing	10 – 16 kg-cm	8.7 – 13.9 in.-lb	1.0 – 1.6 N·m
		Reused bearing	5 – 8 kg-cm	4.3 – 6.9 in.-lb	0.5 – 0.8 N·m
	Total preload (at starting)		Add drive pinion bearing preload		
			4 – 6 kg-cm	3 5 – 5.2 in.-lb	0.4 – 0.6 N·m
	Drive pinion to ring gear backlash		0.13 – 0.18 mm	0.0051 – 0.0071 in.	
	Pinion gear to side gear backlash		0.05 – 0.20 mm	0.0020 – 0 0079 in.	
	Ring gear runout	Limit	0.10 mm	0 0039 in.	
	Companion flange deviation	Limit			
		Radial	0.10 mm	0.0039 in.	
		Lateral	0 10 mm	0.0039 in.	
	Side gear thrust washer thickness				
	2 pinion type		1 6 mm	0.063 in	
			1 7 mm	0.067 in.	
			1.8 mm	0 071 in	
	4 pinion type (include w/ Differential lock)		0.9 mm	0.035 in.	
			1 0 mm	0.039 in.	
			1.1 mm	0.043 in.	
			1 2 mm	0.047 in.	
			1.3 mm	0 051 in.	

Specifications (Cont'd)

Front differential (cont'd)	Drive pinion adjusting plate washer thickness	1.70 mm	0 0669 in.
		1.73 mm	0 0681 in.
		1 76 mm	0.0693 in
		1 79 mm	0.0705 in
		1.82 mm	0 0717 in.
		1.85 mm	0.0728 in
		1 88 mm	0.0740 in.
		1 91 mm	0.0752 in
		1 94 mm	0.0764 in
		1.97 mm	0 0776 in.
		2.00 mm	0 0787 in.
		2 03 mm	0.0799 in
		2.06 mm	0.0811 in.
		2 09 mm	0.0823 in
		2.12 mm	0.0835 in.
		2 15 mm	0 0846 in.
		2.18 mm	0.0858 in.
		2 21 mm	0.0870 in
		2 24 mm	0 0882 in.
		2.27 mm	0 0894 in.
		2 30 mm	0.0906 in.
		2.33 mm	0.0917 in.
	Rear oil seal drive in depth	1 0 mm	0.039 in
Rear suspension	Rear axle shaft Maximum runout	0.8 mm	0 031 in
	Hub axial play	Less than 0.1 mm (0.004 in.)	
	Wheel bearing preload (at starting)	0 4 – 3 3 kg	0 9 – 7.3 lb 4 – 32 N
	Axle housing and lock nut distance	–0.2 – 0.9 kg	–0 008 – 0.035 in.
Rear differential (8 in. type)	Drive pinion preload (at starting)		
	New bearing	10 – 16 kg-cm	8 7 – 13.9 in -lb 1 0 – 1.6 N·m
	Reused bearing	5 – 8 kg-cm	4 3 – 6.9 in.-lb 0 5 – 0 8 N·m
	Total preload (at starting)	Add drive pinion bearing preload	
		4 – 6 kg-cm	3.5 – 5.2 in.-lb 0 4 – 0.6 N m
	Drive pinion to ring gear backlash	0 13 – 0 18 mm	0 0051 – 0.0071 in
	Pinion gear to side gear backlash	0.05 – 0 20 mm	0 0020 – 0 0079 in
	Ring gear runout Limit	0 10 mm	0.0039 in
	Companion flange deviation Limit		
	Radial	0.10 mm	0 0039 in
	Leteral	0.10 mm	0 0039 in
	Side gear thrust washer thickness		
	4 pinion type (include w/ Differential lock)	0 9 mm	0.035 in
		1 0 mm	0 039 in.
		1.1 mm	0 043 in.
		1.2 mm	0 047 in
		1 3 mm	0 051 in
	LSD type Mark		
	A	0 15 mm	0.0059 in
	B	0 20 mm	0 0079 in.
	C	0.25 mm	0.0098 in.
	D	0 30 mm	0 0118 in
	E	0 35 mm	0 0138 in

Specifications (Cont'd)

Rear differential (8 in. type) (cont'd)	Drive pinion adjusting plate washer thickness	1.70 mm	0.0669 in.
		1.73 mm	0.0681 in.
		1.76 mm	0.0693 in.
		1.79 mm	0.0705 in.
		1.82 mm	0.0717 in.
		1.85 mm	0.0728 in.
		1.88 mm	0.0740 in.
		1.91 mm	0.0752 in.
		1.94 mm	0.0764 in.
		1.97 mm	0.0776 in.
		2.00 mm	0.0787 in.
		2.03 mm	0.0799 in.
		2.06 mm	0.0811 in.
		2.09 mm	0.0823 in.
		2.12 mm	0.0835 in.
		2.15 mm	0.0846 in.
		2.18 mm	0.0858 in.
		2.21 mm	0.0870 in.
		2.24 mm	0.0882 in.
		2.27 mm	0.0894 in.
		2.30 mm	0.0906 in.
		2.33 mm	0.0917 in.
	Front oil seal drive in depth	1.0 mm	0.039 in.
Rear differential (9.5 in. type)	Drive pinion bearing preload (at starting)		
	New bearing	13 – 20 kg-cm	11.3 – 17.4 in.-lb 1.3 – 2.0 N·m
	Reused bearing	7 – 10 kg-cm	6.1 – 8.7 in.-lb 0.7 – 1.0 N·m
	Total preload (at starting)	Add drive pinion bearing preload	
	2 pinion and LSD types	4 – 6 kg-cm	3.5 – 5.2 in.-lb 0.4 – 0.6 N·m
	w/ Differential lock	3 – 7 kg-cm	2.6 – 6.1 in.-lb 0.3 – 0.7 N·m
	Drive pinion to ring gear backlash	0.15 – 0.20 mm	0.0059 – 0.0079 in.
	Pinion gear to side gear backlash		
	Ex. LSD type	0.02 – 0.20 mm	0.0008 – 0.0079 in.
	LSD type	0.02 – 0.24 mm	0.0008 – 0.0094 in.
	Ring gear runout Limit	0.10 mm	0.0039 in.
	Companion flange deviation Limit		
	Radial	0.10 mm	0.0039 in.
	Leteral	0.10 mm	0.0039 in.
	Side gear thrust washer thickness		
	Ex. LSD type	1.60 mm	0.0630 in.
		1.75 mm	0.0689 in.
		1.90 mm	0.0748 in.
		2.05 mm	0.0807 in.
	LSD type	0.20 mm	0.0079 in.
		0.25 mm	0.0098 in.
		0.30 mm	0.0118 in.
		0.35 mm	0.0138 in.
	Drive pinion adjusting plate washer thickness	1.05 mm	0.0413 in.
		1.05 mm	0.0413 in.
		1.10 mm	0.0433 in.
		1.15 mm	0.0453 in.
		1.20 mm	0.0472 in.
		1.25 mm	0.0492 in.
		1.30 mm	0.0512 in.
		1.35 mm	0.0531 in.
		1.40 mm	0.0551 in.
		1.45 mm	0.0571 in.
		1.50 mm	0.0591 in.
		1.55 mm	0.0610 in.

Specifications (Cont'd)

Rear differential (9.5 in. type) (cont'd)	Side bearing adjusting plate thickness (w/ Differential lock only)	2.67 mm	0.1051 in.
		2.70 mm	0.1063 in.
		2.73 mm	0.1075 in.
		2.76 mm	0.1087 in.
		2.79 mm	0.1098 in.
		2.82 mm	0.1110 in.
		2.85 mm	0.1122 in.
		2.88 mm	0.1134 in.
		2.91 mm	0.1146 in.
		2.94 mm	0.1157 in.
		2.97 mm	0.1169 in.
		3.00 mm	0.1181 in.
		3.03 mm	0.1193 in.
		3.06 mm	0.1205 in.
		3.09 mm	0.1217 in.
		3.12 mm	0.1228 in.
		3.15 mm	0.1240 in.
		3.18 mm	0.1252 in.
		3.21 mm	0.1264 in.
		3.24 mm	0.1276 in.
		3.27 mm	0.1287 in.
		3.30 mm	0.1299 in.
		3.33 mm	0.1311 in.
	Front oil seal drive in depth	1.0 mm	0.039 in.

Torque Specifications

	Part tightened	kg-cm	ft-lb	N·m
Front axle and suspension	Free wheeling hub body × Axle hub	315	23	31
	Free wheeling hub body × Free wheeling hub cover	100	7	10
	Electrical locking hub body sub-assembly × Axle hub	315	23	31
	Electrical locking hub cover sub-assembly × Electrical locking hub body sub-assembly	315	23	31
	Electrical locking hub slip ring mounting nut	75	65 in.-lb	7.4
	Axle hub × Flange	315	23	31
	Hub bearing lock nut	650	47	64
	Axle carrier × Disc brake cylinder (w/ Disc brake)	1,250	90	123
	Disc brake cylinder (w/ Disc brake) × Brake tube	155	11	15
	Axle carrier × Dust seal	475	34	47
	Knuckle arm × Tie rod end	925	67	91
	Steering knuckle × Knuckle arm	980	71	96
	Steering knuckle × Bearing cap	980	71	96
	Steering knuckle × Third arm	980	71	96
	Steering knuckle × Oil seal retainer	55	48 in.-lb	5.4
	(Leaf Spring Type)			
	Shock absorber × Frame	320	23	31
	Shock absorber × Axle housing	650	47	64
	Spring bumper × Frame	290	21	28
	Rear spring bracket × Frame	1,250	90	123
	Front spring shackle × Leaf spring	925	67	91
	Spring U bolt × Spring seat	1,450	105	142
	Leaf spring center bolt	360	26	35
	Hanger pin × Frame	240	17	24
	Stabilizer bar bracket × Axle housing	120	9	12
	Stabilizer bar × Frame	250	17	24

Torque Specifications (Cont'd)

	Part tightened	kg-cm	ft-lb	N·m
Front axle and suspension (cont'd)	**(Coil Spring Type)**			
	Shock absorber × Frame	1,800	130	177
	Shock absorber × Axle housing	320	23	31
	Lateral control rod × Axle housing	1,460	106	143
	Lateral control rod × Frame	1,000	72	98
	Leading arm × Axle housing	1,750	127	171
	Leading arm × Frame	1,750	127	171
	Stabilizer link × Frame	1,150	83	113
	Stabilizer link × Stabilizer bar bracket	185	13	18
	Stabilizer bar bracket × Axle housing	185	13	18
Rear axle and suspension	**(Semi-Floting Type)**			
	Differential cover × Axle housing	130	9	13
	Differential cover × LSPV shackle brackt	195	14	19
	Differential cover × Parking brake cable clamp	130	9	13
	Pinion shaft pin	275	20	27
	Drain plug	500	36	49
	Axle carrier × Disc brake cylinder (w/ Disc brake)	900	65	88
	(Full-Floating Type)			
	Axle housing × Backing plate	1,250	90	123
	Bearing lock nut	600	43	59
	Axle hub × Axle shaft	175	13	17
	Disc brake cylinder (w/ Disc brake) × Axle carrier	900	65	88
	(Leaf Sping Type)			
	Shock absorber × Frame	650	47	64
	Shock absorber × Axle housing	375	27	37
	Spring bumper × Frame	290	21	28
	Front spring bracket × Hanger pin	1,250	90	123
	Front spring shackle × Leaf spring	925	67	91
	Hanger pin × Frame	240	17	24
	Spring U bolt × Spring seat	1,450	105	142
	Leaf spring center bolt	500	36	49
	(Coil Spring Type)			
	Shock absorber × Frame	650	47	64
	Shock absorber × Axle housing	320	23	31
	Lateral control rod × Frame	1,460	106	143
	Lateral control rod × Axle housing	1,000	72	98
	Trailing arm × Frame	2,500	181	245
	Trailing arm × Axle housing	2,500	181	245
Differential (8 in. type)	Propeller shaft × Companion flange	750	54	74
	Drive pinion × Companion flange	2,000 – 3,500	145 – 253	196 – 343
	Ring gear × Differential case	985	71	97
	Side bearing cap × Differential carrier	800	58	78
	Differential carrier × Axle housing	250	18	25
	Differential LH case × RH case	480	35	47
	Differential lock shaft retainer	240	17	24
	Differential lock straight screw plug	220	16	22
	Differential lock indicator switch	410	30	40
	Differential lock actuator	270	20	26

Torque Specifications (Cont'd)

	Part tightened	kg-cm	ft-lb	N m
Differential (9 5 in. type)	Propeller shaft × Companion flange	900	65	88
	Drive pinion × Companion flange	2,500 – 4,500	181 – 325	245 – 441
	Ring gear × Differential case	1,125	81	110
	Side bearing cap × Differential carrier			
	(2 pinion and LSD types)	800	58	78
	(w/ Differential lock)	1,150	83	113
	Differential carrier × Axle housing	475	34	47
	Differential LH case × RH case	480	35	47
	Pinion shaft pin (2 pinion type)	275	18	25
	Differential case × Case cover	590	43	58
	Differential lock shift fork set bolt	200	14	20
	Differential lock actuator	240	17	24
	Differential lock cover	185	13	18
	Differential lock indicator switch	410	30	40

BRAKE SYSTEM

Specifications

Brake pedal	Pedal height (from asphalt sheet)	161 – 171 mm	6.34 – 6.73 in.
	Pedal freeplay	3 – 6 mm	0 12 – 0 24 in.
	Pedal reserve distance at 50 kg (110 2 lb, 490 N)		
	Front disc type	More than 68 mm (2.68 in.)	
	Front drum type		
	• Heavy-duty		
	70, 73 series	More than 100 mm (3 94 in.)	
	75 series	More than 90 mm (3 54 in.)	
	• Light-duty	More than 105 mm (4.13 in)	
Brake booster	Booster push rod to piston clearance		
	at Idling vacuum	0.1 – 0.5 mm	0 004 – 0.020 in.
	w/ SST	0 mm	0 in.
Vacuum pump	Blade Height	16 50 mm	0 6496 in.
	Width	4.95 mm	0 1949 in.
	Lengh	44 96 mm	1.7701 in.
	Rotation play	1 0 mm	0.039 in.
Front brake (Drum)	Drum inside diameter		
	• Heavy-duty STD	295 0 mm	11.614 in
	Limit	297 0 mm	11.693 in
	• Light-duty STD	279 4 mm	11.000 in.
	Limit	281 4 mm	11.079 in.
Front brake (Dsic)	Pad thickness STD	9 5 mm	0.374 in.
	Limit (Australia)	4 0 mm	0.157 in.
	(Ex. Australia)	1 0 mm	0.039 in.
	Disk thickness		
	• Light-duty rear drum		
	STD	12 5 mm	0.492 in
	Limit	11.5 mm	0 453 in.
	• Ex above model STD	20.0 mm	0.787 in.
	Limit	18.0 mm	0.709 in
	Disc runout Limit	0.15 mm	0.0059 in.
Rear brake (Drum)	Drum inside diameter		
	• Heavy-Duty STD	295.0 mm	11.614 in.
	Limit	297.0 mm	11 693 in.
	• Light-Duty STD	254.0 mm	10.000 in.
	Limit	256.0 mm	10 079 in.
	Lining thickness		
	• Heavy-duty STD	6.5 mm	0 256 in
	Limit	1.5 mm	0.059 in
	• Light-duty STD	5.0 mm	0.197 in.
	Limit	1.0 mm	0.039 in
Rear brake (Disc)	Pad thickness STD	10 0 mm	0.394 in
	Limit	1.0 mm	0 039 in.
	Disc thickness STD	18 0 mm	0 710 in
	Limit	16 0 mm	0 630 in
	Disc runout Limit	0.15 mm	0 0059 in.
Parking brake	Rear disc inner diameter STD	210 mm	8.27 in
	Limit	211 mm	8.31 in
	Lining thickness STD	4.0 mm	0.157 in.
	Limit	1 0 mm	0.039 in.
	Lever travel at 20 kg (44.1 lb, 196 N)	7 – 9 clicks	
	Clearance between rear shoe and lever	Less than 0 35 mm (0 0138 in.)	
	Adjusting shim thickness	0.3 mm	0.012 in
		0.6 mm	0.024 in
		0.9 mm	0 035 in.

Torque Specifications

Part tightened	kg-cm	ft-lb	N·m
Bleeder plug	110	8	11
Piston stopper bolt × Master cylinder	100	7	10
Outlet plug × Master cylinder	450	33	44
Reservoir set bolt × Master cylinder	250	18	25
Master cylinder × Brake booster	130	9	13
Brake tube union nut	155	11	15
Brake booster × Pedal bracket	130	9	13
Brake booster clevis lock nut	375	27	37
Vacuum pump × Check valve	750	54	74
Vacuum pump × Engine	400	29	39
Vacuum pump end cover × Casing	80	69 in.-lb	7.8
Vacuum pump gear × Rotor shaft	1,125	81	110
Vacuum pump union bolt	140	10	14
Backing plate × Steering knuckle	1,100	80	108
Wheel cylinder × Backing plate	185	13	18
Wheel cylinder × Brake tube	155	11	15
Brake drum × Axle hub	70	61 in -lb	6 9
Front brake wheel cylinder × Backing plate	185	13	18
Front brake tube clamp	80	69 in.-lb	7 8
Front disc × Front axle hub	475	34	47
Front disc brake cylinder × Steering knuckle	1,250	90	123
Drum brake backing plate × Rear axle housing	1,250	90	123
Parking brake bellcrank bracket × Backing plate	130	9	13
Rear brake wheel cylinder × Backing plate	100	7	10
Rear disc brake torque plate × Axle carrier	475	34	47
Rear disc brake cylinder installation bolt	255	18	25
LSP & BV bracket × Frame	195	14	19
LSP & BV × LSP & BV bracket	130	9	13
LSP & BV spring × LSP & BV bracket	185	13	18
LSP & BV spring × Shackle No.1	185	13	18
LSP & BV shackle lock nut	250	18	25
LSP & BV shackle × Shackle bracket	130	9	13
LSP & BV shackle bracket × Rear axle housing	195	14	19

STEERING

Specifications

Steering column	Steering wheel freeplay		40 mm (1.57 in.) or less		
	Collar No.1 outer diameter		17.989 – 17.996 mm	0.7082 – 0.7085 in.	
			17.996 – 18.003 mm	0.7085 – 0.7088 in.	
			18.003 – 18.010 mm	0.7088 – 0.7091 in.	
			18.010 – 18.017 mm	0.7091 – 0.7093 in.	
			18.017 – 18.024 mm	0.7093 – 0.7096 in.	
	Collar No.2 outer diameter		17.982 – 18.000 mm	0.7080 – 0.7087 in.	
			18.000 – 18.018 mm	0.7087 – 0.7094 in.	
	Tilt steering support shim thickness	Mark			
		None	0.197 – 0.203 mm	0.0078 – 0.0080 in.	
		5	0.495 – 0.505 mm	0.0195 – 0.0199 in.	
		8	0.795 – 0.805 mm	0.0313 – 0.0317 in.	
		14	1.395 – 1.405 mm	0.0549 – 0.0553 in.	
		18	1.795 – 1.805 mm	0.0707 – 0.0711 in.	
Manual gear housing	Sector shaft thrust washer thickness		1.95 mm	0.0768 in.	
			2.00 mm	0.0787 in.	
			2.05 mm	0.0807 in.	
	Sector shaft end cover bushing inside diameter	No.1	36.055 – 36.065 mm	1.4195 – 1.4199 in.	
		2	36.045 – 36.055 mm	1.4191 – 1.4195 in.	
		3	36.035 – 36.045 mm	1.4187 – 1.4191 in.	
		4	36.025 – 36.035 mm	1.4183 – 1.4187 in.	
	Worm shaft preload	at starting	3.5 – 5 kg-cm	3.0 – 4.3 in.-lb	0.34 – 0.49 N·m
	Total preload	at starting	8 – 11 kg-cm	6.9 – 9.5 in.-lb	0.78 – 1.08 N·m
Power steering	Drive belt tension	at 10 kg (22.0 lb, 98 N)			
		FJ series New belt	7 – 9.5 mm	0.28 – 0.37 in.	
		Used belt	8 – 10 mm	0.32 – 0.39 in.	
		LJ series New belt	8 – 12 mm	0.32 – 0.47 in.	
		Used belt	10 – 15 mm	0.39 – 0.59 in.	
		RJ series New belt	6 – 10 mm	0.24 – 0.39 in.	
		Used belt	7 – 11 mm	0.28 – 0.43 in.	
	Drive belt tension	w/ SST New belt	45 – 55 kg		
		Used belt	20 – 35 kg		
	Maximum rise of oil level		5 mm	0.20 in.	
	Oil pressure at idle speed	Minimum			
		FJ series	80 kg/cm^2	1,138 psi	7,855 kPa
		HZJ and PZJ series	85 kg/cm^2	1,209 psi	8,336 kPa
		LJ and RJ series	75 kg/cm^2	1,067 psi	7,355 kPa
	Steering effort	Maximum	4 kg	8.8 lb	39 N
	Rotor shaft bushing oil clearance	STD	0.01 – 0.03 mm	0.0004 – 0.0012 in.	
		Maximum	0.07 mm	0.0028 in.	
	Vane plate to rotor groove clearance				
		FJ series Maximum	0.028 mm	0.0011 in.	
		LJ, RJ series Maximum	0.06 mm	0.0024 in.	
	Vane plate				
	FJ series	Minimum height	8.1 mm	0.319 in.	
		Minimum thickness	1.797 mm	0.0707 in.	
		Minimum length	14.988 mm	0.5901 in.	
	LJ, RJ series	Minimum height	7.8 mm	0.307 in.	
		Minimum thickness	1.7 mm	0.067 in.	
		Minimum length	14.97 mm	0.5894 in.	

Specifications (Cont'd)

Power steering (cont'd)	Vane plate length			
	Rotor and cam ring Mark			
		None	14 996 – 14 998 mm	0 5904 – 0 5905 in
		1	14 994 – 14 996 mm	0.5903 – 0 5904 in.
		2	14.992 – 14.994 mm	0 5902 – 0.5903 in
		3	14 990 – 14 992 mm	0 59016 – 0.59024 in.
		4	14.988 – 14.990 mm	0 5901 – 0.5902 in.
	Flow control valve spring length			
		FJ series	35 – 37 mm	1 38 – 1.46 in
		HZJ and PZJ series	50 – 55 mm	1.97 – 2.17 in
		LJ and RJ series	47 – 50 mm	1 85 – 1.97 in.
	Pump rotating torque		2 8 kg-cm (2 4 in -lb, 0.3 N·m) or less	
	Steering rack runout	Maximum	0.15 mm	0.006 in
	Cross shaft adjusting screw thrust clearance		0 03 – 0.05 mm	0 0012 – 0.0020 in
	Worm gear preload	at starting	3 – 5 5 kg-cm	2 6 – 4.8 in -lb 0.3 – 0.5 N m
	Total preload	at starting	7 5 – 11 kg-cm	6 5 – 9.6 in -lb 0 74 – 9.6 N·m

Torque Specifications

Steering column	Part tightened	kg-cm	ft-lb	N m
	Upper bracket × Column tube	75	65 in -lb	7 4
	Column hole cover × Body	130	9	13
	Column tube × Body	250	18	25
	Steering wheel × Main shaft	350	25	34
	Main shaft × Intermediate shaft	360	26	35
	Intermediate shaft × Worm shaft	360	26	35
	Pawl set bolt	185	13	18
	Tilt lever retainer	185	13	18
	Tilt steering support × Breakaway bracket	185	13	18
	Tilt steering support stopper bolt	100	7	10
	Tilt steering support × Upper bracket	75	65 in -lb	7 4
	Breakaway bracket × Column Tube	185	13	18
	Column hole cover × Column tube	185	13	18
	Main shaft × Intermediate shaft	250	18	25
	Breakaway bracket × Body	250	18	25
	Intermediate shaft No 1 × No 2	360	26	35
Manual gear housing	Universal joint	360	26	35
	Gear housing × Body	1,450	105	142
	Pitman arm × Gear housing	1,800	130	177
	Sector shaft adjusting screw lock nut	450	33	44
	Sector shaft end cover	1,150	83	113
	Bleeder plug	200	14	20
	Worm shaft adjusting screw lock nut	1,110	80	109

Torque Specifications (Cont'd)

	Part tightened		kg-cm	ft-lb	N m
Power steering (PS pump)	**FJ series**				
	Pressure tube		370	27	36
	PS pump × Bracket		450	33	44
	PS pump × Adjusting stay		375	27	37
	Adjusting stay × Bracket		375	27	37
	Pulley set nut		450	33	44
	Reservoir set bolt	12 mm bolt	130	9	13
		14 mm bolt	420	30	41
	Pressure port union		700	51	69
	HZJ and PZJ series				
	Union bolt		450	33	44
	PS pump × Body		400	29	39
	Return tube		80	69 in.-lb	7.8
	Front housing × Rear housing		375	27	37
	Drive gear lock nut		700	51	69
	Valve lock screw		650	47	64
	LJ and RJ series				
	Union bolt		450	33	44
	PS pump × Bracket		450	33	44
	Pulley set nut		450	33	44
	Pressure port union		700	51	69
	Suction port union		130	9	13
	Front housing × Rear housing		470	34	46
Power steering (Gear housing)	Pressure and return tube		450	33	44
	Universal joint		360	26	35
	Gear housing × Body		1,450	105	142
	Gear housing × Pitman arm		1,800	130	177
	Cross shaft adjusting screw set nut		470	34	46
	Cross shaft end cover lock bolt		470	34	46
	Worm gear valve body set bolt		470	34	46
	Plunger guide nut		205	15	20
Steering linkage	Pitman arm × Relay rod (Heavy-duty)		925	67	91
	Relay rod × Steering damper (Light-duty)		750	54	74
	Tie rod × Steering damper		750	54	74
	Steering damper × Damper hinge (Heavy-duty)		750	54	74
	Damper hinge × Body (Light-duty)		400	29	39
	Damper hinge × Body (Heavy-duty)		195	14	19
	Relay rod × Tie rod (Light-duty)		925	67	91
	Relay rod × Knuckle arm		925	67	91
	Tie rod × Knuckle arm		925	67	91
	Tie or relay rod clamp		450	33	44

BODY

Torque Specifications

Part tightened		kg-cm	ft-lb	N·m
FRP Top				
FRP top set bolt	6 mm	80	69 in.-lb	7.8
	8 mm	120	9	12
Roll Bar				
Roll bar set bolt		440	32	43
Front Seat				
(70, 73, 75 series)				
Reclining seat adjuster × Seat back		530	38	52
Reclining seat adjuster × Seat cushion		530	38	52
Seat back × Seat cushion		195	14	19
Seat cushion × Seat track		260	19	25
Seat track × Body	w/o Seat suspension	400	29	39
Seat track × Seat suspension	w/ Seat suspension	400	29	39
Rear Bench Seat				
(70, 73, 75 series)				
Seat cushion lock × Seat leg	w/o Seat belt	260	19	25
	w/ Seat belt	420	30	41
Striker × Body		530	38	52
Seat cushion bracket × Seat cushion		530	38	52
Seat cushion bracket × Body		260	19	25
Seat back lock × Seat back		530	38	52
Seat back lock × Seat cushion		530	38	52
Strap set bolt		80	69 in.-lb	7.8
Rear Parallel Seat				
(70, 73, 75V series)				
Seat frame × Body		260	19	25
(75P series)				
Seat frame × Body		195	14	19
Seat Belt				
Seat belt anchor × Body		440	32	43
Fuel Tank and Line				
(70, 73, 75 series)				
Fuel sender gauge set screw		15	13 in.-lb	1.5
Fuel tank suction tube set screw		15	13 in.-lb	1.5
Fuel tank front bracket × Body		400	29	39
Fuel tank front bracket × Fuel tank band (70, 73 series)		400	29	39
Fuel tank rear bracket × Fuel tank band (75 series)		400	29	39
Fuel tank band × Fuel tank stay (75 series sub tank)		400	29	39
Fuel tank rear bracket × Body		400	29	39
Drain plug		65	56 in.-lb	6.4

LUBRICANT

Item		Capacity			Classification
		Liters	Us qts	Imp qts	
Manual transmission oil	G40	2.8	3 0	2 5	API GL-4 or GL-5
	G52	2.6	2 8	2.3	SAE 75W-90
	H41	3 5	3.7	3 1	
	H55F	4.9	5 2	4 3	
	R141F	3 2	3 4	2.8	
	R150F	3.0	3 2	2 6	
	R151F	3 0	3.2	2.6	
Automatic transmission fluid					ATF DEXRON® II
Dry fill					
w/o Oil cooler		15.0	15.9	13.2	
w/ Oil cooler		15.4	16.3	13.6	
Drain and refill		6.0	6.3	5.3	
Transfer oil	G40, G52	2.1	2 2	1.8	API GL-4 or GL-5, SAE90
	H41, H55F	2.2	2.3	1 9	
	R140F, R150F, R151F	2.2	2.3	1 9	
Differential oil					
Front					API GL-5
RJ and LJ series		1 9	2.1	1 7	Above −18°C (0°F) SAE90
FJ, PZJ and HZJ series		2 6	2.7	2.3	Below −18°C (0°F) SAE 80W or 80W-90
Rear (w/o LSD)					API GL-5
RJ and LJ series		1 85	2.0	1.6	Above −18°C (0°F) SAE90
FJ, PZJ and HZJ series		2.5	2 6	2.2	Below −18°C (0°F) SAE80W or 80W-90
Rear (w/ LSD)					API GL-5 for LSD
RJ and LJ series		1.85	2.0	1.6	Above −18°C (0°F) SAE90
FJ, PZJ and HZJ series		2.5	2.6	2.2	Below −18°C (0°F) SAE 80W or 80W-90
Power steering fluid					ATF DEXRON® II
Gear box		0 51	0.54	0.45	
Total		0.8	0.85	0 70	
Steering gear box oil		0.64	0 68	0 56	API GL-4, SAE90
Brake fluid		–			SAE J1703 or FMVSS No.116 DOT3

STANDARD BOLT TORQUE SPECIFICATIONS

HOW TO DETERMINE BOLT STRENGTH

	Mark	Class
Hexagon head bolt	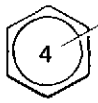 Bolt head No. 4— 5— 6— 7— 8— 9— 10— 11—	4T 5T 6T 7T 8T 9T 10T 11T
	No mark	4T
Hexagon flange bolt w/ washer hexagon bolt	No mark	4T
Hexagon head bolt	Two protruding lines	5T
Hexagon flange bolt w/ washer hexagon bolt	Two protruding lines	6T
Hexagon head bolt	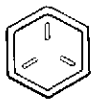 Three protruding lines	7T
Hexagon head bolt	Four protruding lines	8T

	Mark	Class
Stud bolt	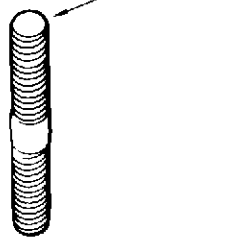 No mark	4T
	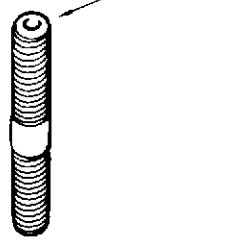 Grooved	6T
Welded bolt	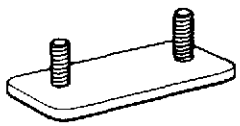	4T

SPECIFIED TORQUE FOR STANDARD BOLTS

Class	Diameter mm	Pitch mm	Specified torque					
			Hexagon head bolt			Hexagon flange bolt		
			kg-cm	ft-lb	N·m	kg-cm	ft-lb	N·m
4T	6	1	55	48 in.-lb	5	60	52 in.-lb	6
	8	1 25	130	9	12 5	145	10	14
	10	1 25	260	19	26	290	21	29
	12	1 25	480	35	47	540	39	53
	14	1 5	760	55	74	850	61	84
	16	1.5	1,150	83	115	—	—	—
5T	6	1	65	56 in -lb	6.5	75	65 in.-lb	7.5
	8	1.25	160	12	15.5	175	13	17.5
	10	1.25	330	24	32	360	26	36
	12	1.25	600	43	59	670	48	65
	14	1 5	930	67	91	1,050	76	100
	16	1.5	1,400	101	140	—	—	—
6T	6	1	80	69 in.-lb	8	90	78 in -lb	9
	8	1 25	195	14	19	210	15	21
	10	1.25	400	29	39	440	32	44
	12	1 25	730	53	71	810	59	80
	14	1.5	1,100	80	110	1,250	90	125
	16	1.5	1,750	127	170	—	—	—
7T	6	1	110	8	10.5	120	9	12
	8	1 25	260	19	25	290	21	28
	10	1 25	530	38	52	590	43	58
	12	1 25	970	70	95	1,050	76	105
	14	1 5	1,500	108	145	1,700	123	165
	16	1 5	2,300	166	230	—	—	—
8T	8	1.25	300	22	29	330	24	33
	10	1.25	620	45	61	690	50	68
	12	1.25	1,100	80	110	1,250	90	120
9T	8	1.25	340	25	34	380	27	37
	10	1 25	710	51	70	790	57	78
	12	1 25	1,300	94	125	1,450	105	140
10T	8	1 25	390	28	38	430	31	42
	10	1.25	800	58	78	890	64	88
	12	1.25	1,450	105	140	1,600	116	155
11T	8	1 25	430	31	42	480	35	47
	10	1.25	890	64	87	990	72	97
	12	1 25	1,600	116	155	1,800	130	175

CLUTCH

	Page
TROUBLESHOOTING	CL-2
CHECK AND ADJUSTMENT OF CLUTCH PEDAL	CL-3
OPERATIONAL TEST OF CLUTCH BOOSTER	CL-4
BLEEDING OF CLUTCH SYSTEM	CL-5
CLUTCH MASTER CYLINDER	CL-6
CLUTCH BOOSTER	CL-10
CLUTCH ACCUMULATOR	CL-17
CLUTCH RELEASE CYLINDER	CL-21
CLUTCH UNIT	CL-22

TROUBLESHOOTING

Problem	Possible cause	Remedy	Page
Hard to shift or will not shift	Clutch pedal freeplay excessive	Adjust pedal freeplay	CL-3
	Clutch booster faulty	Inspect clutch booster	CL-10
	Clutch release cylinder faulty	Repair release cylinder	CL-21
	Clutch master cylinder faulty	Repair master cylinder	CL-6, 8
	Clutch disc out of true, lining greasy or broken	Inspect clutch disc	CL-22
	Splines on input shaft or clutch disc dirty or burred	Repair as necessary	CL-22
	Clutch pressure plate faulty	Replace pressure plate	CL-22
Transmission jumps out of gear	Pilot bearing worn	Replace pilot bearing	CL-22
Clutch slips	Clutch pedal freeplay insufficient	Adjust pedal freeplay	CL-3
	Clutch booster faulty	Inspect clutch booster	CL-10
	Clutch disc lining oily or worn out	Inspect clutch disc	CL-22
	Pressure plate faulty	Replace pressure plate	CL-22
	Release fork binds	Inspect release fork	CL-22
Clutch grabs/chatters	Clutch booster faulty	Inspect clutch booster	CL-10
	Clutch disc lining oily or worn out	Inspect clutch disc	CL-22
	Pressure plate faulty	Replace pressure plate	CL-22
	Clutch diaphragm spring bending	Align clutch diaphragm	CL-22
	Engine mounts loose	Repair as necessary	
Clutch pedal spongy	Air in clutch lines	Bleed clutch system	CL-5
	Clutch release cylinder faulty	Repair release cylinder	CL-21
	Clutch master cylinder faulty	Repair master cylinder	CL-6, 8
Clutch noisy	Loose part inside housing	Repair as necessary	
	Release bearing worn or dirty	Replace release bearing	CL-22
	Pilot bearing worn	Replace pilot bearing	CL-22
	Release fork or linkage sticks	Repair as necessary	

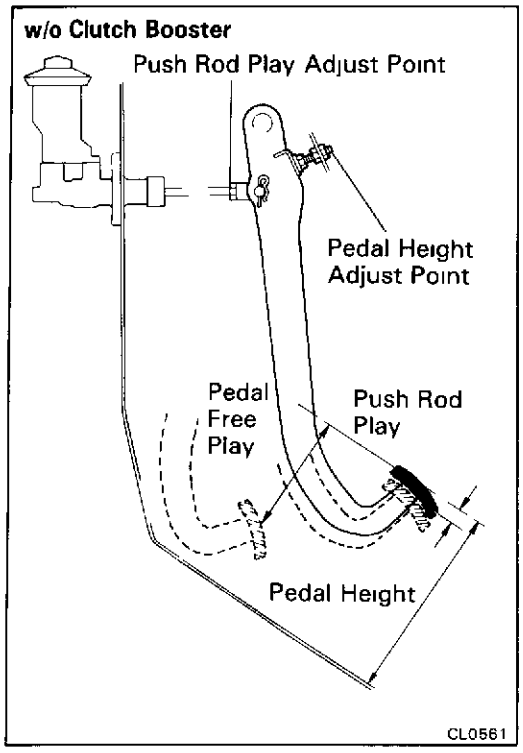

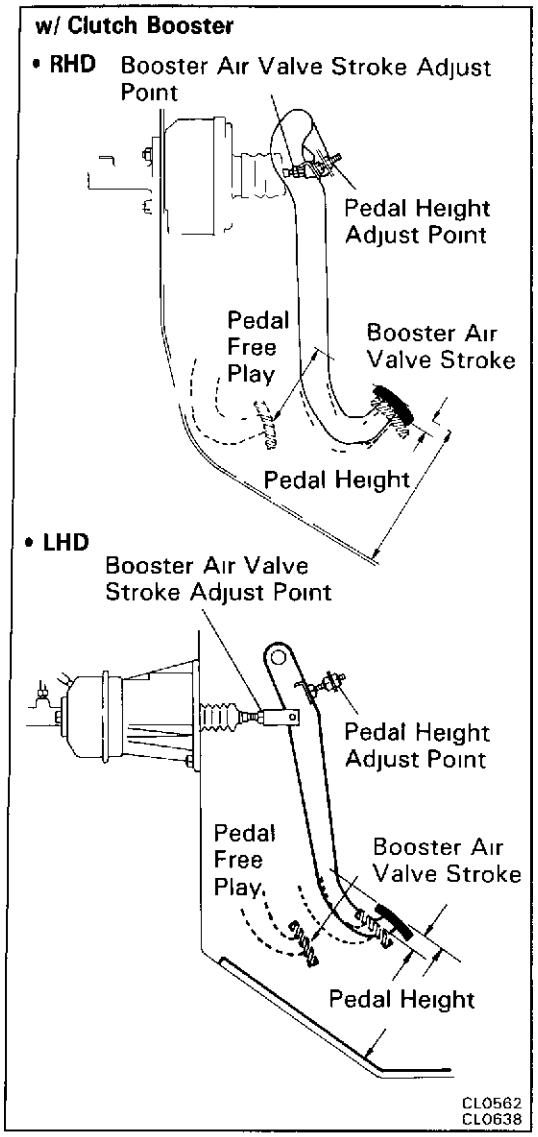

CHECK AND ADJUSTMENT OF CLUTCH PEDAL

1. CHECK THAT PEDAL HEIGHT IS CORRECT

Pedal height from dash panel: 181 mm (7.13 in.)

2. IF NECESSARY, ADJUST PEDAL HEIGHT

Loosen the lock nut and turn the stopper bolt until the height is correct. Tighten the lock nut.

HINT: After adjusting the pedal height, check and adjust the pedal free play and push rod play or booster air valve stroke.

3-1. (w/o Clutch Booster)
CHECK THAT PEDAL FREEPLAY AND PUSH ROD PLAY ARE CORRECT

(Pedal Freeplay)

Push in on the pedal until the beginning of clutch resistance is felt.

Pedal freeplay: 13.0 — 23.0 mm (0.51 — 0.91 in.)

(Push rod play)

Push in on the pedal with a finger softly until the resistance begins to increase a little.

Push rod play at pedal top: 1.0 — 5.0 mm (0.039 — 0.197 in.)

3-2. (w/ Clutch Booster)
CHECK PEDAL FREEPLAY AND BOOSTER AIR VALVE STROKE

(Pedal Freeplay)

Push in on the pedal until the clutch begins to resist.

Pedal freeplay: 15.0 — 30.0 mm (0.59 — 1.18 in.)

(Booster Air Valve Stroke)

(a) Stop the engine and depress the clutch pedal several times until there is no vacuum left in the clutch booster.

(b) Push in on the pedal with a finger softly until the resistance begins to increase a little.

Booster air valve stroke at pedal top: 5.0 — 9.0 mm (0.20 — 0.35 in.)

HINT: The booster air valve stroke is the amount of the stroke until the booster piston is moved by the booster air valve.

4. IF NECESSARY, ADJUST PEDAL FREEPLAY AND PUSH ROD PLAY OR BOOSTER AIR VALVE STROKE

(a) Loosen the lock nut and turn the push rod until the freeplay and push rod play are correct

(b) Tighten the lock nut.

(c) After adjusting the pedal freeplay, check the pedal height

(d) Connect the air duct and install the lower finish panel

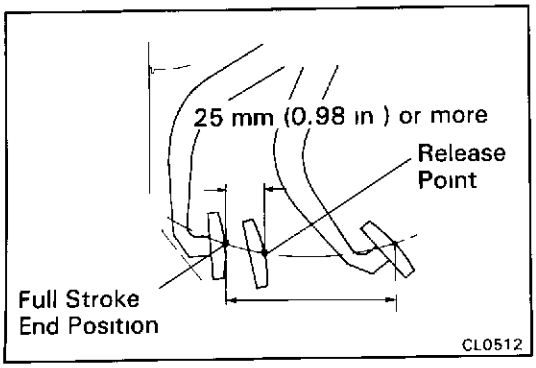

5. INSPECT CLUTCH RELEASE POINT

(a) Pull the parking brake lever and install wheel stopper.

(b) Start the engine and idle the engine.

(c) Without depressing the clutch pedal, slowly shift lever into reverse position until the gears contact.

(d) Gradually depress the clutch pedal and measure the stroke distance from the point the gear noise stops (release point) up to the full stroke end position.

Standard distance: 25 mm (0.98 in.) or more (From pedal stroke end position to release position to release point)

If the distance not as specified, perform the following operation.

- Inspect pedal height.
- Inspect push rod play and pedal freeplay.
- Bleed the clutch line.
- Inspect the clutch cover and disc.

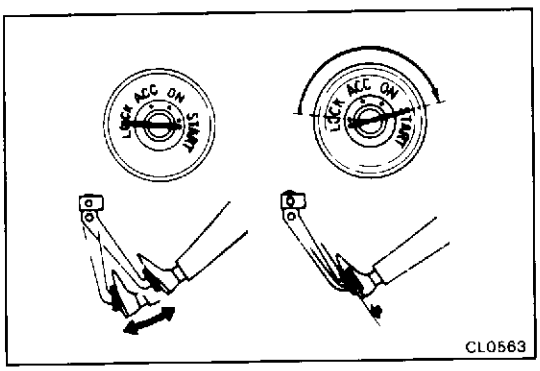

OPERATIONAL TEST OF CLUTCH BOOSTER

HINT: If there is leakage or lack of vacuum, repair before testing.

1. OPERATING CHECK

With the engine stopped, depress the clutch pedal several times. Then, with the pedal at the mid point, start the engine and confirm that the pedal sinks down slightly.

2. AIR-TIGHTNESS CHECK

(a) Depress the clutch pedal several times with the engine stopped. Then, start the engine and depress the clutch pedal and check that there is a light difference in pedal effort.

(b) Start the engine and turn it off after is sufficient vacuum in the booster. Depress the clutch pedal and confirm that the effort required for at least one time is equal to that with the engine running.

HINT: If (a) and (b) are not as stipulates, inspect the vacuum check valve and, if necessary, the clutch booster also.

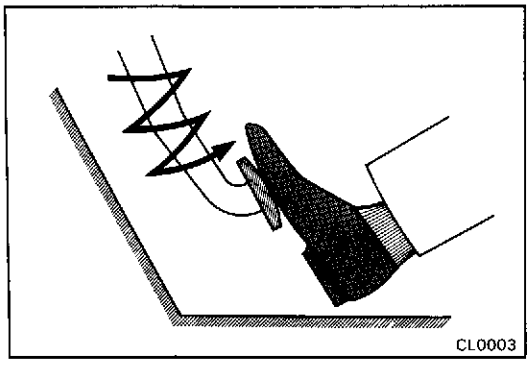
CL0003

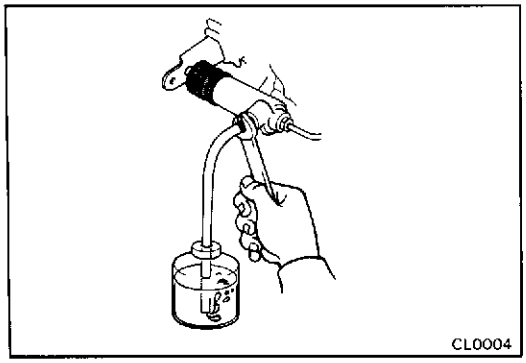
CL0004

BLEEDING OF CLUTCH SYSTEM

HINT: If any work is done on the clutch system or if air is suspected in the clutch lines, bleed the system of air.

NOTICE: Do not let brake fluid remain on a painted surface. Wash it off immediately.

1. **FILL CLUTCH RESERVOIR WITH BRAKE FLUID**

   Check the reservoir frequently. Add fluid if necessary.

2. **CONNECT VINYL TUBE TO BLEEDER PLUG**

   Insert the other end of the tube in a half-full container of brake fluid.

3. **BLEED CLUTCH LINE**

   (a) Slowly pump the clutch pedal several times.

   (b) While pressing on the pedal, loosen the bleeder plug until the fluid starts to run out. Then close the bleeder plug.

   (c) Repeat this procedure until there are no more air bubbles in the fluid.

   Torque: 110 kg-cm (8 ft-lb, 11 N·m)

4. **TIGHTEN BLEEDER PLUG**

CLUTCH MASTER CYLINDER (w/o Clutch Booster)

COMPONENTS

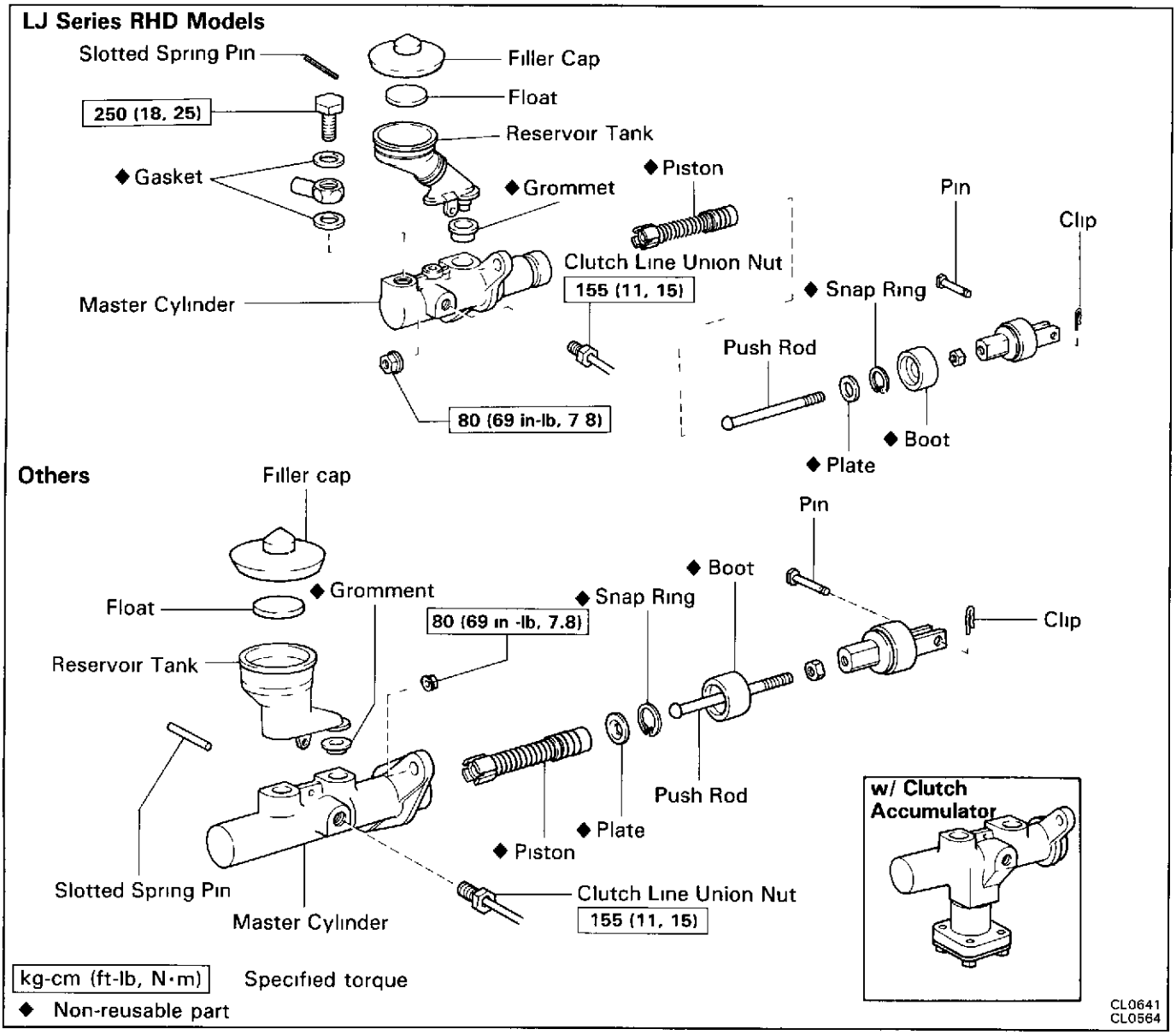

REMOVAL AND INSTALLATION OF CLUTCH MASTER CYLINDER

(MAIN POINT OF REMOVAL AND INSTALLATION)

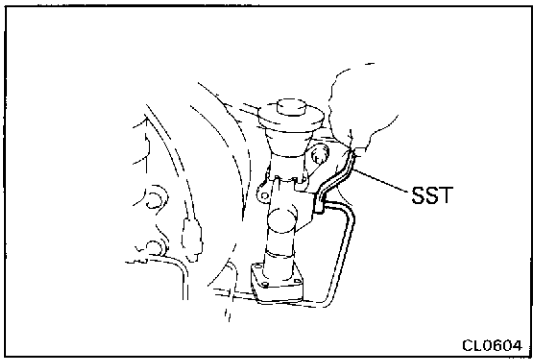

REMOVE MASTER CYLINDER

(a) Draw out fluid with syringe.

(b) Using SST, disconnect the clutch tube.

SST 09751-36011

(c) Remove the clip, clevis pin and return spring

(d) Remove the nut from the room side.

(e) Remove the nut from the engine room side.

(f) Pull out the master cylinder.

DISASSEMBLY OF MASTER CYLINDER

1. **REMOVE RESERVOIR TANK**
   (a) Using a pin punch and a hammer, drive out the slotted spring pin.
   (b) Remove reservoir tank and grommet.
2. **REMOVE PUSH ROD AND PISTON**

INSPECTION OF MASTER CYLINDER

HINT: Clean the disassembled parts with compressed air

1. **INSPECT MASTER CYLINDER BORE FOR SCORING OR CORROSION**
   If a problem is found, clean or replace the cylinder.
2. **INSPECT PISTON AND CUPS FOR WEAR, SCORING, CRACKS OR SWELLING**
   If either one requires replacement, use the parts from the cylinder kit.
3. **INSPECT PUSH ROD FOR WEAR OR DAMAGE**
   If necessary, replace the push rod.

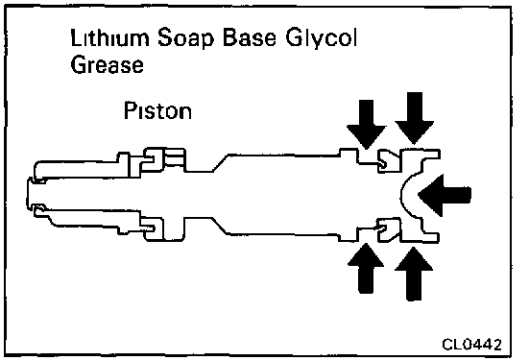

ASSEMBLY OF MASTER CYLINDER

1. **COAT PARTS WITH LITHIUM SOAP BASE GLYCOL GREASE AS SHOWN**
2. **INSERT PISTON INTO CYLINDER**
3. **INSTALL PUSH ROD ASSEMBLY WITH SNAP RING**

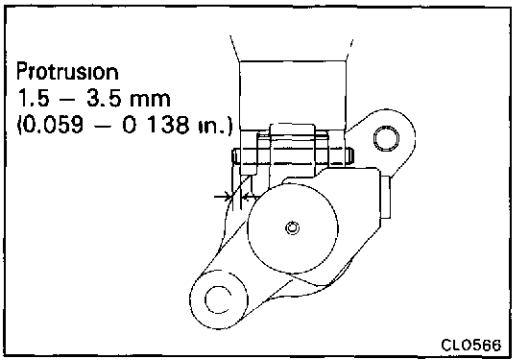

4. **INSTALL RESERVOIR TANK**
   (a) Install reservoir tank and new grommet.
   (b) Using a pin punch and a hammer, drive in the slotted spring pin.

INSTALLATION OF MASTER CYLINDER

(See page CL-6)

1. **INSTALL MASTER CYLINDER**
   Install the mounting nut, and torque them.
   Torque: 80 kg-cm (69 in.-lb, 7.8 N·m)
2. **CONNECT CLUTCH LINE UNION**
   Using SST, connect the union.
   SST 09751-36011
3. **CONNECT PUSH ROD AND INSTALL PIN**
   Install the clip in the push rod pin.
4. **BLEED SYSTEM AND ADJUST CLUTCH PEDAL**
   (See page CL-5)

(w/ Clutch Booster)

COMPONENTS

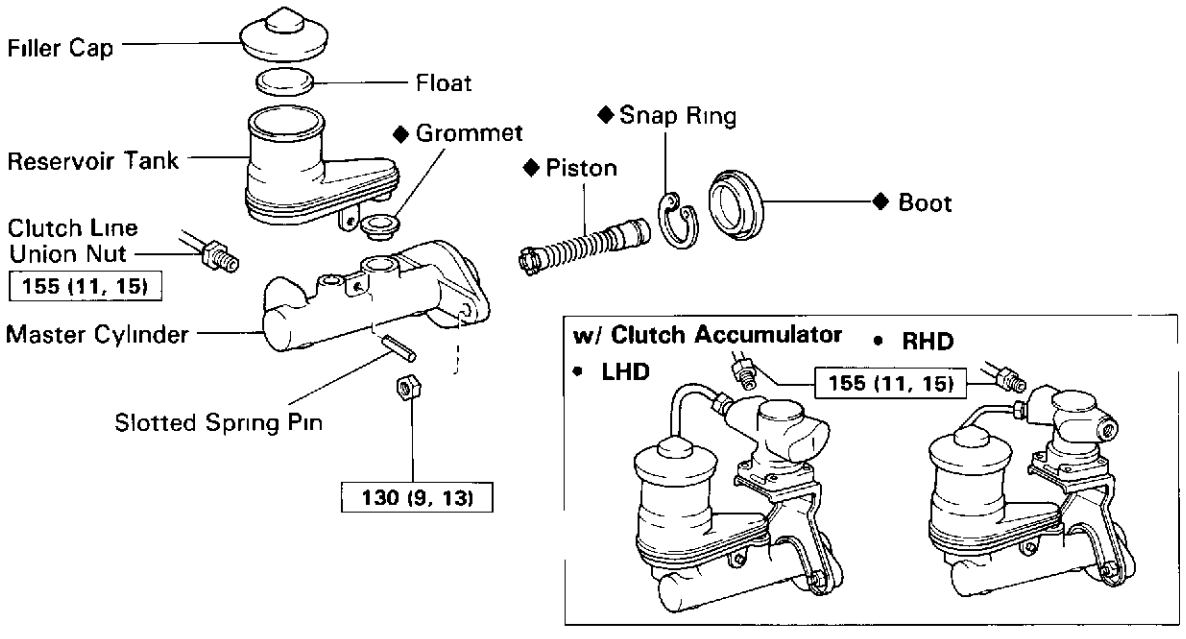

kg-cm (ft-lb, N·m) : Specified torque
◆ Non-reusable part

CL0843

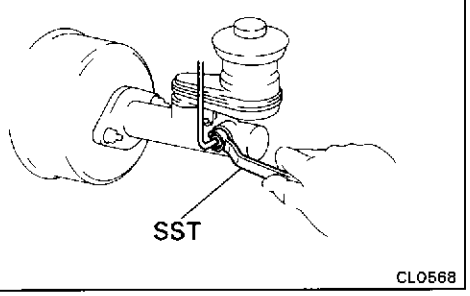

CL0568

REMOVAL AND INSTALLATION OF CLUTCH MASTER CYLINDER

(MAIN POINT OF REMOVAL AND INSTALLATION)

REMOVE MASTER CYLINDER

(a) Draw out fluid with syringe.

(b) Using SST, disconnect the clutch tube

SST 09751-36011

(c) (LHD Models)
Remove two nuts.

(RHD Models)
Remove three nuts.

(d) Pull out the master cylinder.

DISASSEMBLY OF MASTER CYLINDER

1. **REMOVE RESERVOIR TANK**
   (a) Using a pin punch and a hammer, drive out the slotted spring pin.
   (b) Remove reservoir tank and grommet.
2. **REMOVE PISTON**

INSPECTION OF MASTER CYLINDER

HINT: Clean the disassembled parts with compressed air.

1. **INSPECT MASTER CYLINDER BORE FOR SCORING OR CORROSION**
   If a problem is found, clean or replace the cylinder.
2. **INSPECT PISTON AND CUPS FOR WEAR, SCORING, CRACKS OR SWELLING**
   If either one requires replacement, use the parts from the cylinder kit.

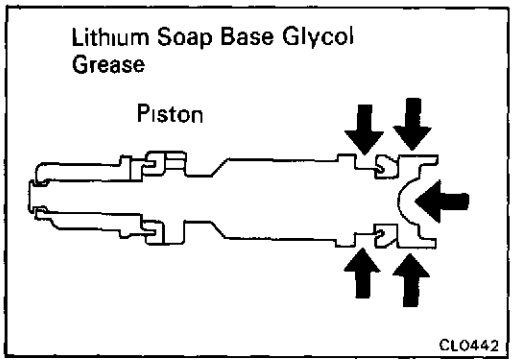

ASSEMBLY OF MASTER CYLINDER

1. **COAT PARTS WITH LITHIUM SOAP BASE GLYCOL GREASE AS SHOWN**
2. **INSTALL PISTON INTO CYLINDER**

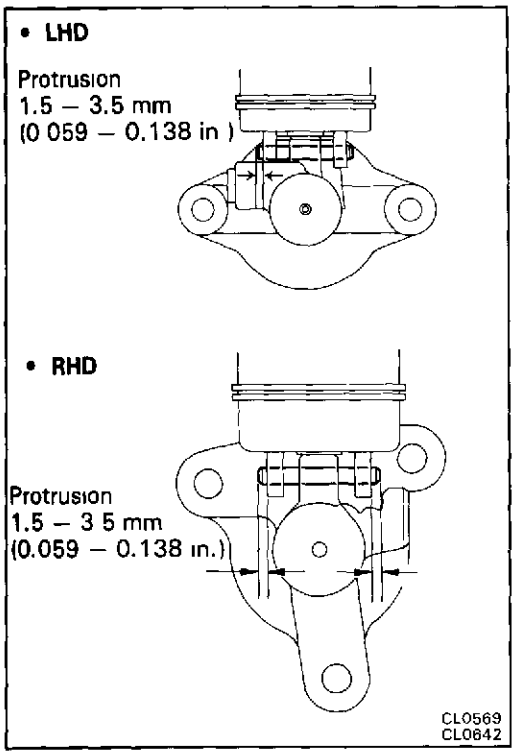

3. **INSTALL RESERVOIR TANK**
   (a) Install reservoir tank and new grommet.
   (b) Using a pin punch and a hammer, drive in the slotted spring pin.

INSTALLATION OF MASTER CYLINDER

(See page CL-8)

1. **ADJUST LENGTH OF CLUTCH BOOSTER PUSH ROD**
   (See step 1 on page CL-16)
2. **INSTALL MASTER CYLINDER WITH MOUNTING NUTS**
   Torque: 130 kg-cm (9 ft-lb, 13 N·m)
3. **CONNECT CLUTCH LINE UNION**
   Using SST, connect the union.
   SST 09751-36011
4. **BLEED SYSTEM AND ADJUST CLUTCH PEDAL**
   (See page CL-5)

CLUTCH BOOSTER

REMOVAL OF CLUTCH BOOSTER

• **LHD Models**

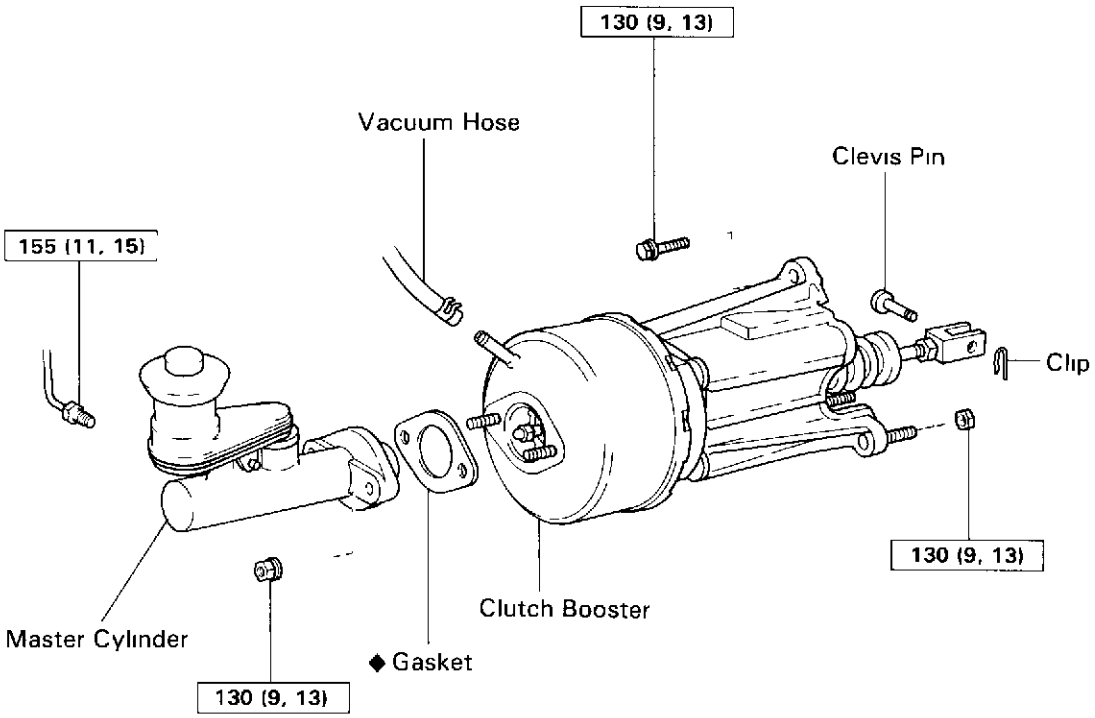

• **RHD Models**

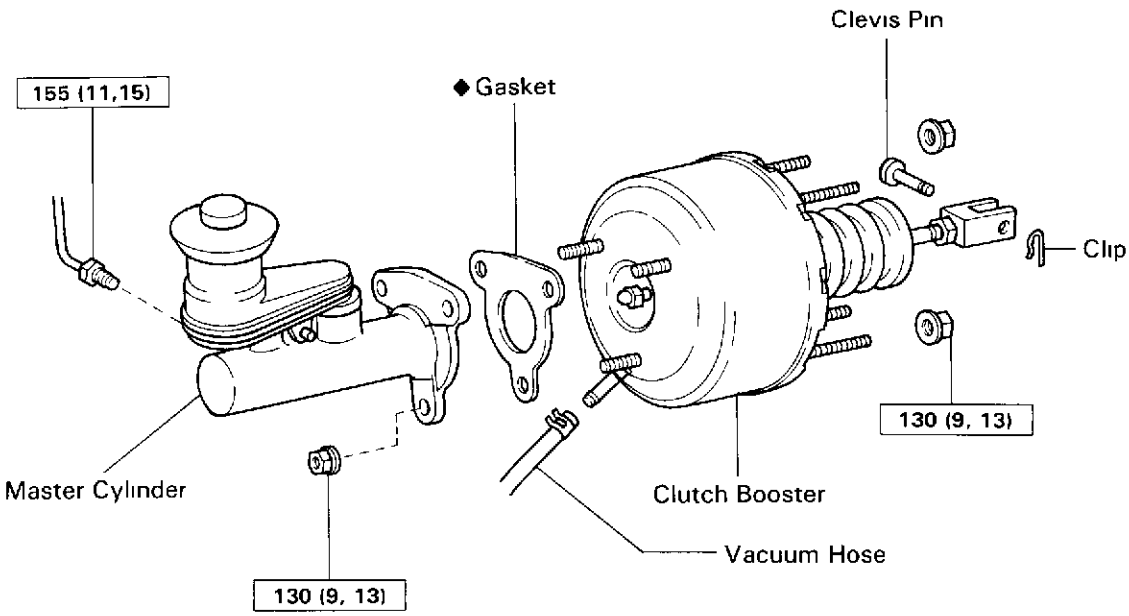

kg-cm (ft-lb, N·m) Specified torque

◆ Non-reusable part

CL0605
CL0635

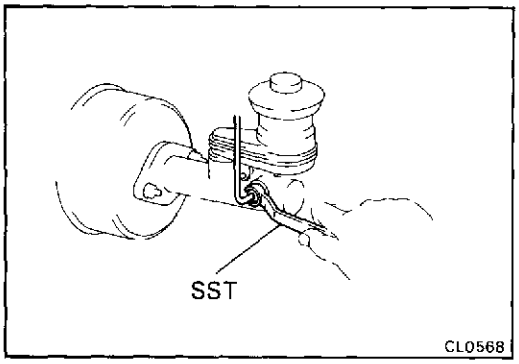

1. **REMOVE MASTER CYLINDER**
   (See page CL-8)
2. **DISCONNECT VACUUM HOSE FROM CLUTCH BOOSTER**
3. **REMOVE CLUTCH PIPE AND VACUUM PIPE CLAMP BOLTS**

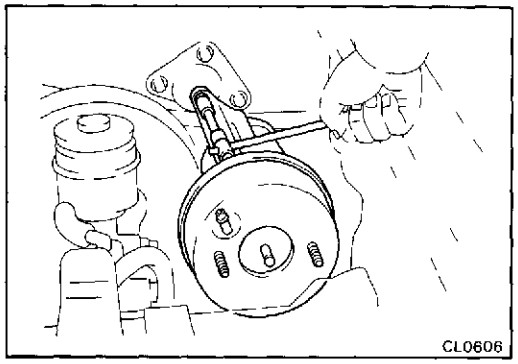

4. **DISCONNECT CLEVIS FROM CLUTCH PEDAL**
   Remove the clip and clevis pin.
5. **(LHD Models)**
   REMOVE CLUTCH BOOSTER WITH BOOSTER CYLINDER BRACKET
   (a) Remove two nuts from room side.
   (b) Remove one bolt and pull off the clutch booster with bracket.
6. **(RHD Models)**
   REMOVE CLUTCH BOOSTER
   Remove four bolts and the clutch booster.

COMPONENTS

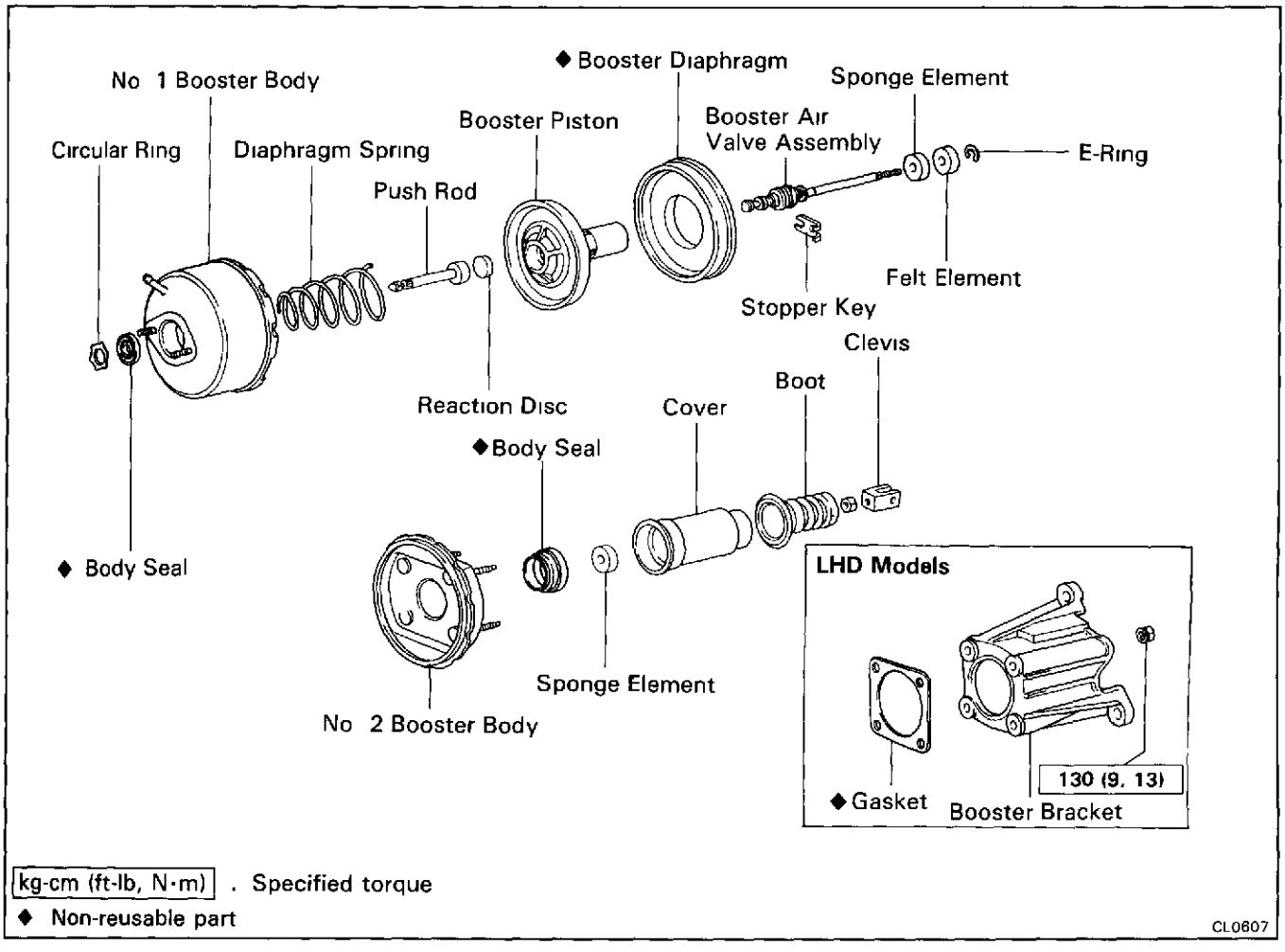

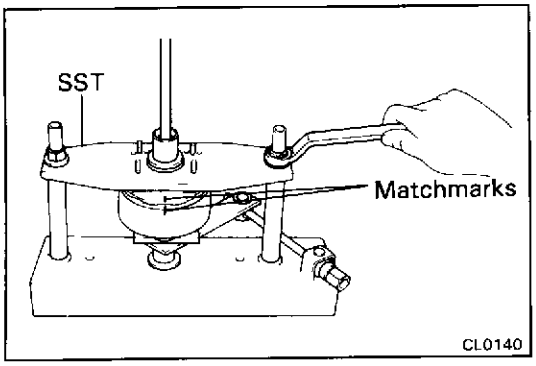

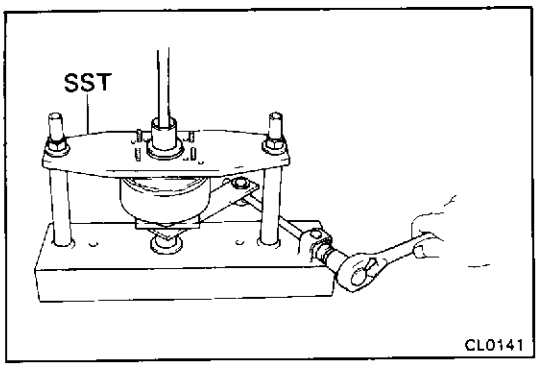

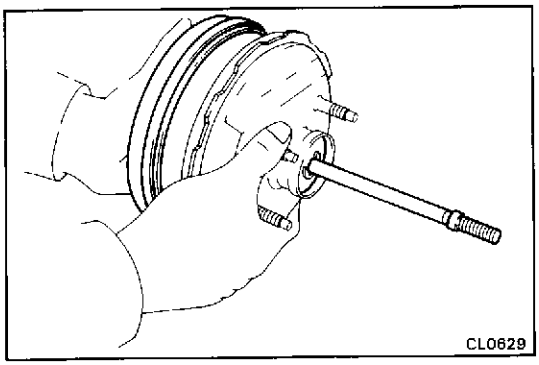

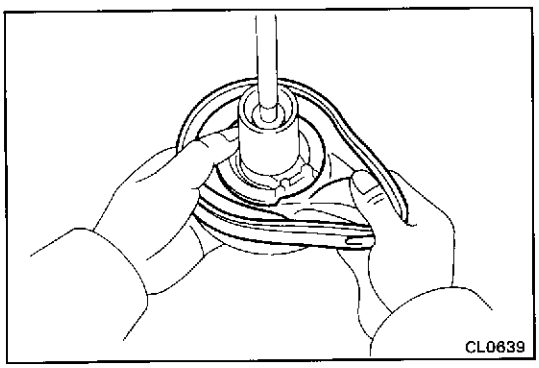

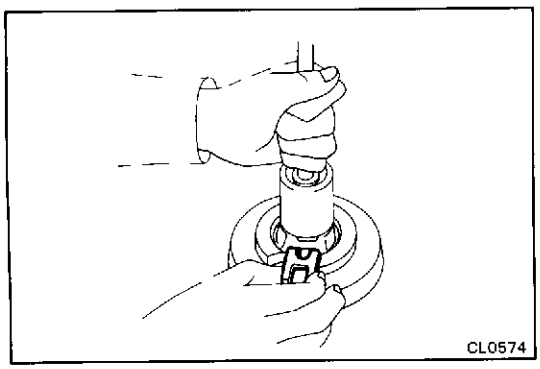

DISASSEMBLY OF CLUTCH BOOSTER

1. **REMOVE CLEVIS**

2. **(LHD Models)**
   REMOVE BOOSTER BRACKET

   Remove four nuts and the booster bracket.

3. **REMOVE PISTON COVER AND BOOT**

   (a) Remove the piston cover and boot.

   (b) Remove the sponge element from the boot.

4. **REMOVE SPONGE AND FELT ELEMENT**

   Using a screwdriver, remove the E-ring and sponge and felt element.

5. **SEPARATE NO.1 AND NO.2 BOOSTER BODIES**

   (a) Put matchmarks on the No.1 and No.2 booster bodies.

   (b) Set the booster in SST.

   SST 09753-00013

   NOTICE: Be careful not to tighten the two nuts of the SST too tightly.

   (c) Turn the No.1 booster body clockwise, until the No.1 and No.2 booster bodies separate.

6. **REMOVE BOOSTER PISTON ASSEMBLY FROM NO.2 BOOSTER BODY**

7. **REMOVE BOOSTER DIAPHRAGM FROM BOOSTER PISTON**

   Pull off the diaphragm

8. **REMOVE BOOSTER AIR VALVE ASSEMBLY FROM BOOSTER PISTON**

   (a) Push down the booster air valve in the booster piston and remove the stopper key.

   (b) Pull off the booster air valve assembly.

9. **REMOVE REACTION DISC FROM BOOSTER PISTON**

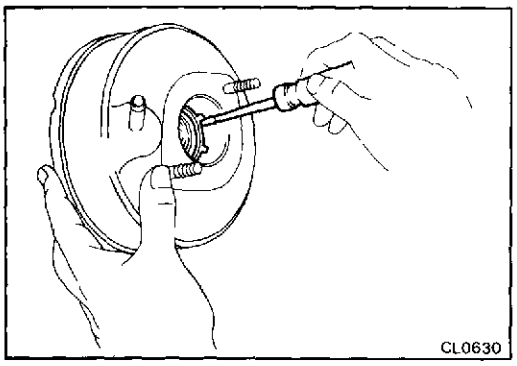

10. REMOVE BODY SEAL FROM NO.1 BOOSTER BODY

Using a screwdriver, pry out the circular ring and remove the body seal.

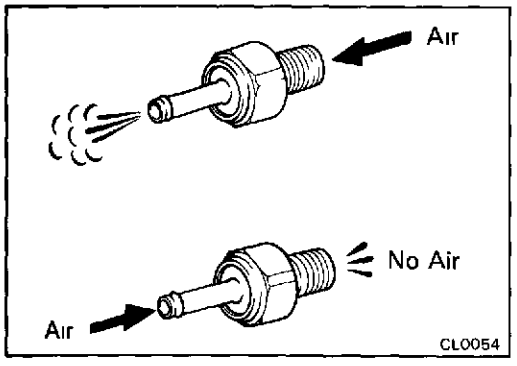

INSPECTION AND REPLACEMENT OF CLUTCH BOOSTER

1. INSPECT CHECK VALVE OPERATION

(a) Check that air flows from the vacuum tank side to the vacuum hose side.

(b) Check that air does not flow the vacuum hose side to the vacuum tank side.

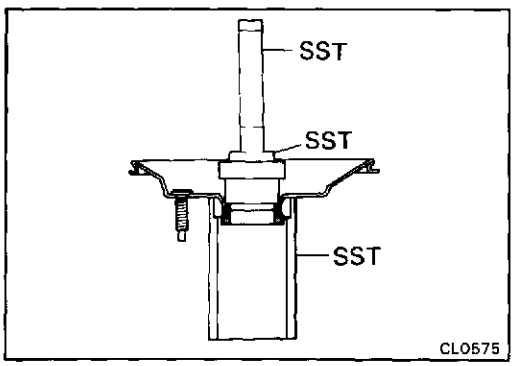

2. IF NECESSARY, REPLACE BODY SEAL FOR NO.2 BOOSTER BODY

(a) Using SST, remove the body sealer.

SST 09630-00012, 09753-30020 and 09612-30012

HINT: Support the No.2 booster body using SST cylinder base only.

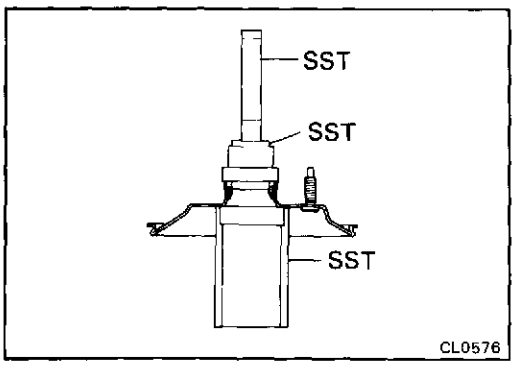

(b) Using SST, drive in the body sealer.

SST 09630-00012, 08753-30020 and 09612-30012

HINT: Support the No.2 booster body using SST cylinder base only

ASSEMBLY OF CLUTCH BOOSTER

(See page CL-10)

1. APPLY SILICONE GREASE TO PARTS SHOWN BELOW

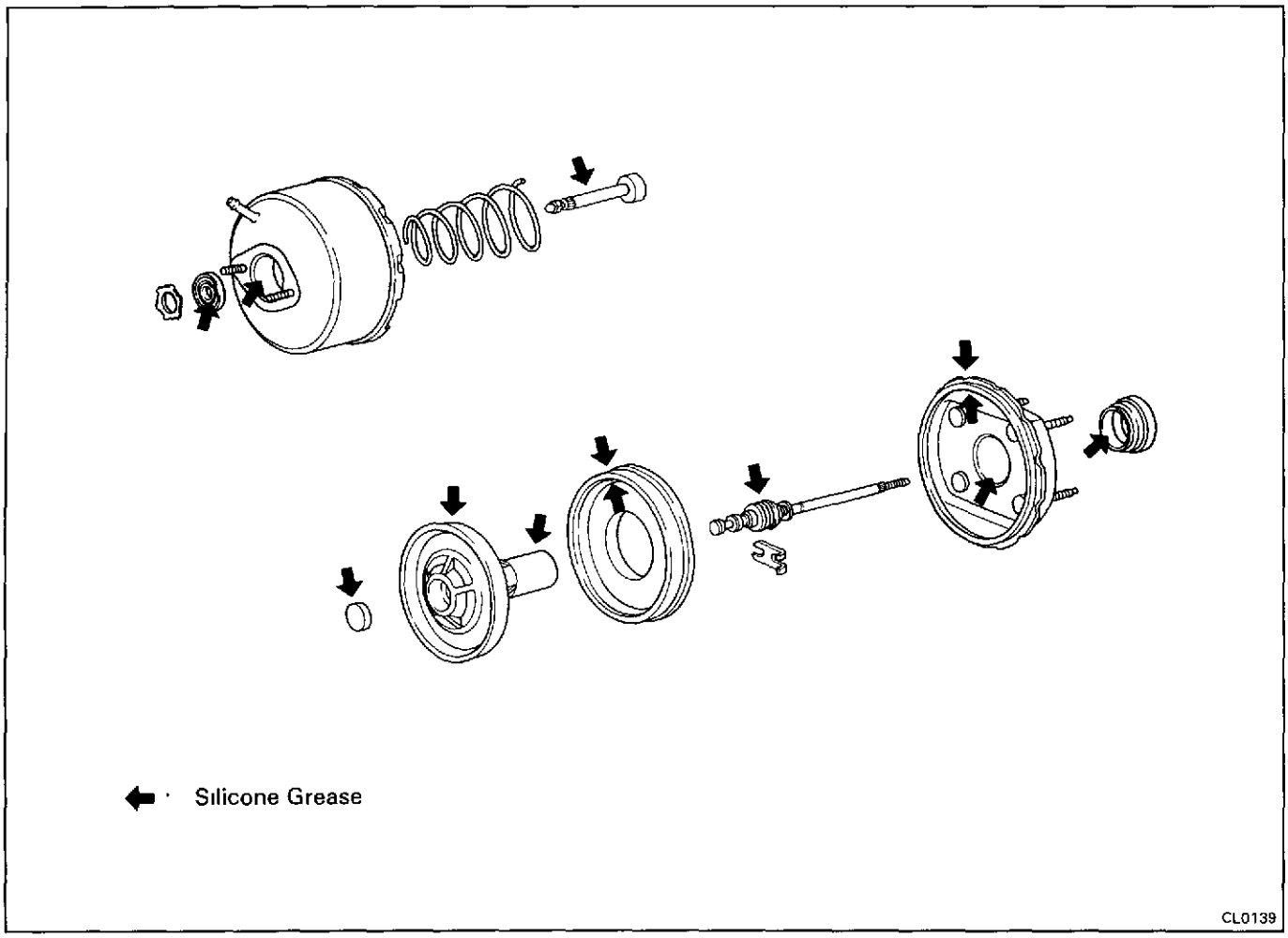

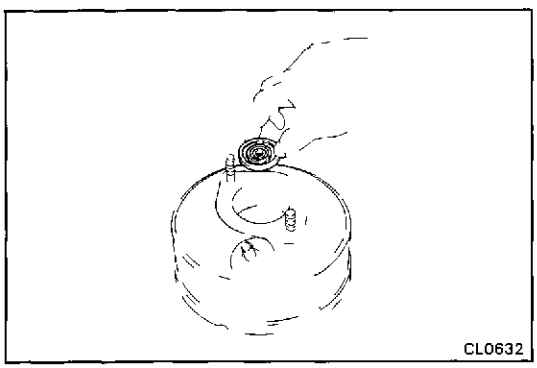

2. INSTALL BODY SEAL TO NO.1 BOOSTER BODY

(a) Place the body seal in position.

(b) Secure the body seal with the circular ring.

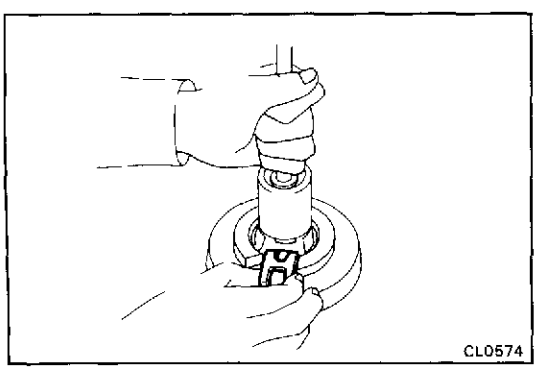

3. INSTALL BOOSTER AIR VALVE ASSEMBLY TO BOOSTER PISTON

(a) Insert the booster air valve in the booster piston.

(b) Push the booster air valve in the booster piston and install the stopper key.

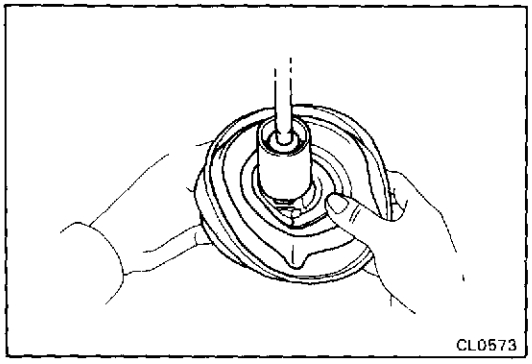

4. INSTALL DIAPHRAGM TO BOOSTER PISTON

Push in the head of the diaphragm.

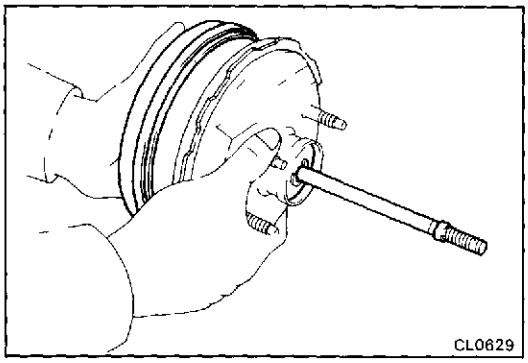

5. INSTALL BOOSTER PISTON ASSEMBLY TO NO.2 BOOSTER BODY

6. INSTALL REACTION DISC TO BOOSTER PISTON

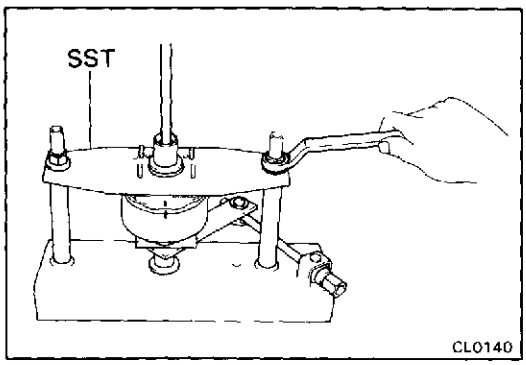

7. ASSEMBLY NO.1 AND NO.2 BOOSTER BODIES

(a) Place the No 1 booster on SST.

SST 09753-00013

(b) Place the push rod, diaphragm spring and No.2 booster body in the No.1 booster body.

(c) Compress the diaphragm spring between the No.1 and No.2 booster bodies.

NOTICE: Be careful not to tighten the two nuts of the SST too tightly.

(d) Turn the No 1 booster body counterclockwise, until the matchmarks match

HINT: If the No 1 booster body is too tight to be turned, apply more silicone grease on the diaphragm edge that contacts the No.1 and No.2 booster bodies

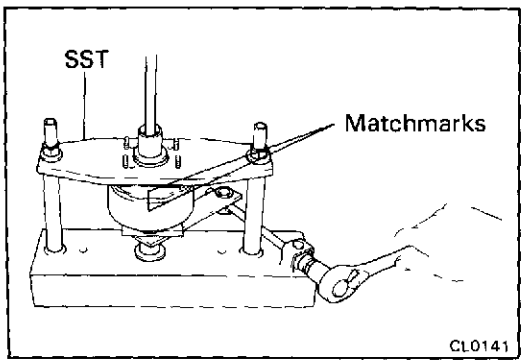

8. INSTALL SPONGE AND FELT ELEMENT

(a) Install the sponge and felt element into the booster.

(b) Install E-ring onto booster air valve assembly.

9. INSTALL PISTON COVER WITH BOOT

(a) Install the sponge element into the boot.

(b) Install the boot to the piston cover.

(c) Install a new gasket onto the booster and the piston cover with the boot.

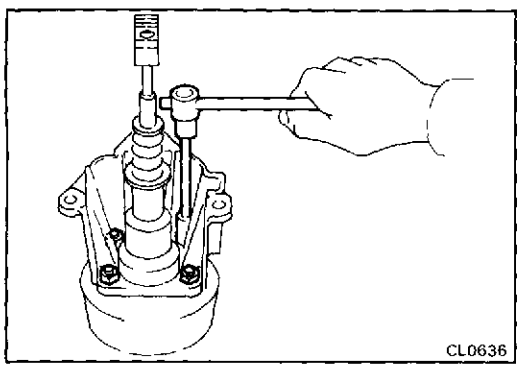

10. (LHD Models)
INSTALL BOOSTER TO BOOSTER BRACKET WITH FOUR NUTS

11. INSTALL CLEVIS

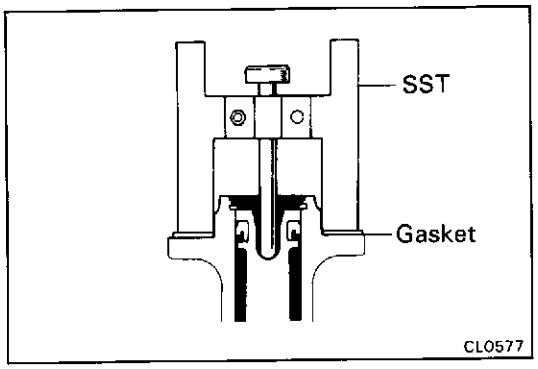

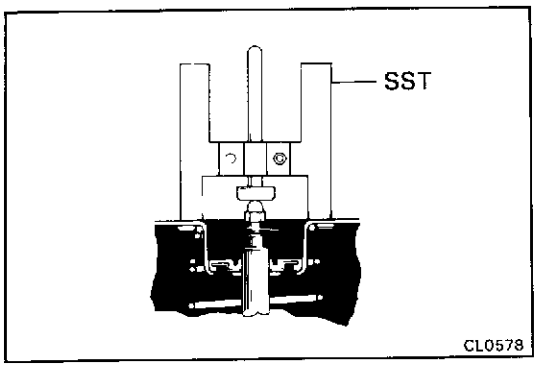

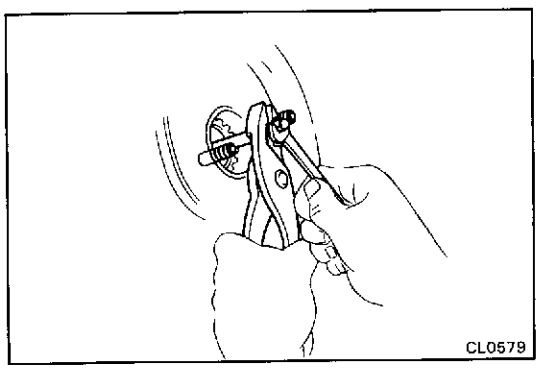

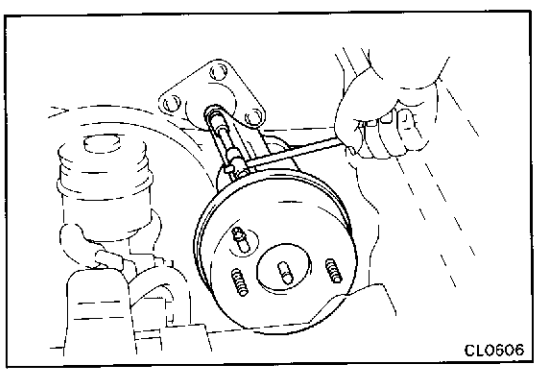

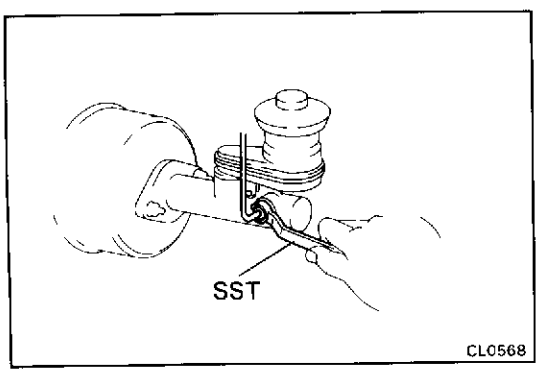

INSTALLATION OF CLUTCH BOOSTER

(See page CL-11)

1. ADJUST LENGTH OF BOOSTER PUSH ROD

(a) Install the gasket on the master cylinder.

(b) Set the SST on the gasket, and lower the pin until its tip slightly touches the piston.

SST 09737-00010

(c) Turn the SST upside down, and set it on the booster.

SST 09737-00010

(d) Measure the clearance between the booster push rod and pin head (SST).

Clearance: 0 mm (0 in.)

(e) Adjust the booster push rod length until the push rod lightly touches the pin head.

HINT: When adjusting the push rod, depress the brade pedal enough so that the push rod sticks out.

2. (LHD Models)
INSTALL CLUTCH BOOSTER WITH BOOSTER CYLINDER BRACKET TO BODY

(RHD Models)
INSTALL CLUTCH BOOSTER TO BODY

3. CONNECT CLEVIS TO CLUTCH PEDAL

Connect the clevis to the clutch pedal with the clevis pin and clip.

4. INSTALL MASTER CYLINDER TO CLUTCH BOOSTER
(See page CL-8)

Torque: 130 kg-cm (9 ft-lb, 13 N·m)

5. CONNECT CLUTCH LINE UNION

Using SST, connect the union.

SST 09751-36011

6. CONNECT VACUUM HOSE TO CLUTCH BOOSTER

7. ADJUST CLUTCH PEDAL AND BLEED SYSTEM
(See page CL-5)

CLUTCH ACCUMULATOR

COMPONENTS

•w/o Clutch Booster

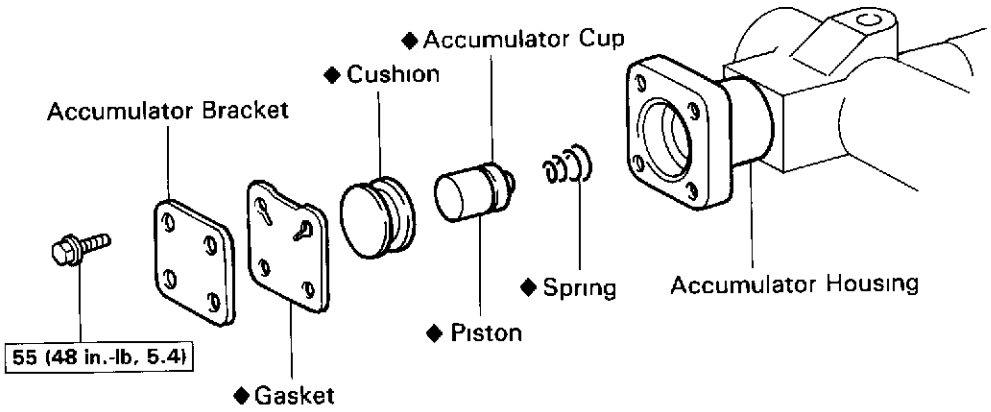

• w/ Clutch Booster

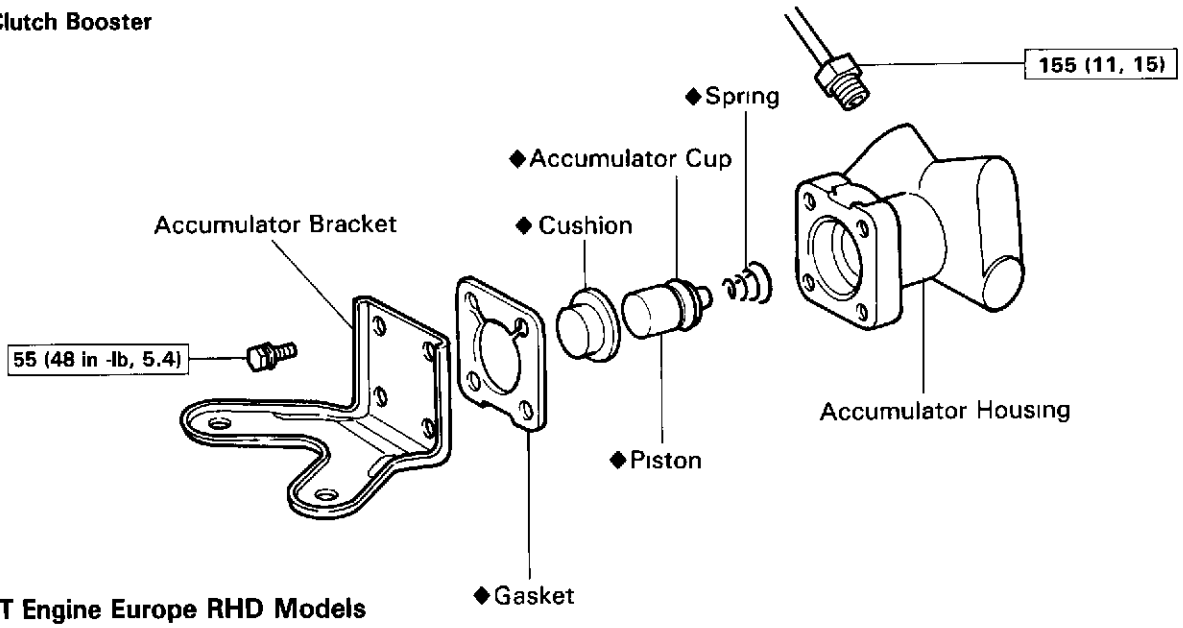

•2L-T Engine Europe RHD Models

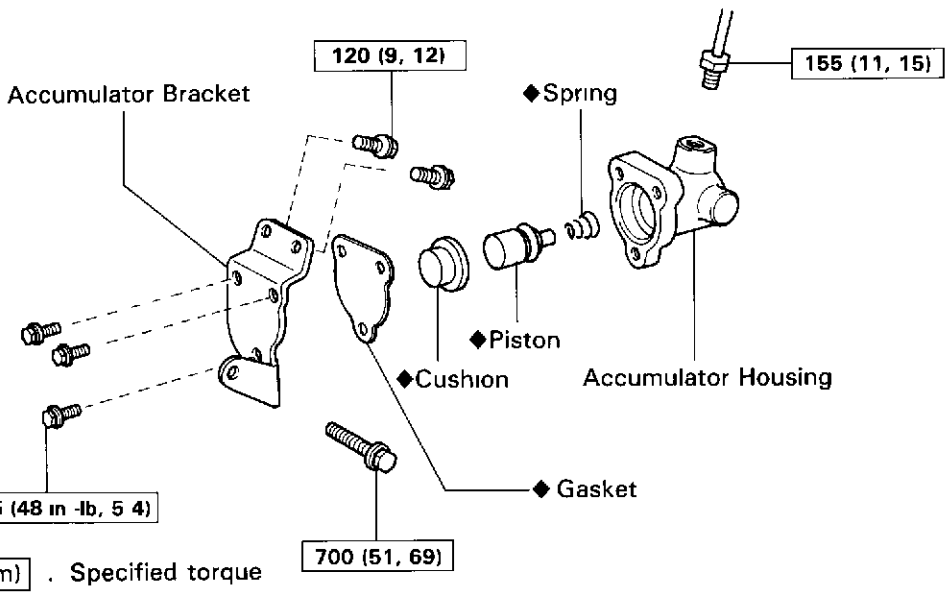

kg-cm (ft-lb, N·m) . Specified torque

◆ Non-reusable part

CL0580
CL0581
CL0608

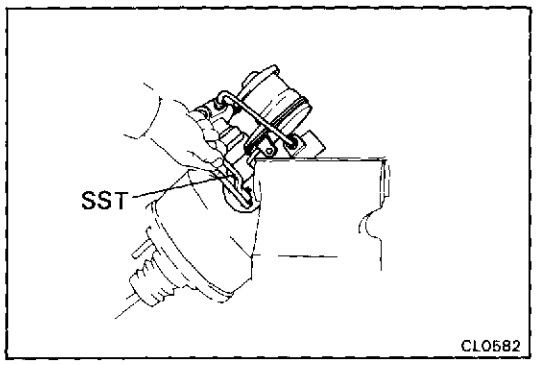

REMOVAL OF CLUTCH ACCUMULATOR

(MAIN POINT OF REMOVAL AND INSTALLATION)

(w/o Clutch Booster)

[2L-T Engine Europe RHD Models]

REMOVE CLUTCH ACCUMULATOR

Remove a bolt and the clutch accumulator with bracket from transmission.

[Others]

REMOVE MASTER CYLINDER
(See page CL-6)

(w/ Clutch Booster)

1. **REMOVE MASTER CYLINDER**
   (See page CL-8)

2. **REMOVE CLUTCH ACCUMULATOR**
   Remove two bolts and clutch accumulator with bracket.

w/o Clutch Booster

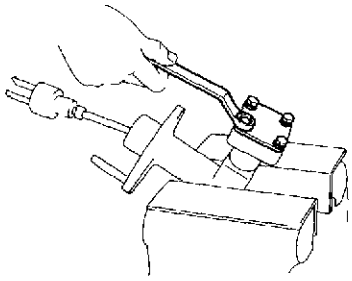

w/ Clutch Booster

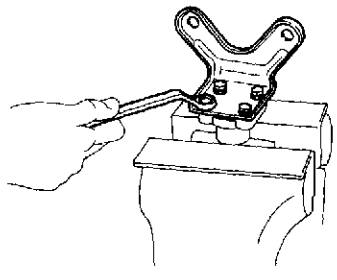

DISASSEMBLY OF CLUTCH ACCUMULATOR

1. **REMOVE CLUTCH BRACKET**
   (a) (2L-T Engine Europe RHD Models)
   Remove three bolts and the bracket.
   (b) (Others)
   Remove four bolts and the bracket.
   (c) Remove the gasket from the bracket

2. **REMOVE CUSHION**

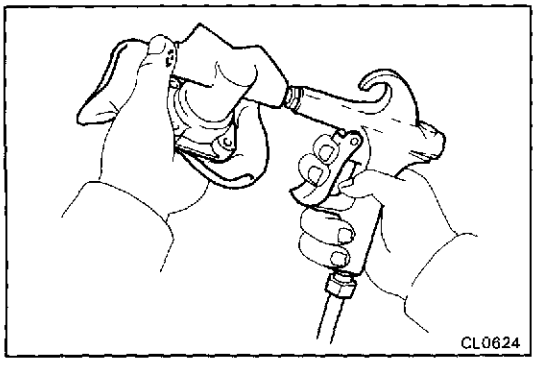

3. **REMOVE PISTON AND SPRING**
   Using compressed air, remove the piston and spring.

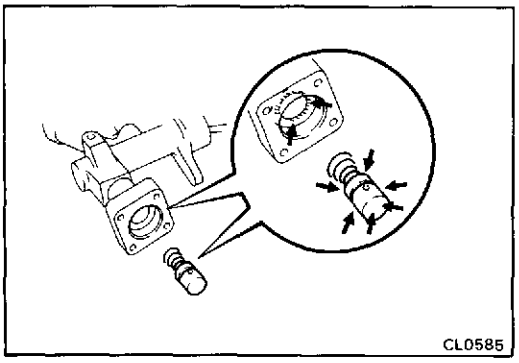

ASSEMBLY OF CLUTCH ACCUMULATOR

(w/o Clutch Booster)

(See page CL-17)

1. **COAT PISTON AND ACCUMULATOR BODY WITH LITHIUM SOAP BASE GLYCOL GREASE, AS SHOWN**

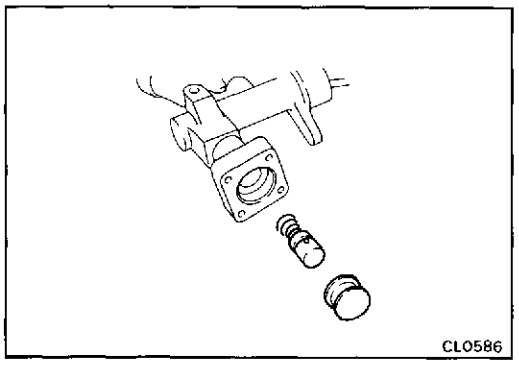

2. **INSTALL SPRING, PISTON AND CUSHION INTO ACCUMULATOR**

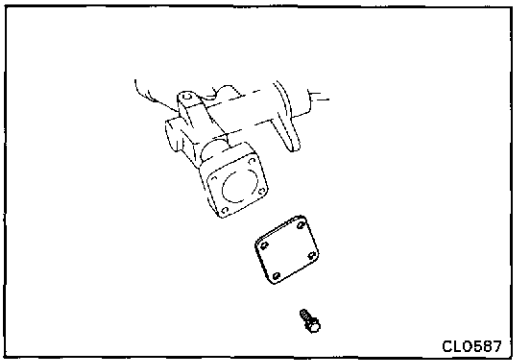

3. **INSTALL ACCUMULATOR BRACKET**
   (a) Install a new gasket to the bracket.
   (b) (2L-T Engine Europe RHD Models)
   Install the bracket to the accumulator and tighten the three bolts.

   Torque: 55 kg-cm (48 in.-lb, 5.4 N·m)

   (c) (Others)
   Install the bracket to the accumulator and tighten the four bolts.

   Torque: 55 kg-cm (48 in.-lb, 5.4 N·m)

(w/ Clutch Booster)

(See page CL-17)

4. **COAT PISTON AND ACCUMULATOR BODY WITH LITHIUM SOAP BASE GLYCOL GREASE, AS SHOWN**

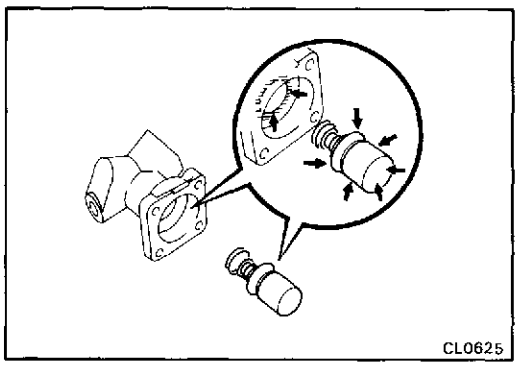

5. **INSTALL SPRING, PISTON AND CUSHION INTO ACCUMULATOR**

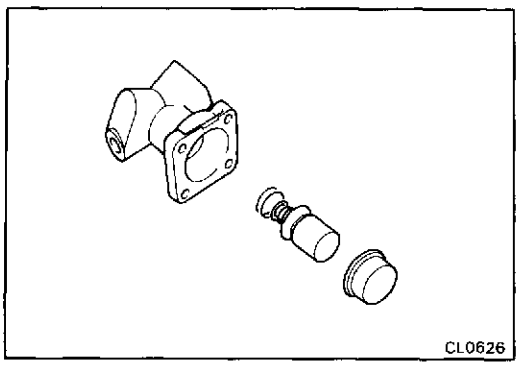

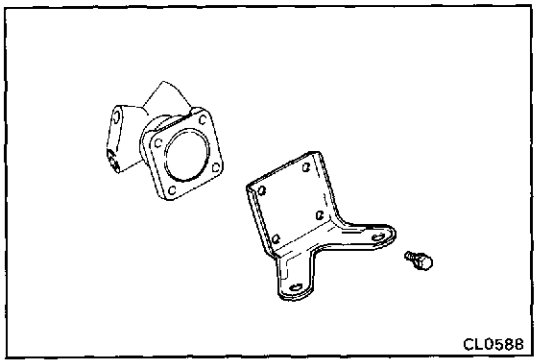

6. INSTALL ACCUMULATOR BRACKET

(a) Install a new gasket to the bracket.

(b) Install the bracket to the accumulator and tighten the four bolts.

Torque: 55 kg-cm (48 in.-lb, 5.4 N·m)

INSTALLATION OF CLUTCH ACCUMULATOR

(w/o Clutch Booster)

[2L-T Engine Europe RHD Models]

INSTALL CLUTCH ACCUMULATOR

Install a bolt and the clutch accumulator with bracket to transmission.

Torque: 155 kg-cm (11 ft-lb, 15 N·m)

[Others]

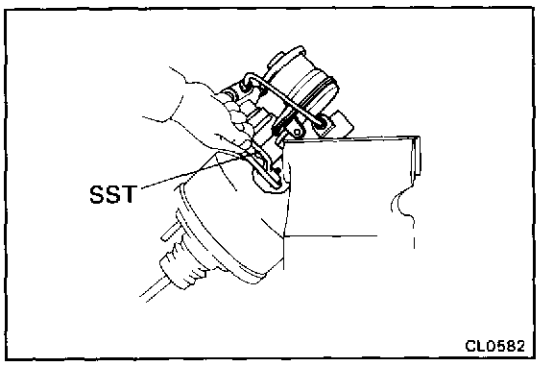

INSTALL MASTER CYLINDER
(See page CL-6)

(w/ Clutch Booster)

1. INSTALL CLUTCH ACCUMULATOR

Install two bolts and clutch accumulator with bracket.

2. CONNECT CLUTCH LINE TUBE

Using SST, connect the clutch line tube.

SST 09751-36011

Torque: 155 kg-cm (11 ft-lb, 15 N·m)

3. INSTALL MASTER CYLINDER
(See page CL-8)

4. FILL RESERVOIR WITH BRAKE FLUID AND BLEED CLUTCH SYSTEM

5. CHECK FOR LEAKS

CLUTCH RELEASE CYLINDER

COMPONENTS

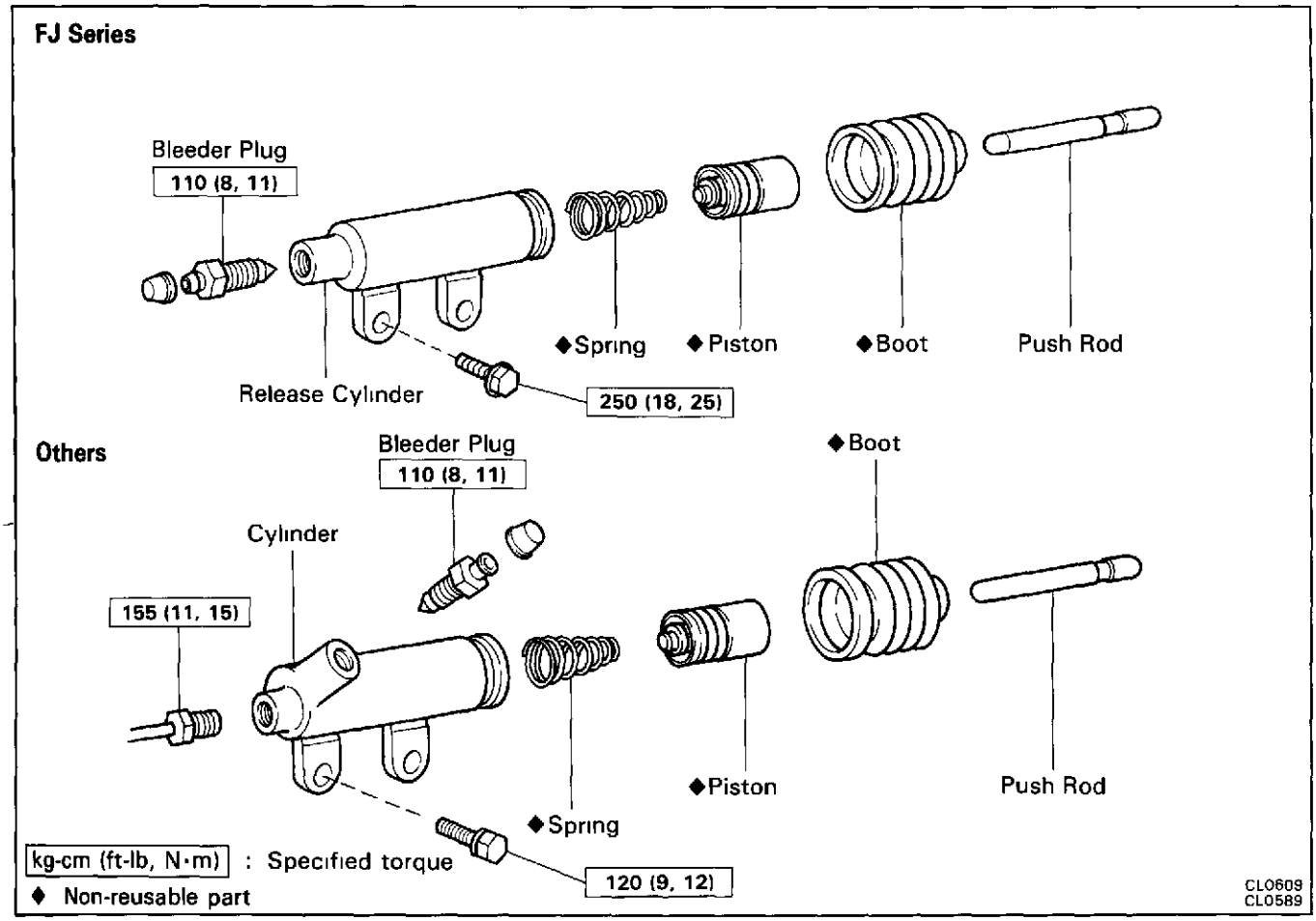

REMOVAL AND INSTALLATION OF CLUTCH RELEASE CYLINDER

(MAIN POINT OF REMOVAL AND INSTALLATION)

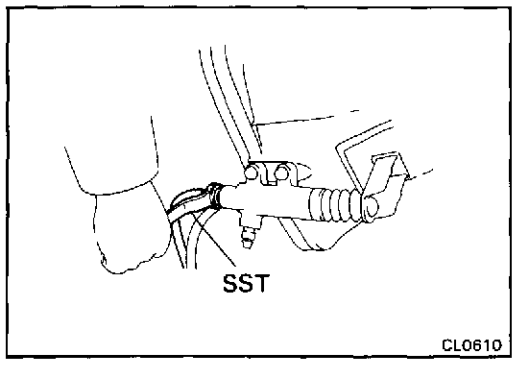

1. **DISCONNECT AND CONNECT CLUTCH LINE TUBE**
   Using SST, disconnect and connect the tube.
   SST 09751-36011

2. **INSPECT RELEASE CYLINDER BORE FOR SCORING OR CORROSION**
   If a problem is found, clean or replace the cylinder.

3. **INSPECT PISTON AND CUPS FOR WEAR, SCORING, CRACKS OR SWELLING**
   If either one requires replacement, use the parts from the cylinder kit.

4. **INSPECT PUSH ROD FOR WEAR OR DAMAGE**
   If necessary, replace the push rod.

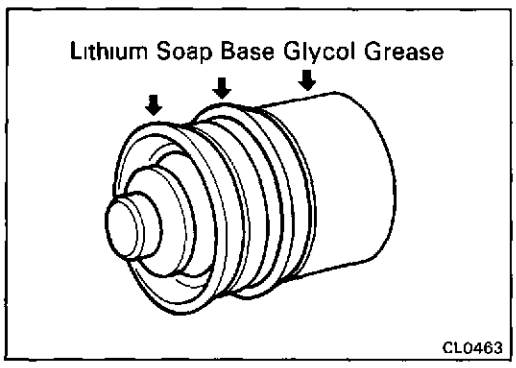

5. **COAT PISTON WITH LITHIUM SOAP BASE GLYCOL GREASE AS SHOWN**

6. **BLEED CLUTCH SYSTEM**
   (See page CL-5)

CLUTCH UNIT

REMOVAL OF CLUTCH UNIT

Remove the parts as shown.

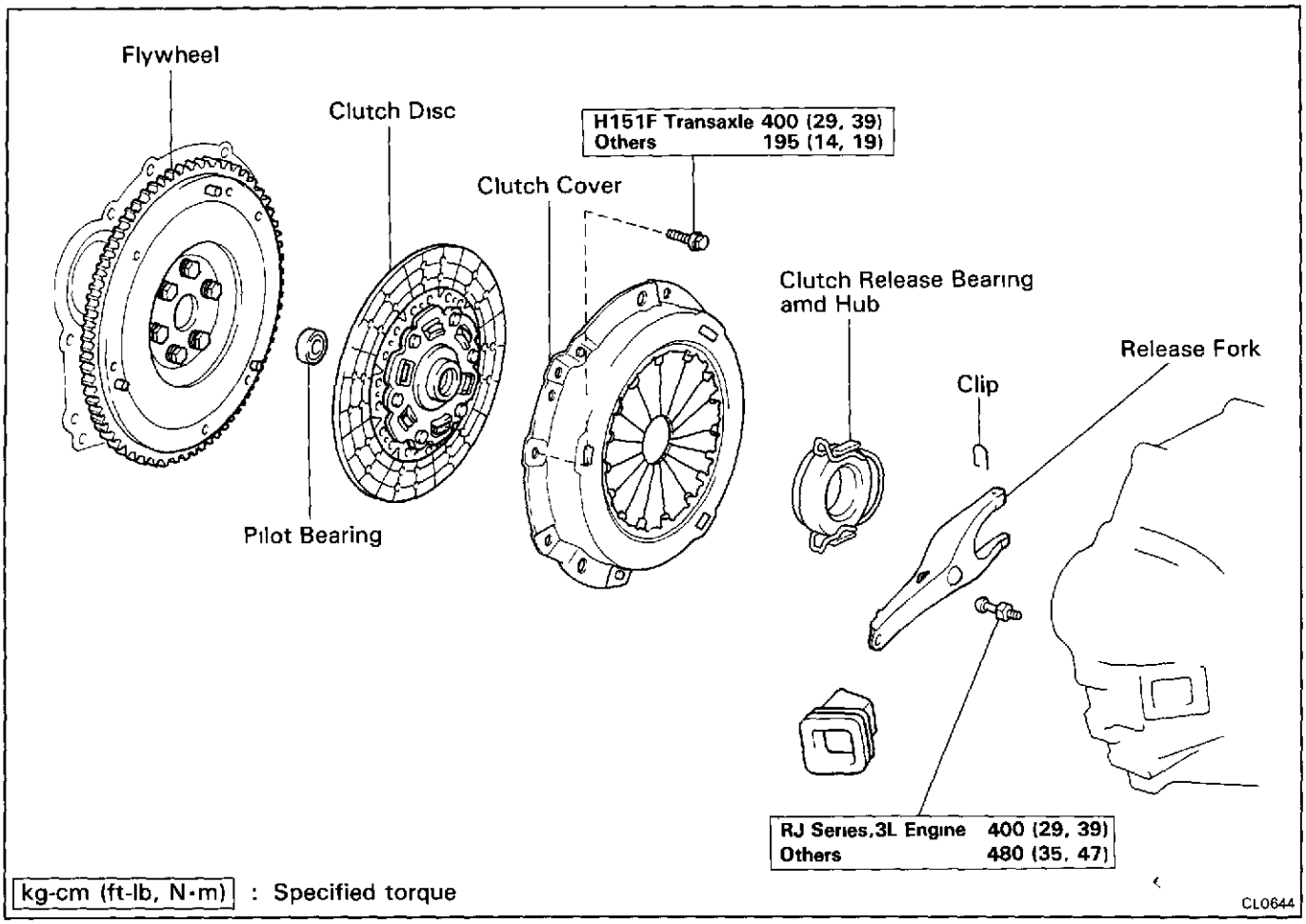

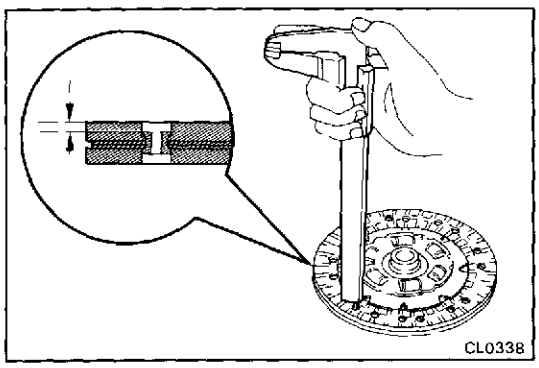

INSPECTION OF CLUTCH PARTS

1. **INSPECT CLUTCH DISC FOR WEAR OR DAMAGE**

   Using calipers, measure the rivet head depth

   Maximum rivet depth: 0.3 mm (0.012 in.)

   If a problem is found, replace the clutch disc.

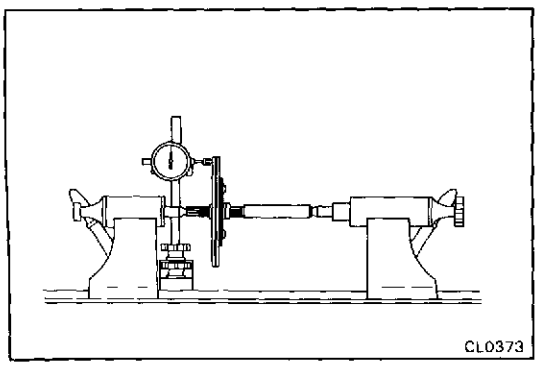

2. **INSPECT CLUTCH DISC RUNOUT**

   Using a dial indicator, check the disc runout.

   Maximum runout: 0.8 mm (0.031 in.)

   If runout is excessive, replace the clutch disc.

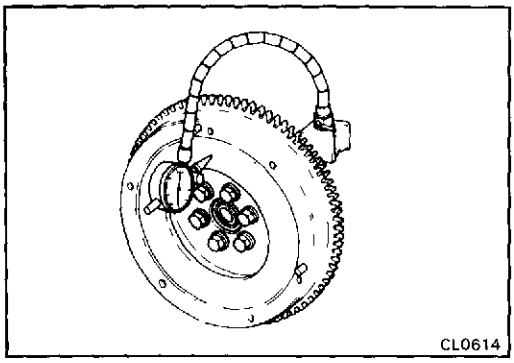

3. INSPECT FLYWHEEL RUNOUT

Using a dial indicator, check the flywheel runout.

Maximum runout: 0.1 mm (0.004 in.)

If runout is excessive, replace the flywheel.

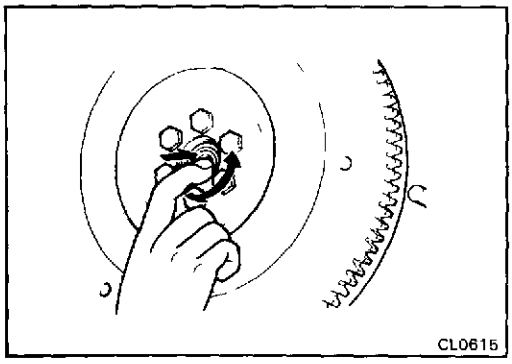

4. INSPECT PILOT BEARING

Turn the bearing by hand while applying force in the axial direction.

If the bearing sticks or has much resistance, replace the pilot bearing.

HINT: The bearing is permanently lubricated and requires no cleaning or lubrication.

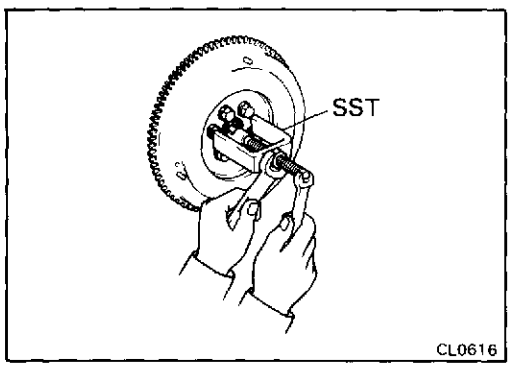

5. IF NECESSARY, REPLACE PILOT BEARING

(a) Using SST, remove the pilot bearing.

SST 09303-35011

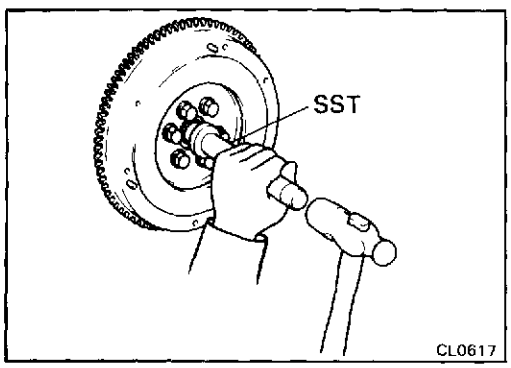

(b) Using SST, install the pilot bearing.

SST 09304-30012

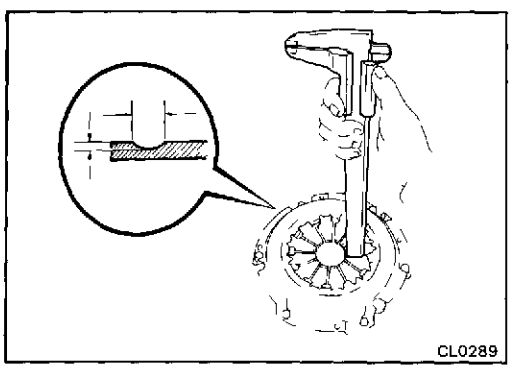

6. INSPECT DIAPHRAGM SPRING FOR WEAR

Using calipers, measure the diaphragm spring for depth and width of wear.

Maximum: Depth 0.6 mm (0.024 in.)
Width 5.0 mm (0.197 in.)

If necessary, replace the clutch cover.

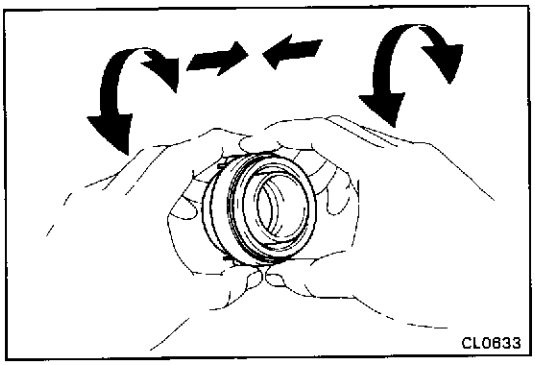

7. INSPECT RELEASE BEARING

Turn the bearing by hand while applying force in the axial direction.

HINT: The bearing is permanently lubricated and requires no cleaning or lubrication.

If a problem is found, replace th bearing.

INSTALLATION OF CLUTCH UNIT

(MAIN POINT OF INSTALLATION)

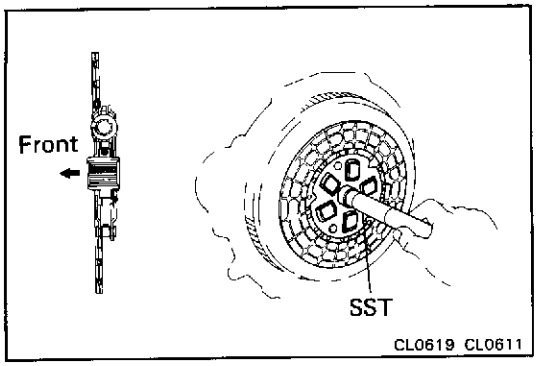

1. INSTALL CLUTCH DISC AND COVER ON FLYWHEEL

(a) Insert the SST in the clutch disc, and then set them and the cover in position.

SST 09301-55022

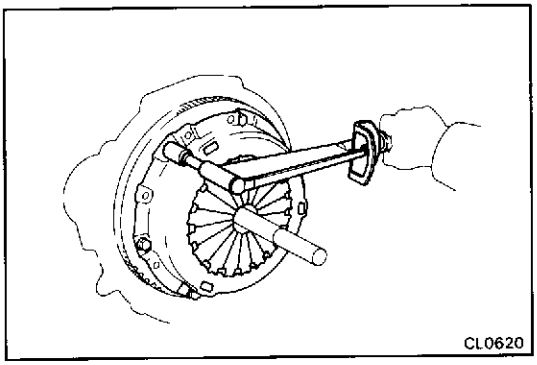

2. INSTALL CLUTCH COVER

(a) Align the matchmarks on the clutch cover and flywheel.

(b) Torque the bolts on the clutch cover in the order shown.

Torque: 195 kg-cm (14 ft-lb, 19 N·m)

HINT: Temporarily tighten the No.1 and No.2 bolts.

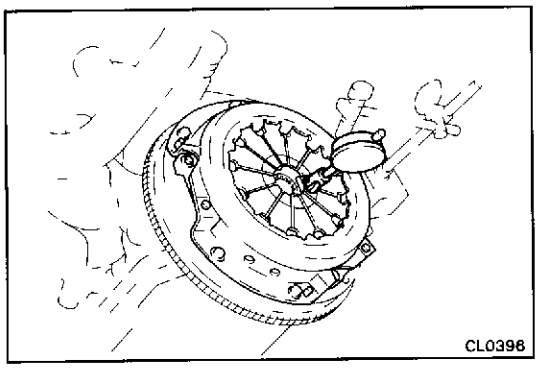

3. CHECK DIAPHRAGM SPRING TIP ALIGNMENT

Using dial indicator, check the diaphragm spring tip alignment.

Maximum non-alignment: 0.5 mm (0.020 in.)

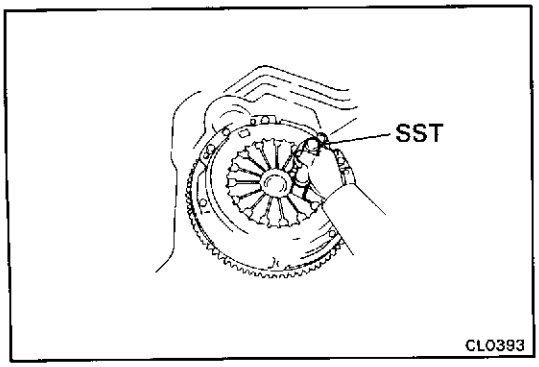

If alignment is not as specified, using SST, adjust the diaphragm spring tip alignment.

SST 09333-00013

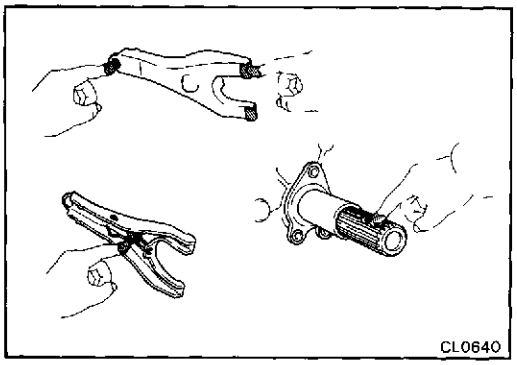

4. **APPLY MOLYBDENUM DISULPHIDE LITHIUM BASE GREASE (NLGI NO.2) AS SHOWN**

MANUAL TRANSMISSION

	Page
DESCRIPTION	MT-2
PRECAUTIONS	MT-4
TROUBLESHOOTING	MT-4
REMOVAL AND INSTALLATION OF TRANSMISSION	MT-5
(G40 AND G52 TRANSMISSIONS)	
COMPONENTS	MT-12
DISASSEMBLY OF TRANSMISSION	MT-15
COMPONENT PARTS	MT-24
Input Shaft Assembly	MT-24
Output Shaft Assembly	MT-26
Counter Gear Assembly and Reverse Idler Gear	MT-35
Transfer Adaptor	MT-39
Front Bearing Retainer	MT-41
ASSEMBLY OF TRANSMISSION	MT-42
(H41 AND H55F TRANSMISSIONS)	
COMPONENTS	MT-54
DISASSEMBLY OF TRANSMISSION	MT-56
COMPONENT PARTS	MT-62
Input Shaft Assembly	MT-62
Output Shaft Assembly	MT-64
Counter Gear Assembly	MT-71
Transfer Adaptor	MT-74
Front Bearing Retainer	MT-76
Case Cover Assembly	MT-77
Transmission Case Assembly	MT-89
ASSEMBLY OF TRANSMISSION	MT-92
(R141F, R150F AND R151F TRANSMISSIONS)	
COMPONENTS	MT-99
DISASSEMBLY OF TRANSMISSION	MT-101
COMPONENT PARTS	MT-109
Input Shaft Assembly	MT-109
Output Shaft Assembly	MT-111
Counter Gear Assembly and Reverse Idler Gear	MT-119
Transfer Adaptor	MT-122
Front Bearing Retainer	MT-124
ASSEMBLY OF TRANSMISSION	MT-125

DESCRIPTION

- Transmission types, G40, G52, H41, H55F, R141F, R150F AND R151F are constant mesh synchronizer for forward gears and a sliding mesh reverse gear
- The illustrations below show the engagements of transmission gears.

1st

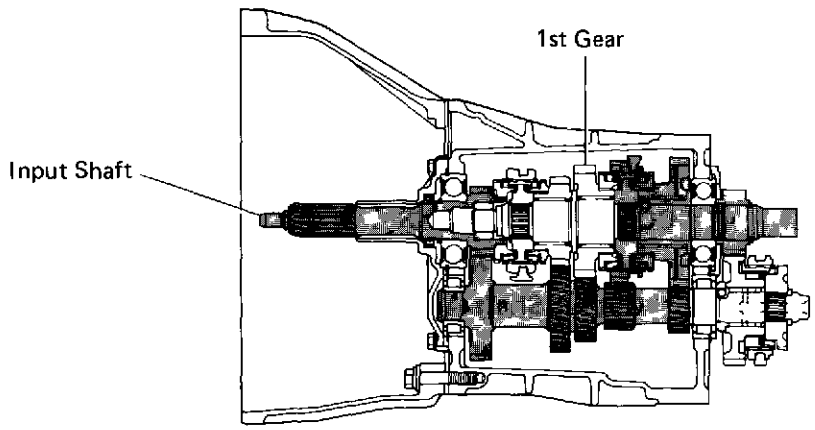

2nd

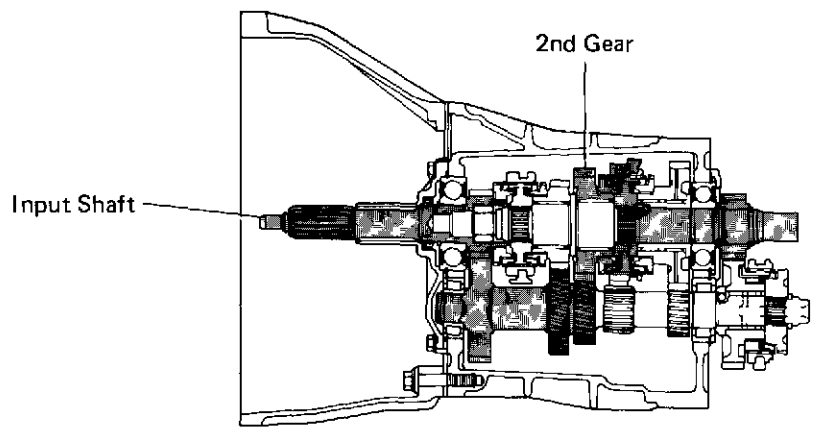

3rd

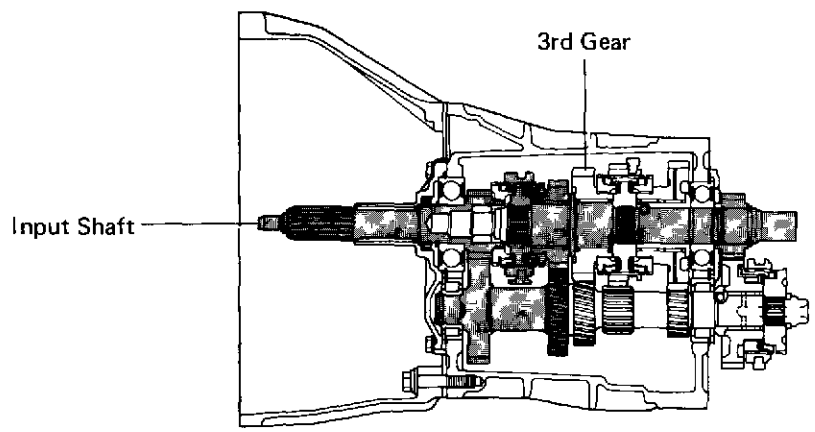

GM0443

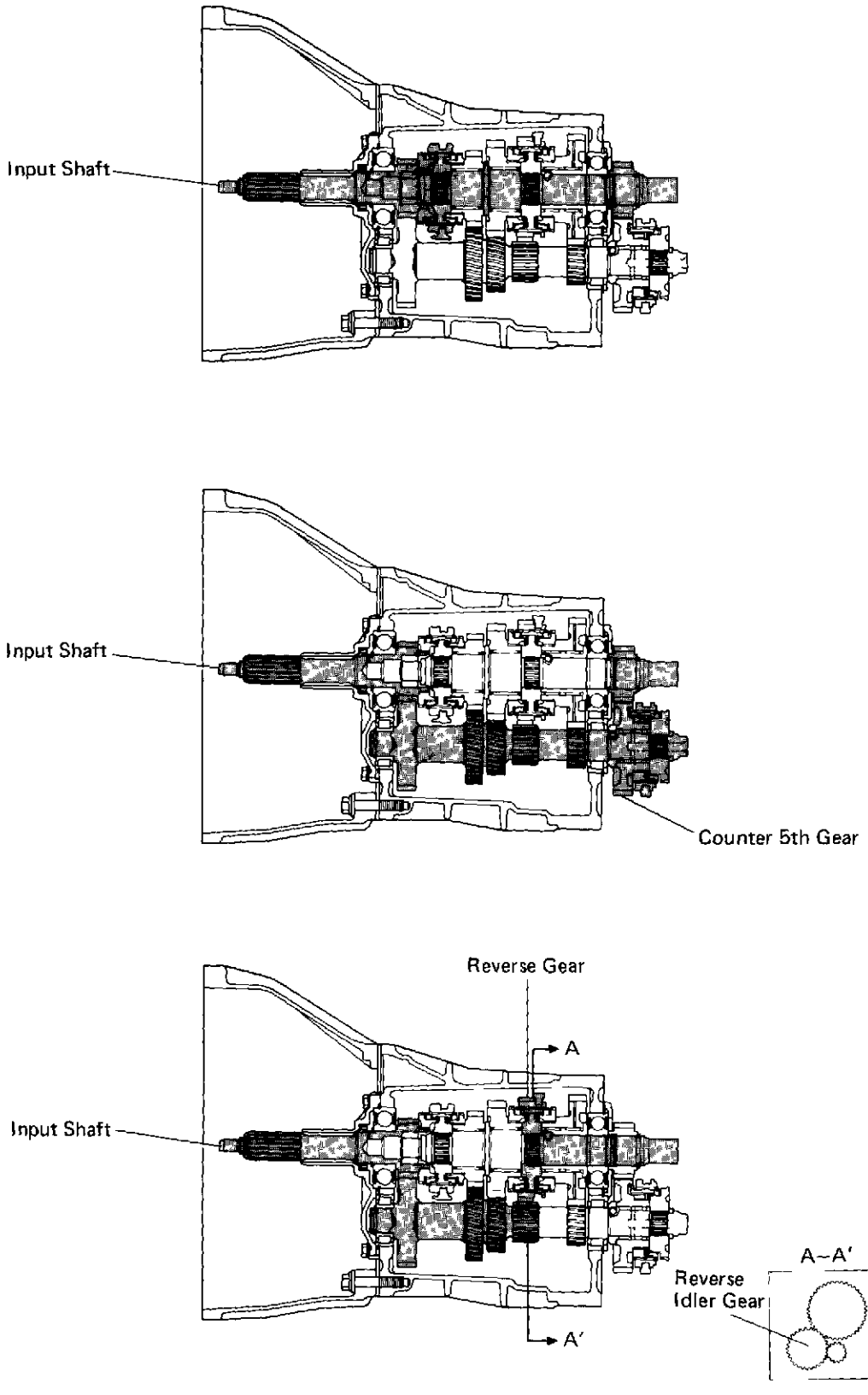

- The above illustration shows a G type transmission. The configuration of each gear is slightly different to W and R type transmissions but the gear engagements are the same.

MT0502 GM0443

PRECAUTIONS

When working with FIPG material, you must be observe the following.

- Using a razor blade and gasket scraper, remove all the old packing (FIPG) material from the gasket surfaces.
- Thoroughly clean all components to remove all the loose material.
- Clean both sealing surfaces with a non-residue solvent
- Apply the seal packing in approx. 1 mm (0.04 in.) bead along the sealing surface.
- Parts must be assembled within 10 minutes of application. Otherwise, the packing (FIPG) material must be removed and reapplied.

TROUBLESHOOTING

Problem	Possible cause	Remedy	Page
Hard to shift or will not shift	Splines on input shaft dirty or burred	Repair as necessary	MT-5
	Transmission faulty	Disassemble and inspect transmission	MT-5
Transmission jumps out of gear	Transmission faulty	Diassemble and inspect transmission	MT-5

REMOVAL AND INSTALLATION OF TRANSMISSION

COMPONENTS

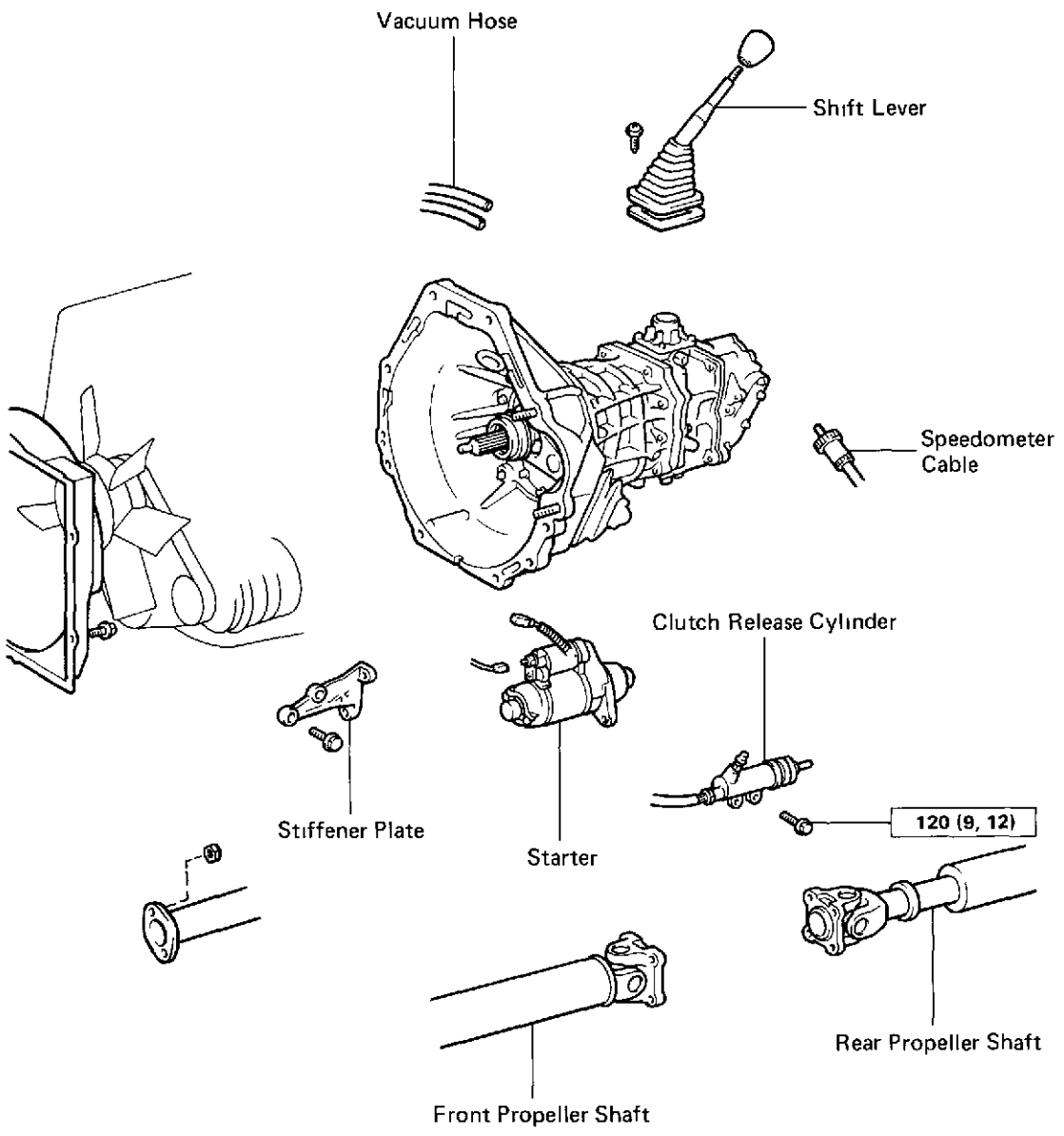

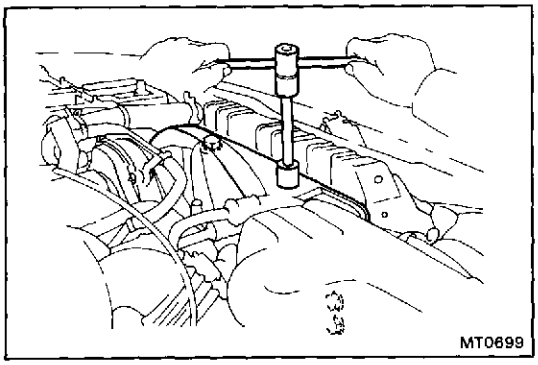
MT0699

REMOVAL OF TRANSMISSION

1. **DISCONNECT BATTERY CABLE FROM NEGATIV TERMINAL**

2. **LOOSEN FAN SHROUD OF THE COOLING FAN TO AVOI DAMAGE TO FAN**

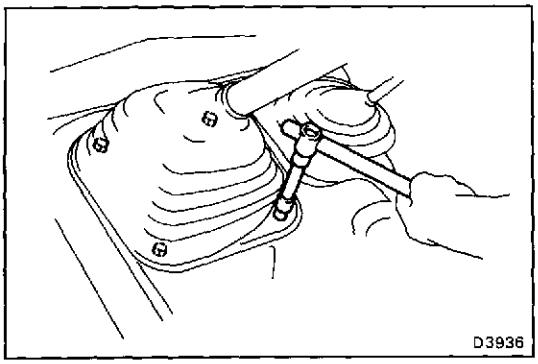
D3936

3. **REMOVE SHIFT LEVER**
   (a) Remove the four bolts and shift lever boot.

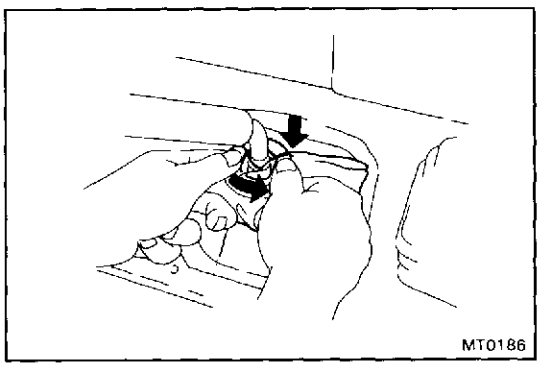
MT0186

   (b) Cover the shift lever cap with a cloth.
   (c) Then, pressing down on the shift lever cap, rotate counterclockwise to remove.
   (d) Remove the shift lever.

4. **RAISE VEHICLE**

5. **DISCONNECT PROPELLER SHAFT**
   (See page PR-2)

6. **REMOVE STIFFENER PLATE**
   Remove the four bolts and stiffener plate.

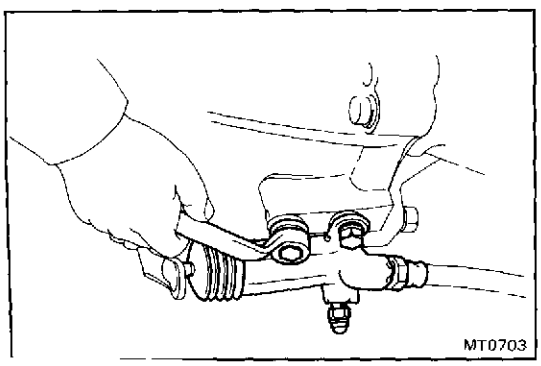
MT0703

7. **REMOVE CLUTCH RELEASE CYLINDER**
   Remove the two bolts and clutch release cylinder.

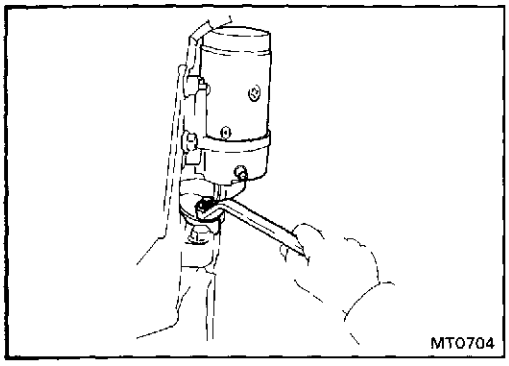

8. **REMOVE STARTER**

   Remove the bolt, nut and starter.

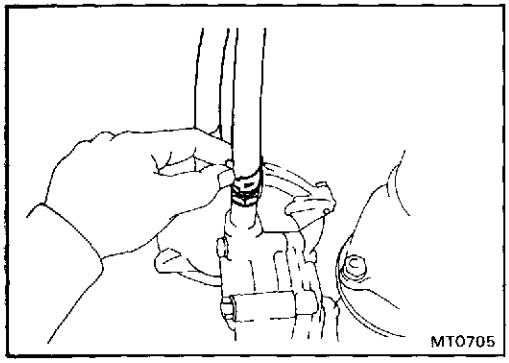

9. **(VACUUM SHIFT TYPE)**
   REMOVE VACUUM HOSE

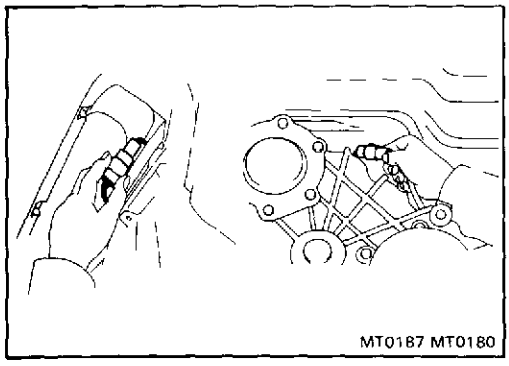

10. **REMOVE 4WD AND BACK-UP LIGHT SWITCH CONNECTOR**

11. **(VACUUM SHIFT TYPE)**
    REMOVE L4 SWITCH CONNECTOR

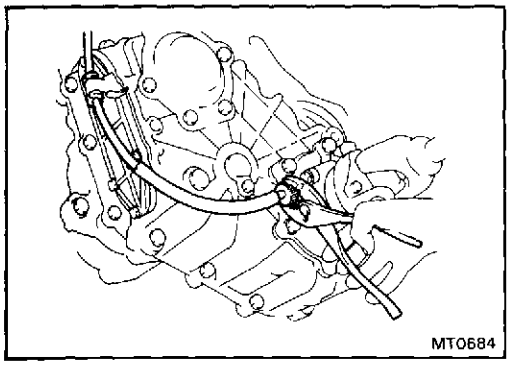

12. **REMOVE SPEEDOMETER CABLE**

    Using pliers, remove the speedometer cable.

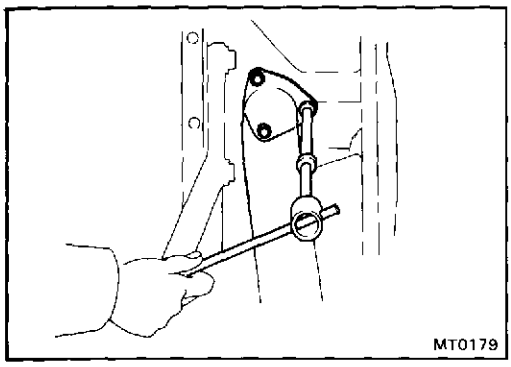

13. **REMOVE EXHAUST PIPE**

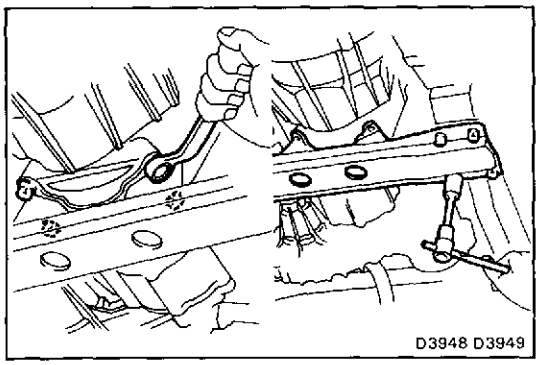

14. REMOVE CROSSMEMBER

Remove the eight bolts, two nuts and crossmember.

15. REMOVE REMAINING TRANSMISSION BOLTS

16. REMOVE TRANSMISSION

Remove transmission toward the rear.

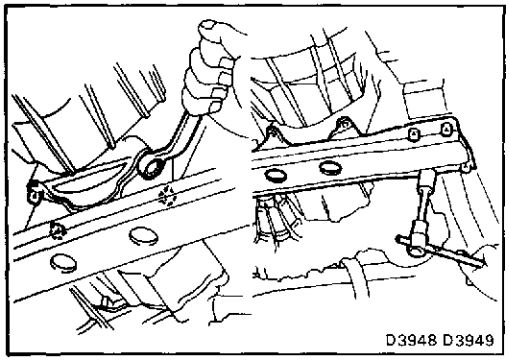
D3948 D3949

INSTALLATION OF TRANSMISSION

1. **INSTALL TRANSMISSION**

   Install and torque the bolts.

   Torque: 730 kg-cm (53 ft-lb, 27 N·m)

2. **INSTALL CROSSMEMBER**

   Install and torque the eight bolts and two nuts.

   Torque: bolt 400 kg-cm (29 ft-lb, 39 N·m)
   nut 600 kg-cm (43 ft-lb, 59 N·m)

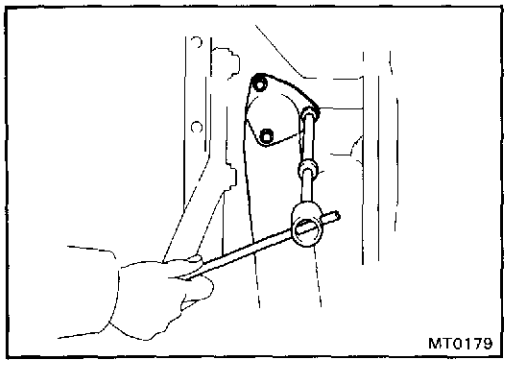
MT0179

3. **INSTALL EXHAUST PIPE**

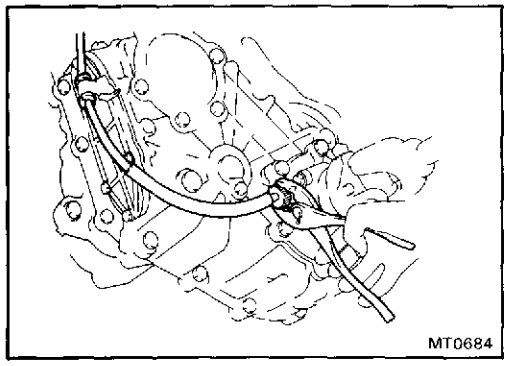
MT0684

4. **INSTALL SPEEDOMETER CABLE**

   Using pliers, install the speedometer cable.

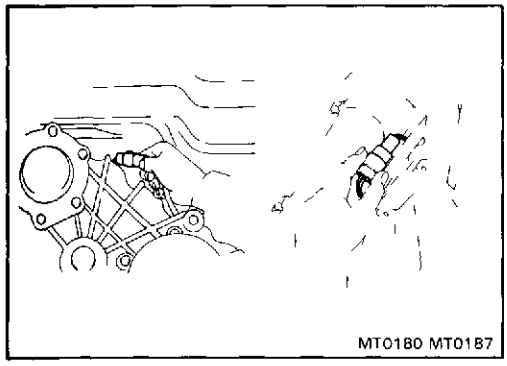
MT0180 MT0187

5. **(VACUUM SHIFT TYPE)**
   INSTALL L4 SWITCH CONNECTOR

6. **INSTALL 4WD AND BACK-UP LIGHT SWITCH**

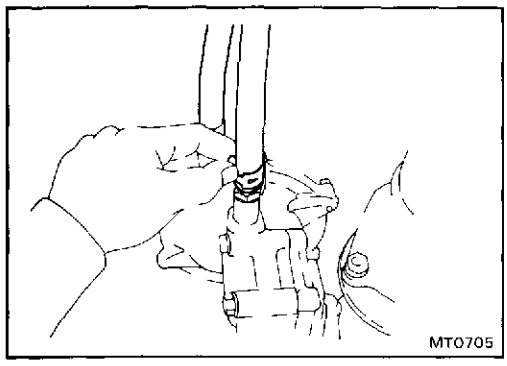
MT0705

7. **(VACUUM SHIFT TYPE)**
   INSTALL VACUUM HOSE

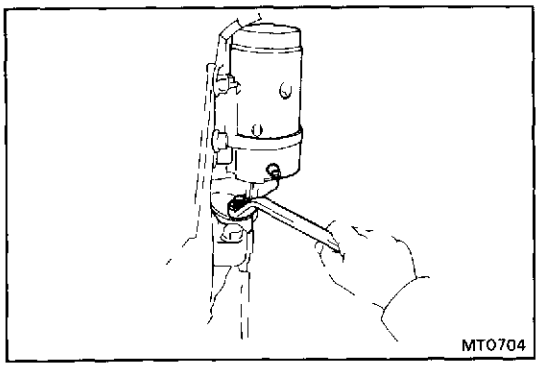
MT0704

8. INSTALL STARTER

Install the bolt, nut and starter.

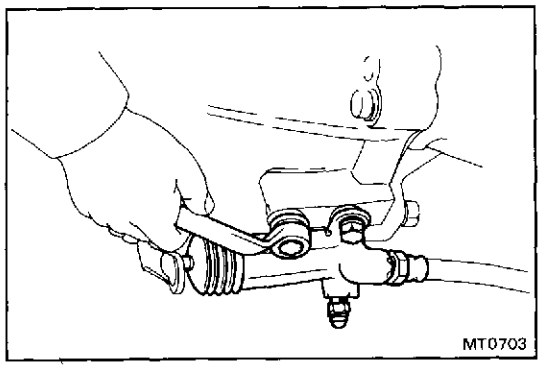
MT0703

9. REMOVE CLUTCH RELEASE CYLINDER

(a) Install the clutch release cylinder.

(b) Install and torque the two bolts.

Torque: 120 kg-cm (9 ft-lb, 12 N·m)

10. INSTALL STIFFENER PLATE

(a) Install the stiffener plate.

(b) Install and torque the four bolts.

Torque: 700 kg-cm (51 ft-lb, 69 N·m)

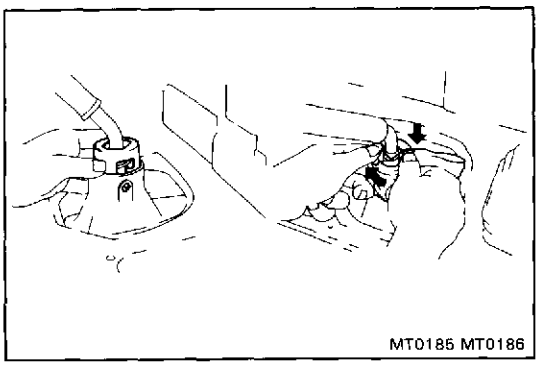
MT0185 MT0186

11. CONNECT PROPELLER SHAFT
(See page PR-2)

12. LOWER VEHICLE

13. INSTALL SHIFT LEVER

(a) Align the groove of the shift lever cap and the pin pa of the case cover.

(b) Cover the shift lever cap with a cloth.

(c) Then, pressing down on the shift lever cap, rotate clockwise to install.

(d) Install the shift lever boot with four bolts.

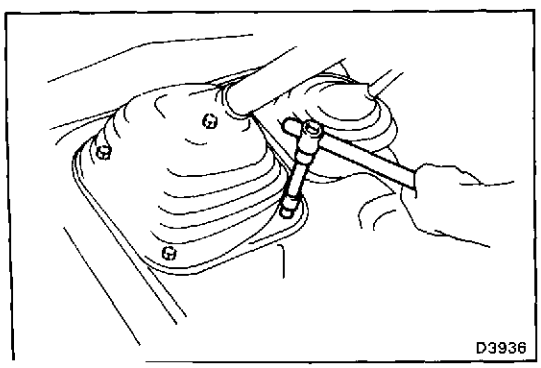
D3936

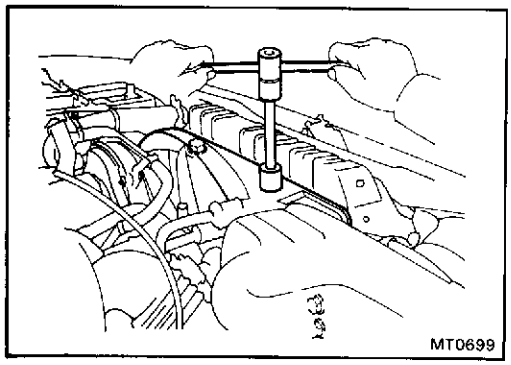

14. TIGHTEN FAN SHROUD SET BOLT

15. CONNECT BATTERY CABLE TO NEGATIVE TERMINAL

16. PERFORM ROAD TEST

Check for abnormal noise and smooth operation

(R141F, R150F, R151F TRANSMISSIONS) COMPONENTS

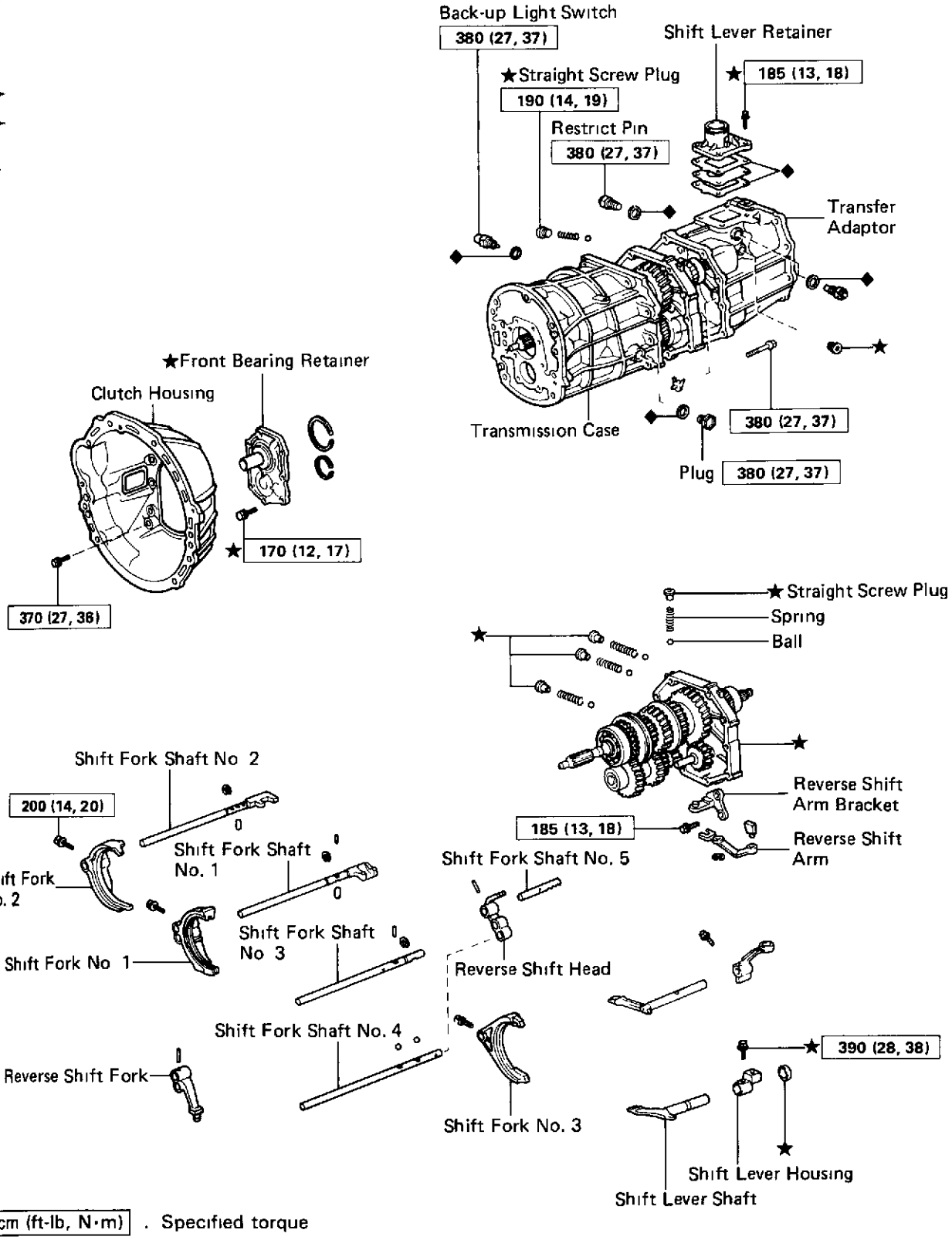

kg-cm (ft-lb, N·m) . Specified torque
♦ Non-reusable part
★ Precoated part

RM0330

Components (Cont'd)

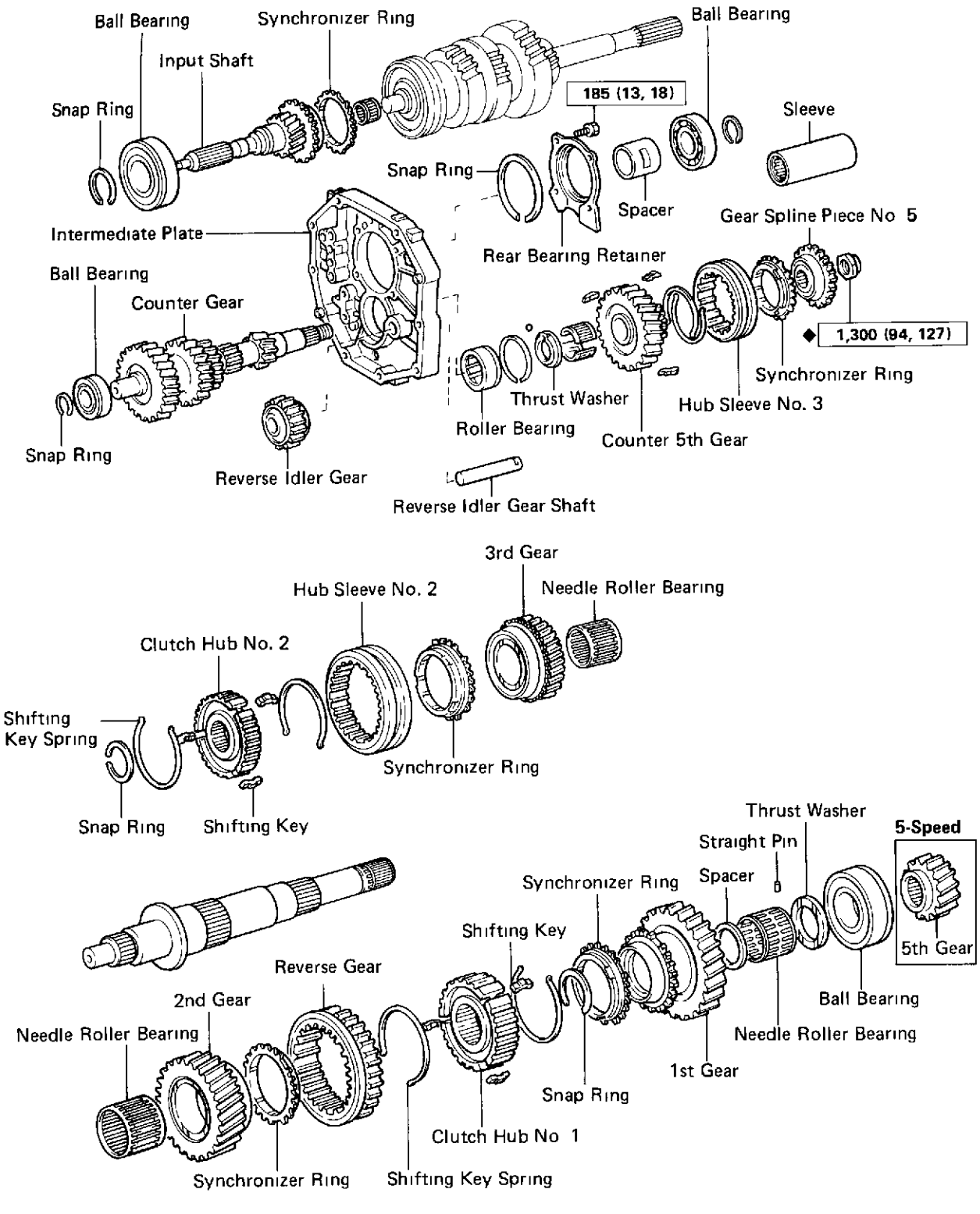

kg-cm (ft-lb, N·m) . Specified torque

◆ Non-reusable part

RM00

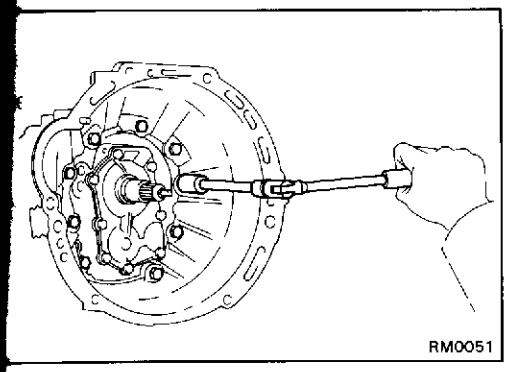
RM0051

DISASSEMBLY OF TRANSMISSION

(See pages MT-99, 100)

1. **REMOVE RELEASE FORK AND BEARING**

2. **REMOVE TRANSFER**
(See page TF-4)

3. **REMOVE BACK-UP LIGHT SWITCH, SHIFT LEVER RETAINER AND RESTRICT PINS**

4. **REMOVE CLUTCH HOUSING FROM TRANSMISSION CASE**

5. **REMOVE STRAIGHT SCREW PLUG, SPRING AND BALL**

(a) Using a torx socket wrench, remove the screw plug from the extension housing or transfer adaptor.
(Torx socket wrench T40 09042-00020)

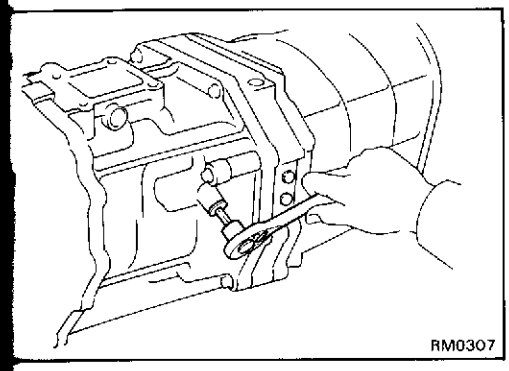
RM0307

(b) Using a magnetic finger, remove the spring and ball

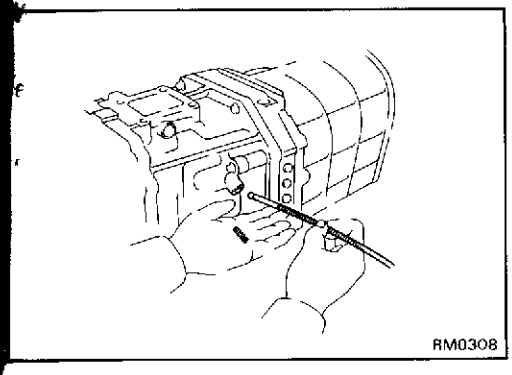
RM0308

6. **REMOVE TRANSFER ADAPTOR**

(a) Remove the shift lever housing set bolt.

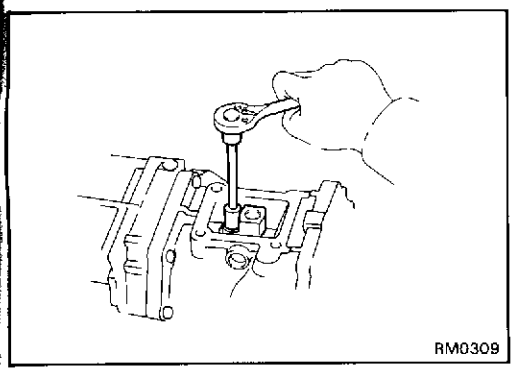
RM0309

(b) Remove the ten bolts.

(c) Using a plastic hammer, tap the transfer adaptor and remove the shift lever housing and shift and select lever.

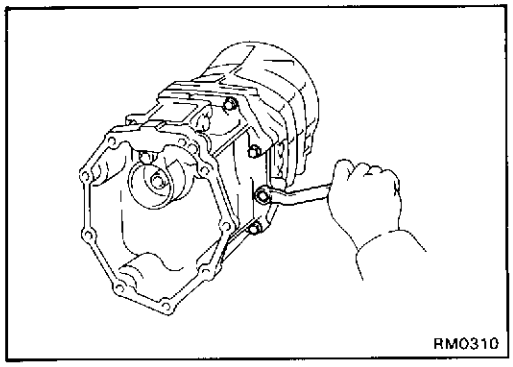
RM0310

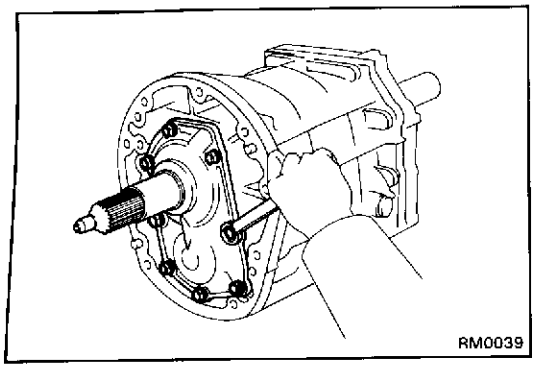

7. REMOVE FRONT BEARING RETAINER

(a) Remove the eight bolts.

(b) Using a plastic hammer, tap the front bearing retainer

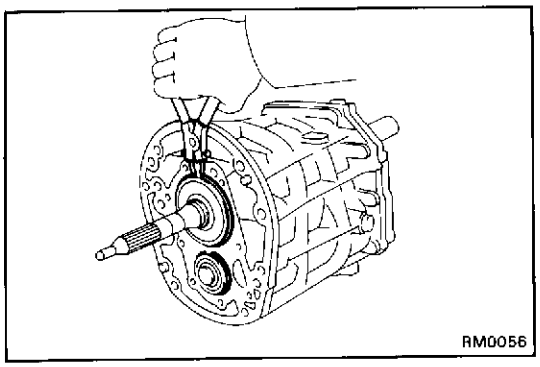

8. REMOVE BEARING SNAP RINGS

Using snap ring pliers, remove the two snap rings.

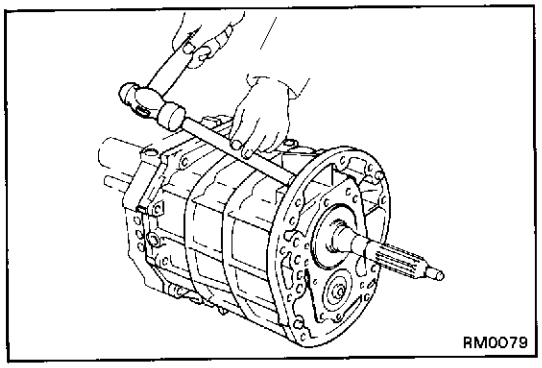

9. SEPARATE INTERMEDIATE PLATE FROM TRANSMISSION CASE

(a) Using a brass bar and hammer, carefully tap off the transmission case.

(b) Remove the transmission case from the intermediate plate.

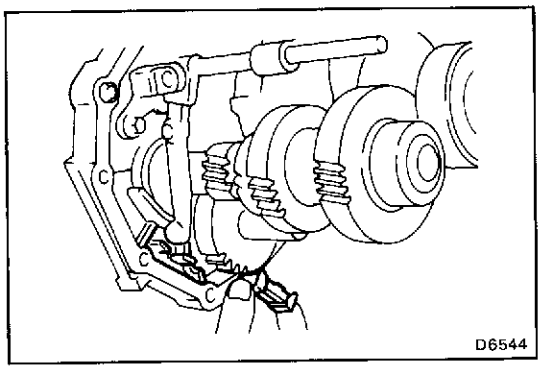

10. REMOVE MAGNET FROM INTERMEDIATE PLATE

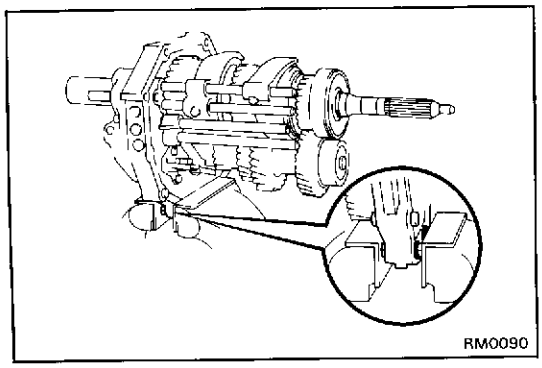

11. MOUNT INTERMEDIATE PLATE IN VISE

(a) Use two clutch housing bolts, plate washers and suitable nuts as shown.

NOTICE: Install the plate washers in reverse of normal. Increase or decrease plate washers so that the bolt tip and front tip surface of the nut are aligned.

(b) Mount the intermediate plate in a vise.

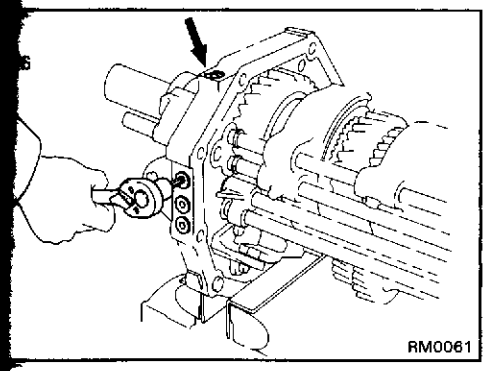

12. REMOVE STRAIGHT SCREW PLUGS, LOCKING BALLS AND SPRINGS

(a) Using a torx socket wrench, remove the four plugs.
(Torx socket wrench T40 09042-00020)

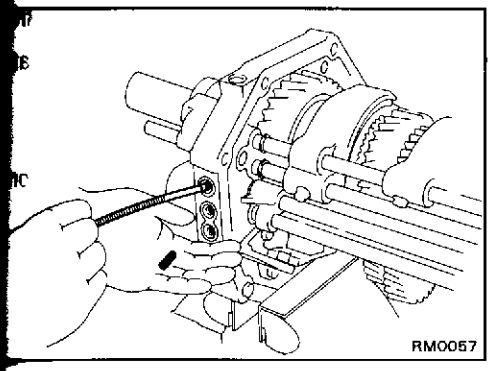

(b) (R150F and R151F)
Using a magnetic finger, remove the four springs and balls.

(R141F)
Using a magnetic finger, remove the three springs and balls.

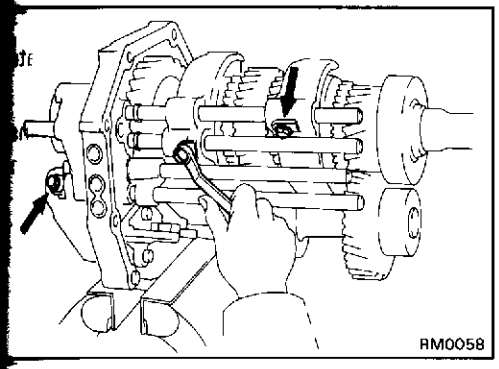

13. REMOVE SHIFT FORK SET BOLTS

(R150F and R151F)
Remove the three bolts.

(R141F)
Remove the two bolts.

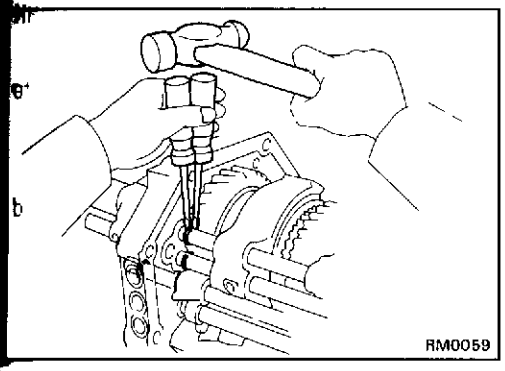

14. REMOVE SNAP RINGS

(R150F and R151F)
Using two screwdrivers and a hammer, remove the three snap rings.

(R141F)
Using two screwdrivers and a hammer, remove the six snap rings.

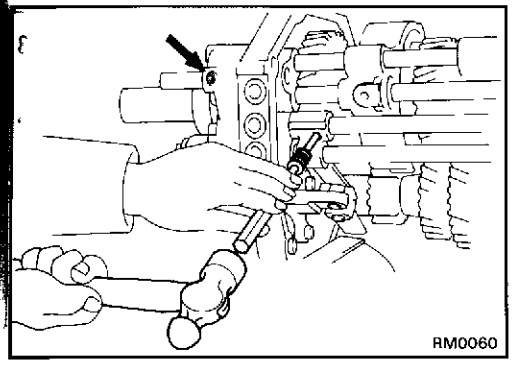

15. REMOVE SLOTTED SPRING PINS

Using a pin punch and hammer, drive out the two pins.

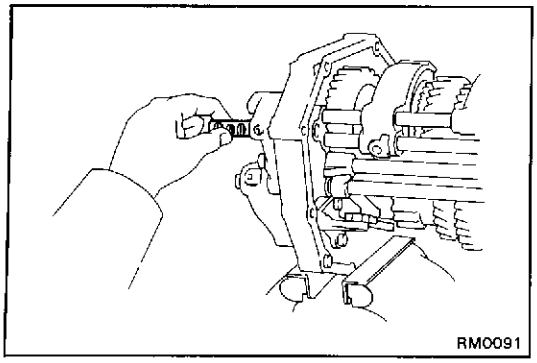

16. REMOVE SHIFT FORK SHAFT NO.5

Pull out shift fork shaft No.5 from the intermediate plate

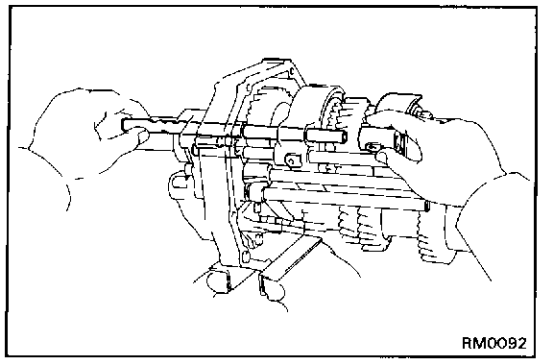

17. REMOVE SHIFT FORK SHAFT NO.2 AND SHIFT FORK

(a) Pull out shift fork shaft No 2 from the intermediate plate.

(b) Remove shift fork No.2.

(c) Using a magnetic finger, remove the interlock pin from the intermediate plate.

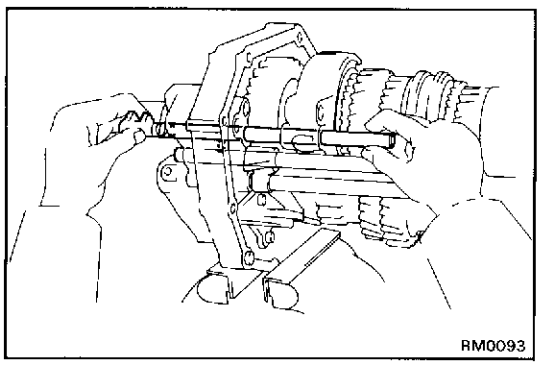

18. REMOVE SHIFT FORK SHAFT NO.1

(a) Pull out shift fork shaft No.1 from the intermediate plate.

(b) Using a magnetic finger, remove the interlock pins from the shaft hole and intermediate plate.

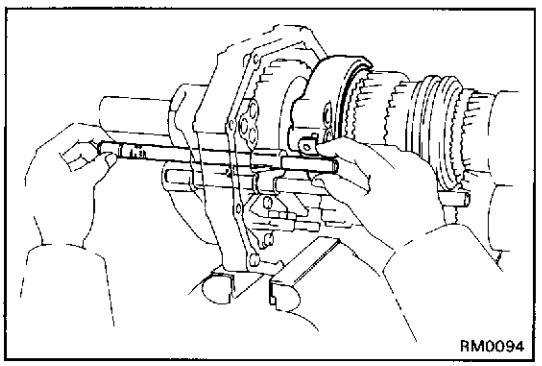

19. REMOVE SHIFT FORK SHAFT NO.3 AND SHIFT FORK NO.1

(a) Pull out shift fork shaft No.3 from the intermediate plate

(b) Remove shift fork No.1.

(c) Using a magnetic finger, remove the interlock pin and locking ball from the shaft hole and intermediate plate.

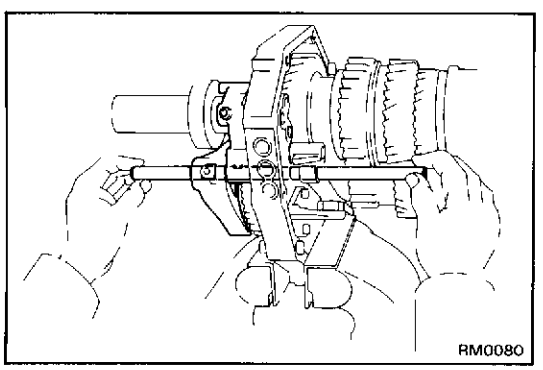

20. (R150F and R151F)
REMOVE SHIFT FORK SHAFT NO.4, SHIFT FORK NO.3 AND REVERSE SHIFT HEAD

(a) Pull out shift fork shaft No.4 from the intermediate plate.

(b) Remove the reverse shift head and locking ball.

(c) Remove shift fork No.3.

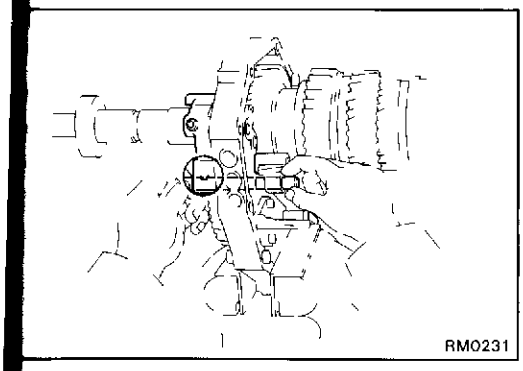

(R141F)

REMOVE SHIFT FORK SHAFT NO.4 AND REVERSE SHIFT HEAD

(a) Pull out shift fork shaft No 4 from the intermediate plate.

(b) Remove the reverse shift head and locking ball.

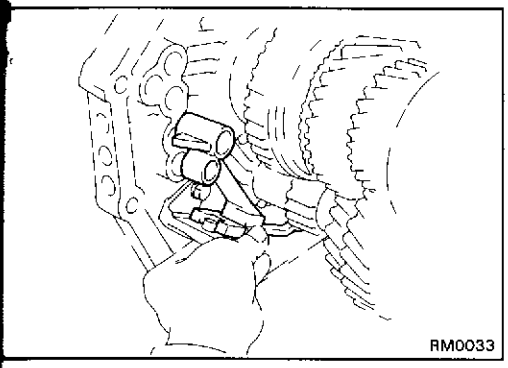

21. REMOVE REVERSE SHIFT ARM FROM REVERSE SHIFT ARM BRACKET

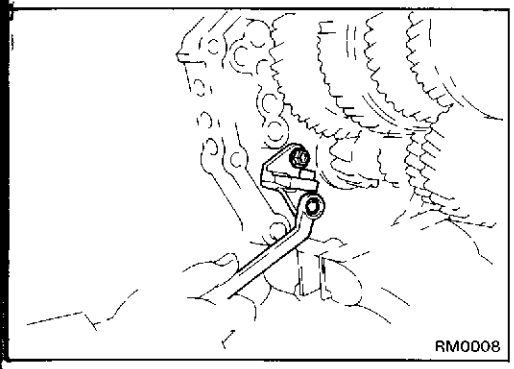

22. REMOVE REVERSE SHIFT ARM BRACKET

Remove the two bolts and the reverse shift arm bracket.

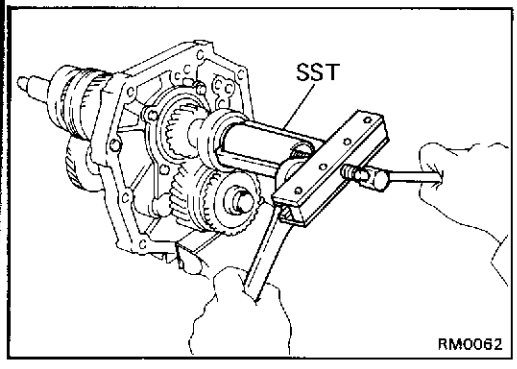

23. REMOVE SLEEVE FROM OUTPUT SHAFT

Using SST, remove the sleeve from the output shaft.

SST 09213-36020

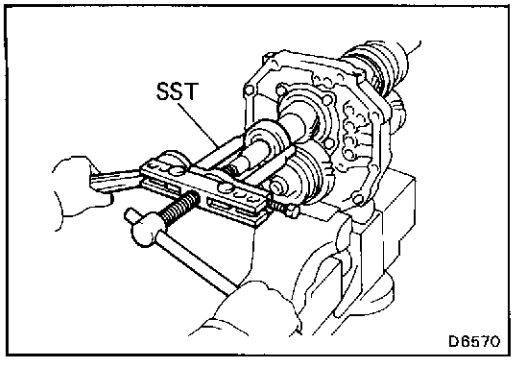

24. REMOVE OUTPUT SHAFT REAR BEARING

(a) Using two screwdrivers and a hammer, tap out the snap ring

(b) Using SST, remove the rear bearing.

SST 09950-20017

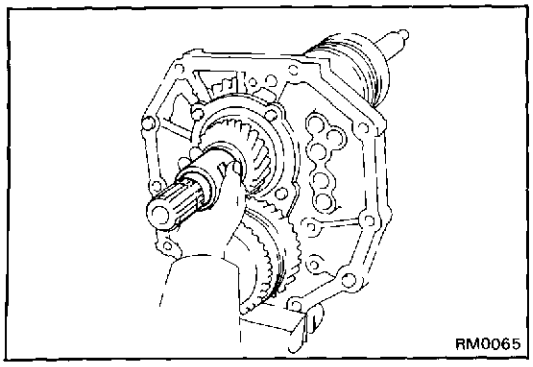

25. REMOVE SPACER

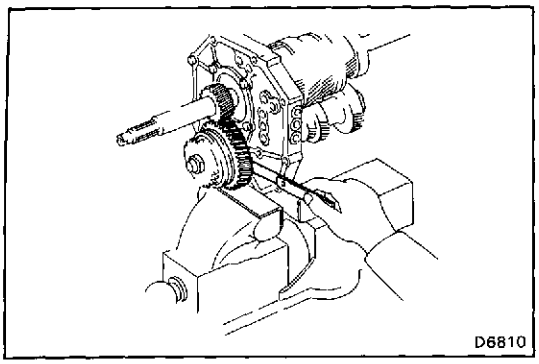

26. MEASURE COUNTER FIFTH GEAR THRUST CLEARANCE

Using a feeler gauge, measure the counter 5th gear thrust clearance.

Standard clearance: **0.10 — 0.35 mm (0.0039 — 0.0138 in.)**

Maximum clearance: **0.40 mm (0.0157 in.)**

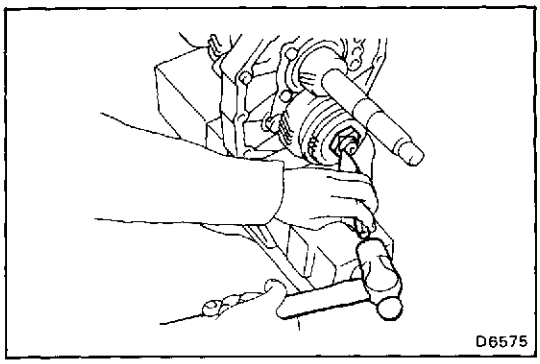

27. REMOVE GEAR SPLINE PIECE NO.5, SYNCHRONIZER RING, NEEDLE ROLLER BEARING AND COUNTER FIFTH GEAR WITH HUB SLEEVE NO.3

(a) Engage the gear double meshing.

(b) Using a hammer and chisel, loosen the staked part of the nut.

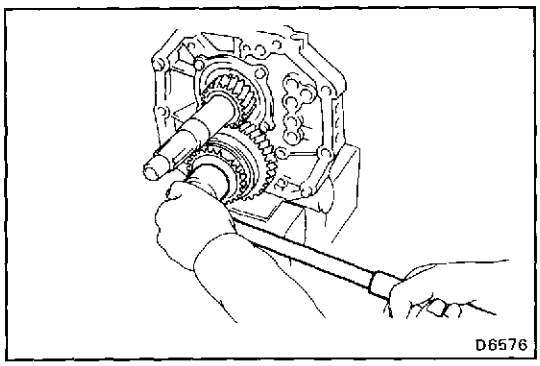

(c) Remove the lock nut.

(d) Disengage the gear double meshing.

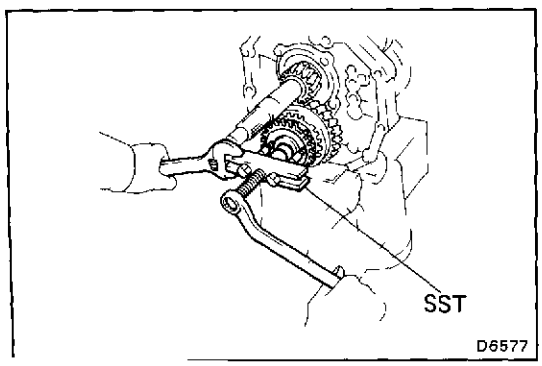

(e) Using SST, remove gear spline piece No.5.

SST 09213-31021

(f) Remove the counter 5th gear with hub sleeve No.

28. REMOVE SHIFTING KEYS AND SPRINGS FROM 5TH GEAR AND HUB SLEEVE NO.3

Using a screwdriver, remove the three shifting keys and two springs.

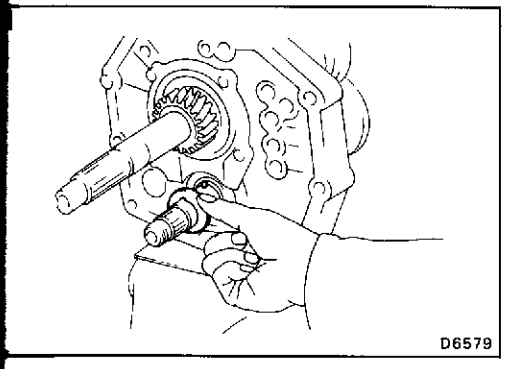
D6579

29. REMOVE THRUST WASHER AND BALL

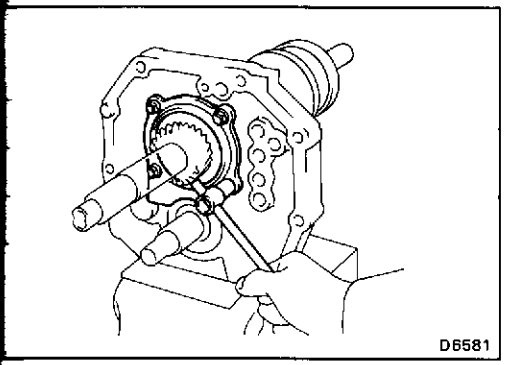
D6581

30. REMOVE REAR BEARING RETAINER

Remove the four bolts and rear bearing retainer.

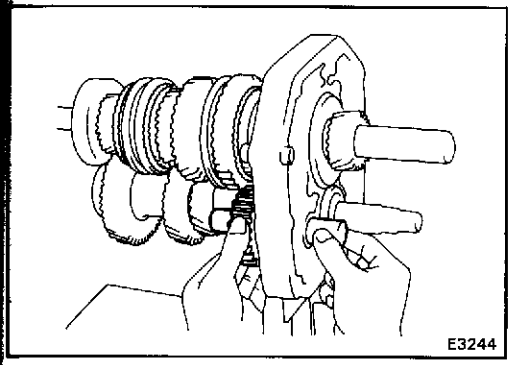
E3244

31. REMOVE REVERSE IDLER GEAR AND SHAFT

Pull out the shaft toward the rear.

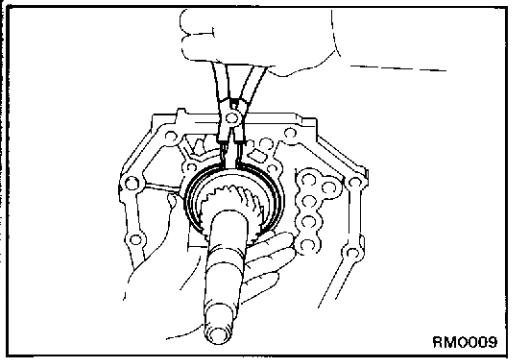
RM0009

32. REMOVE BEARING SNAP RING

Using snap ring pliers, remove the snap ring.

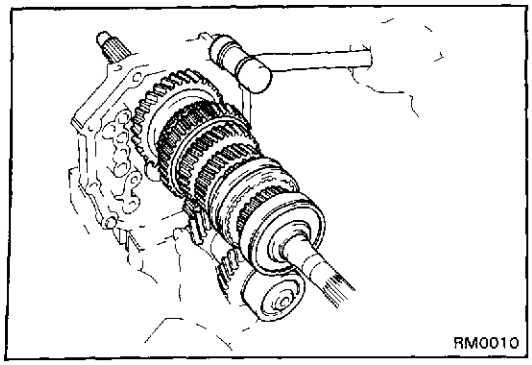

33. REMOVE OUTPUT SHAFT, COUNTER GEAR AND INPUT SHAFT AS A UNIT FROM INTERMEDIATE PLATE

(a) Remove the output shaft, counter gear and input shaft as a unit from the intermediate plate by pulling on the counter gear and tapping on the intermediate plate with a plastic hammer.

(b) Remove the input shaft with the needle roller bearing from the output shaft.

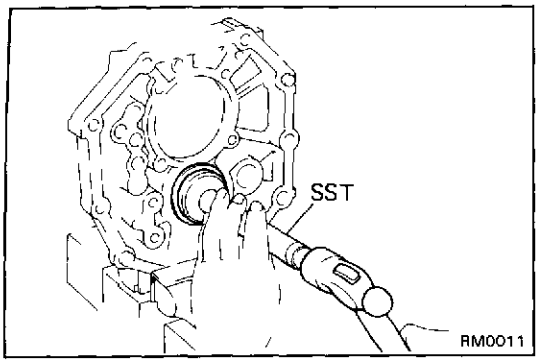

34. REMOVE COUNTER REAR BEARING FROM INTERMEDIATE PLATE

Using SST, remove the counter rear bearing.

SST 09608-12010 (09608-00020, 09608-00050)

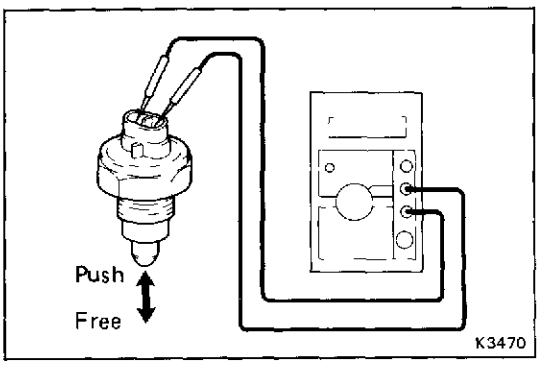

35. INSPECT BACK-UP LIGHT SWITCH

Check that there is continuity between terminals.

Switch Position	Specified
Push	Continuity
Free	No continuity

If operation is as specified replace switch.

COMPONENT PARTS

Input Shaft Assembly

COMPONENTS

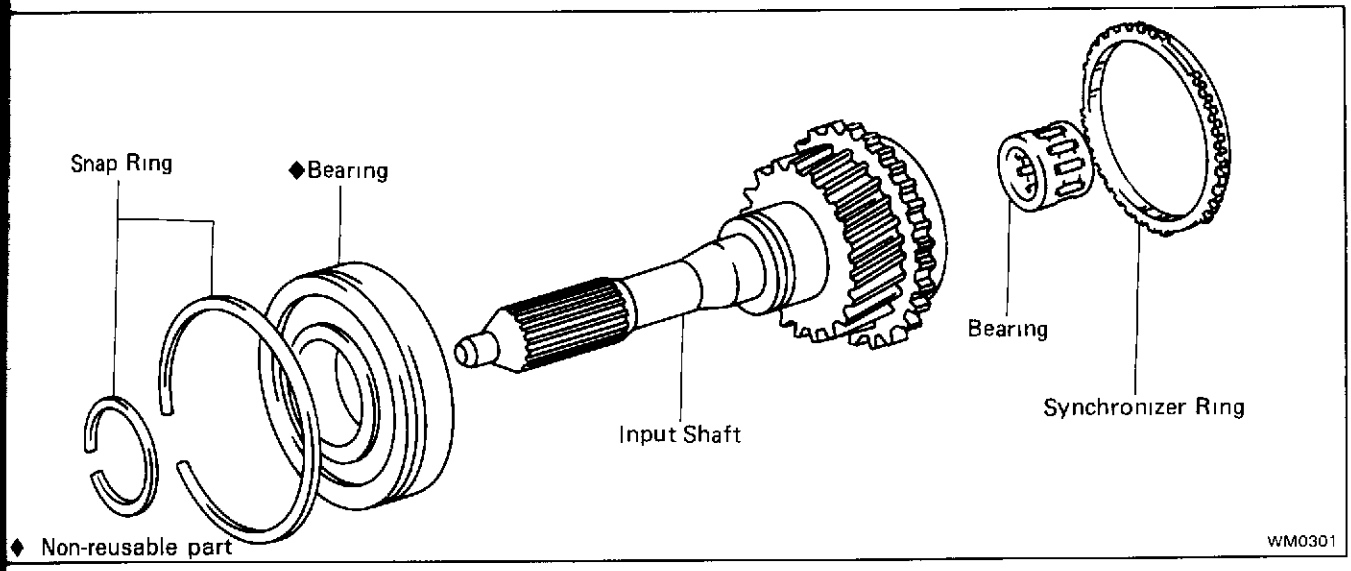

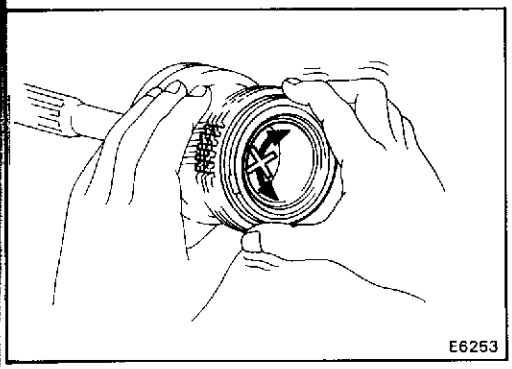

INSPECTION OF INPUT SHAFT

INSPECT SYNCHRONIZER RING

(a) Turn the ring and push it into check the braking action.

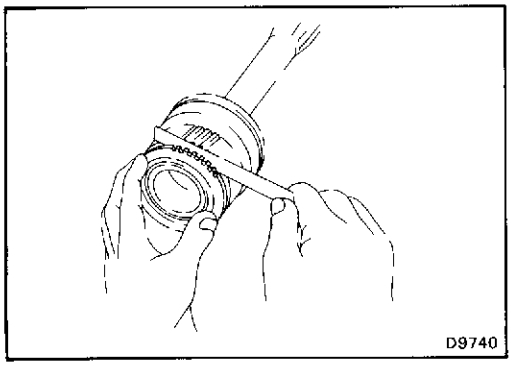

(b) Measure the clearance between the synchronizer ring back and the gear spline end.

Standard clearance: **0.8 — 1.6 mm (0.031 — 0.063 in.)**

Minimum clearance: **0.6 mm (0.024 in.)**

If the clearance is minimum or less, replace the synchronizer ring.

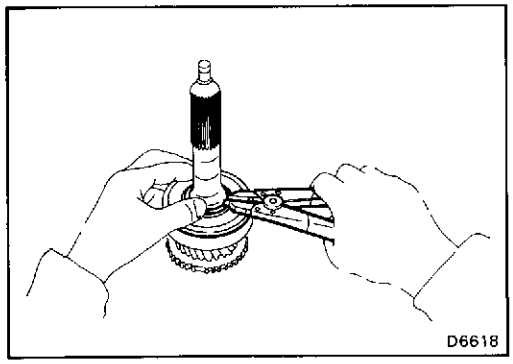

REPLACEMENT OF BEARING

IF NECESSARY, REPLACE INPUT SHAFT BEARING

(a) Using snap ring pliers, remove the snap ring.

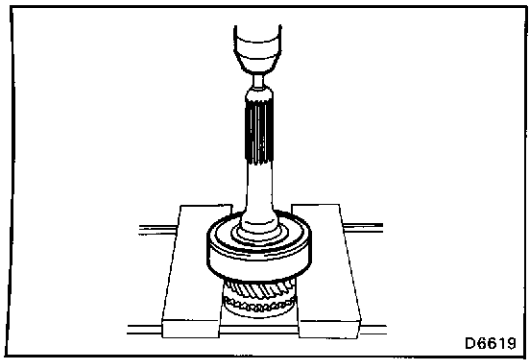

(b) Using a press, remove the bearing.

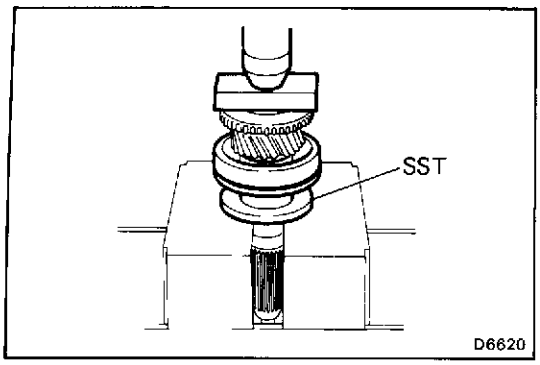

(c) Using a press and SST, install a new bearing.

SST 09506-35010

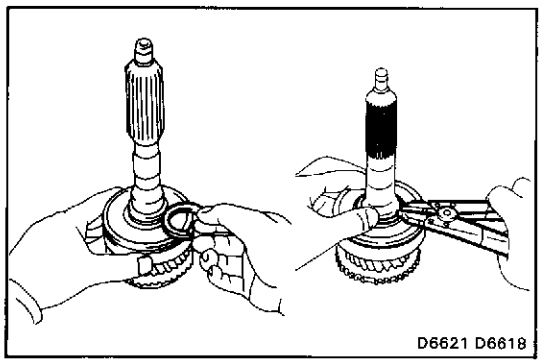

(d) Select a snap ring that will allow minimum axial play and install it on the shaft.

Mark	Thickness mm (in.)
A	2.10 – 2 15 (0.0827 – 0 0846)
B	2.15 – 2.20 (0.0846 – 0 0866)
C	2.20 – 2 25 (0 0866 – 0.0886)
D	2.25 – 2 30 (0.0886 – 0.0906)
E	2.30 – 2.35 (0.0906 – 0.0925)
F	2.35 – 2.40 (0 0925 – 0.0945)
G	2.40 – 2.45 (0.0945 – 0 0965)

Output Shaft Assembly

COMPONENTS

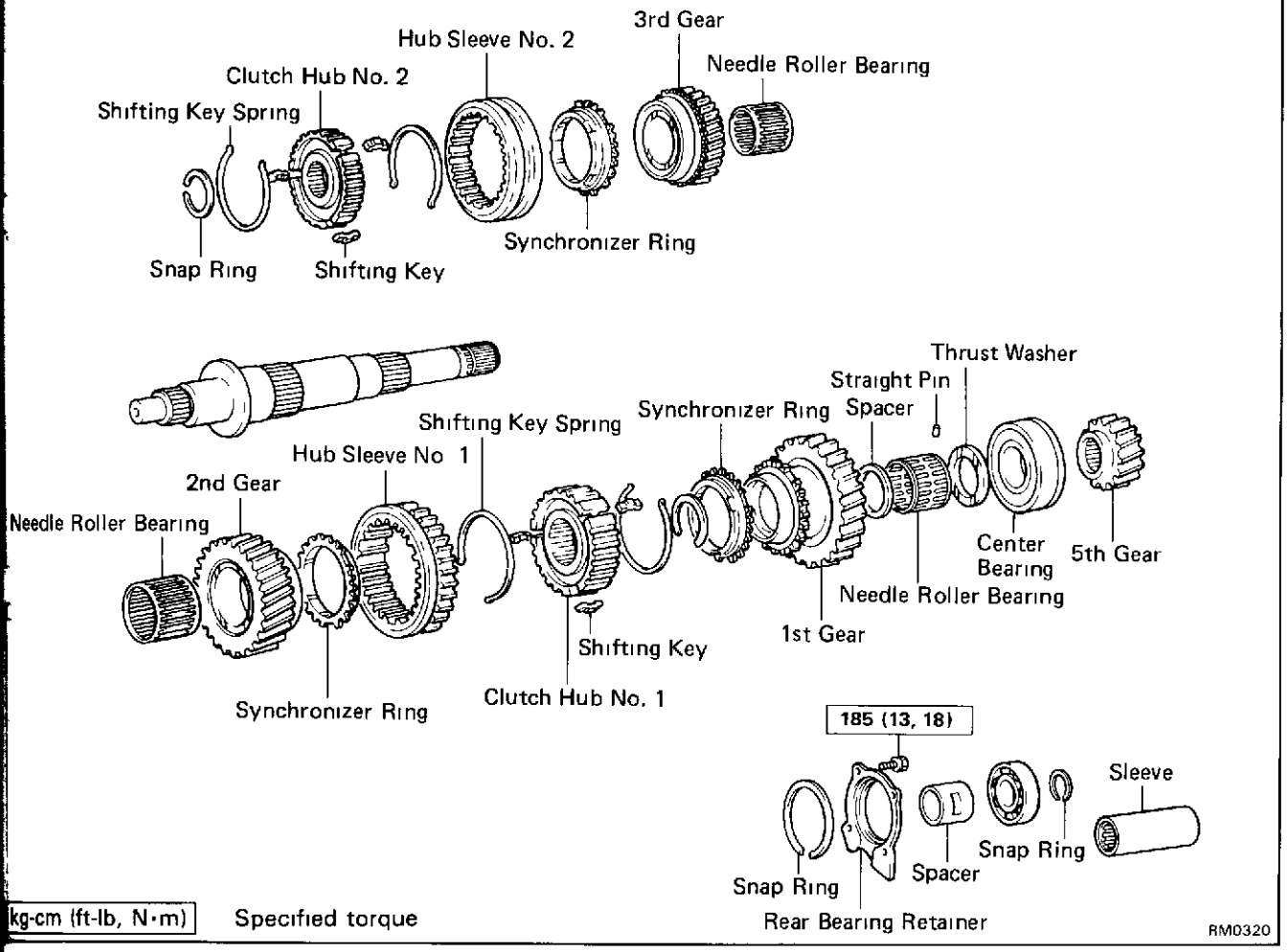

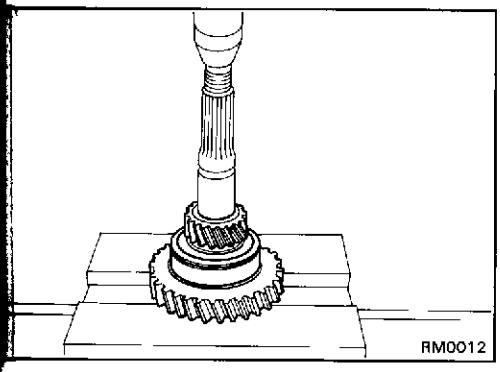

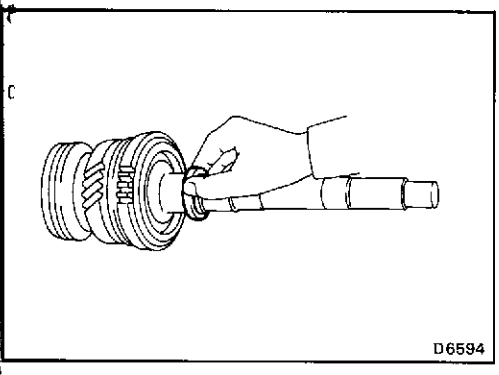

DISASSEMBLY OF OUTPUT SHAFT ASSEMBLY

1. **REMOVE FIFTH GEAR, CENTER BEARING AND FIRST GEAR ASSEMBLY**
   (a) Using a press, remove the 5th gear, center bearing, thrust washer and 1st gear.
   (b) Remove the synchronizer ring.
   (c) Remove the straight pin and needle roller bearing.
   (d) Remove the spacer

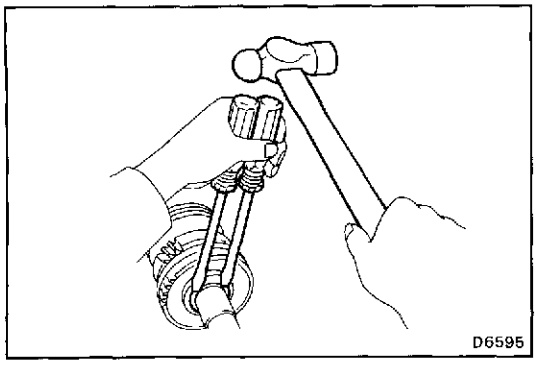

2. REMOVE HUB SLEEVE NO.1 ASSEMBLY AND SECOND GEAR ASSEMBLY

(a) Using two screwdrivers and a hammer, tap out the snap ring.

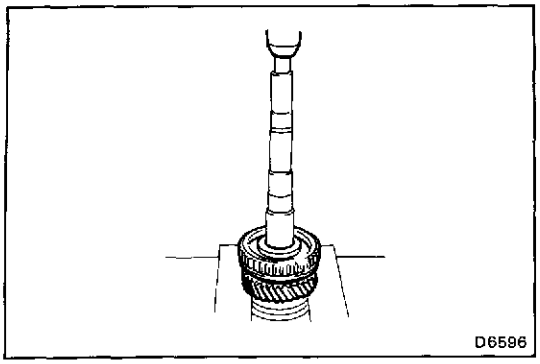

(b) Using a press, remove hub sleeve No.1, synchronizer ring and 2nd gear.

(c) Remove the needle roller bearing.

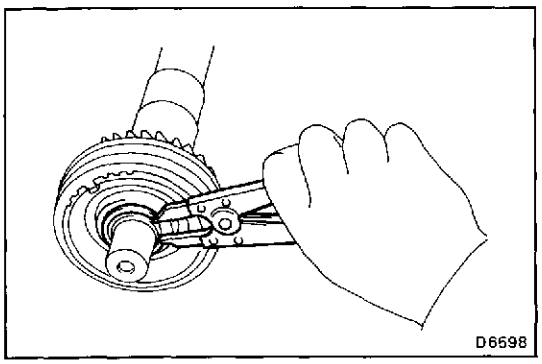

3. REMOVE HUB SLEEVE NO.2 ASSEMBLY AND THIRD GEAR ASSEMBLY

(a) Using snap ring pliers, remove the snap ring.

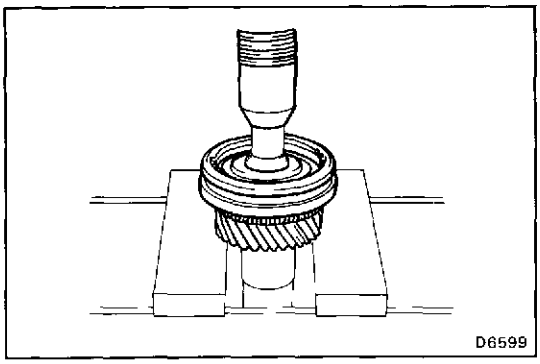

(b) Using a press, remove hub sleeve No.2, synchronizer ring and 3rd gear.

(c) Remove the needle roller bearing.

4. REMOVE SHIFTING KEYS AND SPRINGS FROM HU SLEEVE ASSEMBLY

Using screwdriver, remove the three shifting keys and tw springs

HINT Hub sleeve No.1 and hub sleeve No.2.

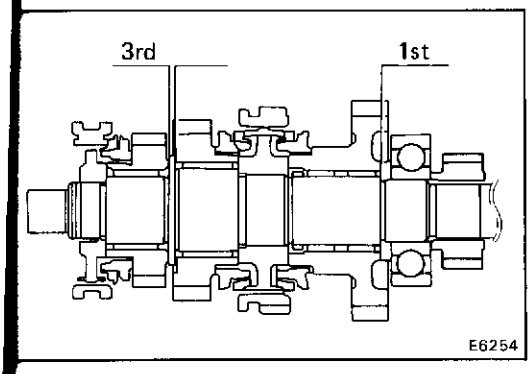

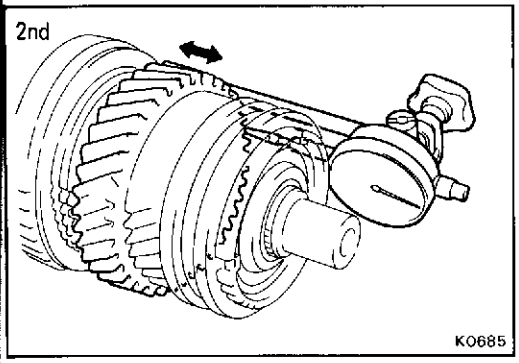

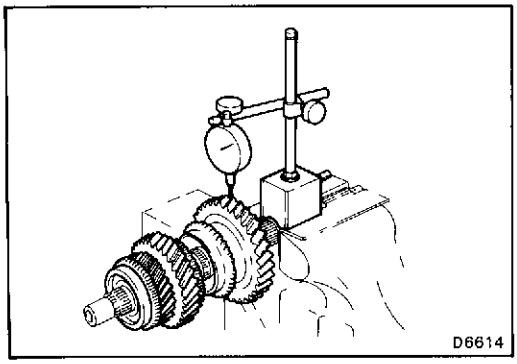

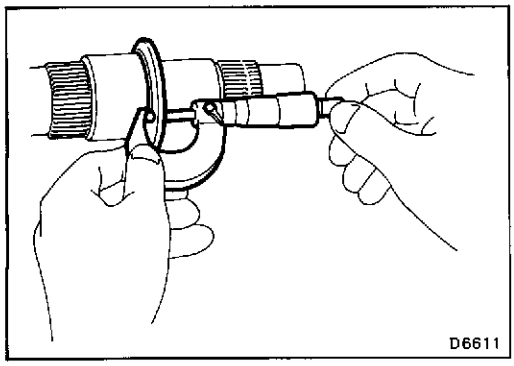

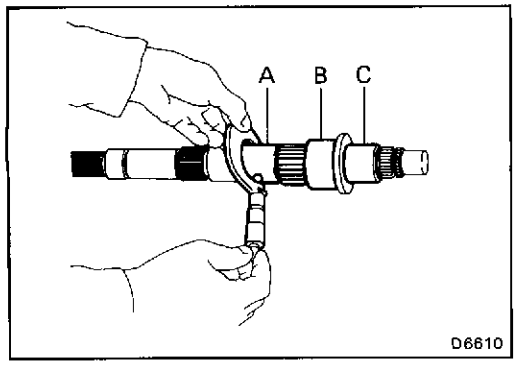

INSPECT OF OUTPUT SHAFT ASSEMBLY

1. MEASURE EACH GEAR THRUST CLEARANCE

(a) Using a feeler gauge, measure the thrust clearance of 1st gear and 3rd gear.

1st gear

Standard clearance:	**0.10 — 0.45 mm (0.0039 — 0.0177 in.)**
Maximum clearance:	**0.55 mm (0.0197 in.)**

3rd gear

Standard clearance:	**0.10 — 0.25 mm (0.0039 — 0.0098 in.)**
Maximum clearance:	**0.30 mm (0.0118 in.)**

(b) Using a dial indicator, measure the thrust clearance of 2nd gear.

2nd gear

Standard clearance:	**0.10 — 0.25 mm (0.0039 — 0.0098 in.)**
Maximum clearance:	**0.30 mm (0.0118 in.)**

2. CHECK OIL CLEARANCE OF EACH GEAR

Using a dial indicator, measure the oil clearance between the gear and shaft with the needle roller bearing installed.

Standard clearance:

1st gear	**0.020 — 0.073 mm (0.0008 — 0.0029 in.)**
2nd and 3rd gears	**0.015 — 0.068 mm (0.0006 — 0.0027 in.)**
Maximum clearance:	**0.16 mm (0.0063 in.)**

If the clearance more than the limit, replace the gear needle roller bearing or shaft

3. INSPECT OUTPUT SHAFT

(a) Using a micrometer, measure the output shaft flange thickness.

Minimum thickness: 4.70 mm (0.1850 in.)

(b) Using a micrometer, measure the outer diameter of the output shaft journal.

Minimum diameter:

A	**1st gear**	**38.860 mm (1.5299 in.)**
B	**2nd gear**	**46.860 mm (1.8449 in.)**
C	**3rd gear**	**37.860 mm (1.4905 in.)**

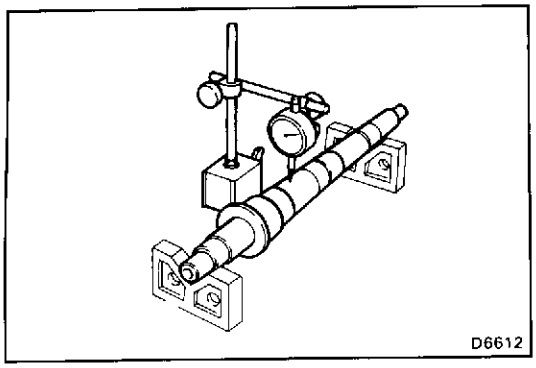

(c) Using a dial indicator, check the shaft runout.

Maximum runout: 0.06 mm (0.0024 in.)

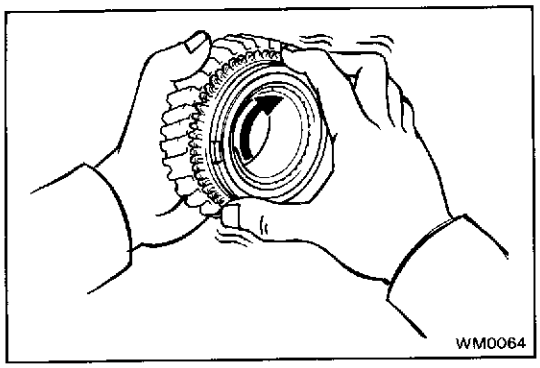

4. INSPECT SYNCHRONIZER RINGS

(a) Turn the ring and push it into check the braking action

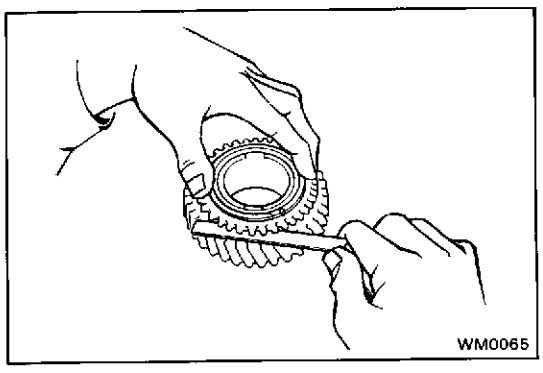

(b) Measure the clearance between the synchronizer ring back and the gear spline end.

Standard clearance: 0.8 — 1.6 mm (0.013 — 0.063 in.)

Minimum clearance: 0.6 mm (0.024 in.)

If the clearance is less than the limit, replace the synchronizer ring.

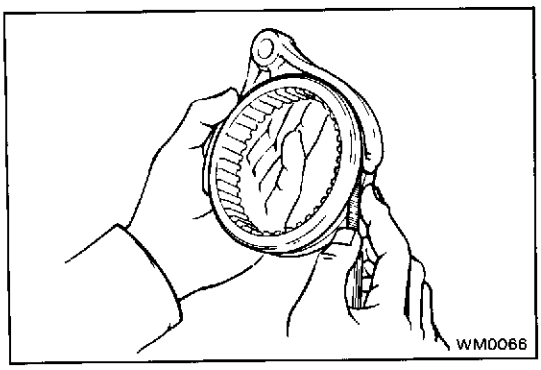

5. MEASURE CLEARANCE OF SHIFT FORKS AND HUB SLEEVES

Using a feeler gauge, measure the clearance between the hub sleeve and shift fork.

Maximum clearance: 1.0 mm (0.039 in.)

If the clearance more than the limit, replace the shift fork or hub sleeve.

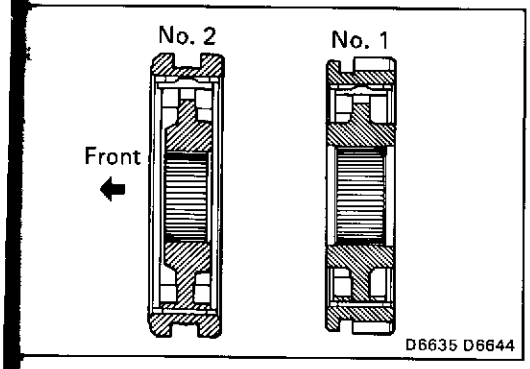

ASSEMBLY OF OUTPUT SHAFT ASSEMBLY

1. INSERT CLUTCH HUB NO.1 AND NO.2 INTO HUB SLEEVE

(a) Install the clutch hub and shifting keys to the hub sleeve.

(b) Install the shifting key springs under the shifting keys.

NOTICE: Install the key springs positioned so that their end gaps are not in line.

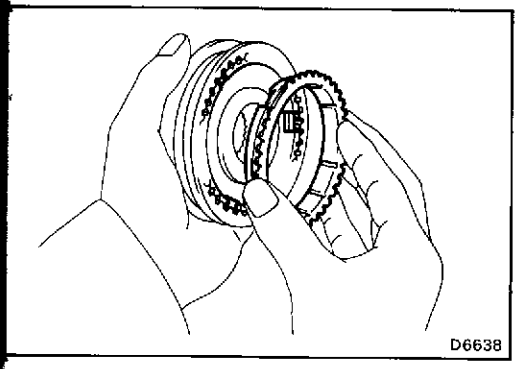

2. INSTALL THIRD GEAR AND HUB SLEEVE NO.2 ON OUTPUT SHAFT

(a) Apply gear oil to the shaft and needle roller bearing.

(b) Place the synchronizer ring on the gear and align the ring slots with the shifting keys.

(c) Install the needle roller bearing in the 3rd gear.

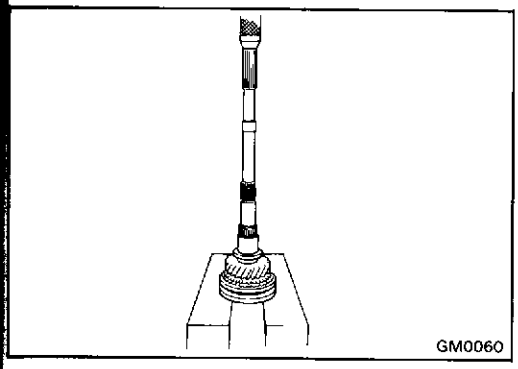

(d) Using a press, install the 3rd gear and hub sleeve No.2.

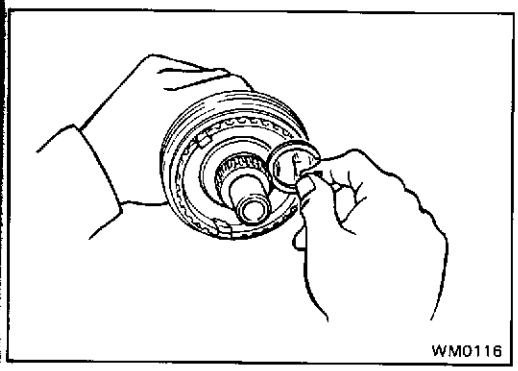

3. INSTALL SNAP RING

(a) Select a snap ring that will allow minimum axial play.

Mark	Thickness mm (in)
A	1 80 — 1.85 (0.0709 — 0.0728)
B	1 85 — 1.90 (0.0728 — 0.0748)
C	1.90 — 1 95 (0.0748 — 0.0768)
D	1.95 — 2.00 (0.0768 — 0.0787)
E	2.00 — 2.05 (0.0787 — 0 0807)
F	2.05 — 2.10 (0 0807 — 0 0827)
G	2 10 — 2.15 (0 0827 — 0.0846)

(b) Using snap ring pliers, install the snap ring.

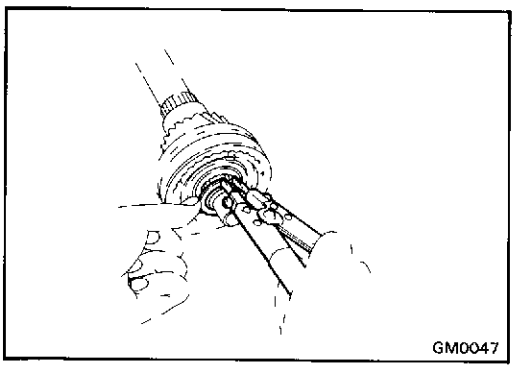

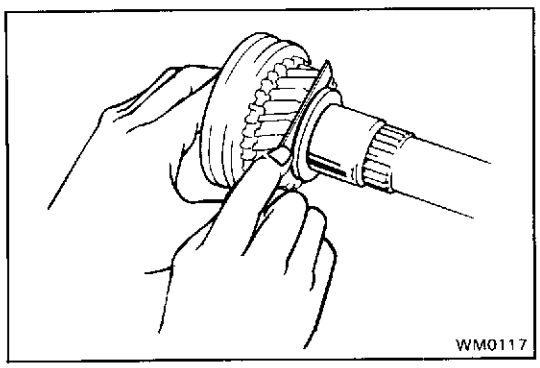

4. MEASURE THIRD GEAR THRUST CLEARANCE

Using a feeler gauge, measure the 3rd gear thrust clearance.

Standard clearance: 0.10 – 0.25 mm (0.0039 – 0.0098 in.)

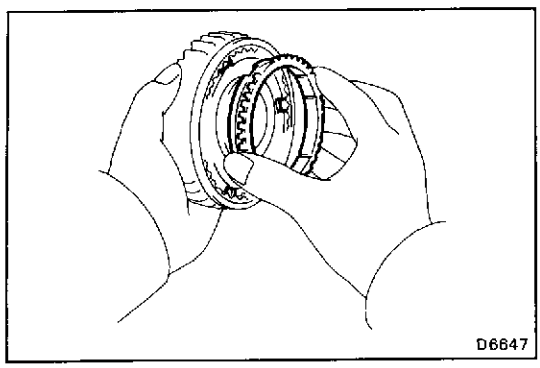

5. INSTALL SECOND GEAR AND NO.1 HUB SLEEVE

(a) Apply gear oil to the shaft and needle roller bearing.

(b) Place the synchronizer ring on the gear and align the ring slots with the shifting keys.

(c) Install the needle roller bearing in the 2nd gear.

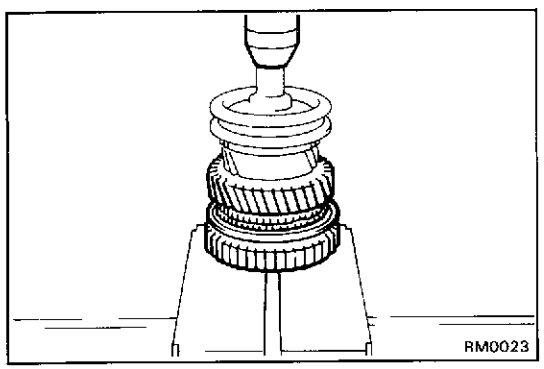

(d) Using a press, install the 2nd gear and hub sleeve No.1.

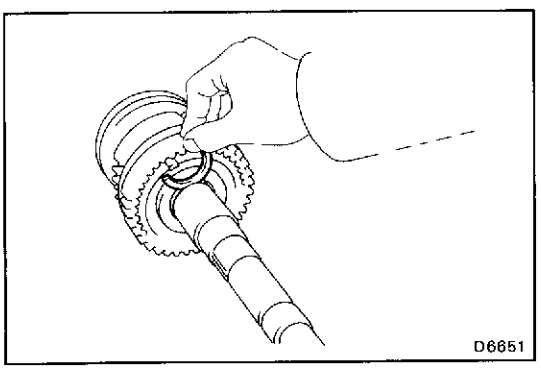

6. INSTALL SNAP RING

(a) Select a snap ring that will allow minimum axial play

Mark	Thickness mm (in.)
A	2.30 – 2.35 (0.0906 – 0.0925)
B	2.35 – 2.40 (0.0925 – 0.0945)
C	2.40 – 2.45 (0.0945 – 0.0965)
D	2.45 – 2.50 (0.0965 – 0.0984)
E	2.50 – 2.55 (0.0984 – 0.1004)
F	2.55 – 2.60 (0.1004 – 0.1024)
G	2.60 – 2.65 (0.1024 – 0.1043)

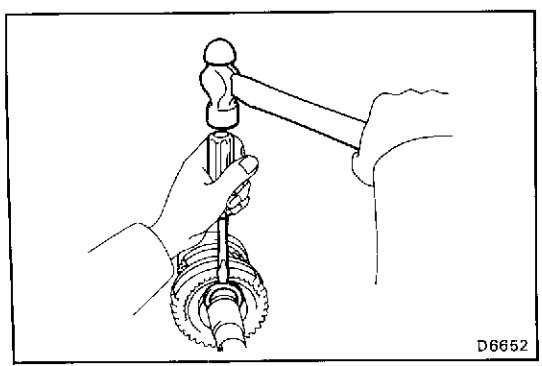

(b) Using a screwdriver and hammer, install the snap ring

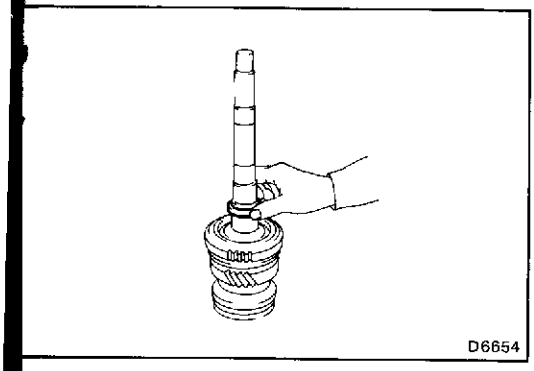

7. INSTALL SPACER AND FIRST GEAR ASSEMBLY

(a) Install the spacer on the output shaft.

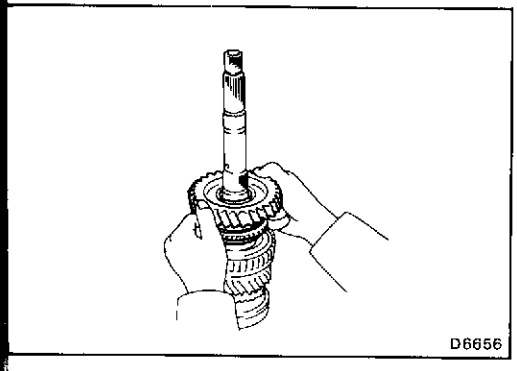

(b) Apply gear oil to the needle roller bearing.

(c) Assemble the 1st gear, synchronizer ring and needle roller bearing.

(d) Install the assembly on the output shaft with the synchronizer ring slots aligned with the shifting keys.

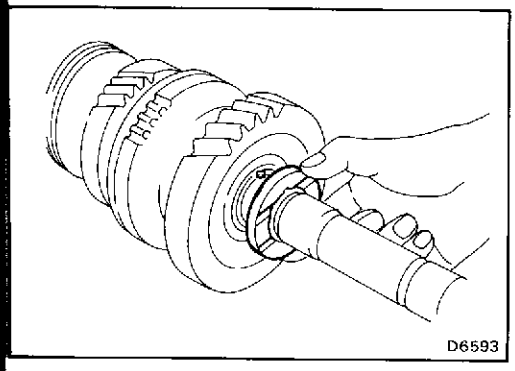

8. INSTALL STRAIGHT PIN AND FIRST GEAR THRUST WASHER

Install the 1st gear thrust washer onto the output shaft with the straight pin aligned with the slit of 1st gear thrust washer.

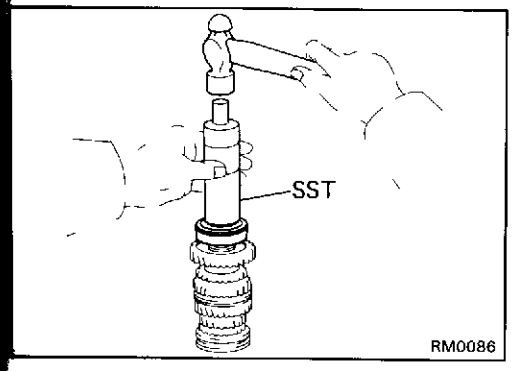

9. INSTALL OUTPUT SHAFT CENTER BEARING

Using SST, drive in the bearing with the outer race snap ring groove toward the rear.

SST 09316-60010 (09316-00010, 09316-00070)

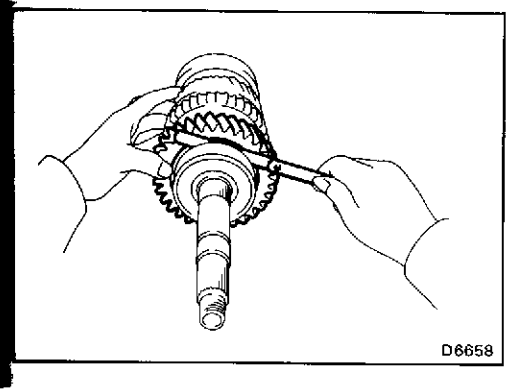

10. MEASURE FIRST GEAR THRUST CLEARANCE

Using a feeler gauge, measure the 1st gear thrust clearance.

Standard clearance:

1st gear 0.10 — 0.45 mm (0.0039 — 0.0177 in.)

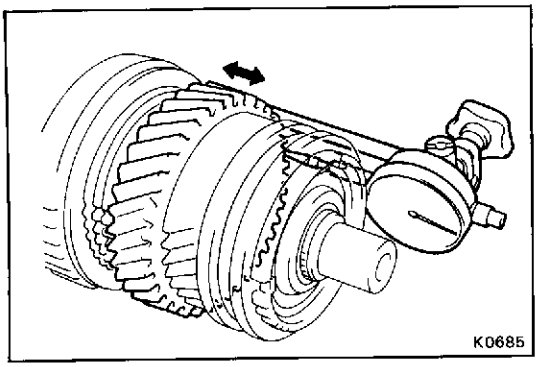

11. MEASURE SECOND GEAR THRUST CLEARANCE

Using a dial indicator, measure the 2nd gear thrust clearance

Standard clearance:

2nd gear 0.10 — 0.25 mm (0.0039 — 0.0098 in.)

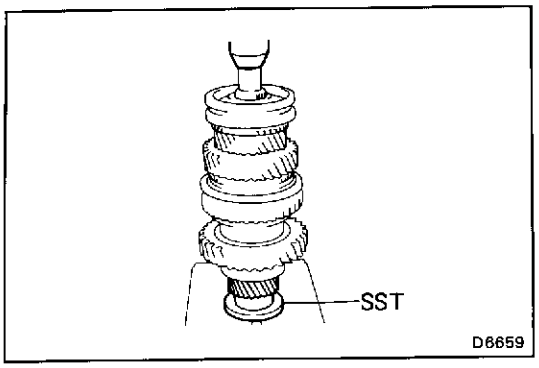

12. INSTALL FIFTH GEAR

Using SST and a press, install the 5th gear.

SST 09316-60010 (09316-00030)

Counter Gear and Reverse Idler Gear

COMPONENTS

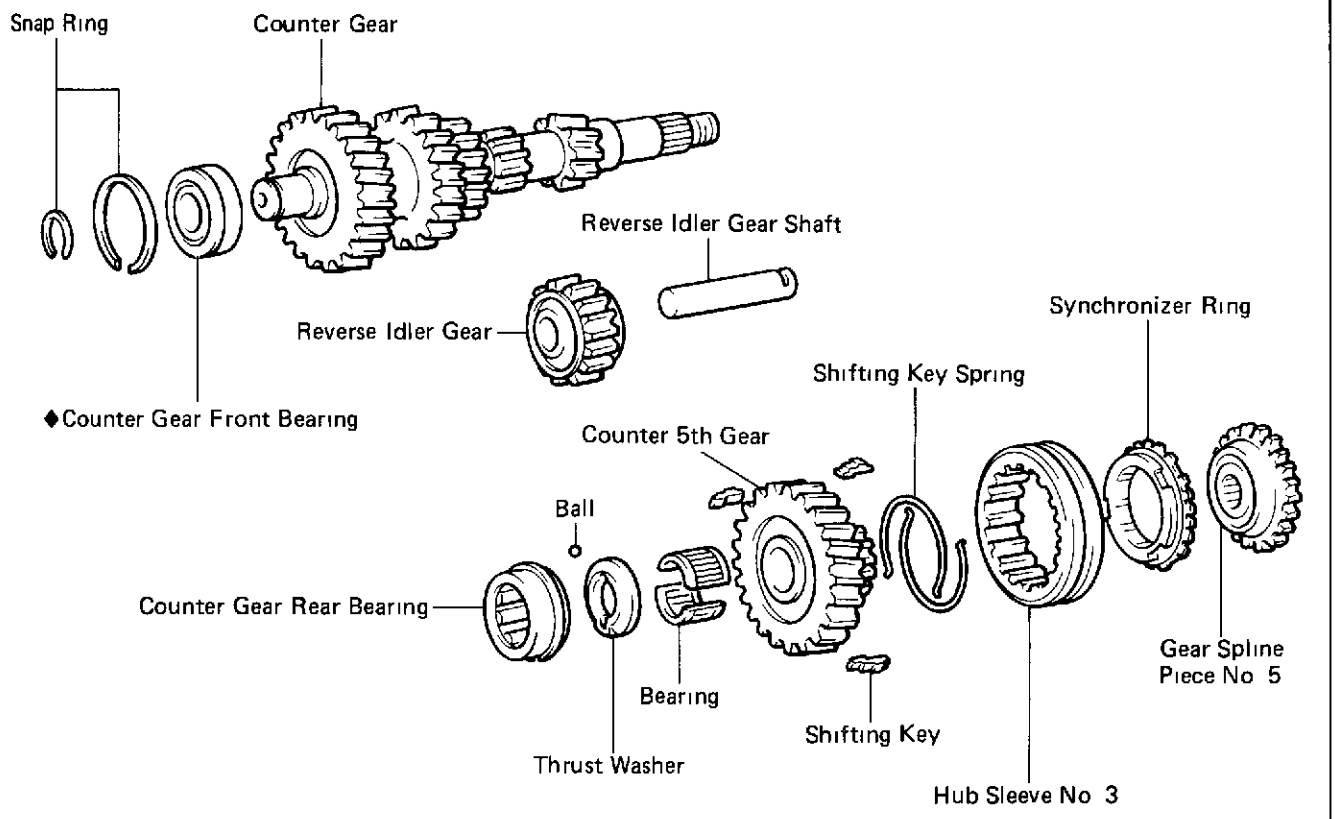

♦ Non-reusable part

RM0325

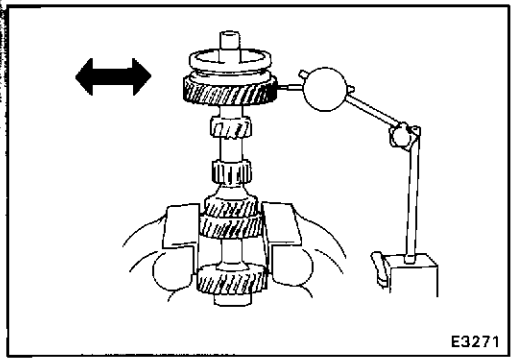

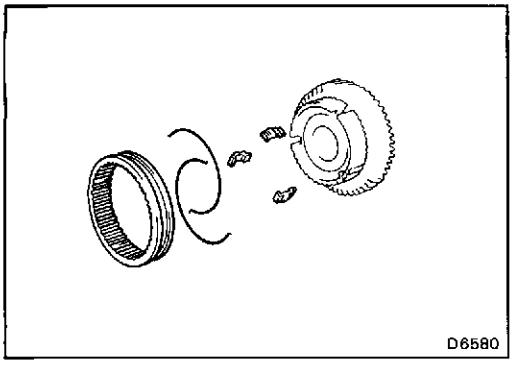

INSPECTION OF COUNTER GEAR

1. **CHECK OIL CLEARANCE OF 5TH GEAR**

   (a) Install the spacer, counter 5th gear and needle roller bearings.

   (b) Using a dial indicator, measure the counter 5th gear oil clearance.

   Standard clearance: **0.015 — 0.068 mm (0.006 — 0.0027 in.)**

   Maximum clearance: **0.16 mm (0.0063 in.)**

   If the clearance exceeds the limit, replace the gear, bearing or shaft.

2. **REMOVE HUB SLEEVE NO.3, SHIFTING KEYS AND SPRINGS FROM COUNTER 5TH GEAR**

   Using a screwdriver, remove the three shifting keys and the two springs from the counter 5th gear.

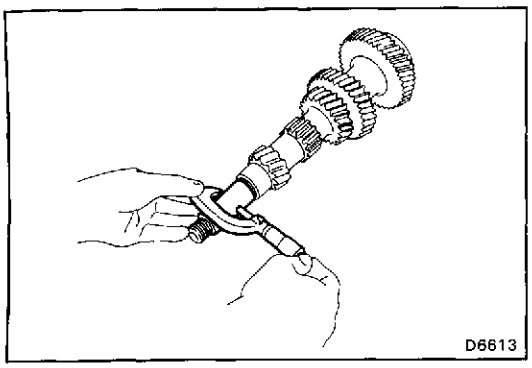

3. INSPECT COUNTER GEAR

Using a micrometer, measure the outer diameter of the counter gear journal.

Minimum diameter: 27.860 mm (1.0968 in.)

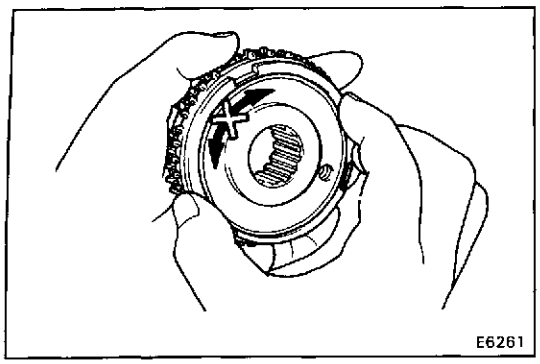

4. INSPECT SYNCHRONIZER RINGS

(a) Turn the ring and push it into check the braking action

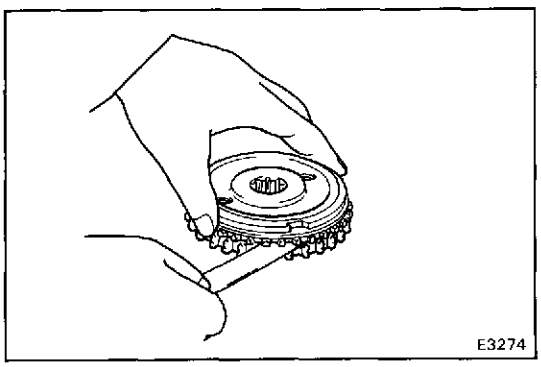

(b) Measure the clearance between the synchronizer ring back and the gear spline end.

Standard clearance: 0.8 — 1.6 mm (0.031 — 0.063 in.)

Minimum clearance: 0.6 mm (0.024 in.)

If the clearance is less than the limit, replace the synchronizer ring

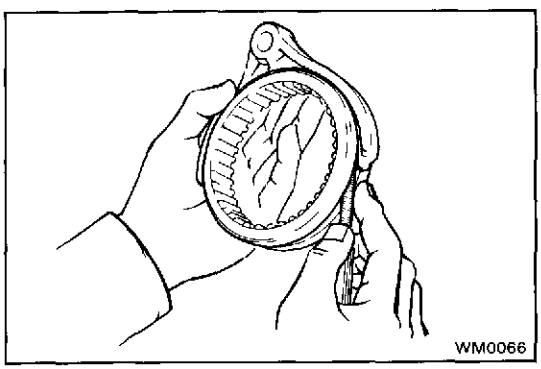

5. MEASURE CLEARANCE OF SHIFT FORKS AND HUB SLEEVES

Using a feeler gauge, measure the clearance between the hub sleeve and shift fork.

Maximum clearance: 1.0 mm (0.039 in.)

If the clearance more than the limit, replace the shift fork or hub sleeve

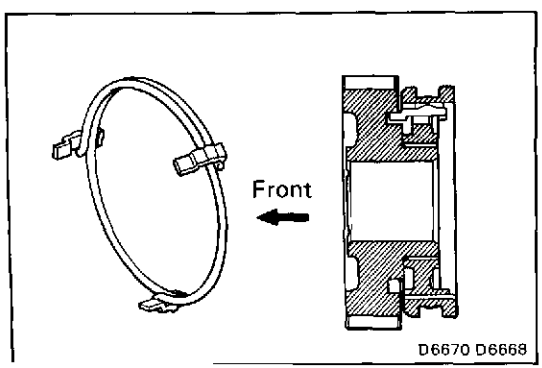

6. INSTALL HUB SLEEVE NO.3 SHIFTING KEYS AND SPRINGS TO COUNTER 5TH GEAR

(a) Install the counter 5th gear and shifting keys to the hub sleeve.

(b) Install the shifting key springs under the shifting keys

NOTICE: Install the key springs positioned so that their end gaps are not in line.

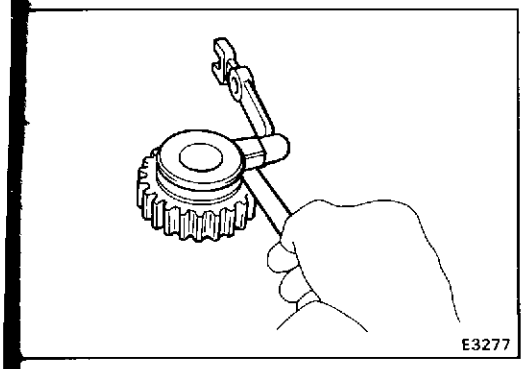
E3277

INSPECTION OF REVERSE IDLER GEAR

1. MEASURE CLEARANCE OF REVERSE IDLER GEAR AND SHIFT ARM SHOE

Using a feeler gauge, measure the clearance between the reverse idler gear and shift arm shoe.

Standard clearance: **0.05 — 0.25 mm (0.0020 — 0.0098 in.)**

Maximum clearance: **0.5 mm (0.020 in.)**

If the clearance more than the limit, replace the shift arm shoe or reverse idler gear.

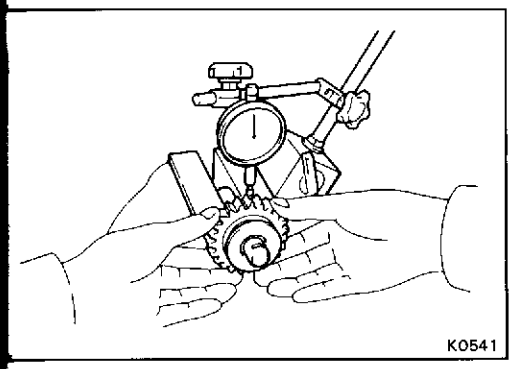
K0541

2. CHECK OIL CLEARANCE OF REVERSE IDLER GEAR

Using a dial indicator, measure reverse idler gear oil clearance.

Standard clearance: **0.040 — 0.082 mm (0.0016 — 0.0032 in.)**

Maximum clearance: **0.13 mm (0.0051 in.)**

If the clearance more than the limit, replace the reverse idler gear or reverse idler gear shaft.

REPLACEMENT OF BEARING

IF NECESSARY, REPLACE COUNTER GEAR FRONT BEARING

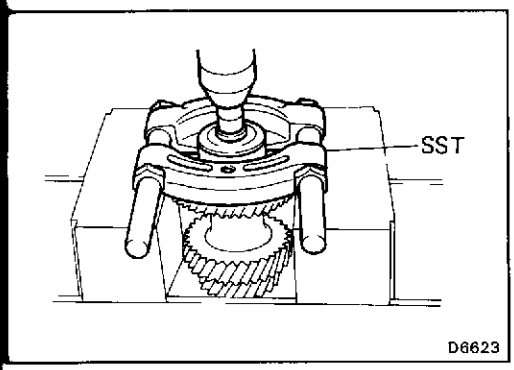

D6623

(a) Using snap ring pliers, remove the snap ring.

(b) Using SST, press out the bearing.

SST 09950-00020

(c) Replace the side race.

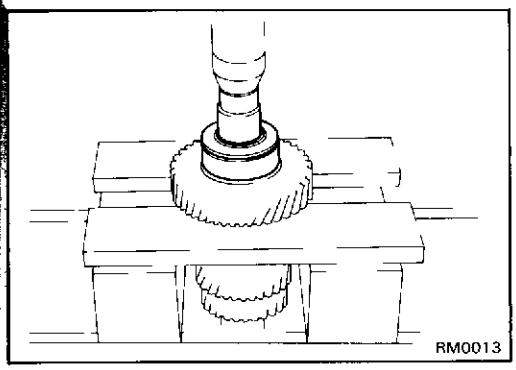
RM0013

(d) Using a 24 mm socket wrench, press in the bearing and inner race.

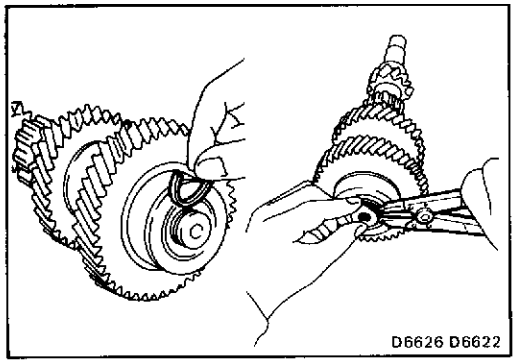
D6626 D6622

(e) Select a snap ring that will allow minimum axial play and install it on the shaft

Mark	Thickness mm (in.)
A	2.00 — 2.05 (0.0787 — 0.0807)
B	2.05 — 2.10 (0.0807 — 0.0827)
C	2.10 — 2.15 (0.0827 — 0.0846)
D	2.15 — 2.20 (0.0846 — 0.0866)
E	2.20 — 2.25 (0.0866 — 0.0886)

Transfer Adaptor

COMPONENTS

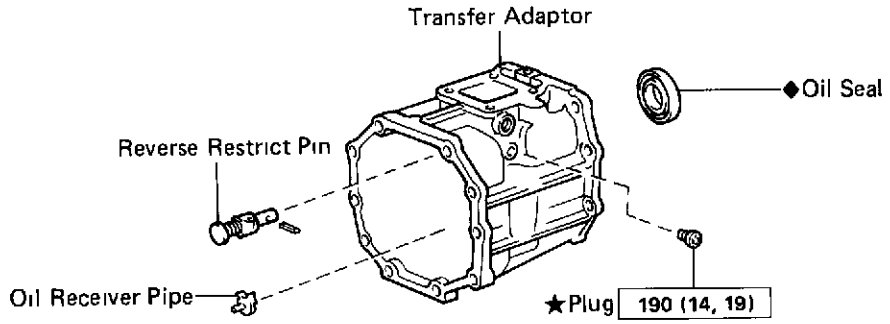

kg-cm (ft-lb, N·m) : Specified torque
◆ Non-reusable part
★ Precoated part

RM0324

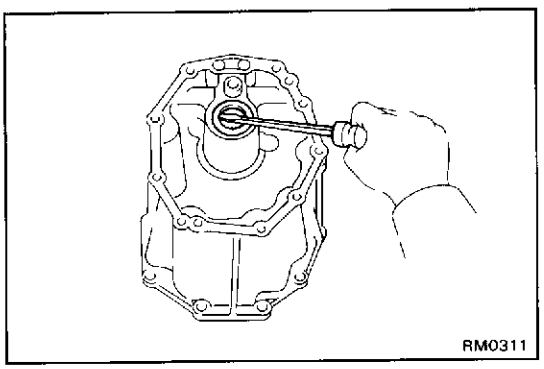

REPLACEMENT OF OIL SEAL

1. **IF NECESSARY, REPLACE TRANSFER ADAPTOR OIL SEA**
   (a) Using a screwdriver, pry out the oil seal.

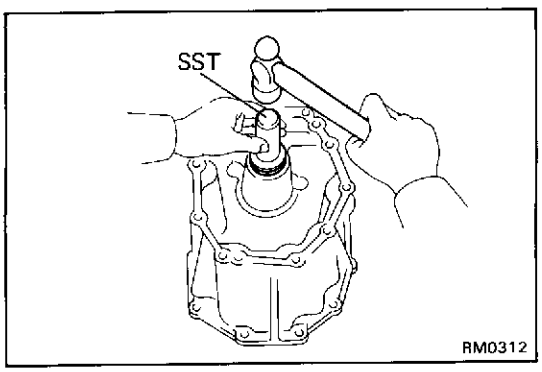

   (b) Using SST, drive in a new oil seal.
   SST 09325-12010

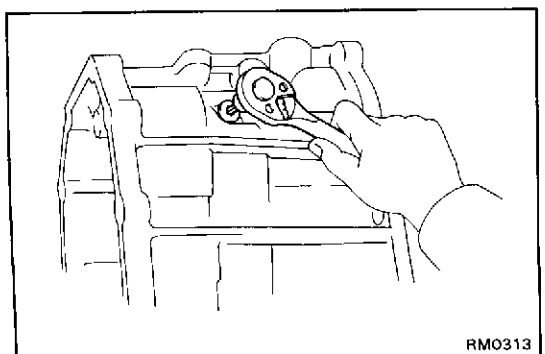

INSPECTION AND REPLACEMENT OF REVERSE RESTRICT PIN

1. **REMOVE REVERSE RESTRICT PIN**
   (a) Using a torx socket wrench, remove the screw plu

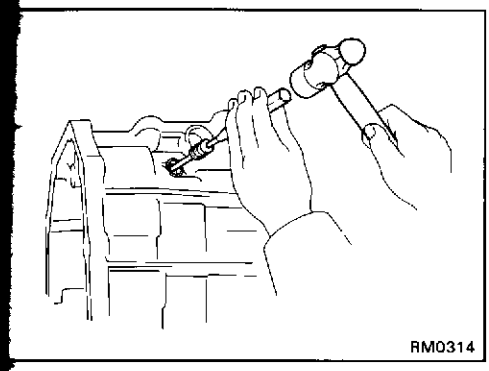
RM0314

(b) Using a pin punch and hammer, drive out the slotted spring pin.

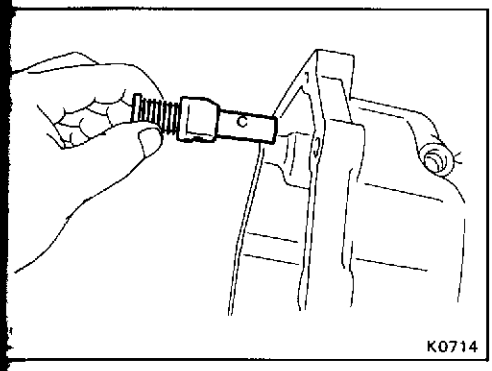

K0714

(c) Remove the reverse restrict pin.

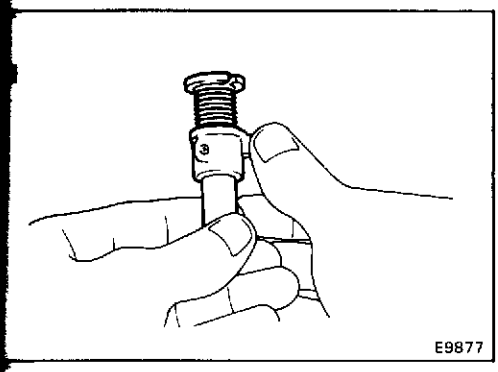
E9877

2. INSPECTION OF REVERSE RESTRICT PIN

Turn and push the reverse restrict pin by hand while applying direction.

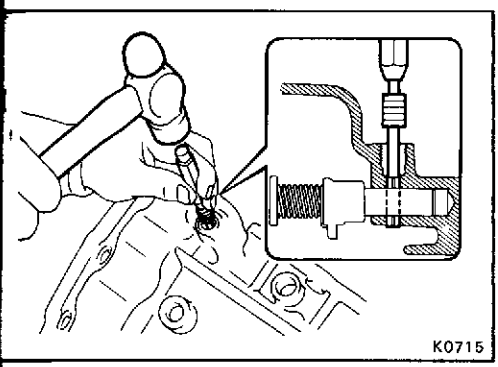
K0715

3. INSTALL REVERSE RESTRICT PIN

(a) Install the reverse restrict pin to the transfer adaptor.

(b) Using pin punch and hammer, drive in the slotted spring pin.

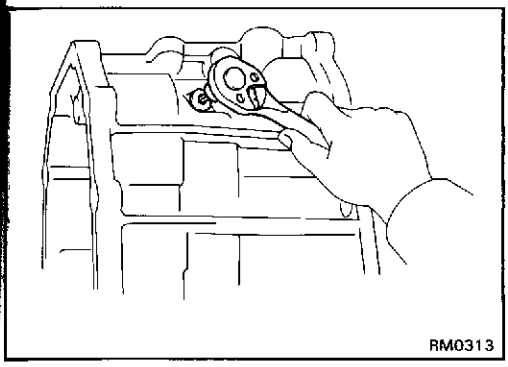
RM0313

(c) Apply liquid sealer to the plug threads.

Sealant: Part No.08833-00080, THREE BOND 1344, LOCTITE 242 or equivalent

(d) Using a torx socket wrench, install and torque the screw plug

Torque: 190 kg-cm (14 ft-lb, 19 N·m)

Front Bearing Retainer

COMPONENTS

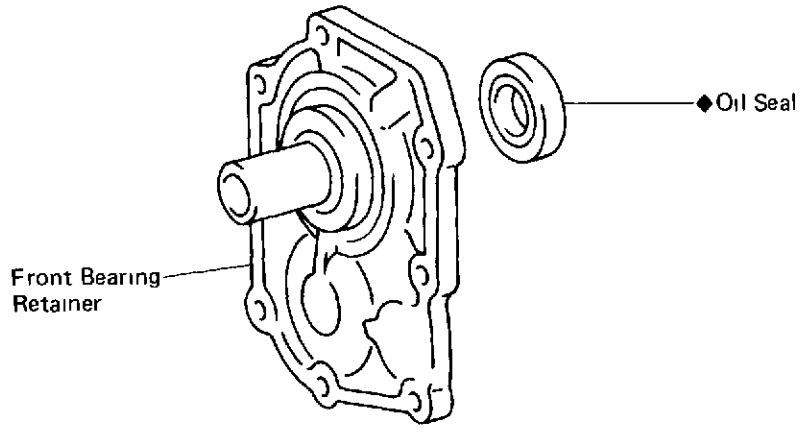

◆ Non-reusable part

RM0322

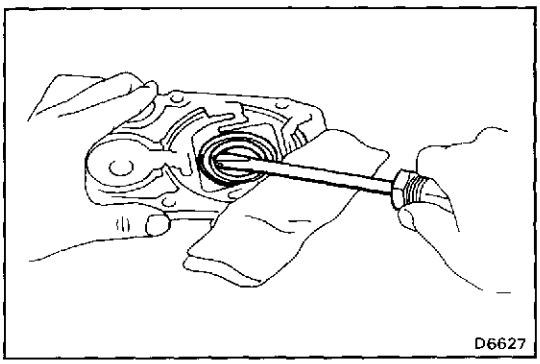

REPLACEMENT OF OIL SEAL

IF NECESSARY, REPLACE FRONT BEARING RETAINER OIL SEAL

(a) Using a screwdriver, pry out the oil seal

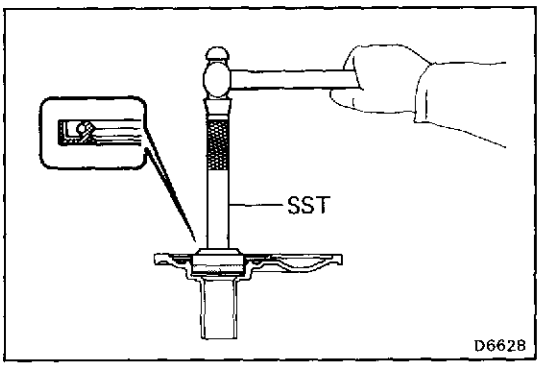

(b) Using SST, drive in a new oil seal.

SST 09608-35014 (09608-06020, 09608-06090)

Drive in depth: 11.2 — 12.2 mm (0.434 — 0.473 in.)
Transmission case installation surface

ASSEMBLY OF TRANSMISSION

(See page MT-99, 100)

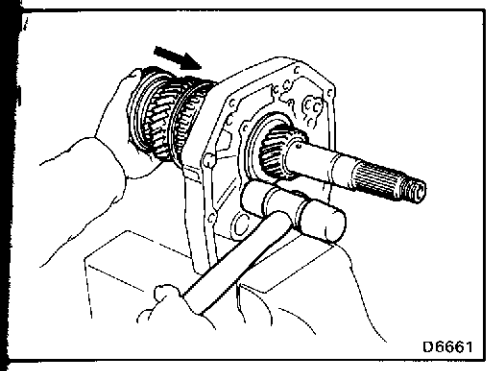

1. INSTALL OUTPUT SHAFT TO INTERMEDIATE PLATE

(a) Install the output shaft into the intermediate plate by pushing on the output shaft and tapping on the intermediate plate.

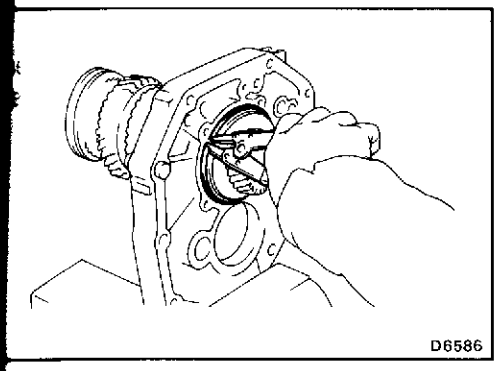

(b) Using snap ring pliers, install the snap ring.

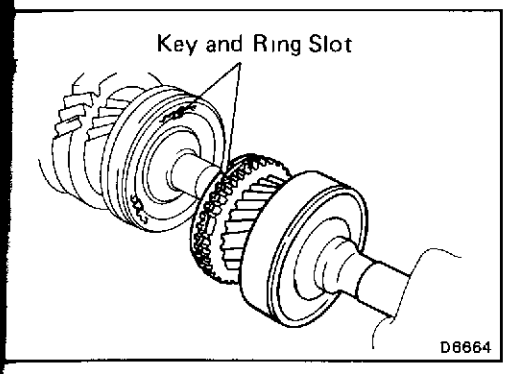

2. INSTALL INPUT SHAFT

(a) Apply gear oil to the needle roller bearing and install it into the input shaft.

(b) Install the input shaft to the output shaft with the synchronizer ring slots aligned with the shifting keys.

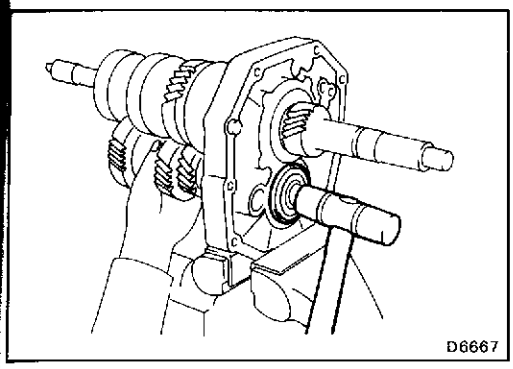

3. INSTALL COUNTER GEAR

Install the counter gear into the intermediate plate while holding the counter gear, and install the counter rear bearing with a plastic hammer.

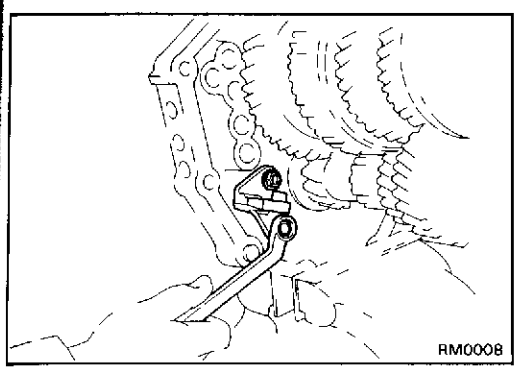

4. INSTALL REVERSE SHIFT ARM BRACKET

Install the reverse shift arm bracket and torque the bolts.

Torque: 185 kg-cm (13 ft-lb, 18 N·m)

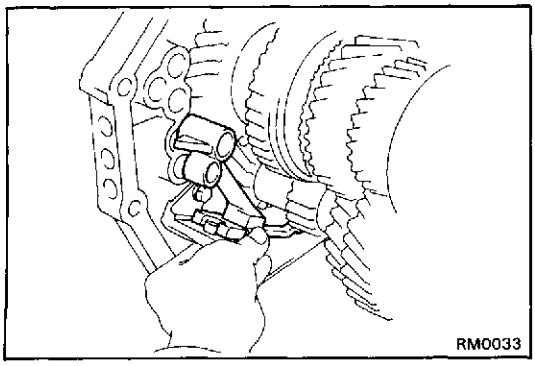

5. INSTALL REVERSE SHIFT ARM TO REVERSE SHIFT ARM BRACKET

Install the reverse shift arm to the pivot of the reverse shift arm bracket.

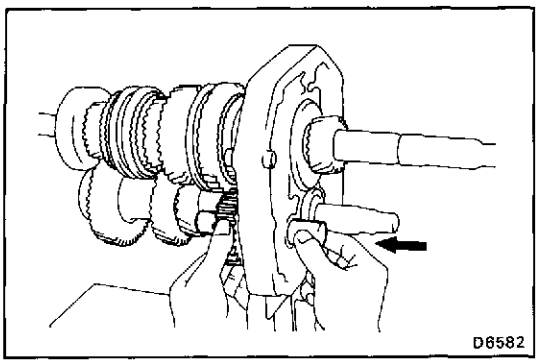

6. INSTALL REVERSE IDLER GEAR AND SHAFT

Align the reverse shift arm shoe to the reverse idler gear groove and insert the reverse idler gear shaft to the intermediate plate.

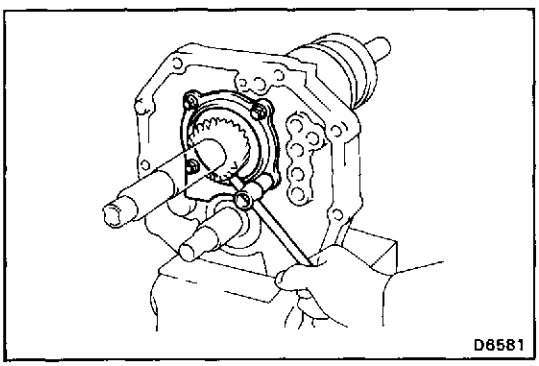

7. INSTALL REAR BEARING RETAINER

(a) Align the rear bearing retainer to the reverse idler gear shaft groove.

(b) Install and torque the four bolts.

Torque: 185 kg-cm (13 ft-lb, 18 N·m)

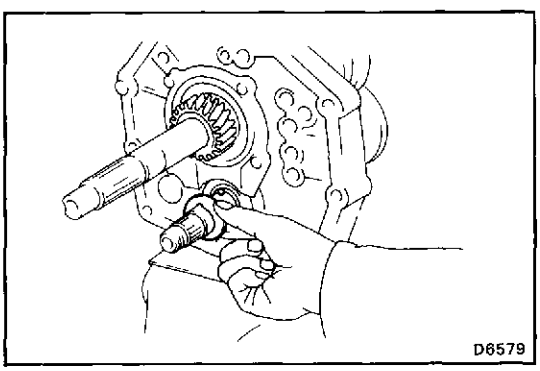

8. INSTALL BALL AND THRUST WASHER

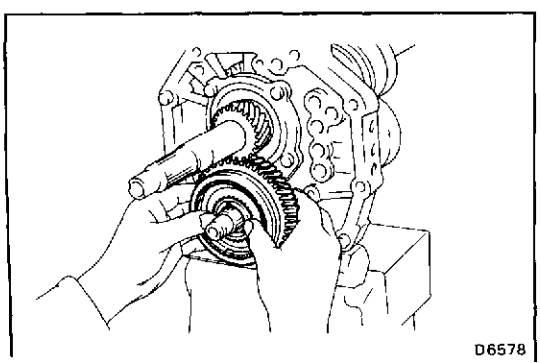

9. INSTALL COUNTER FIFTH GEAR WITH HUB SLEEVE NO. ASSEMBLY AND NEEDLE ROLLER BEARINGS

(a) Apply gear oil to the needle roller bearings

(b) Install the counter 5th gear with hub sleeve No.3 an needle roller bearings.

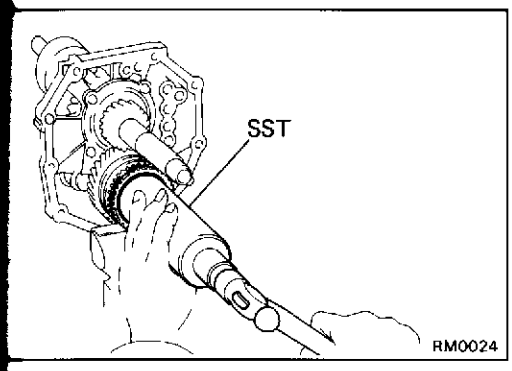

10. INSTALL SYNCHRONIZER RING AND GEAR SPLINE PIECE NO.5

(a) Install the synchronizer ring on gear spline piece No.5.

(b) Using SST, drive in No.5 gear spline piece with the synchronizer ring slots aligned with the shifting keys.

SST 09316-60010 (09316-00010)

HINT: When installing gear spline piece No.5, support the counter gear in front with a 3-5 lb hammer or equivalent.

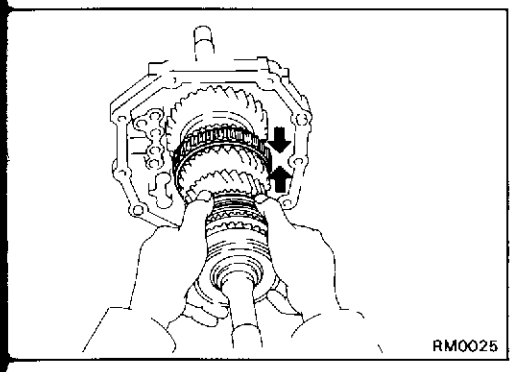

11. INSTALL LOCK NUT

(a) Engage the gear double meshing.

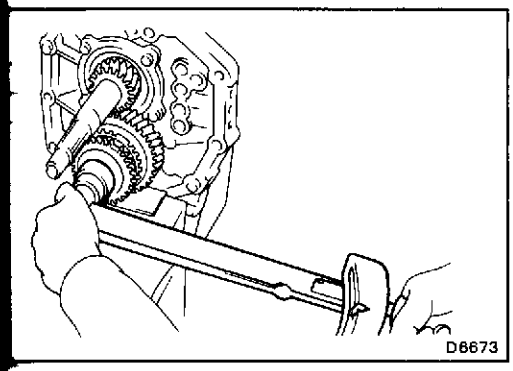

(b) Install and torque the lock nut.

Torque: 1,300 kg-cm (94 ft-lb, 127 N·m)

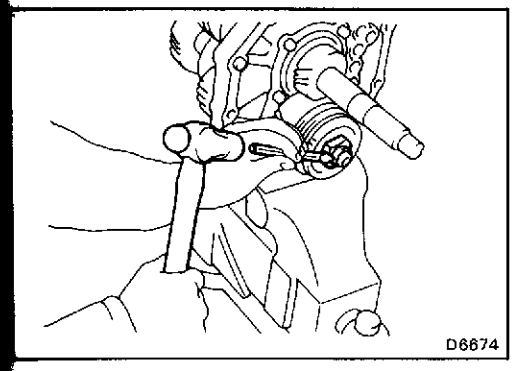

(c) Stake the lock nut.

(d) Disengage the gear double meshing.

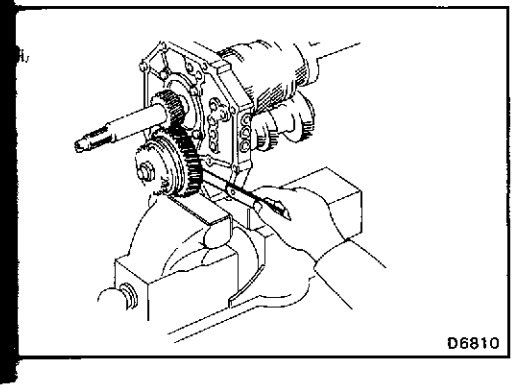

12. MEASURE COUNTER FIFTH GEAR THRUST CLEARANCE

Using a feeler gauge, measure the counter 5th gear thrust clearance.

Standard clearance: 0.10 — 0.35 mm (0.0039 — 0.0138 in.)

Maximum clearance: 0.35 mm (0.0138 in.)

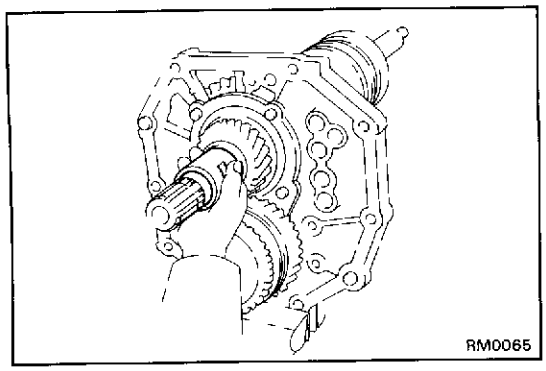

13. INSTALL SPACER

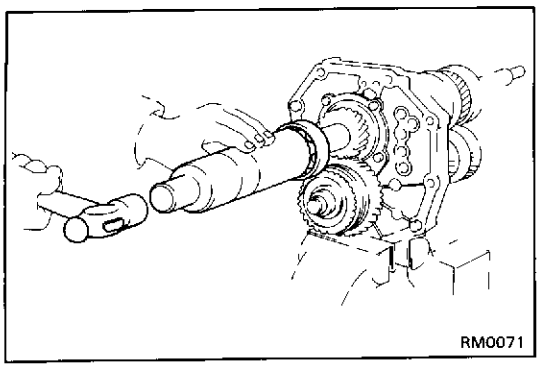

14. INSTALL OUTPUT SHAFT REAR BEARING

Using SST, drive in the rear bearing.

SST 09316-60010 (09316-00010, 09316-00070)

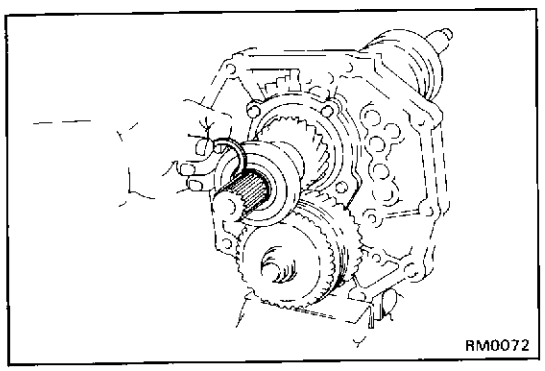

15. INSTALL SNAP RING

(a) Select a snap ring that will allow minimum axial play

Mark	Thickness mm (in.)	Mark	Thickness (in.)
A	2.65 – 2.70 (0.1043 – 0.1063)	K	3.10 – 3.15 (0.1220 – 0.1240)
B	2.70 – 2.75 (0.1063 – 0.1083)	L	3.15 – 3.20 (0.1240 – 0.1260)
C	2.75 – 2.80 (0.1083 – 0.1102)	M	3.20 – 3.25 (0.1260 – 0.1280)
D	2.80 – 2.85 (0.1102 – 0.1122)	N	3.25 – 3.30 (0.1280 – 0.1299)
E	2.85 – 2.90 (0.1122 – 0.1142)	P	3.30 – 3.35 (0.1299 – 0.1319)
F	2.90 – 2.95 (0.1142 – 0.1161)	Q	3.35 – 3.40 (0.1319 – 0.1339)
G	2.95 – 3.00 (0.1161 – 0.1181)	R	3.40 – 3.45 (0.1339 – 0.1358)
H	3.00 – 3.05 (0.1181 – 0.1201)	S	3.45 – 3.50 (0.1358 – 0.1378)
J	3.05 – 3.10 (0.1201 – 0.1220)		

(b) Using a screwdriver and hammer, install the snap ring

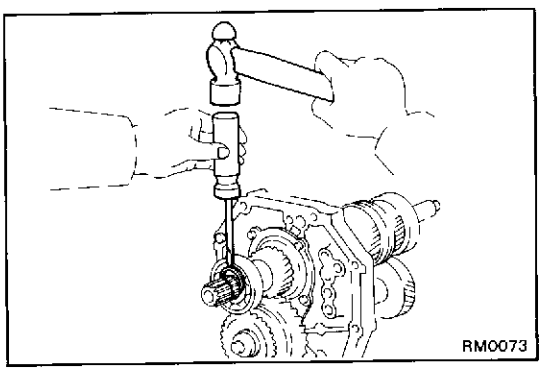

16. INSTALL SLEEVE TO OUTPUT SHAFT

Using a plastic hammer, tap the sleeve onto the output shaft.

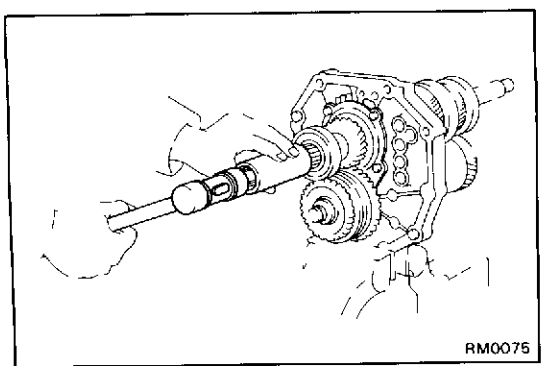

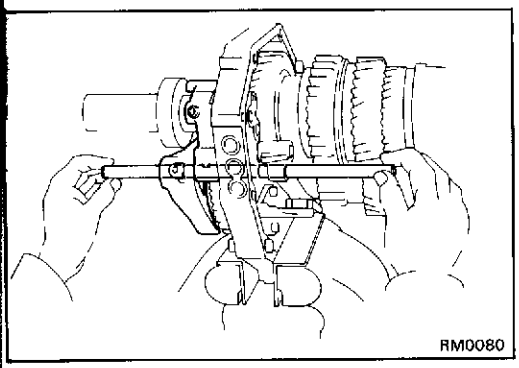

17. **(R150F and R151F)**
INSTALL SHIFT FORK SHAFT NO.4, REVERSE SHIFT HEAD AND SHIFT FORK NO.3

(a) Place shift fork No.3 into the groove of hub sleeve No.3.

(b) Install shift fork shaft No.4 to shift fork No.3, reverse shift head and shift fork through the intermediate plate.

(c) Install the locking ball into the reverse shift head.

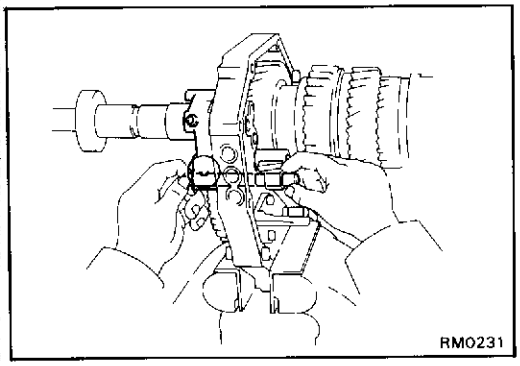

(R141F)
INSTALL SHIFT FORK SHAFT NO.4 AND REVERSE SHIFT HEAD

Install shift fork shaft No.4 to reverse shift head and shift fork through the intermediate plate.

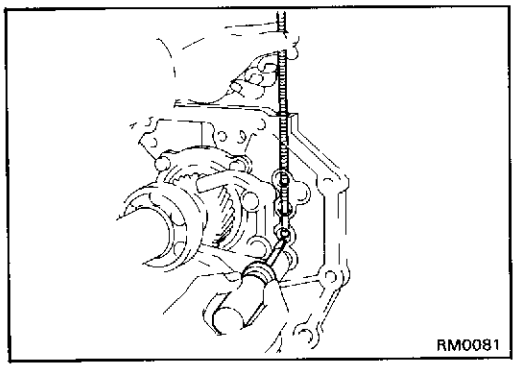

18. **INSTALL SHIFT FORK SHAFT NO.3 AND SHIFT FORK NO.1**

(a) Using a magnetic finger and screwdriver, install the locking ball into the intermediate plate.

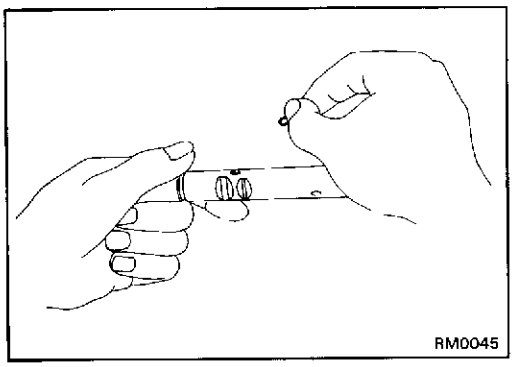

(b) Install the interlock pin into the shaft hole.

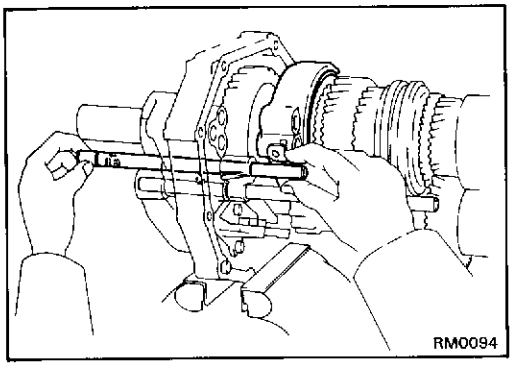

(c) Place shift fork No.1 into the groove of hub sleeve No.1.

(d) Install fork shaft No.3 to the reverse shift fork and shift head through the intermediate plate.

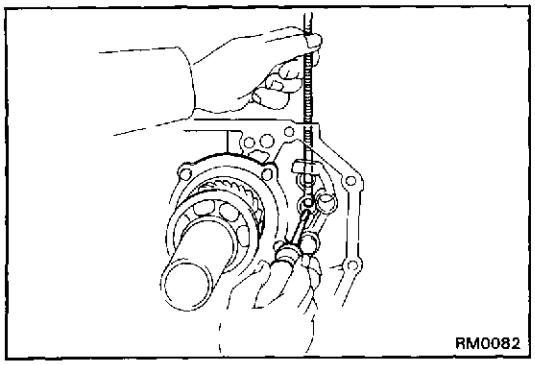

19. INSTALL SHIFT FORK SHAFT NO.1

(a) Using a magnetic finger and screwdriver, install the interlock pin into the intermediate plate.

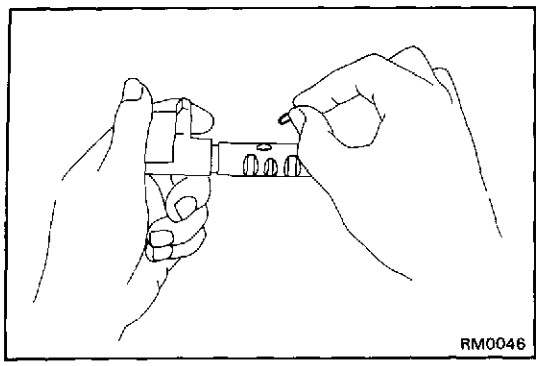

(b) Install the interlock pin into the shaft hole.

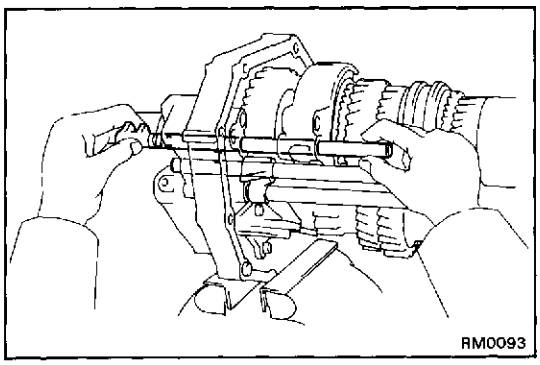

(c) Install fork shaft No.1 to shift fork No.1 through the intermediate plate.

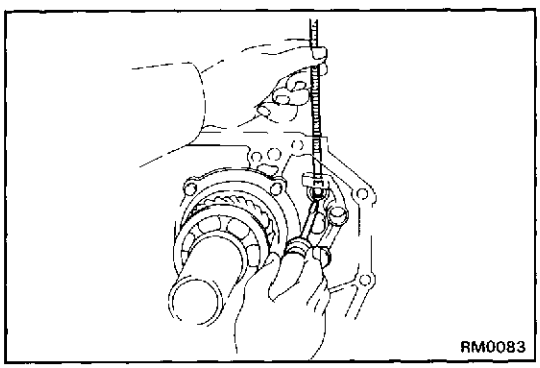

20. INSTALL SHIFT FORK SHAFT NO.2 AND SHIFT FORK

(a) Using a magnetic finger and screwdriver, install the interlock pin into the intermediate plate.

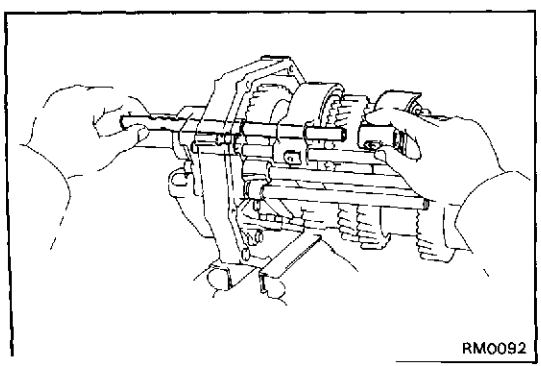

(b) Place shift fork No.2 into the groove of hub sleeve No.2.

(c) Install fork shaft No.2 to shift fork No.1 and No through the intermediate plate.

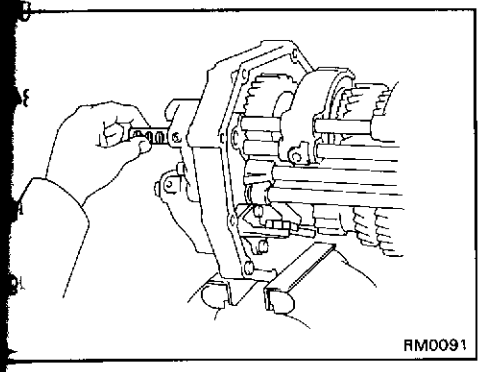

21. INSTALL SHIFT FORK SHAFT NO.5

Install shift fork shaft No.5 to the reverse shift head through the intermediate plate.

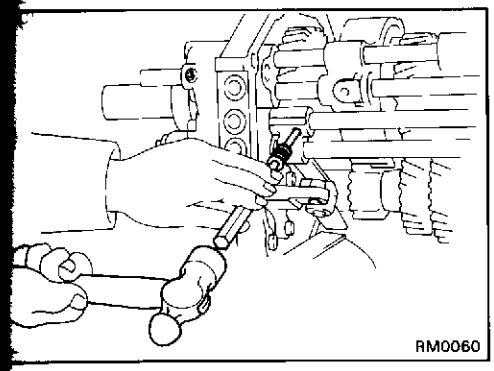

22. INSTALL SLOTTED SPRING PINS

Using a pin punch and hammer, drive in the two slotted spring pins to the reverse shift head and shift fork.

23. CHECK INTERLOCK

(a) Shift No.1 fork shaft to the 1st speed position.

(b) No.2, No.3, No.4 and No.5 fork shafts should not move.

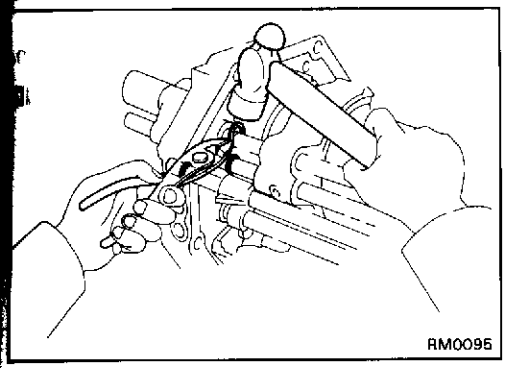

24. INSTALL SNAP RINGS

(R150F and R151F)
Using pliers and a hammer, install the three snap rings.

(R141F)
Using pliers and a hammer, install the six snap rings.

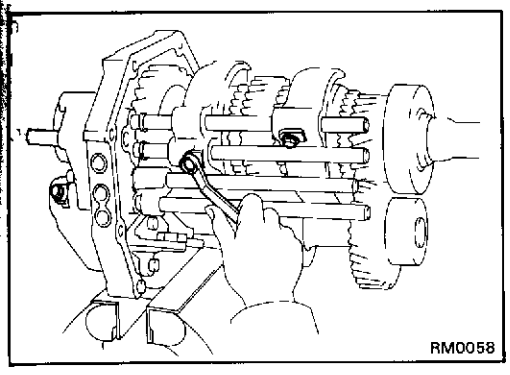

25. INSTALL SET BOLTS

(R150F and R151F)
Install and torque the three bolts.

(R141F)
Install and torque the two bolts.

Torque: 200 kg-cm (14 ft-lb, 20 N·m)

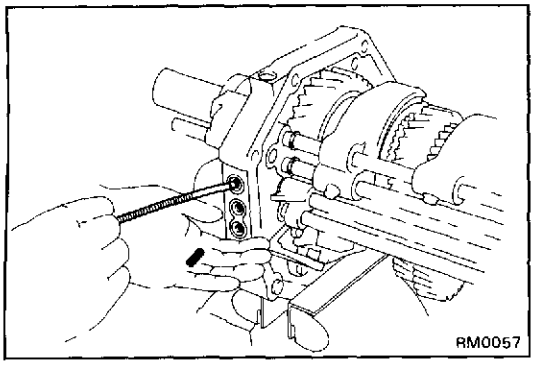

26. INSTALL LOCKING BALLS, SPRINGS AND SCREW PLUGS

(a) Apply liquid sealer to the plug threads.

Sealant: Part No.08833-00080, THREE BOND 1344, LOCTITE 242 or equivalent

(b) (R150F and R151F)
Install the four locking balls, springs and screw plugs.

(R141F)
Install the three locking balls, springs and screw plugs.

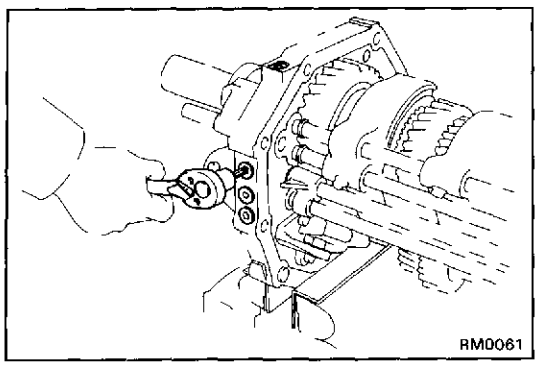

(c) Using a torx socket wrench, torque the screw plugs.

Torque: 190 kg-cm (14 ft-lb, 19 N·m)

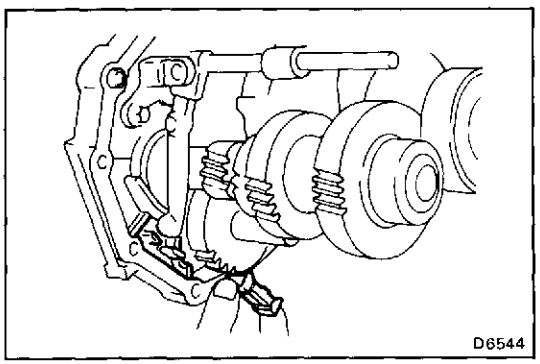

27. INSTALL MAGNET TO INTERMEDIATE PLATE

28. DISMOUNT INTERMEDIATE PLATE FROM VISE

(a) Dismount the intermediate plate from the vise.

(b) Remove the bolts, nuts and plate washers.

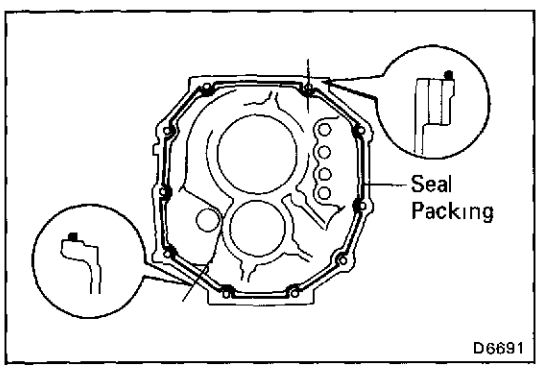

29. INSTALL TRANSMISSION CASE

(a) Apply seal packing to the transmission case as shown.

Seal packing: Part No.08826-00090, THREE BOND 1281 or equivalent

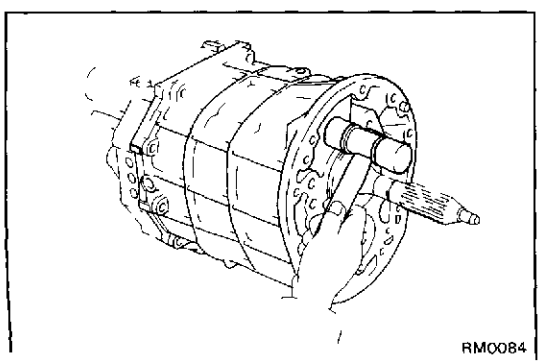

(b) Align each bearing outer race, each fork shaft end and reverse idler gear shaft end with the case installation holes, and install the case.

If necessary, tap on the case with a plastic hammer.

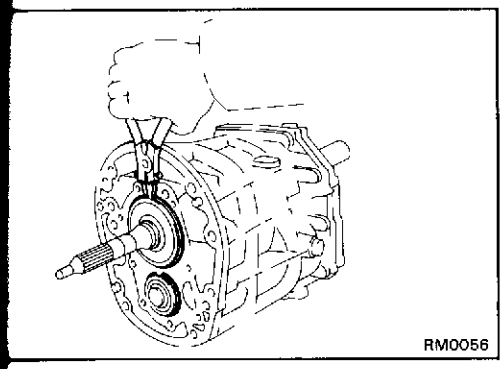
RM0056

30. INSTALL BEARING SNAP RINGS

Using snap ring pliers, install the two snap rings to the input shaft bearing and counter gear front bearing.

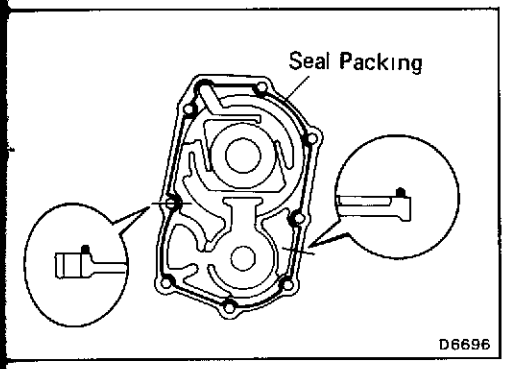

D6696

31. INSTALL FRONT BEARING RETAINER

(a) Remove any packing material and be careful not to drop oil on the contacting surfaces of the transmission case or front bearing retainer.

(b) Apply seal packing to the transmission case as shown.

Seal packing: Part No.08826-00090, THREE BOND 1281 or equivalent

HINT: Install the front bearing retainer as soon as the seal packing is applied.

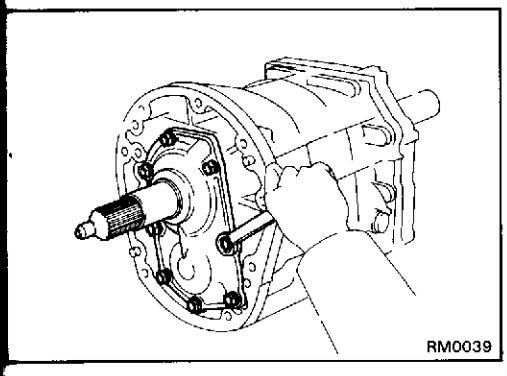
RM0039

(c) Apply liquid sealer to the bolt threads.

Sealant: Part No.08833-00080, THREE BOND 1344, LOCTITE 242 or equivalent

(d) Install and torque the bolts.

Torque: 170 kg-cm (12 ft-lb, 17 N·m)

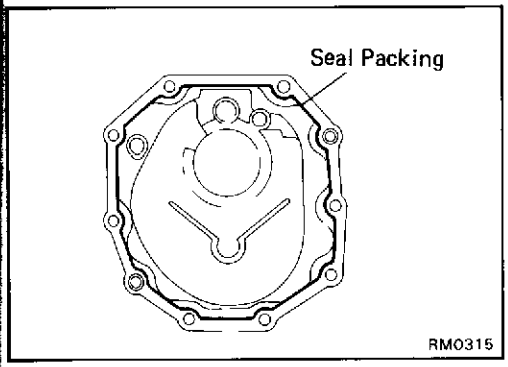

RM0315

32. INSTALL TRANSFER ADAPTOR, SHIFT LEVER SHAFT AND SHIFT LEVER HOUSING

(a) Remove any packing material and be careful not to drop oil on the contacting surfaces of the transmission case or transfer adaptor.

(b) Apply seal packing to the transfer adaptor as shown.

Seal packing: Part No.08826-00090, THREE BOND 1281 or equivalent

HINT: Install the transfer adaptor as soon as the seal packing is applied.

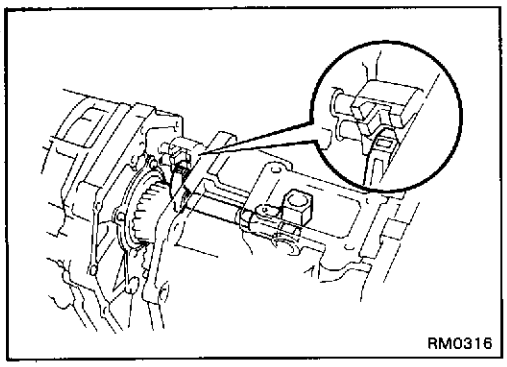
RM0316

(c) Insert the shift and select lever into the transfer adaptor.

(d) Connect the shift and select lever to the fork shaft and put in the shift lever housing.

(e) Align No.5 fork shaft to the transfer adaptor installation hole and push in the transfer adaptor.

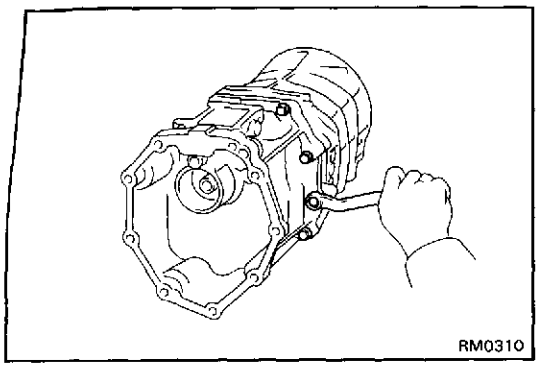

(f) Install and torque the bolts.

Torque: 380 kg-cm (27 ft-lb, 37 N·m)

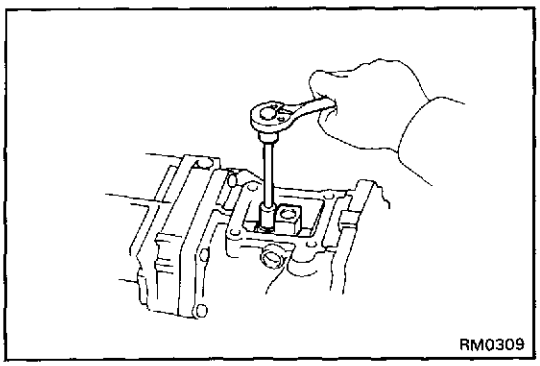

(g) Install and torque the shift lever housing bolt.

Torque: 390 kg-cm (28 ft-lb, 38 N·m)

(h) Apply liquid sealer to the plug threads.

Sealant: Part No.08833-00080, THREE BOND 1344, LOCTITE 242 or equivalent

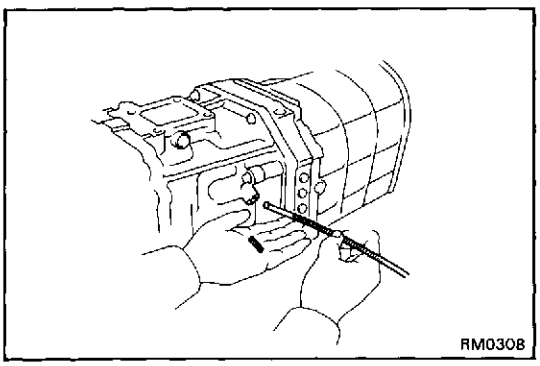

33. INSTALL LOCKING BALL, SPRING AND SCREW PLUG

(a) Install the locking ball, spring and plug.

(b) Apply liquid sealer to the plug threads.

Sealant: Part No.08833-00080, THREE BOND 1344, LOCTITE 242 or equivalent

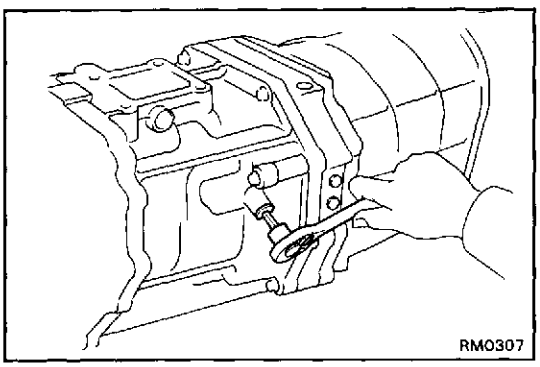

(c) Install and torque the plug.

Torque: 190 kg-cm (14 ft-lb, 19 N·m)

34. AFTER INSTALLING TRANSFER ADAPTOR CHECK FOLLOWING ITEMS

(a) Check to see that the input and output shafts rotate smoothly.

(b) Check to see that shifting can be made smoothly to all positions.

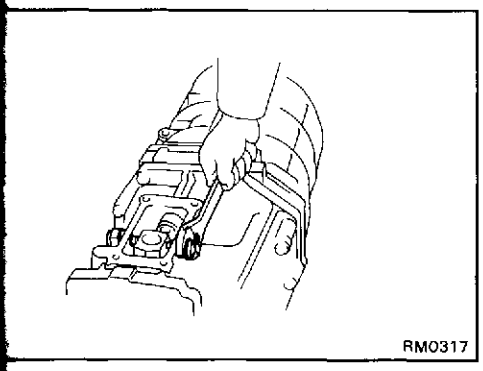
RM0317

35. INSTALL RESTRICT PINS

(a) Install the black pin on the reverse gear/5th gear side.

(b) Install another pin and torque the pins.

Torque: 380 kg-cm (27 ft-lb, 37 N·m)

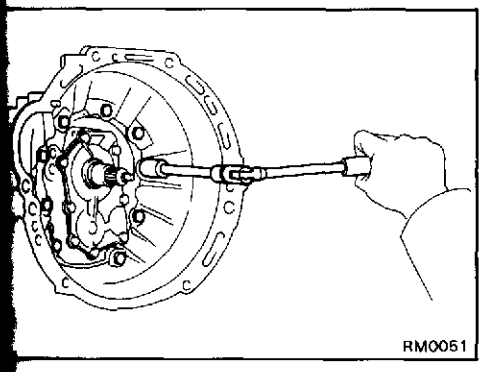
RM0051

36. INSTALL CLUTCH HOUSING

(a) Install the clutch housing.

(b) Install and torque the nine bolts.

Torque: 370 kg-cm (27 ft-lb, 36 N·m)

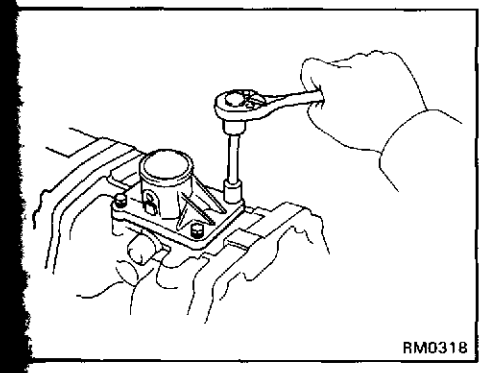
RM0318

37. INSTALL SHIFT LEVER RETAINER WITH NEW GASKET

(a) Apply liquid sealer to the bolt threads.

Sealant: Part No.08833-00080, THREE BOND 1344, LOCTITE 242 or equivalent

(b) Install and torque the four bolts.

Torque: 185 kg-cm (13 ft-lb, 18 N·m)

38. INSTALL BACK-UP LIGHT SWITCH

Torque: 380 kg-cm (27 ft-lb, 37 N·m)

39. INSTALL RELEASE FORK AND BEARING

TRANSFER

	Page
TROUBLESHOOTING	TF-2
ON-VEHICLE REPAIR	TF-2
REMOVAL AND INSTALLATION OF TRANSFER	TF-3
DISASSEMBLY OF TRANSFER	TF-4
COMPONENT PARTS	TF-11
Rear Output Shaft Assembly	TF-11
Idler Gear	TF-17
Rear Output Shaft Bearing Retainers	TF-19
Transfer Front Case	TF-22
Diaphragm Cylinder	TF-31
Transfer Rear Case	TF-35
ASSEMBLY OF TRANSFER	TF-37

TROUBLESHOOTING

Problem	Possible cause	Remedy	Page
Hard to shift or will not shift	Splines on input shaft dirty or burred	Repair as necessary	TF-4
	Transfer faulty	Disassemble and inspect transfer	TF-4
Transfer jumps out of gear	Transfer faulty	Disassemble and inspect transfer	TF-4

ON-VEHICLE REPAIR

ON-VEHICLE REPLACEMENT OF FRONT AND REAR OIL SEALS

1. **DRAIN GEAR OIL FROM TRANSFER**

2. **REMOVE FRONT AND REAR PROPELLER SHAFTS (See page PR-2)**

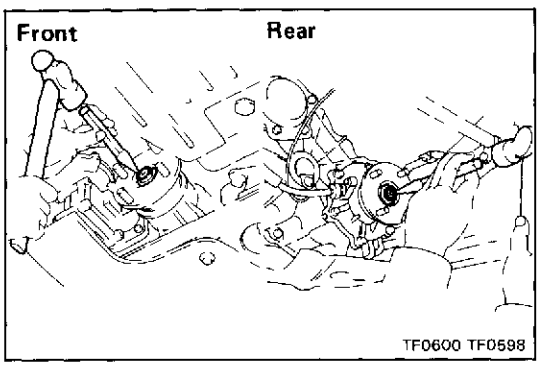

3. **REMOVE COMPANION FLANGE**

(a) Using a hammer and chisel, loosen the staked part of the nut.

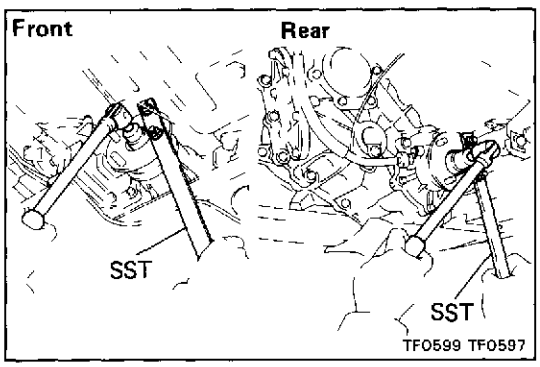

(b) Using SST and two nuts to hold the companion flange, remove the companion flange lock nut

SST 09330-00021

(c) Remove the plate washer and companion flange.

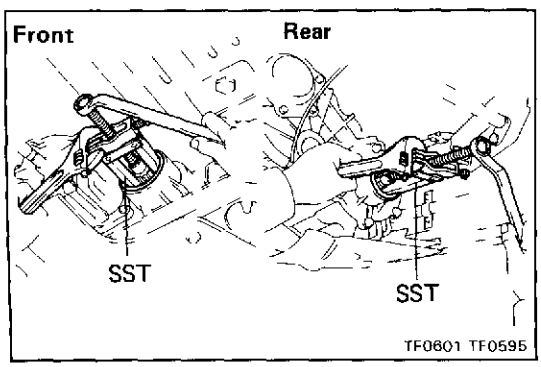

4. **REPLACE OIL SEAL**

(a) Using SST, remove the output shaft oil seal.

SST 09308-10010

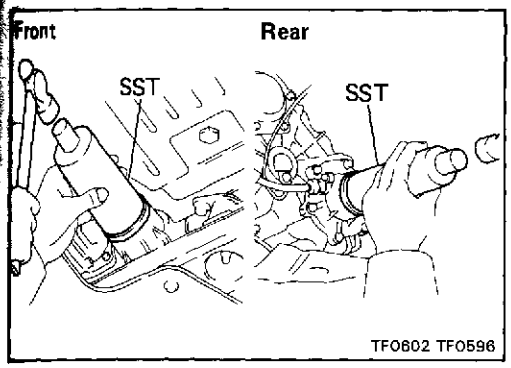

(b) Using SST and hammer, tap in a new oil seal.

SST 09316-60010 (09316-00060)

(c) Apply MP grease to the oil seal lip.

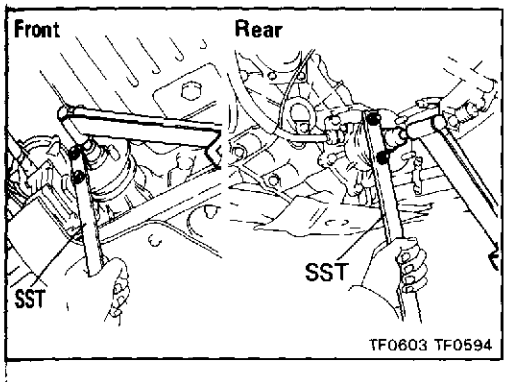

5. INSTALL COMPANION FLANGE

(a) Install the plate washer, companion flange and a new lock nut.

(b) Using SST and two nuts to hold the companion flange, torque the nut.

SST 09330-00021

Torque: 1,300 kg-cm (94 ft-lb, 127 N·m)

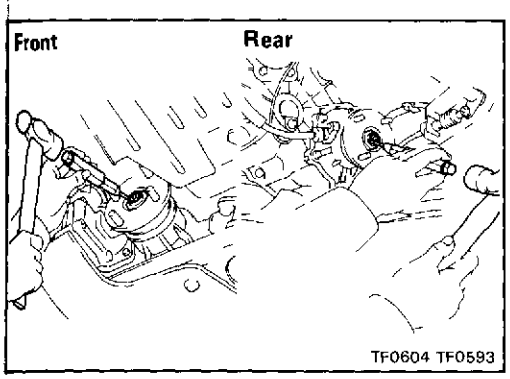

(c) Using a punch and hammer, stake the lock nut.

6. INSTALL FRONT AND REAR PROPELLER SHAFTS
(See page PR-2)

Torque: 900 kg-cm (65 ft-lb, 88 N·m)

7. FILL TRANSFER WITH OIL

Oil grade: API GL-4 or GL-5

Viscosity: SAE 90

Capacity: 2.1 liters (2.2 US qts, 1.8 Imp. qts)

REMOVAL AND INSTALLATION OF TRANSFER

(See page MT-5)

DISASSEMBLY OF TRANSFER

COMPONENTS

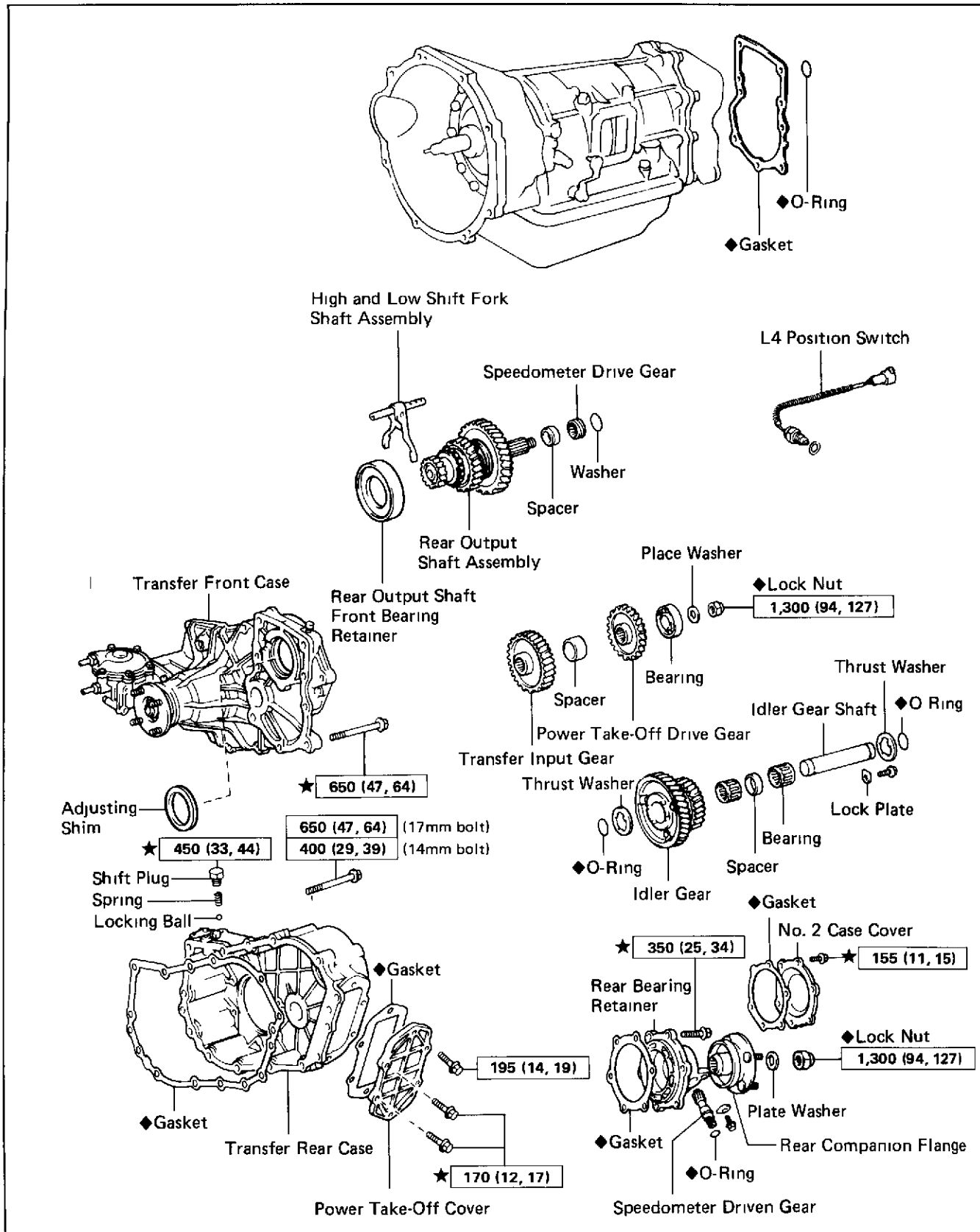

kg-cm (ft-lb, N·m) · Specified torque
◆ Non-reusable part
★ Precoated part

TF0830

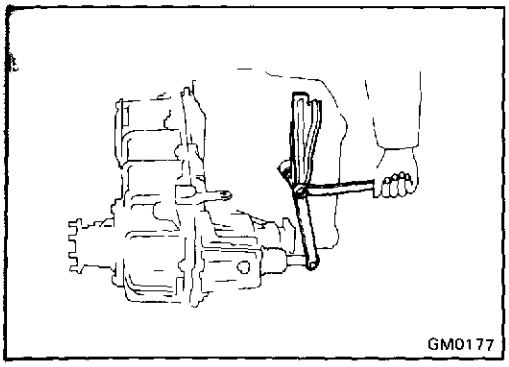
GM0177

DISASSEMBLY OF TRANSFER

(See page TF-4)

1. **(DIRECT SHIFT TYPE)**
   REMOVE TRANSFER FRONT DRIVE SHIFT LEVER
   (a) Remove the drive shift lever from transfer.
   (b) Remove the dust boot.

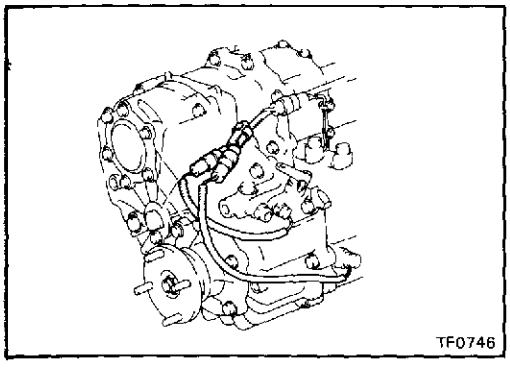
TF0746

(VACUUM SHIFT TYPE)
REMOVE TRANSFER L4 POSITION SWITCH
(a) Disconnect the two connectors.

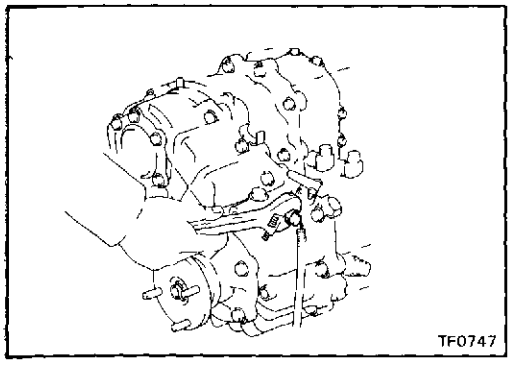
TF0747

(b) Remove the transfer L4 position switch.

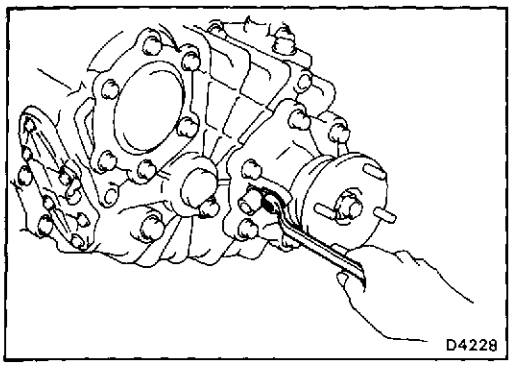
D4228

2. **REMOVE SPEEDOMETER DRIVEN GEAR**
   (a) Remove the bolt and lock plate.

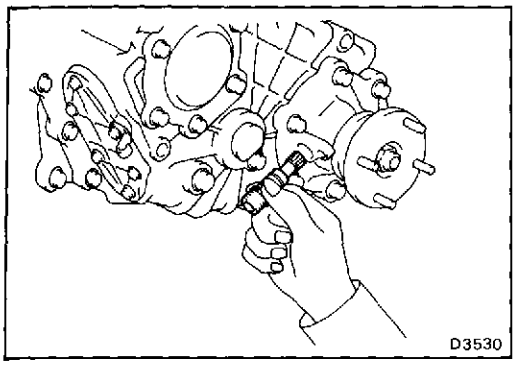
D3530

(b) Remove the speedometer driven gear.
(c) Remove the O-ring from the speedometer driven gear.

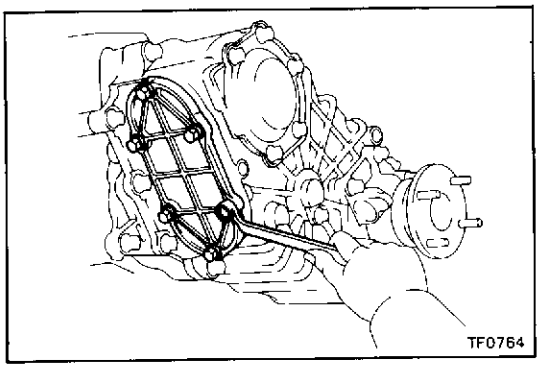

3. REMOVE POWER TAKE-OFF COVER

Remove the six bolts, and remove the power take- off cover and gasket.

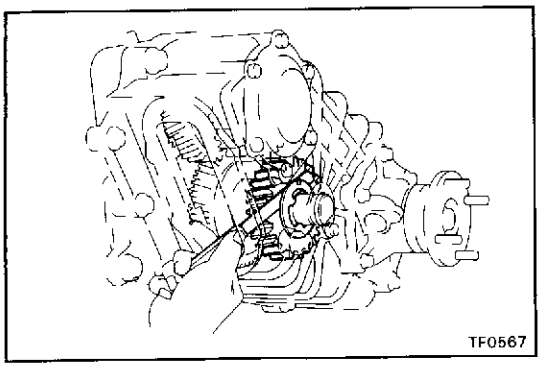

4. INSPECT IDLER GEAR THRUST CLEARANCE

Using a feeler gauge, measure the clearance between the idler gear and thrust washer.

Standard clearance: **0.275 — 0.625 mm (0.0110 — 0.0246 in.)**

Maximum clearance: **0.625 mm (0.0264 in.)**

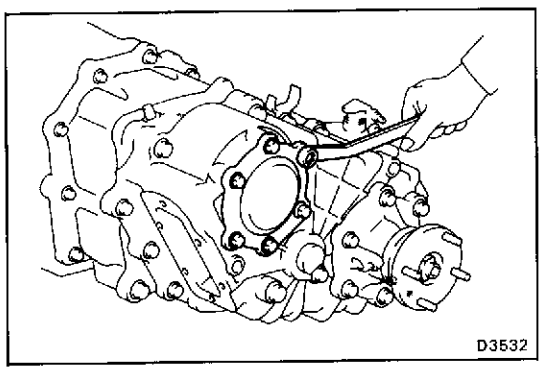

5. REMOVE TRANSFER NO.2 CASE COVER

Remove the six bolts, and remove transfer No.2 case cover and gasket.

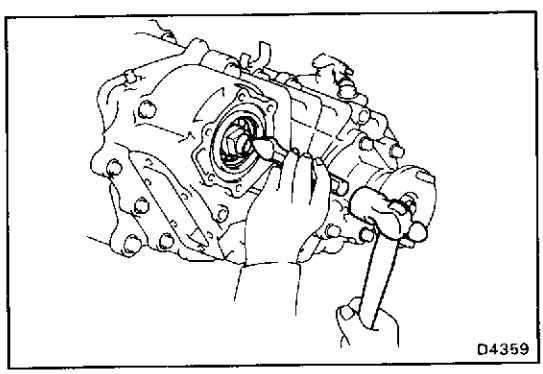

6. REMOVE TRANSMISSION OUTPUT SHAFT LOCK NUT

(a) Using a hammer and chisel, loosen the staked part of the nut.

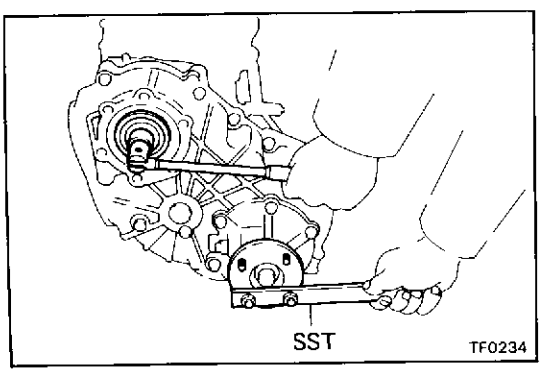

(b) Shift the outer lever of the transfer high and low shift lever to H2 or L4 position.

(c) Using SST and two nuts to hold the rear companion flange, remove the transmission output shaft lock nut and plate washer.

SST 09330-00021

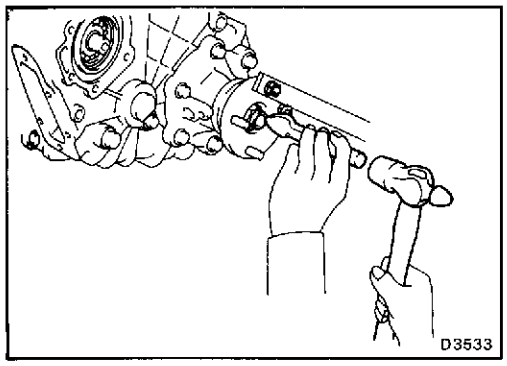

7. REMOVE REAR COMPANION FLANGE

(a) Using a hammer and chisel, loosen the staked part of the nut.

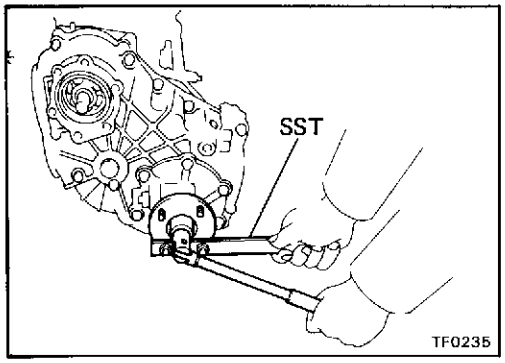

(b) Using SST and two nuts to hold the rear companion flange, remove the companion flange lock nut.

SST 09330-00021

(c) Remove the plate washer and companion flange

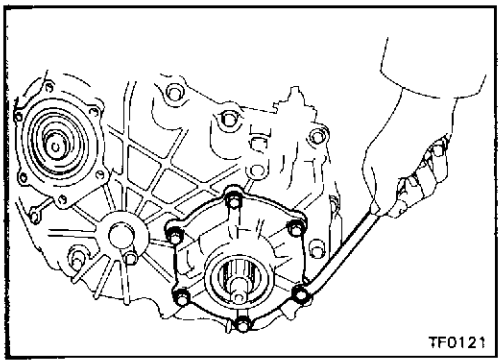

8. REMOVE REAR OUTPUT SHAFT REAR BEARING RETAINER

Remove the six bolts, and remove the rear output shaft bearing retainer and gasket.

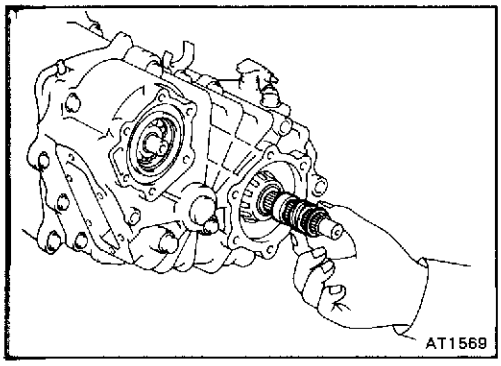

9. REMOVE WASHER, SPEEDOMETER DRIVE GEAR AND SPACER

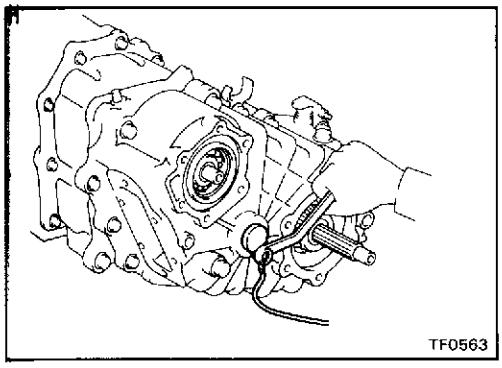

10. REMOVE IDLER GEAR SHAFT LOCK PLATE

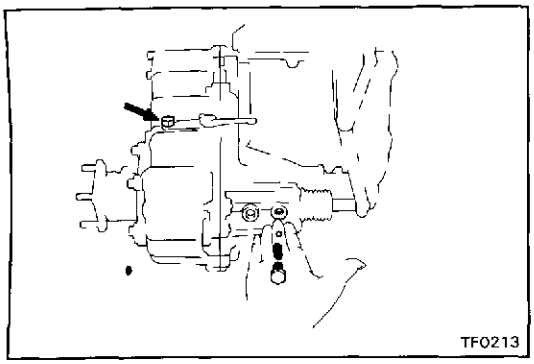

11. REMOVE SHIFT PLUGS, SPRINGS AND LOCKING BALLS
[Direct Shift Type]

Remove the shift plugs and, using a magnetic finger, remove the springs and locking balls.

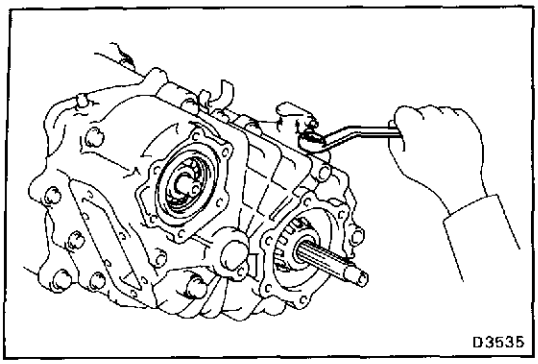

[Vacuum Shift Type]

Remove the shift plug, and using a magnetic finger, remove the spring and locking ball.

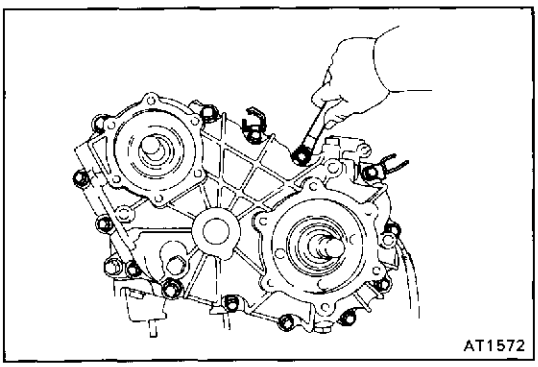

12. REMOVE TRANSFER REAR CASE

(a) Remove the fourteen bolts.

(b) Using a plastic hammer, remove the transfer rear case

(c) Remove the gasket from the transfer rear case.

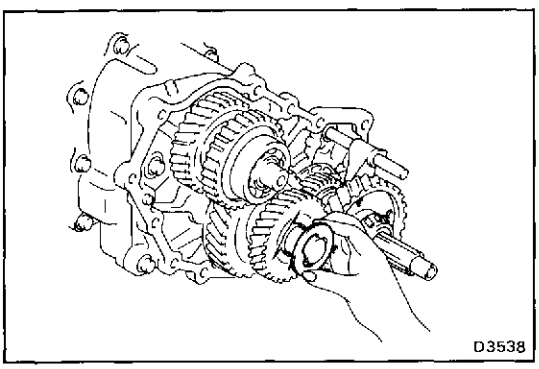

(d) Remove the thrust washer from the idler gear shaft

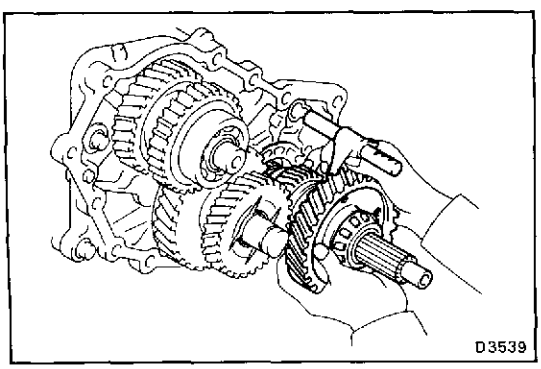

13. REMOVE REAR OUTPUT SHAFT ASSEMBLY WITH HIGH AND LOW SHIFT FORK SHAFT ASSEMBLY

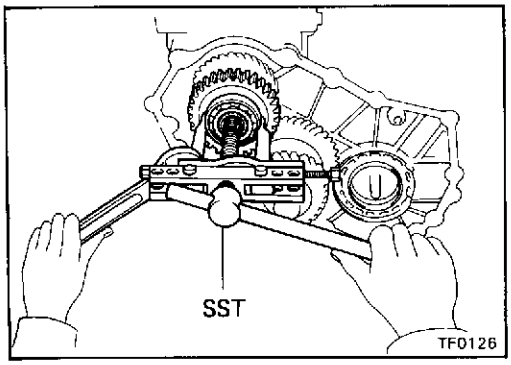

14. REMOVE POWER TAKE-OFF DRIVE GEAR

(a) Using SST, remove the transfer input gear bearing.

SST 09950-20017

(b) Remove the power take-off drive gear.

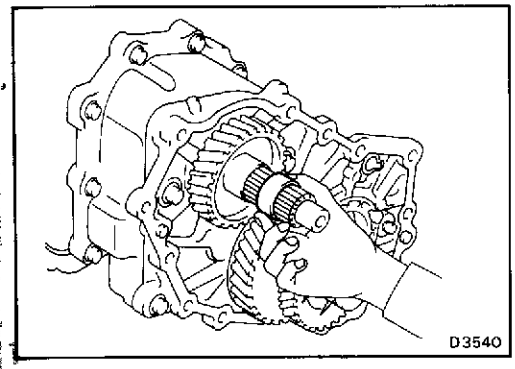

(c) Remove the spacer.

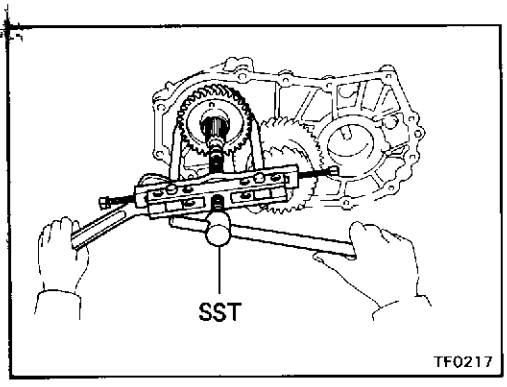

15. REMOVE TRANSFER INPUT GEAR

Using SST, remove the transfer input gear.

SST 09950-20017

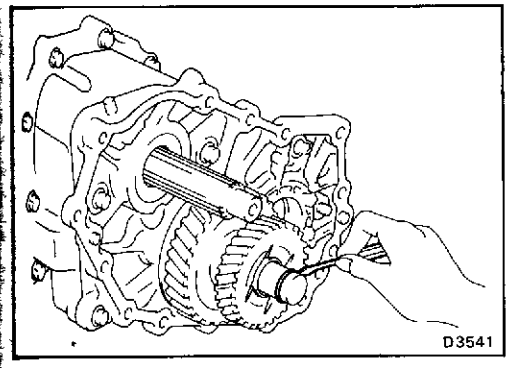

16. REMOVE IDLER GEAR AND IDLER GEAR SHAFT

(a) Remove the O-ring from the idler gear shaft.

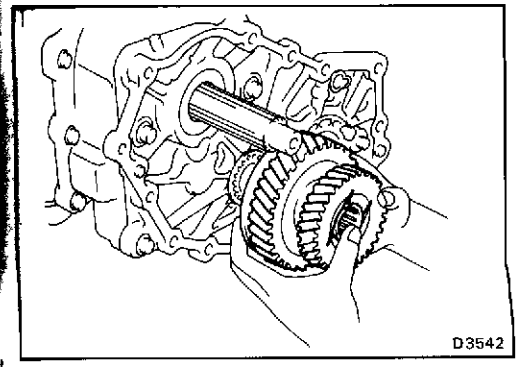

(b) Remove the idler gear with the two bearings and spacer.

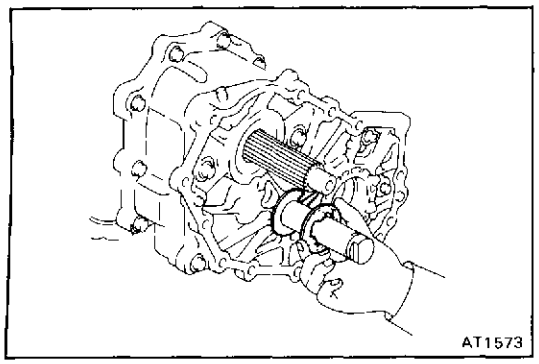

(c) Remove the thrust washer from idler gear shaft.

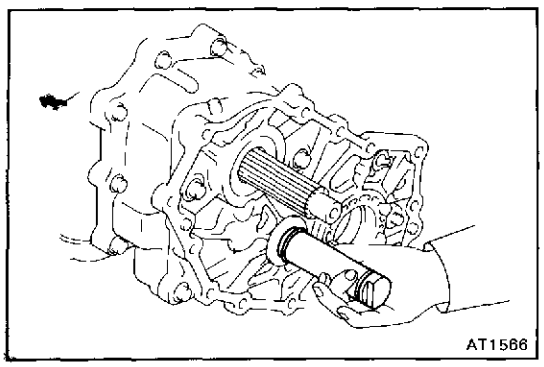

(d) Remove the idler gear shaft.

(e) Remove the O-ring from the idler gear shaft.

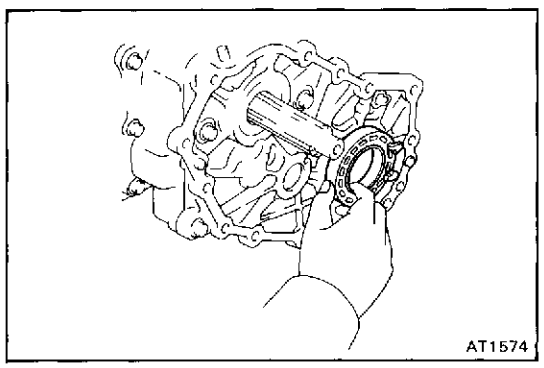

17. REMOVE REAR OUTPUT SHAFT FRONT BEARING RETAINER

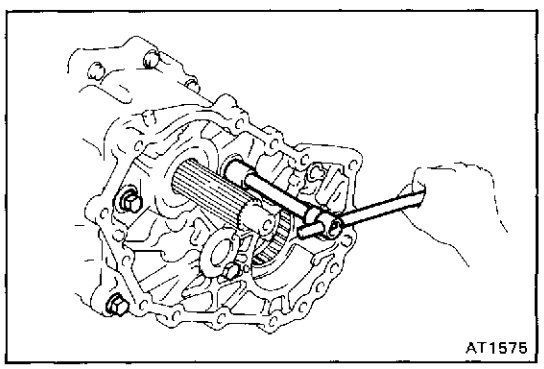

18. REMOVE TRANSFER FRONT CASE

(a) Remove the four bolts and using a plastic hammer, remove the transfer front case

(b) Remove the gasket and shim

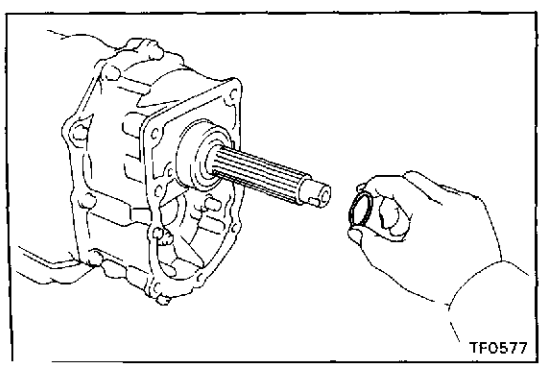

19. REMOVE O-RING FROM TRANSMISSION OUTPUT SHAFT

COMPONENT PARTS

Rear Output Shaft Assembly

COMPONENTS

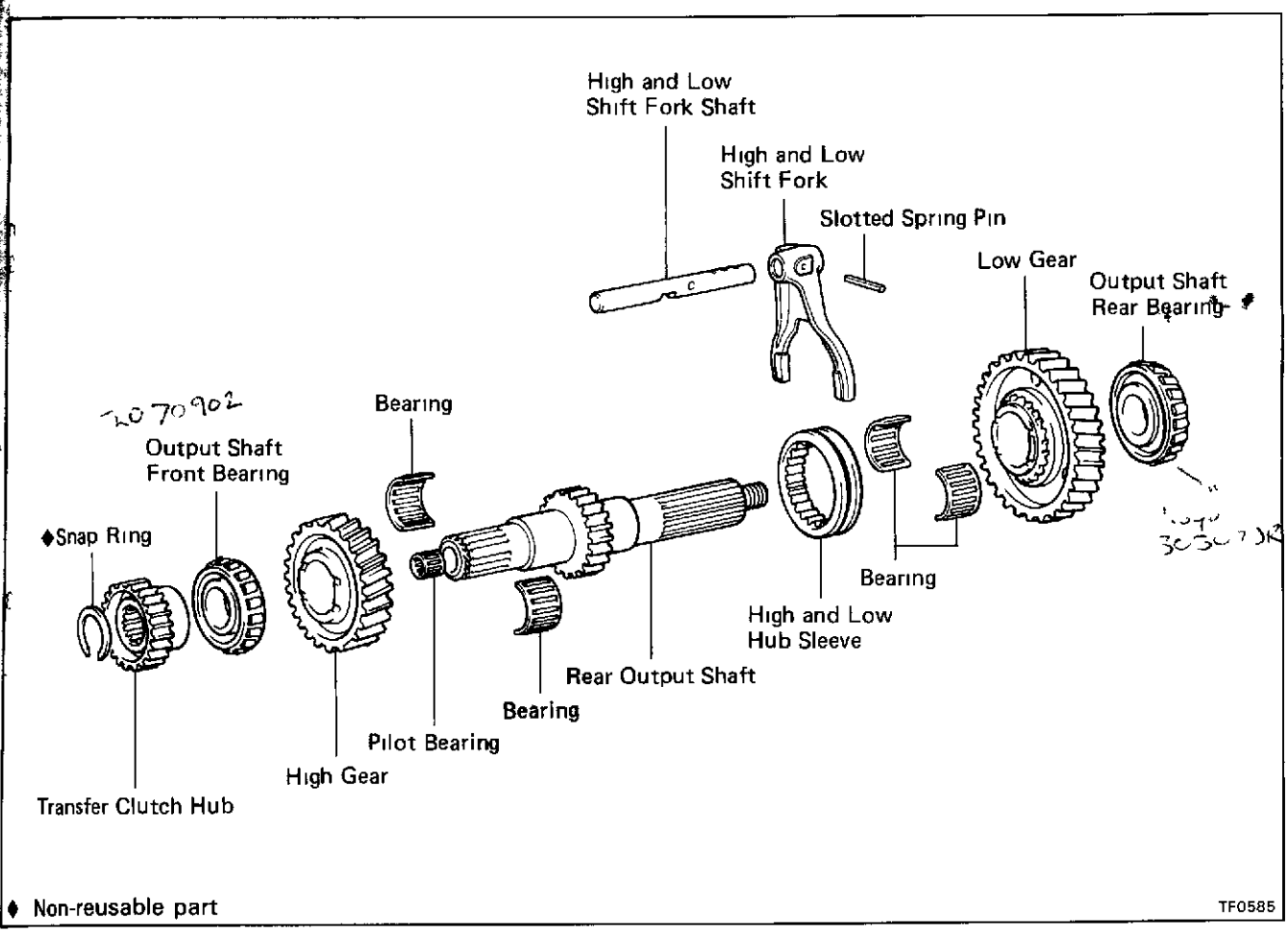

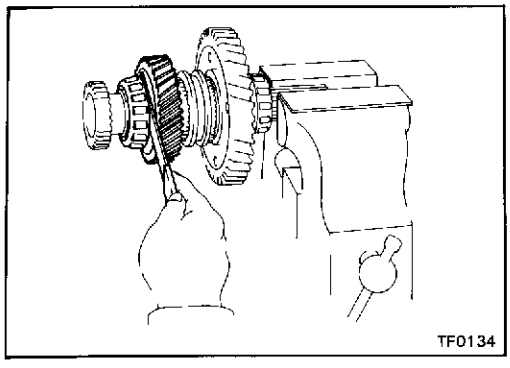

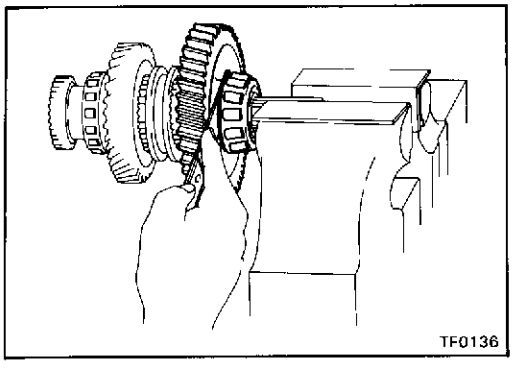

DISASSEMBLY OF REAR OUTPUT SHAFT ASSEMBLY

1. INSPECT THRUST CLEARANCES OF HIGH AND LOW GEARS

(a) Using a feeler gauge, measure the thrust clearance between the high gear and bearing

Standard clearance: **0.10 — 0.25 mm (0.0039 — 0.0098 in.)**

(b) Using a feeler gauge, measure the thrust clearance between the low gear and bearing.

Standard clearance: **0.10 — 0.25 mm (0.0039 — 0.0098 in.)**

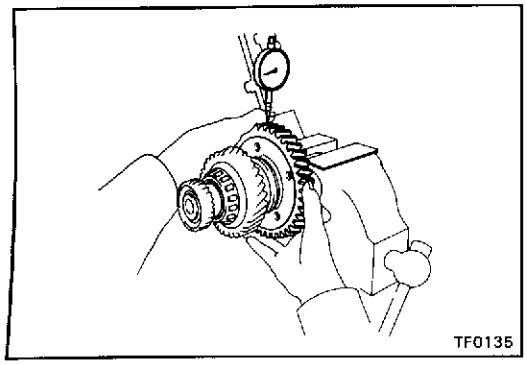
TF0135

2. INSPECT OIL CLEARANCES OF LOW AND HIGH GEARS

(a) Using a dial indicator, measure oil clearance between the low gear and shaft with the needle roller bearing installed.

Standard clearance: **0.019 — 0.068 mm (0.0007 — 0.0027 in.)**

Maximum clearance: **0.068 mm (0.0027 in.)**

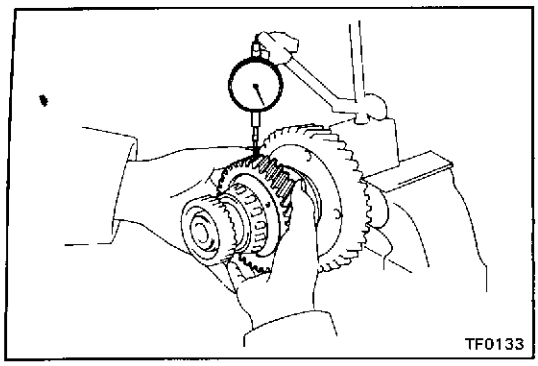
TF0133

(b) Using a dial indicator, measure oil clearance between the high gear and shaft with the needle roller bearing installed.

Standard clearance: **0.019 — 0.068 mm (0.0007 — 0.0027 in.)**

Maximum clearance: **0.068 mm (0.0027 in.)**

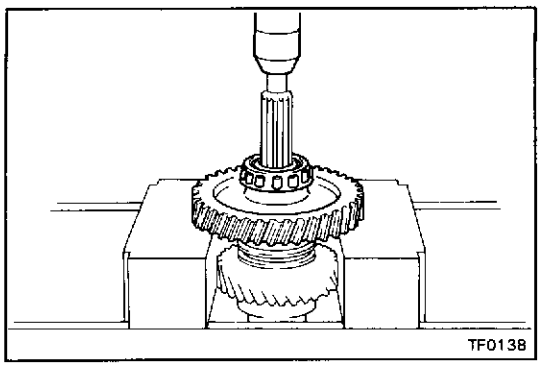
TF0138

3. REMOVE LOW GEAR, AND HIGH AND LOW CLUTCH HUB SLEEVE

(a) Using a press, press out the output shaft rear bearing and low gear.

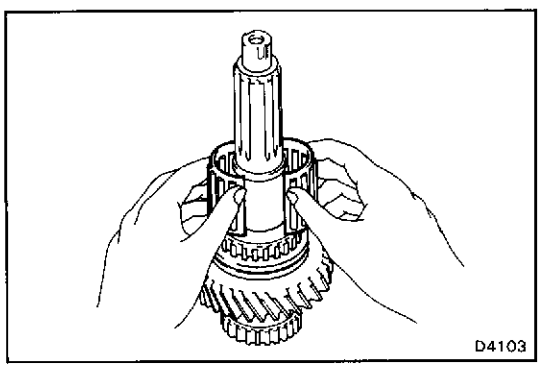
D4103

(b) Remove low gear bearings from the rear output shaft

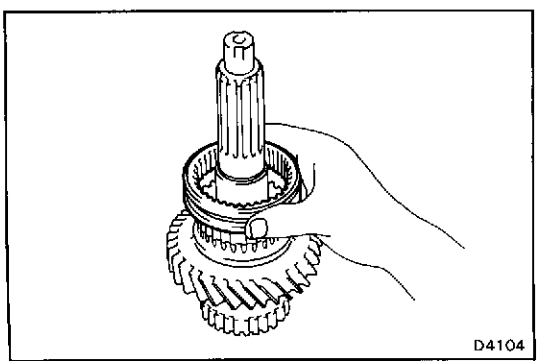
D4104

(c) Remove the high and low hub sleeve.

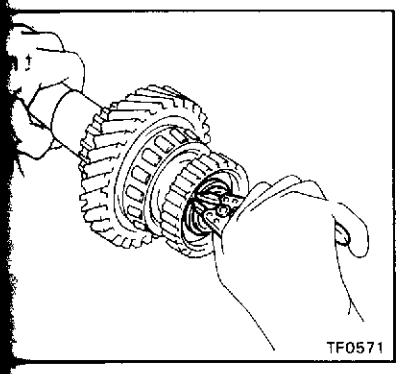

4. REMOVE TRANSFER CLUTCH HUB AND HIGH GEAR

(a) Using snap ring pliers, remove the snap ring.

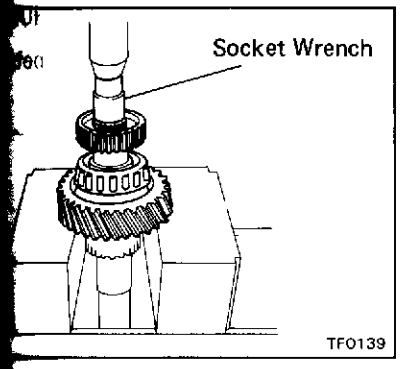

(b) Using a press and socket wrench, press out the transfer clutch hub, output shaft front bearing and high gear.

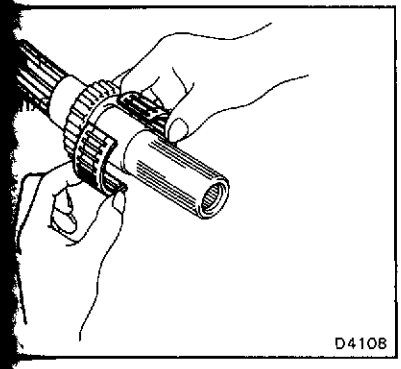

(c) Remove the high gear bearings from the rear output shaft.

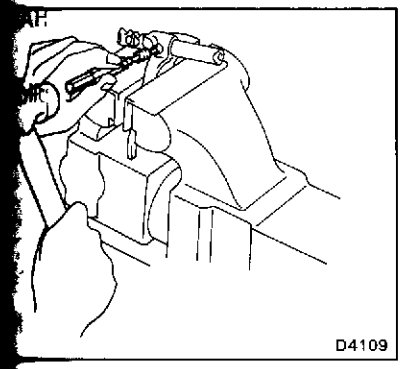

5. REMOVE HIGH AND LOW SHIFT FORK SHAFT

(a) Mount the high and low shift fork in a soft jaw vise.

(b) Using a pin punch and hammer, tap out the slotted spring pin.

(c) Remove the shift fork shaft from the shift fork

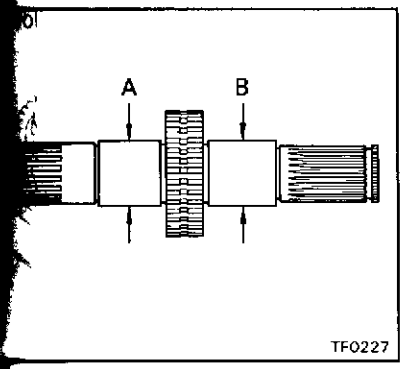

INSPECTION OF REAR OUTPUT SHAFT ASSEMBLY COMPONENTS

1. INSPECT REAR OUTPUT SHAFT

(a) Check the rear output shaft for wear or damage.

(b) Using a micrometer, measure the outer diameter of the rear output shaft journal surface.

Minimum outer diameter:

Part A 40.009 mm (1.5752 in.)
B 40.009 mm (1.5752 in.)

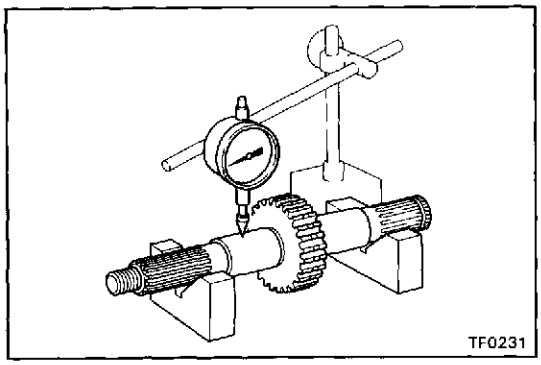

(c) Place the rear output shaft on V-blocks.

(d) Using a dial indicator, measure the shaft runout.

Maximum runout: 0.03 mm (0.0012 in.)

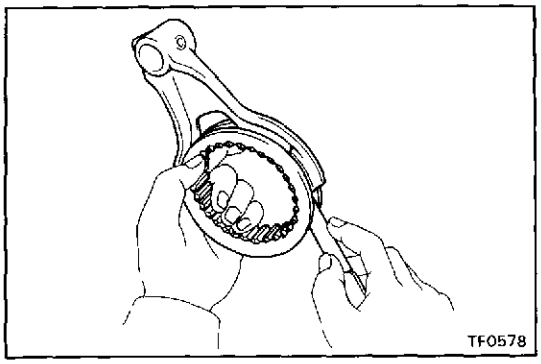

2. INSPECT CLEARANCE OF SHIFT FORK AND HUB SLEEV

Using a feeler gauge, measure the clearance between th hub sleeves and shift fork.

Maximum clearance: 1.0 mm (0.039 in.)

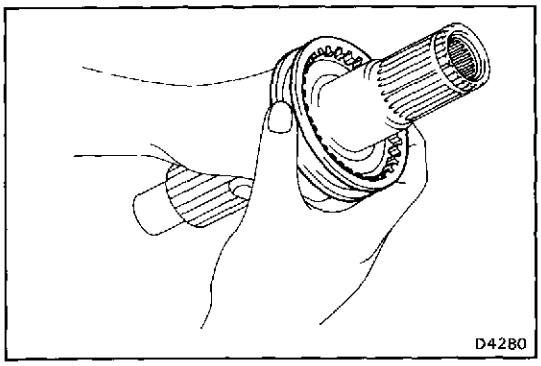

3. INSPECT HIGH AND LOW HUB SLEEVE

(a) Install the hub sleeve to the rear output shaft.

(b) Check that the hub sleeve moves smoothly

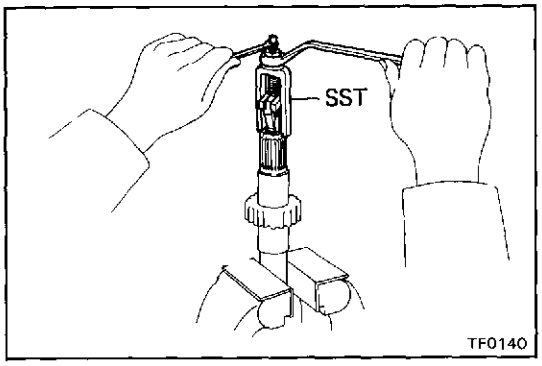

4. IF NECESSARY, REPLACE REAR OUTPUT SHAFT PIL(BEARING

(a) Using SST, remove the rear output shaft pilot bearir

SST 09319-60020

HINT: The bearing will break

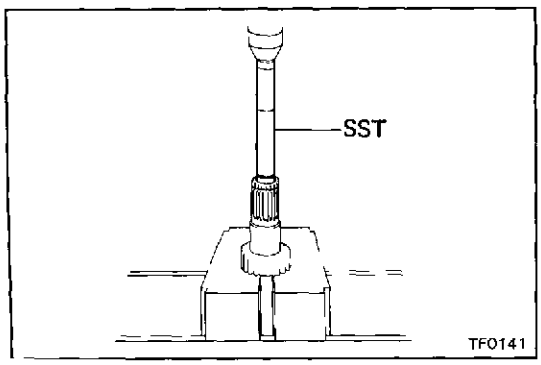

(b) Using SST and a press, press in a new pilot bearii

SST 09608-20012 (09608-03020)

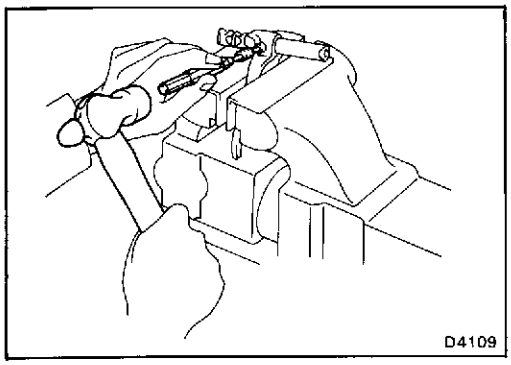

ASSEMBLY OF REAR OUTPUT SHAFT ASSEMBLY

1. INSTALL HIGH AND LOW SHIFT FORK SHAFT

(a) Mount the high and low shift fork in a soft jaw vise.

(b) Install the shift fork shaft into the shift fork.

(c) Using a pin punch and hammer, tap in the slotted spring pin.

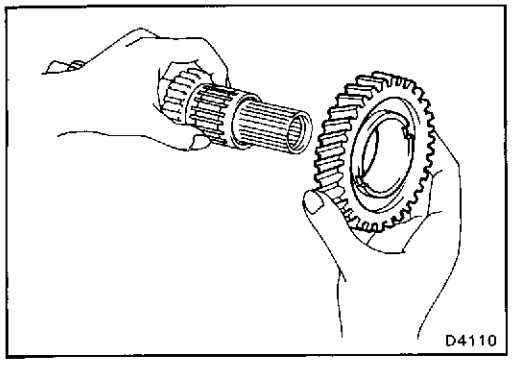

2. INSTALL HIGH GEAR AND TRANSFER CLUTCH HUB

(a) Apply MP grease to the high gear bearings.

(b) Install high gear bearings and high gear.

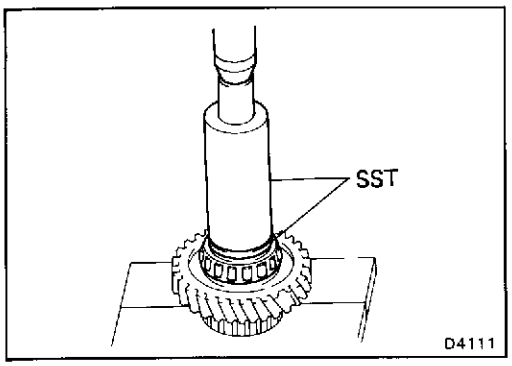

(c) Using SST and a press, press in the output shaft front bearing.

SST 09316-60010 (09316-00010, 09316-00070)

HINT: Replace both the bearing and the outer race as a set

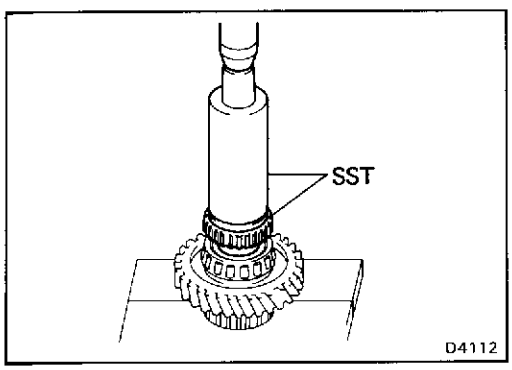

(d) Using SST and a press, press in the clutch hub.

SST 09316-60010 (09316-00010, 09316-00070)

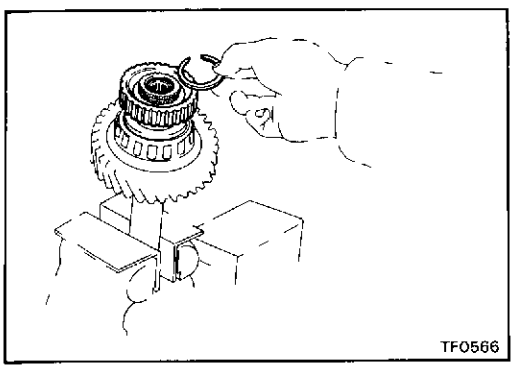

3. INSTALL SNAP RING

(a) Select a snap ring that will allow minimum axial play.

Mark	Thickness mm (in.)
11	2.30 — 2.35 (0.0906 — 0.0925)
17	2.60 — 2.65 (0.1024 — 0.1043)

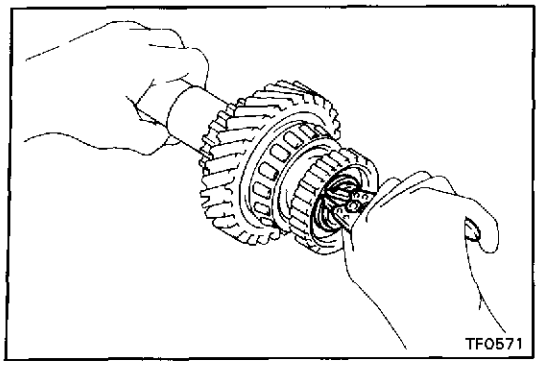

(b) Using snap ring pliers, install a new snap ring.

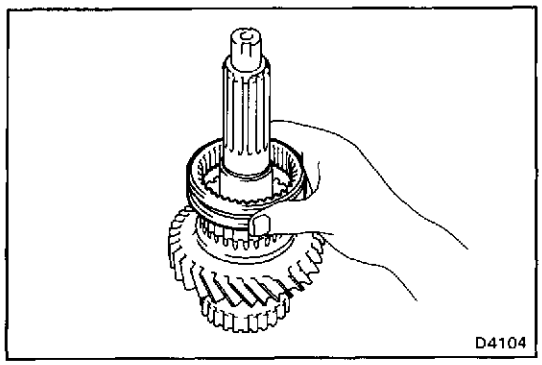

4. INSTALL LOW GEAR TO REAR OUTPUT SHAFT

(a) Install the high and low hub sleeve.

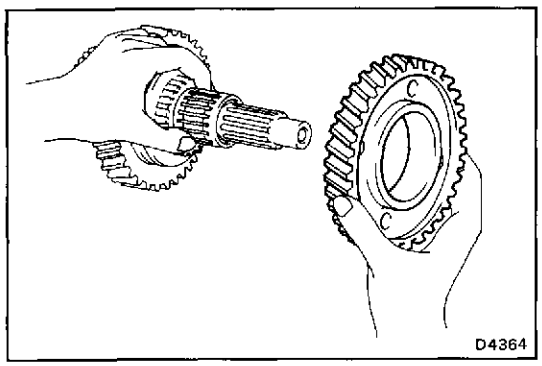

(b) Apply MP grease to the low gear bearings.

(c) Install low gear bearings and low gear.

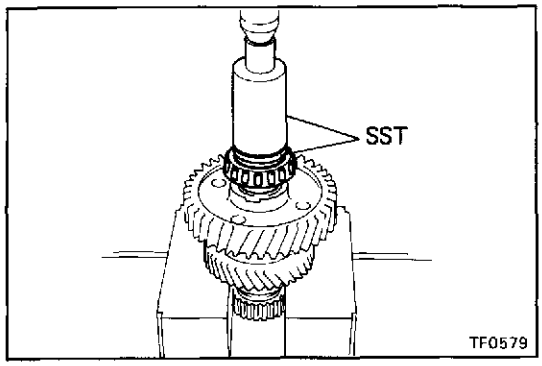

(d) Using SST and a press, press in the output shaft rear bearing.

SST 09316-60010 (09316-00010, 09316-00070)

HINT: Replace both the bearing and the outer race as a set.

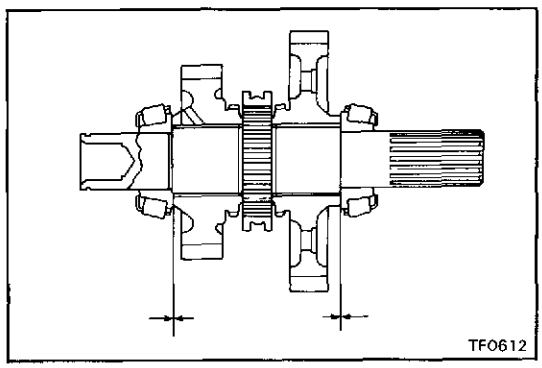

5. INSPECT THRUST CLEARANCES OF HIGH AND LOW GEARS

(a) Using a feeler gauge, measure the thrust clearance between the high gear and bearing.

Standard clearance: 0.10 — 0.25 mm (0.0039 — 0.0098 in.)

Maximum clearance: 0.25 mm (0.0098 in.)

(b) Using a feeler gauge, measure the thrust clearance between the low gear and bearing.

Standard clearance: 0.10 — 0.25 mm (0.0039 — 0.0098 in.)

Maximum clearance: 0.25 mm (0.0098 in.)

Idler Gear

COMPONENTS

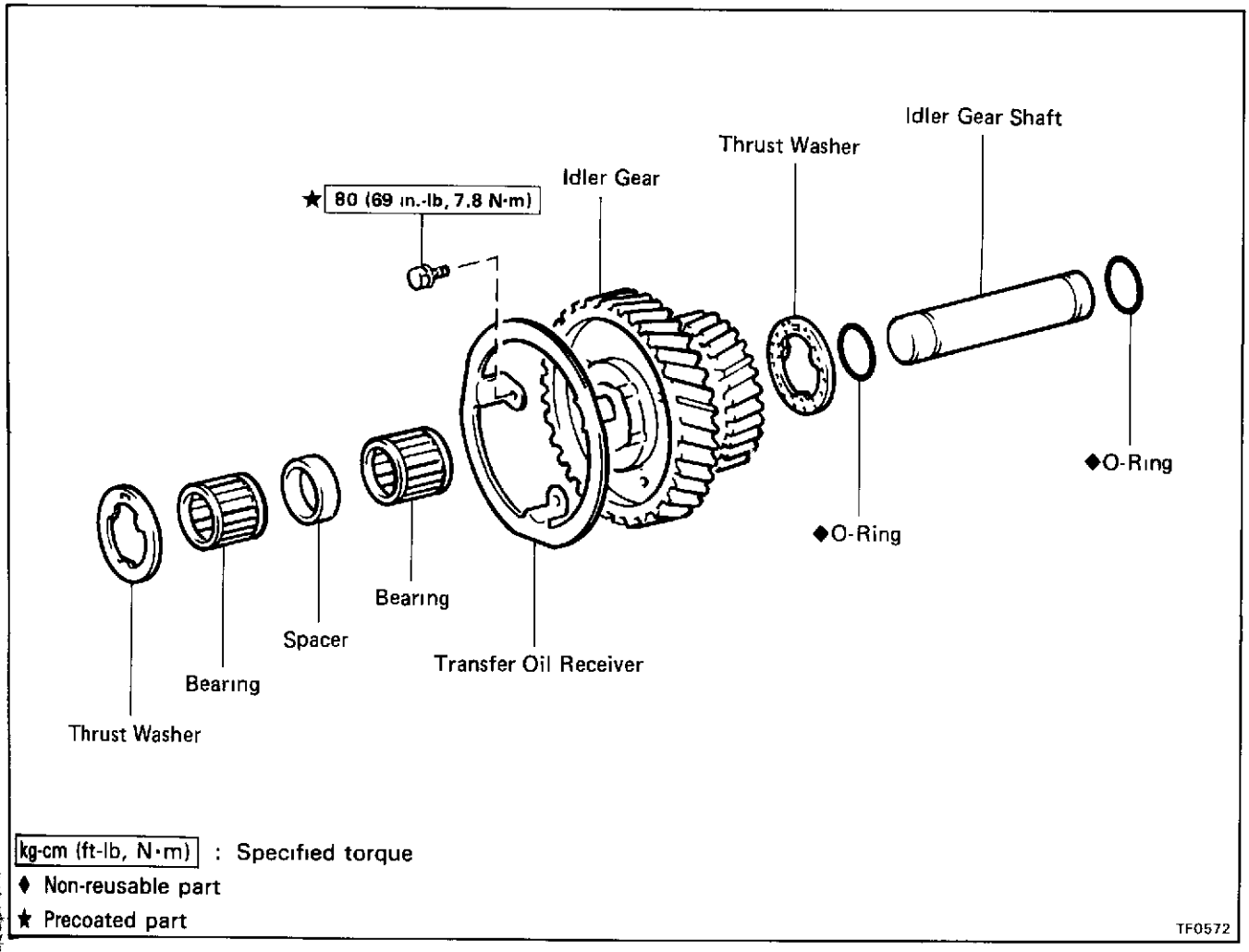

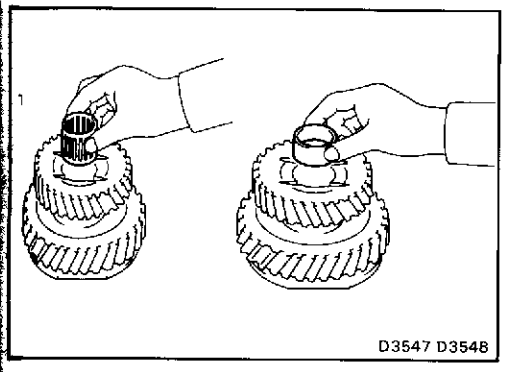

DISASSEMBLY OF IDLER GEAR

1. REMOVE TWO BEARINGS AND SPACER

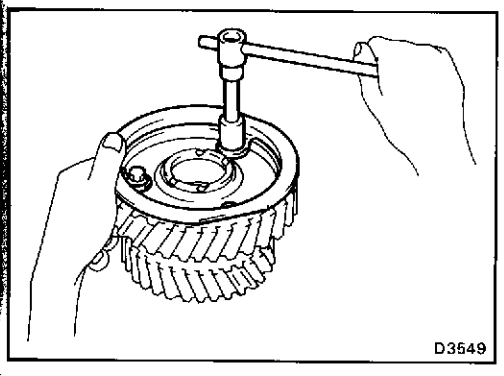

2. REMOVE TRANSFER OIL RECEIVER

Remove the three bolts and transfer oil receiver from the idler gear.

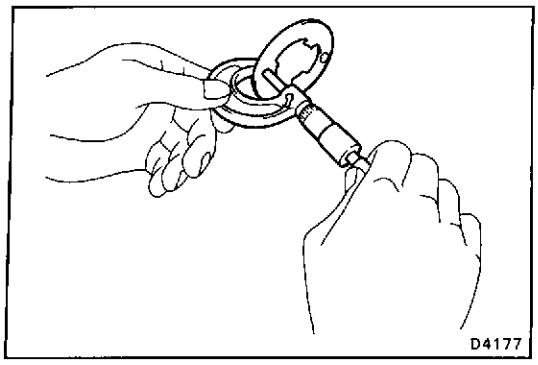
D4177

INSPECTION OF IDLER GEAR COMPONENT

INSPECT THRUST WASHER

Using a micrometer, measure the thrust washer thickness

Standard thickness: **1.95 – 2.05 mm (0.077 – 0.081 in.)**

Minimum thickness: **1.65 mm (0.065 in.)**

If the thickness is less than minimum, replace the thrust washer.

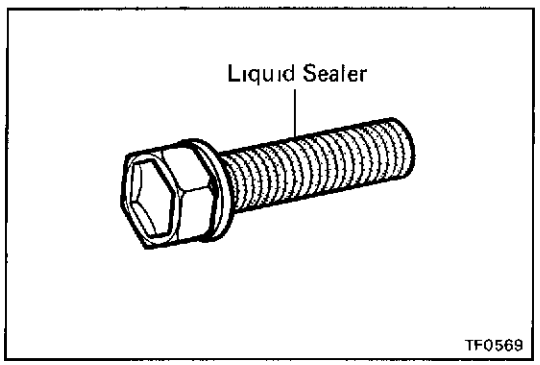

TF0569

ASSEMBLY OF IDLER GEAR

1. INSTALL TRANSFER OIL RECEIVER

(a) Clean the threads of the bolts and case with cleaner

(b) Apply liquid sealer to the bolt threads.

Sealant: **Part No.08833-00070, THREE BOND 1324 or equivalent**

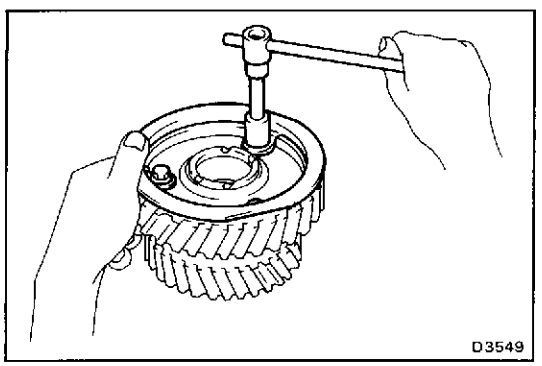
D3549

(c) Install the transfer oil receiver with the three bolts.

Torque: **80 kg-cm (69 ft-lb, 7.8 N·m)**

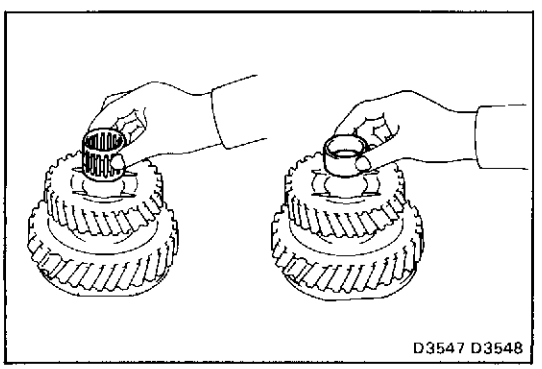
D3547 D3548

2. INSTALL TWO BEARINGS AND SPACER

(a) Apply MP grease to the two bearings.

(b) Install the two bearings and spacer to the idler gear.

Rear Output Shaft Bearing Retainers

COMPONENTS

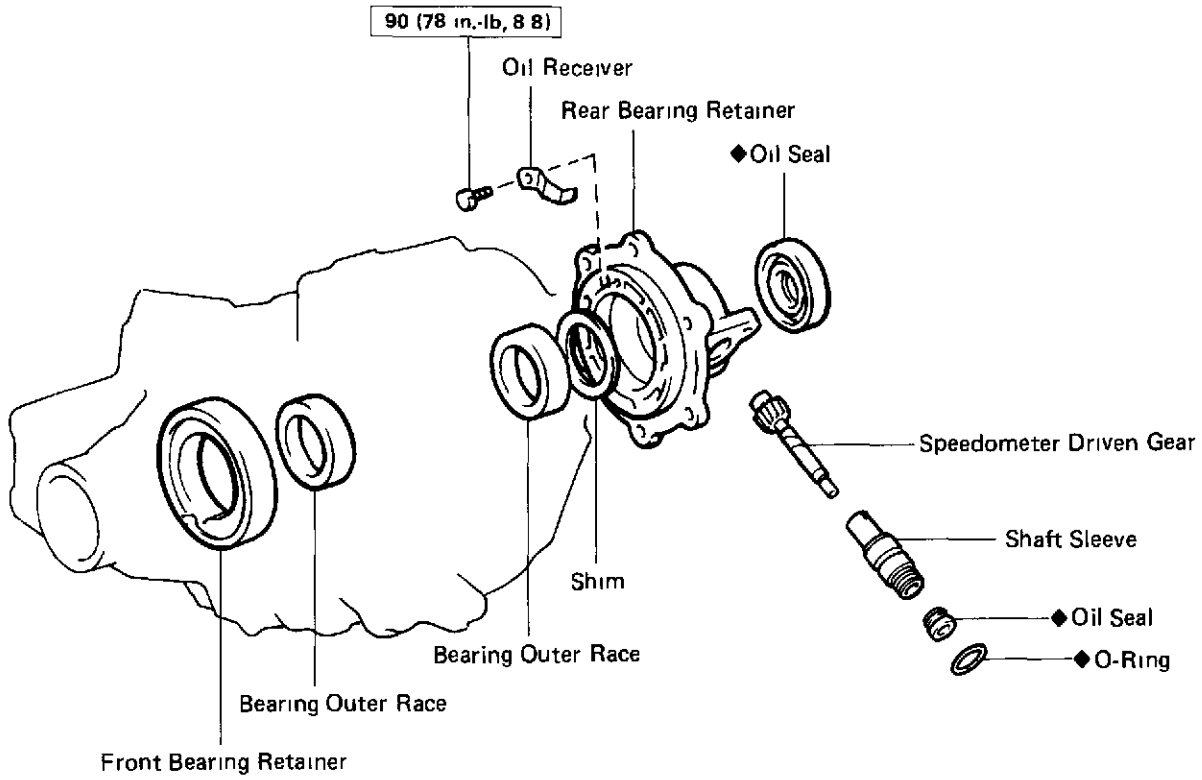

kg-cm (ft-lb, N·m) : Specified torque
◆ Non-reusable part

TF0584

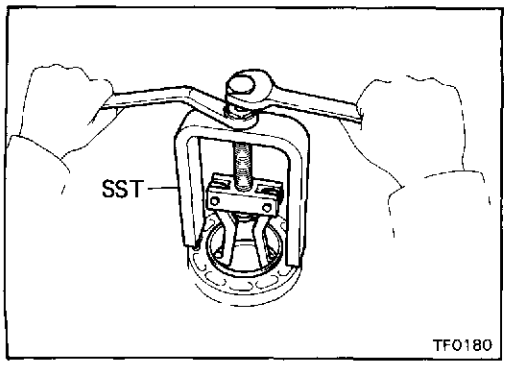

TF0180

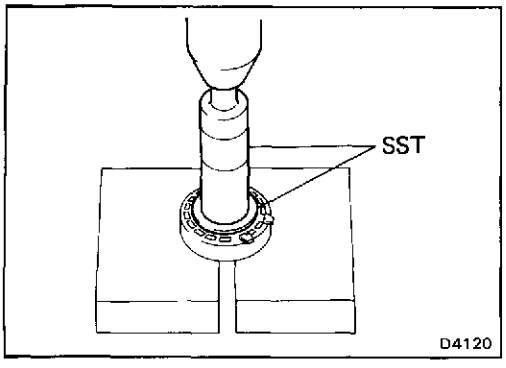

D4120

INSPECTION AND REPAIR OF REAR OUTPUT SHAFT BEARING RETAINERS

1. **IF NECESSARY, REPLACE REAR OUTPUT SHAFT FRONT BEARING OUTER RACE**

   (a) Using SST, remove the outer race of the front bearing retainer.

   SST 09514-35011

   (b) Using SST and a press, press a new outer race into the front bearing retainer.

   SST 09316-60010 (09316-00010, 09316-00040)

   HINT: Replace both the outer race and the bearing as a set.

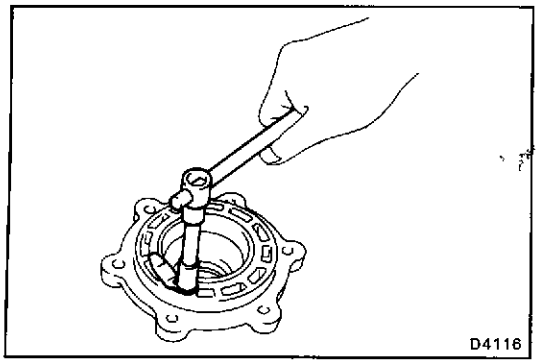

2. IF NECESSARY, REPLACE REAR OUTPUT SHAFT REA BEARING OUTER RACE

(a) Remove the bolt and oil receiver from the rear bea ing retainer.

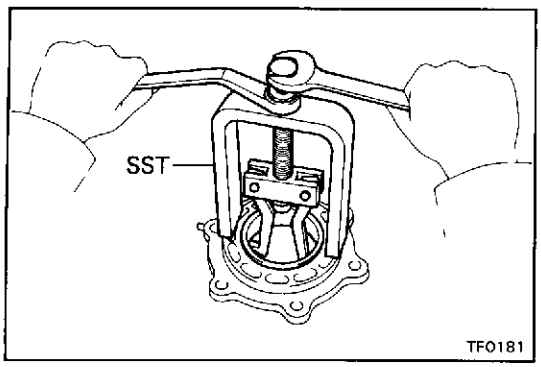

(b) Using SST, remove the bearing outer race and shi from the rear bearing retainer.

SST 09514-35011

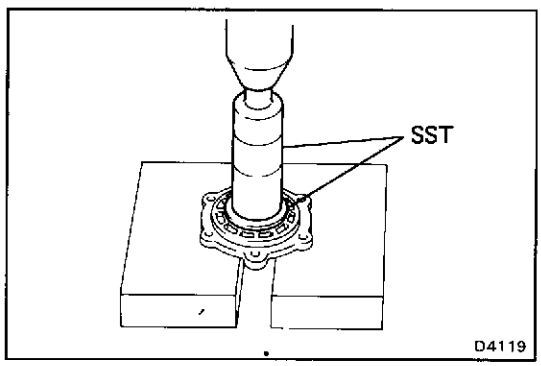

(c) Install the shim into the rear bearing retainer.

HINT: Reinstall the removed shim.

(d) Using SST, press a new rear outer race into the rea bearing retainer.

SST 09316-60010 (09316-00010, 09316-00030)

HINT: Replace both the outer race and the bearing as set

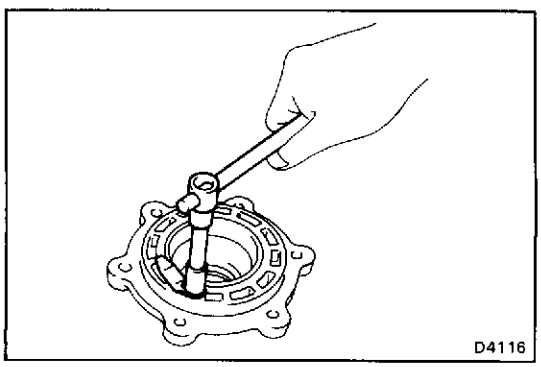

(e) Install the oil receiver to the rear bearing retainer wit the bolt.

Torque: 90 kg-cm (78 in.-lb, 8.8 N·m)

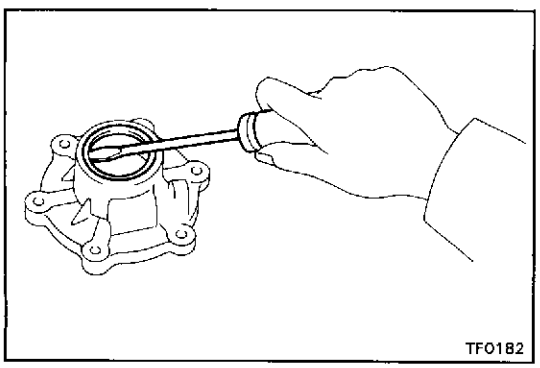

3. IF NECESSARY, REPLACE REAR OUTPUT SHAFT OIL SEA

(a) Using a screwdriver, remove the oil seal.

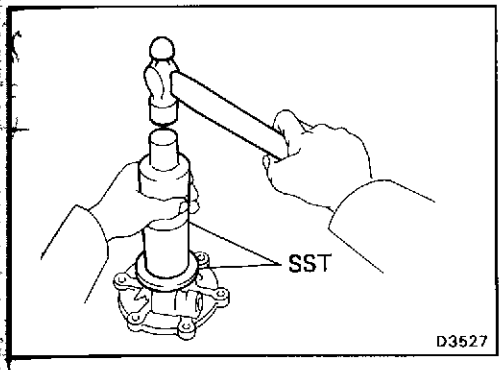

(b) Using SST and a hammer, tap in a new oil seal.
SST 09316-60010 (09316-00010, 09316-00060)
(c) Apply MP grease to oil seal lip.

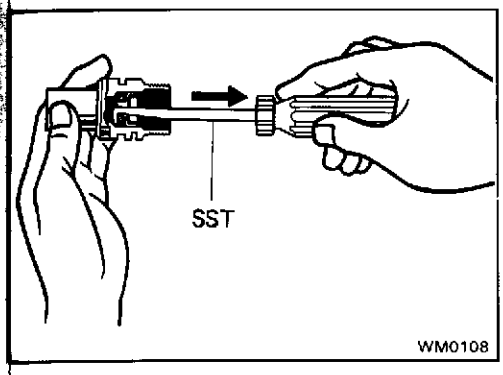

4. IF NECESSARY, REPLACE SPEEDOMETER DRIVEN GEAR OIL SEAL

(a) Using SST, pull out the oil seal.
SST 09921-00010

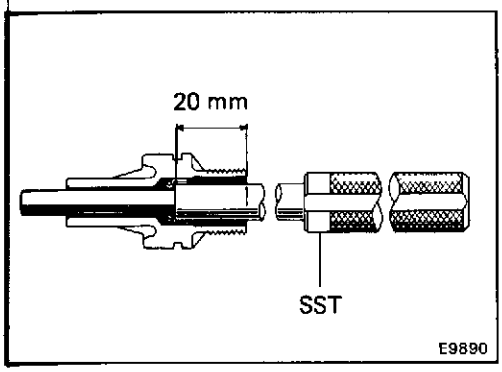

(b) Using SST, tap a new oil seal into the sleeve
SST 09201-60011
Oil seal depth: 20 mm (0.79 in.)

Transfer Front Case

COMPONENTS

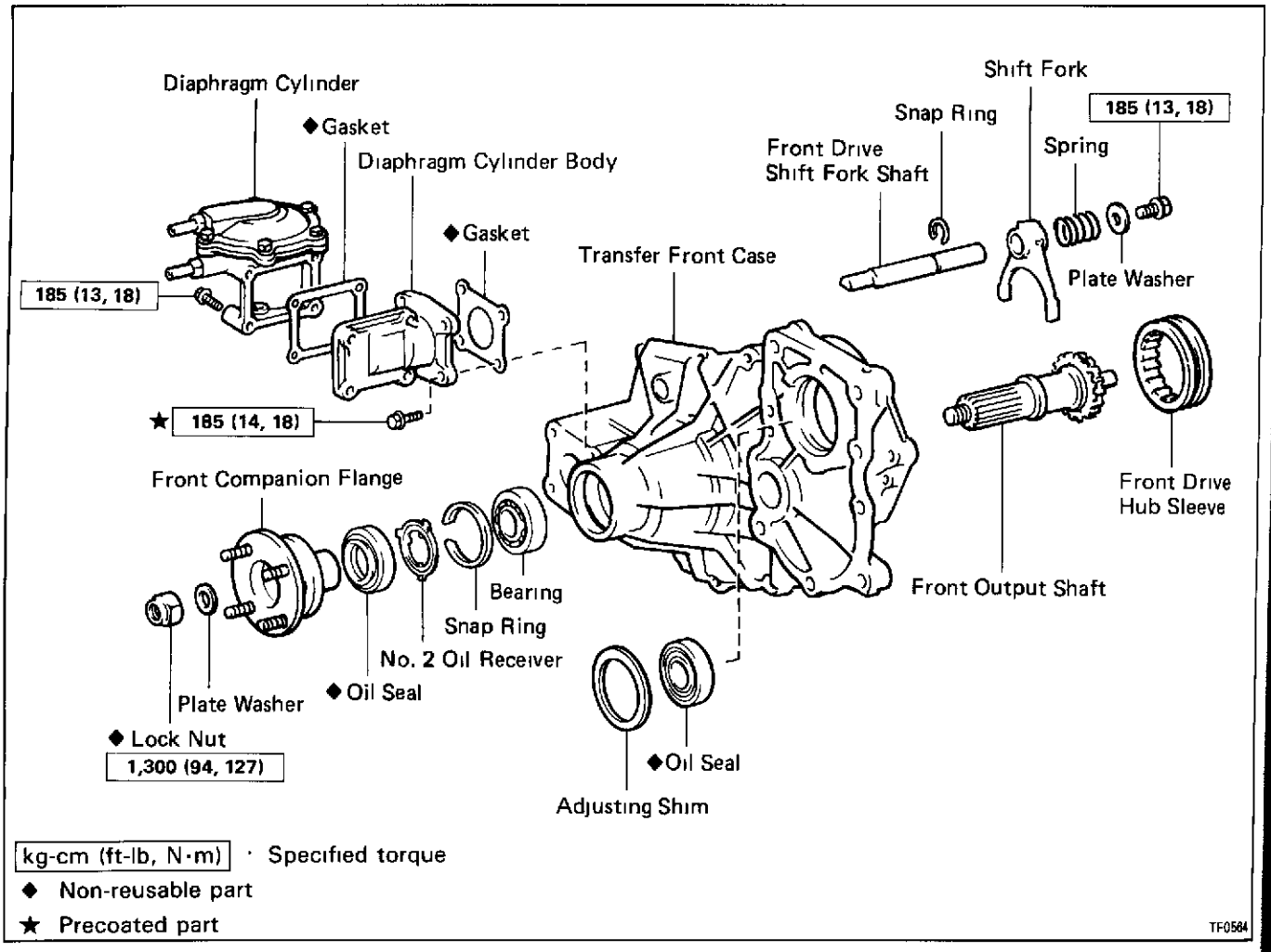

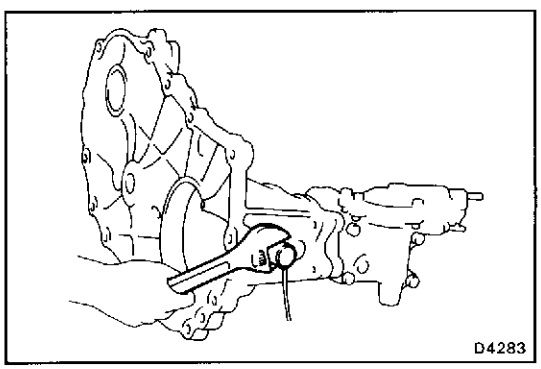

DISASSEMBLY OF TRANSFER FRONT CASE

1. REMOVE 4WD INDICATOR SWITCH

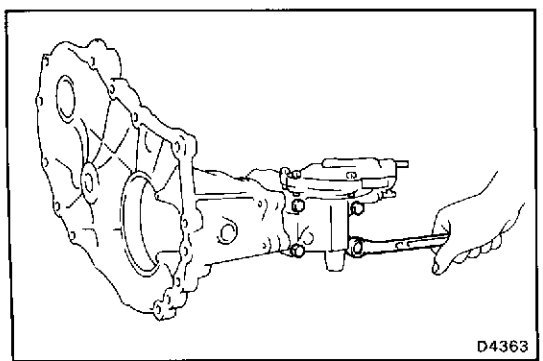

2. [VACUUM SHIFT TYPE] REMOVE DIAPHRAGM CYLINDER ASSEMBLY

(a) Remove the four bolts, diaphragm cylinder and gasket.

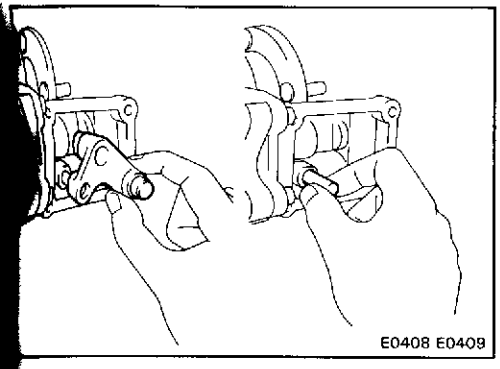

(b) Remove the shift link lever and straight pin.

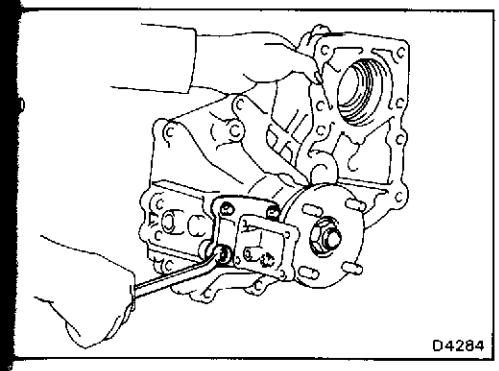

(c) Remove the four bolts, diaphragm cylinder body and gasket.

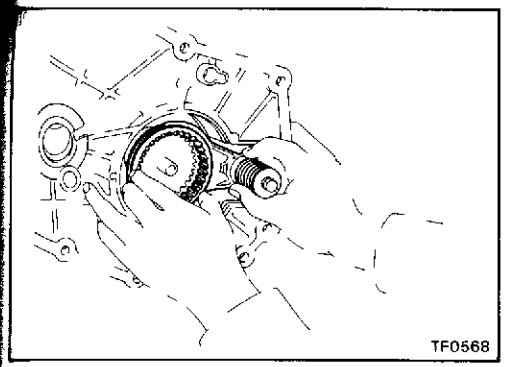

3. REMOVE FRONT DRIVE HUB SLEEVE

Remove the hub sleeve with front drive shift fork shaft assembly.

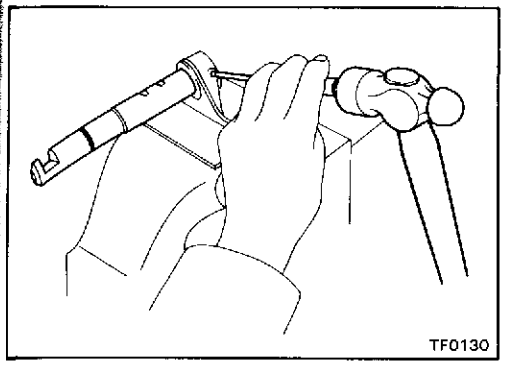

4. REMOVE FRONT DRIVE SHIFT FORK SHAFT

[Direct Shift Type]

(a) Mount the front drive shift fork shaft in a soft jaw vise.

(b) Using a pin punch and hammer, drive out the slotted spring pin.

(c) Remove the shift fork from the shift fork shaft.

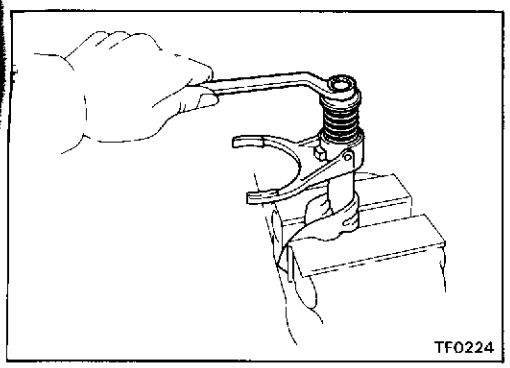

[Vacuum Shift Type]

(a) Remove the bolt, plate washer, spring and shift fork from the shift fork shaft.

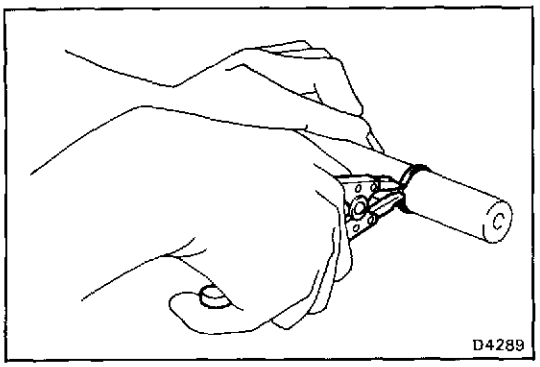

(b) Using snap ring pliers, remove the snap ring.

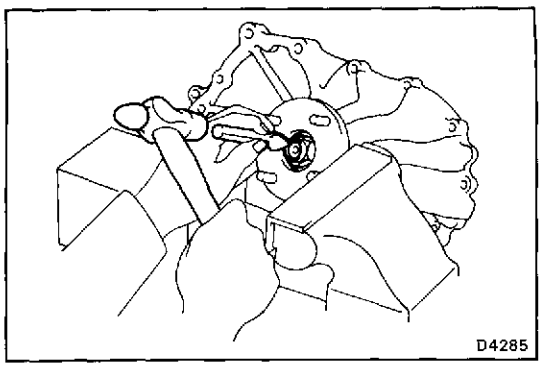

5. REMOVE FRONT COMPANION FLANGE

(a) Mount the companion flange in a vise

(b) Using a hammer and chisel, loosen the staked part of the nut.

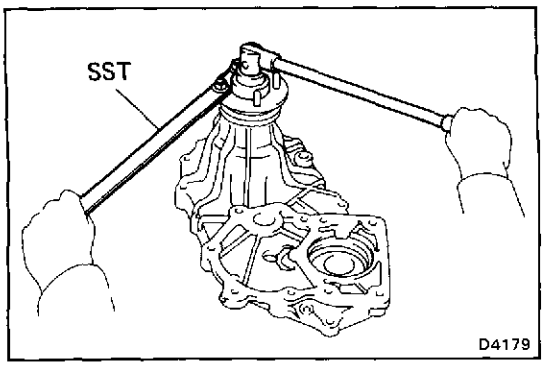

(c) Using SST and two nuts to hold the front companion flange, remove the companion flange lock nut.

SST 09330-00021

(d) Remove the plate washer and companion flange

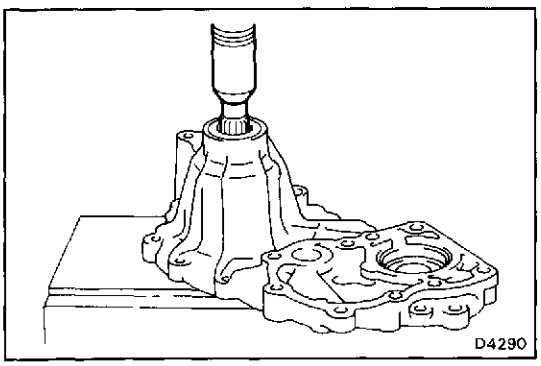

6. REMOVE FRONT OUTPUT SHAFT

Using a press, press out the front output shaft.

INSPECTION OF TRANSFER FRONT CASE

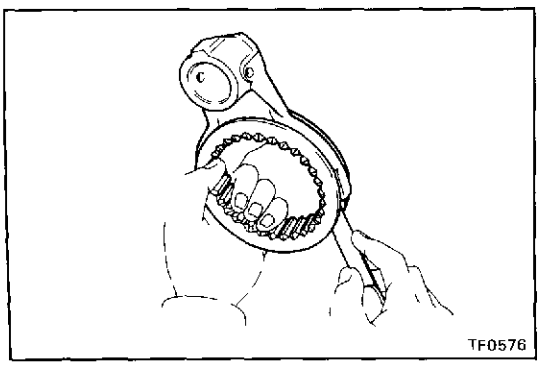

1. INSPECT CLEARANCE OF SHIFT FORK AND HUB SLEEVE

Using a feeler gauge, measure the clearance between the hub sleeve and shift fork.

Maximum clearance: 1.0 mm (0.039 in.)

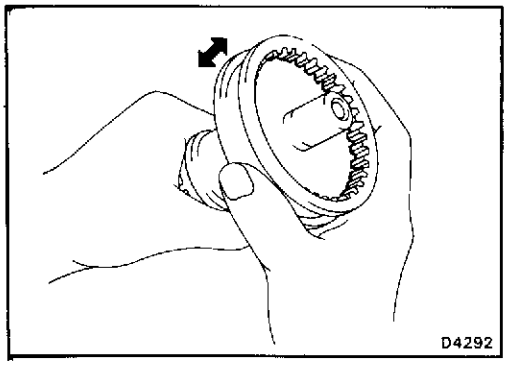

2. INSPECT FRONT DRIVE CLUTCH HUB SLEEVE

(a) Install the clutch hub sleeve to the front output shaft.

(b) Check that the hub sleeve moves smoothly.

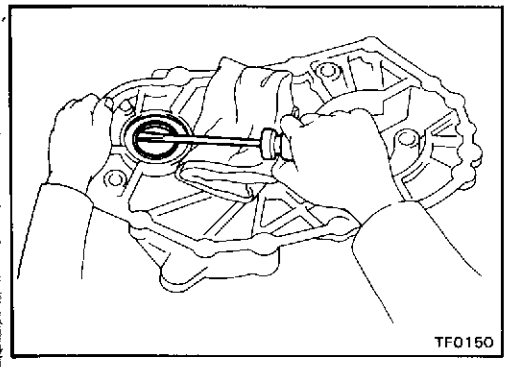

3. IF NECESSARY, REPLACE TRANSMISSION REAR OIL SEAL

(a) Using a screwdriver, remove the oil seal.

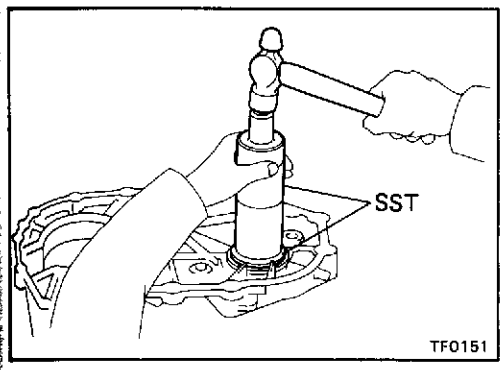

(b) Using SST and a hammer, tap in a new oil seal.

SST 09316-60010 (09316-00010, 09316-00030)

(c) Apply MP grease to the oil seal lip.

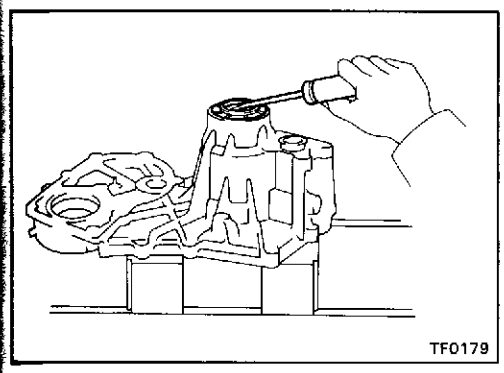

4. IF NECESSARY, REPLACE FRONT OUTPUT SHAFT OIL SEAL

(a) Using a screwdriver, remove the oil seal.

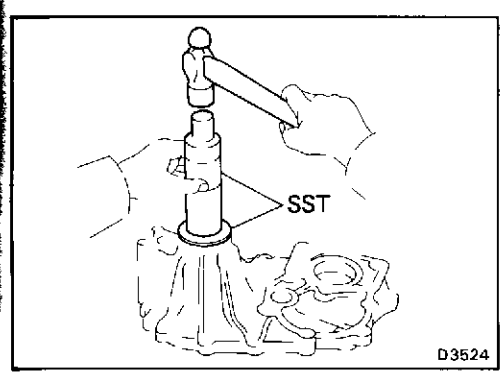

(b) Using SST and a hammer, tap in a new oil seal.

SST 09316-60010 (09316-00010, 09316-00060)

(c) Apply MP grease to the oil seal lip.

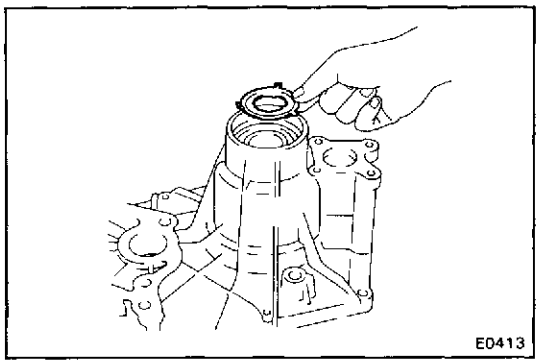

5. IF NECESSARY, REPLACE FRONT OUTPUT SHAFT BEARING

(a) Remove the front output shaft oil seal

(b) Remove the No.2 oil receiver.

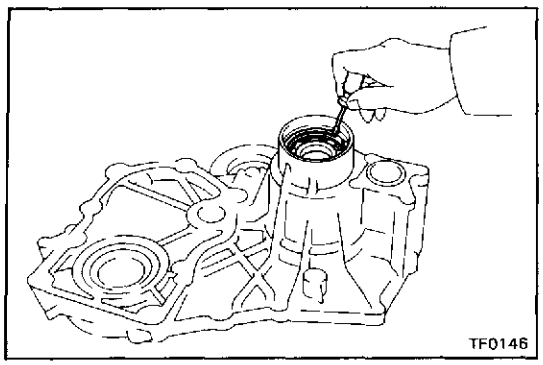

(c) Using a screwdriver, remove the snap ring.

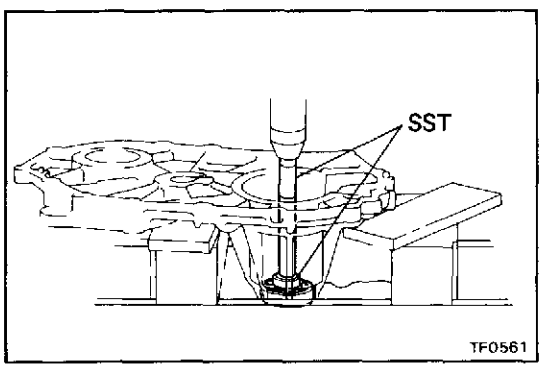

(d) Using SST and a press, press out the bearing.
SST 09608-20012 (09608-00040, 09608-03020)

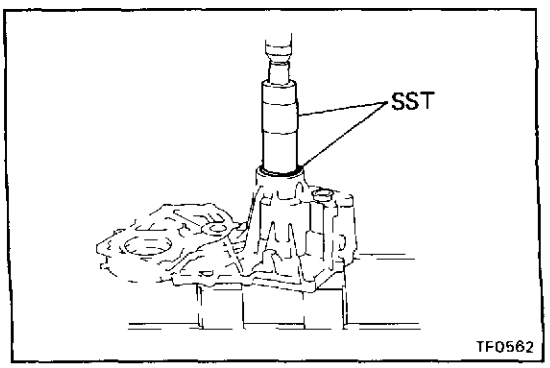

(e) Using SST and a press, press in a new bearing.
SST 09316-60010 (09316-00010, 09316-00020)

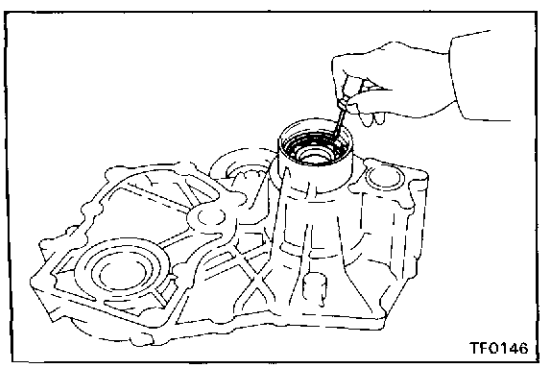

(f) Install the snap ring.

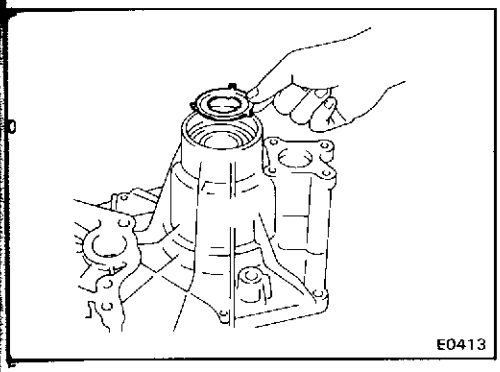

(g) Install the No 2 oil receiver.

(h) Install a new front output shaft oil seal

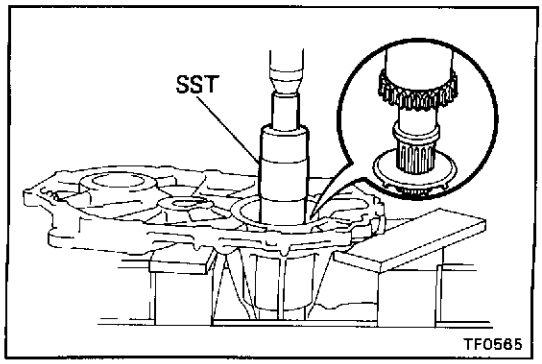

ASSEMBLY OF TRANSFER FRONT CASE

1. INSTALL FRONT OUTPUT SHAFT

Using SST and a press, press in the front output shaft to the transfer front case.

SST 09316-60010 (09316-00010)

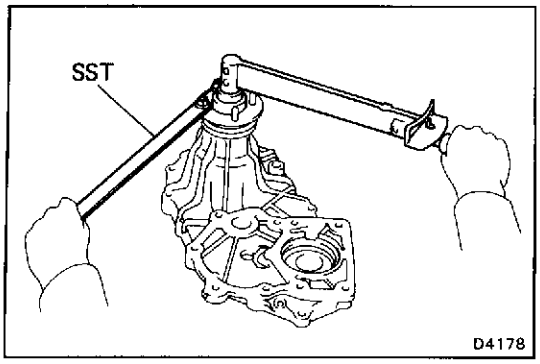

2. INSTALL FRONT COMPANION FLANGE

(a) Install the companion flange and plate washer.

(b) Using SST and two nuts to hold the companion flange, install a new companion flange lock nut.

SST 09330-00021

Torque: 1,300 kg-cm (94 ft-lb, 127 N·m)

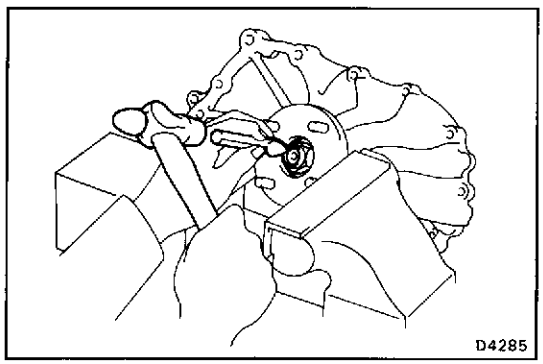

(c) Mount the companion flange in a vise.

(d) Using a hammer and chisel, stake the companion flange lock nut.

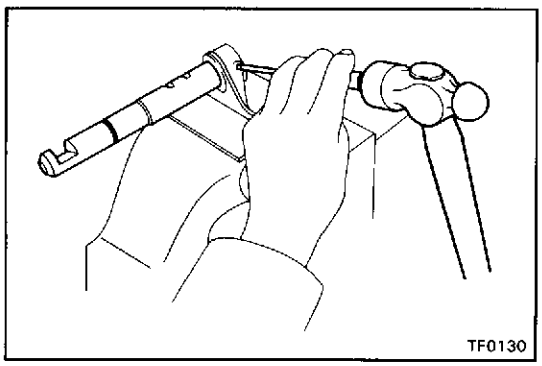

3. INSTALL FRONT DRIVE SHIFT FORK SHAFT

[Direct Shift Type]

(a) Mount the front drive shift fork in a soft jaw vise.

(b) Install the front drive shift fork shaft into shift fork.

(c) Using a pin punch and a hammer, drive in the slotted spring pin.

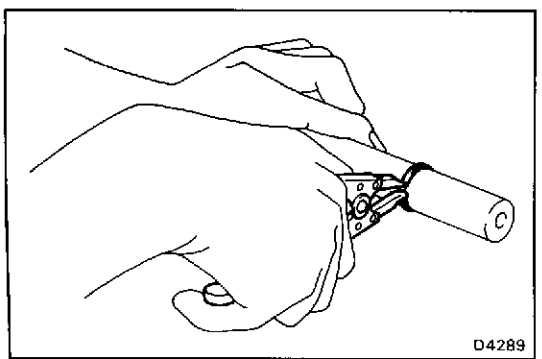

[Vacuum Shift Type]

(a) Using snap ring pliers, install the snap ring.

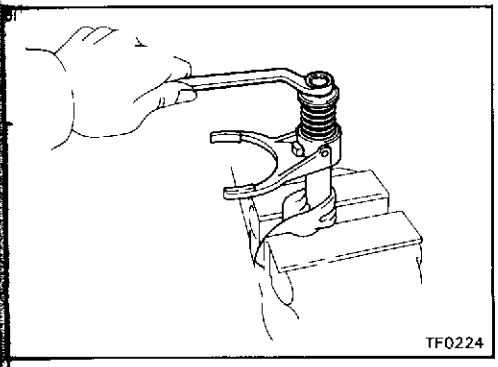

(b) Install the shift fork, spring and plate washer to the shift fork shaft with the bolt.

Torque: 185 kg-cm (13 ft-lb, 18 N·m)

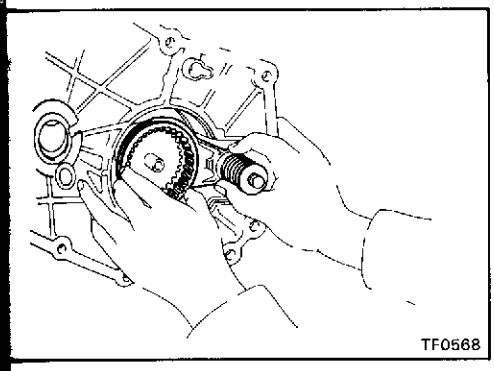

4. INSTALL FRONT DRIVE HUB SLEEVE

Install the hub sleeve with front drive shift fork shaft assembly.

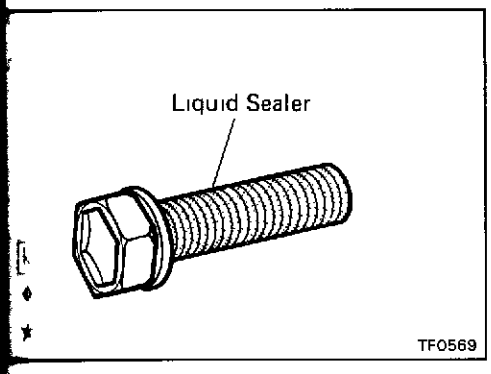

5. (VACCUM SHIFT TYPE)
INSTALL DIAPHRAGM CYLINDER ASSEMBLY

(a) Clean the threads of the bolts and case with cleaner.

(b) Apply liquid sealer to the bolts threads

Sealant: Part No.08833-00070, THREE BOND 1324 or equivalent

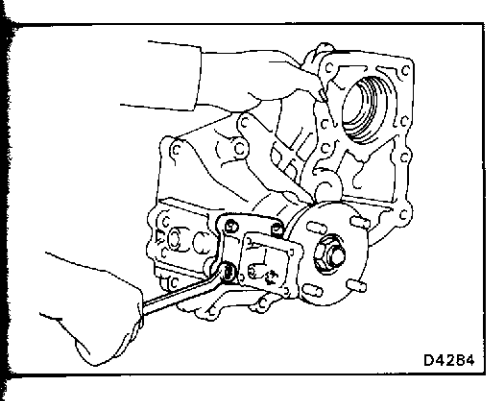

(c) Install a new gasket and the diaphragm cylinder body to the transfer front case with the four bolts.

Torque: 185 kg-cm (13 ft-lb, 18 N·m)

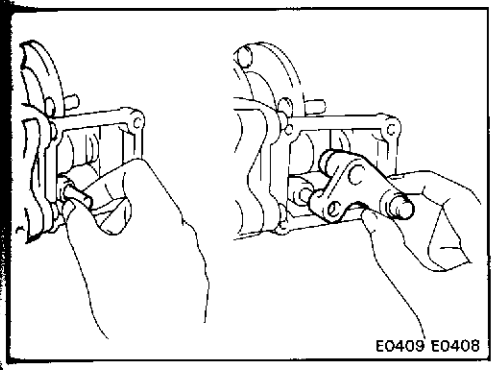

(d) Apply MP grease to the shoe and straight pin.

(e) Install the shift link lever and straight pin.

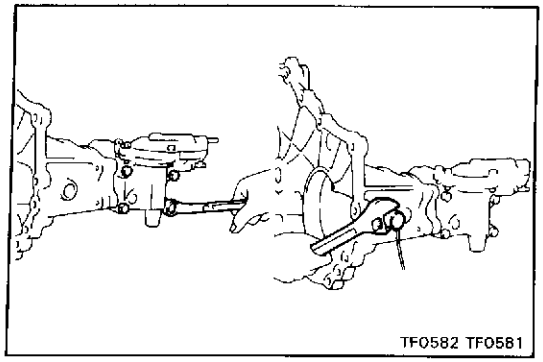

(f) Install a new gasket and the diaphragm cylinder to the diaphragm cylinder body with the four bolts.

Torque: 185 kg-cm (13 ft-lb, 18 N·m)

6. INSTALL 4WD INDICATOR SWITCH

Diaphragm Cylinder

COMPONENTS

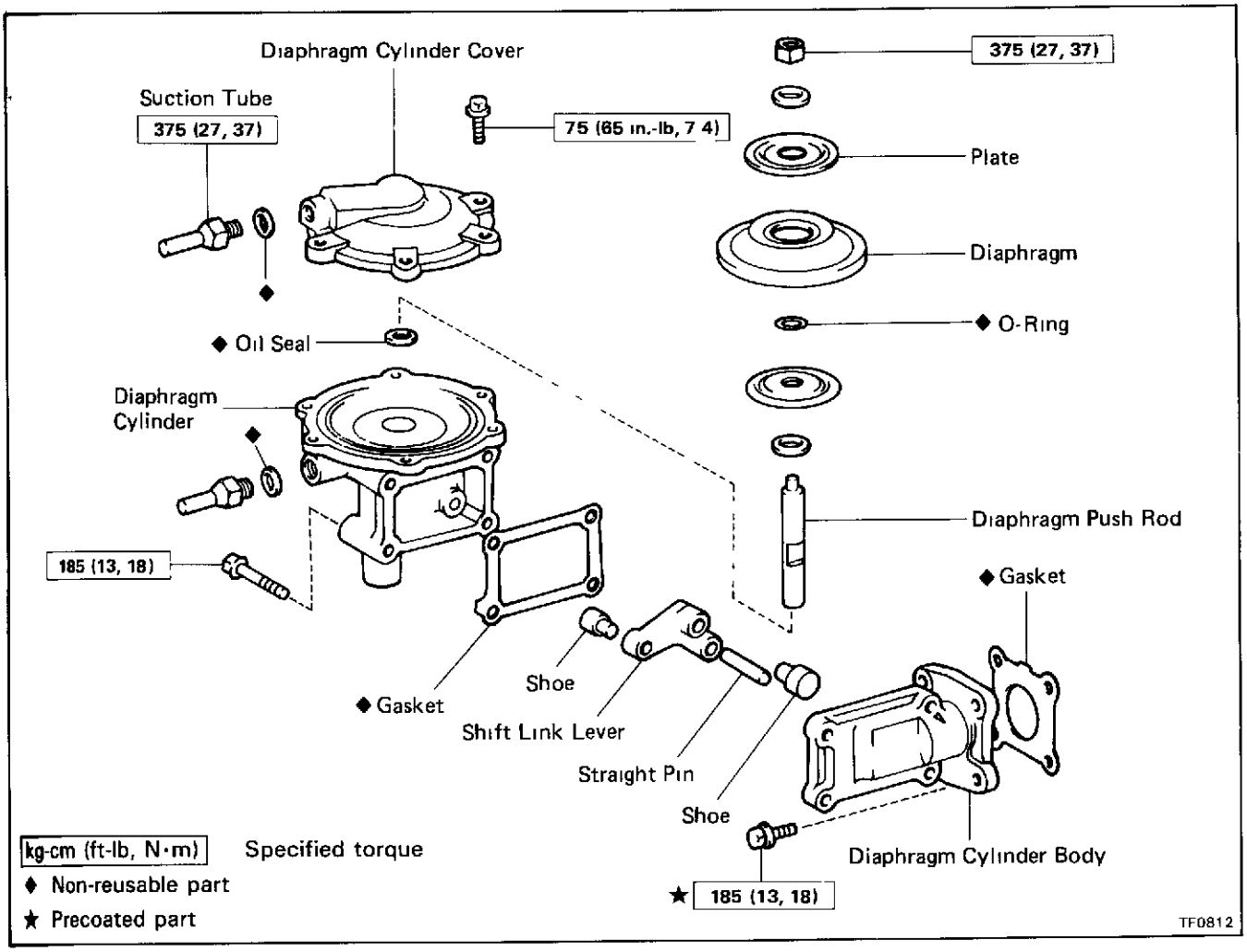

DISASSEMBLY OF DIAPHRAGM CYLINDER

1. **REMOVE DIAPHRAGM CYLINDER ASSEMBLY (See page TF-22)**

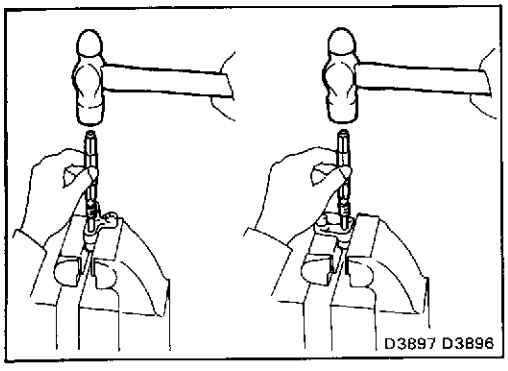

2. **REMOVE SHOE FROM SHIFT LINK LEVER**

Using a pin punch and hammer, drive out the two shoes from the shift link lever.

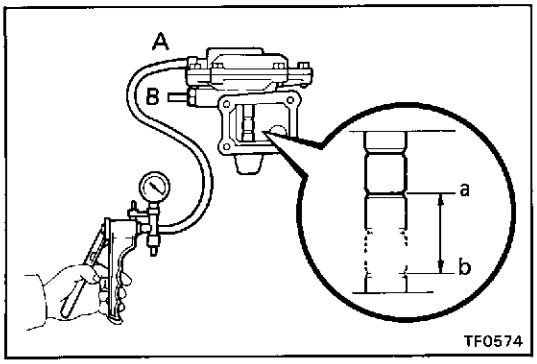

3. INSPECT DIAPHRAGM CYLINDER ASSEMBLY

(a) With at least 400 mmHg (15.75 in.Hg, 53 3 kPa) of vacuum in the port A or B, check that the shaft moves.

(b) Check the stroke between a and b.

Standard stroke: 21 mm (0.82 in.)

(c) With at least 400 mmHg (15.75 in.Hg, 53.3 kPa) of vacuum in the diaphragm, check that the gauge needle is stable.

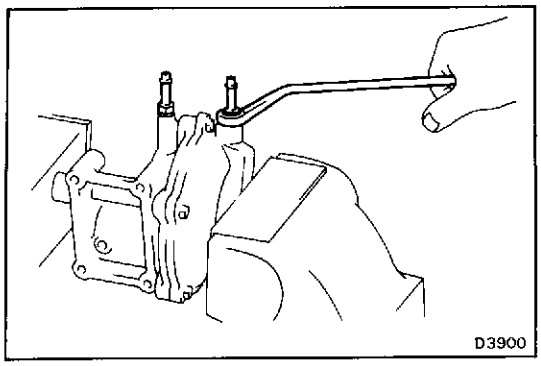

4. REMOVE SUCTION TUBES

Remove the suction tubes and gaskets from the diaphragm cylinder and cover.

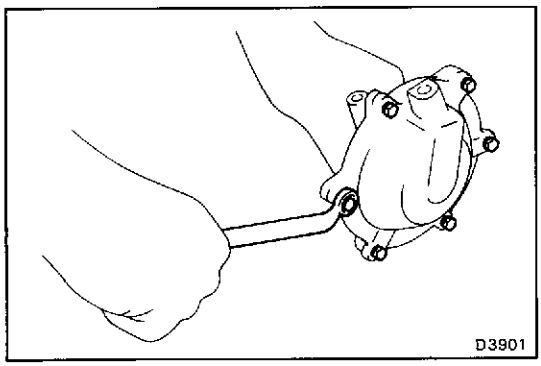

5. REMOVE DIAPHRAGM CYLINDER COVER AND PUSH ROD

Remove the six bolts, diaphragm cylinder cover and push rod.

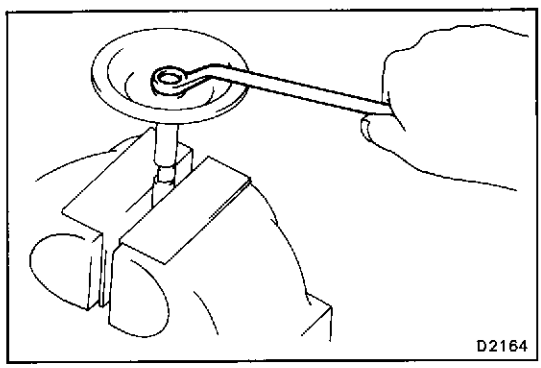

6. REMOVE FOLLOWING PARTS FROM DIAPHRAGM PUSH ROD

(a) Nut

(b) Two washers

(c) Two plates

(d) Diaphragm

(e) O-ring

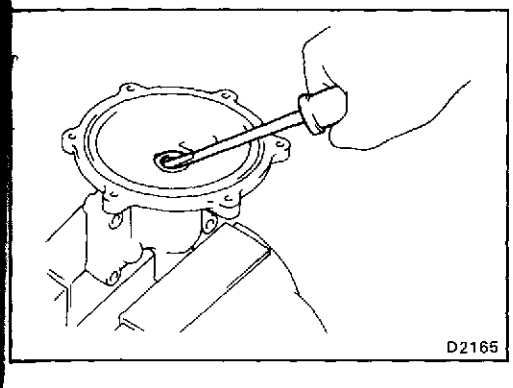

INSPECTION AND REPAIR OF DIAPHRAGM CYLINDER

IF NECESSARY, REPLACE OIL SEAL

(a) Using a screwdriver, remove the oil seal.

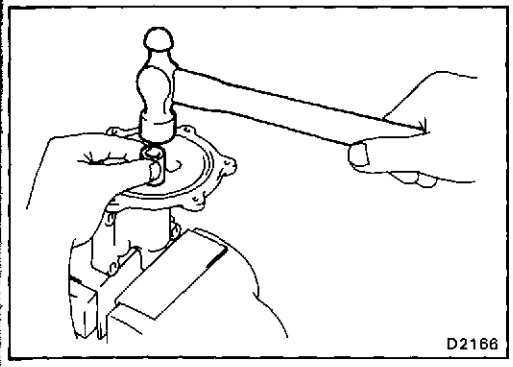

(b) Using a socket wrench, tap in a new oil seal.

(c) Apply MP grease to the oil seal lip.

ASSEMBLY OF DIAPHRAGM CYLINDER

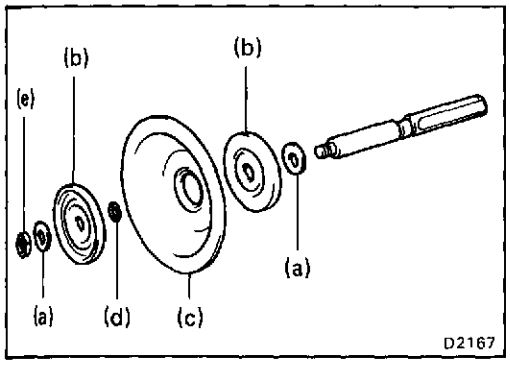

1. INSTALL FOLLOWING PARTS TO DIAPHRAGM PUSH ROD

(a) Two washers

(b) Two plates

(c) Diaphragm

(d) O-ring

(e) Nut

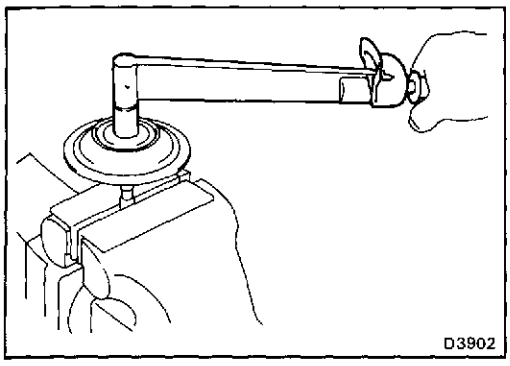

2. TORQUE DIAPHRAGM PUSH ROD NUT

Torque: 375 kg-cm (27 ft-lb, 37 N·m)

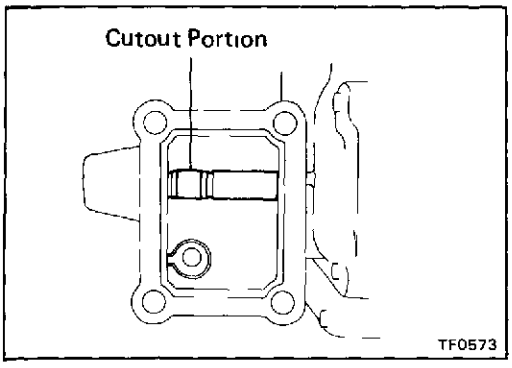

3. INSTALL DIAPHRAGM PUSH ROD INTO DIAPHRAGM CYLINDER

Install the cutout portion of the push rod into the open part of the diaphragm cylinder.

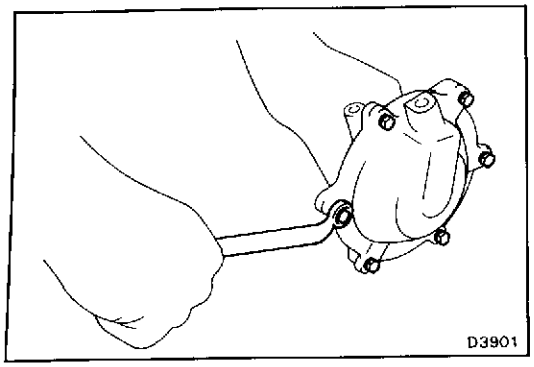

4. INSTALL DIAPHRAGM CYLINDER COVER

Install the diaphragm cylinder cover to the diaphragm cylinder with the six bolts.

Torque: 75 kg-cm (65 in.-lb, 7.4 N·m)

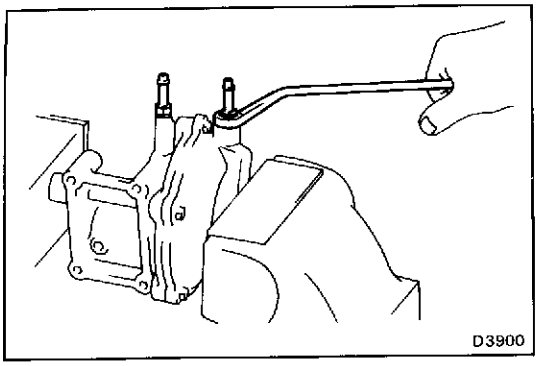

5. INSTALL SUCTION TUBES

Install the suction tubes with new gaskets.

Torque: 375 kg-cm (27 ft-lb, 37 N·m)

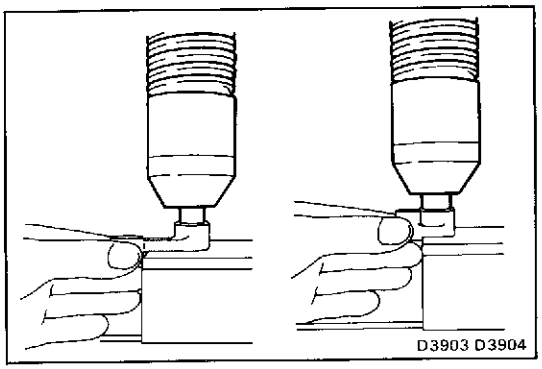

6. INSTALL SHOE TO SHIFT LINK LEVER

Using a press, press in the two shoes to the shift link lever.

7. INSTALL DIAPHRAGM CYLINDER ASSEMBLY
(See page TF-30)

Transfer Rear Case

COMPONENTS

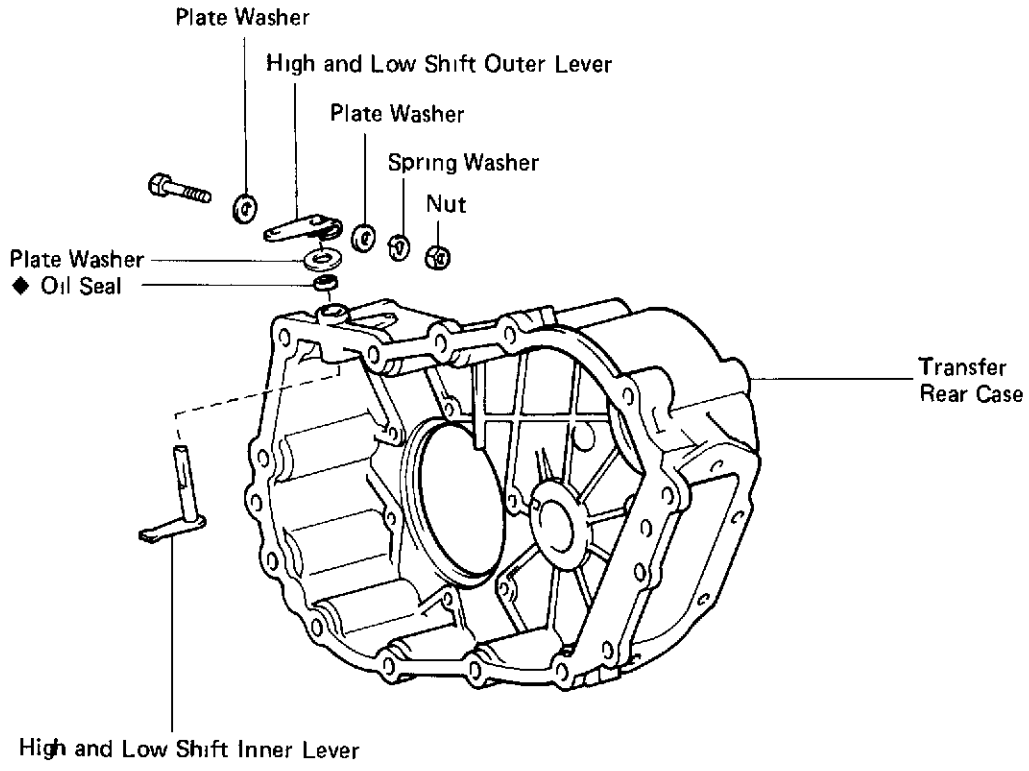

◆ Non-reusable part

TF0813

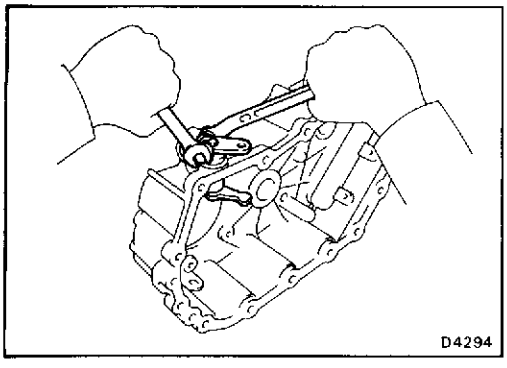

DISASSEMBLY OF TRANSFER REAR CASE

REMOVE OUTER AND INNER LEVERS OF TRANSFER HIGH AND LOW SHIFT

(a) Remove the nut, spring washer, two plate washers and bolt.

(b) Remove the shift outer lever and washer.

(c) Remove the shift inner lever

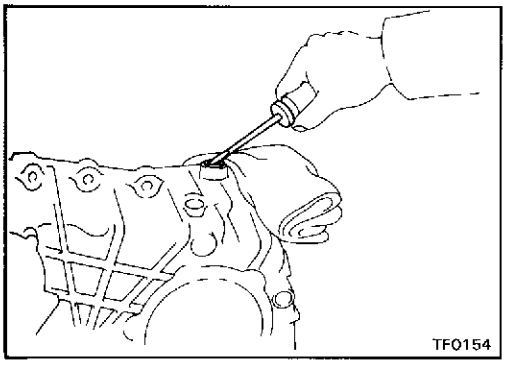

INSPECTION AND REPAIR OF TRANSFER REAR CASE

IF NECESSARY, REPLACE HIGH AND LOW SHIFT LEVER SHAFT OIL SEAL

(a) Using a screwdriver, remove the oil seal.

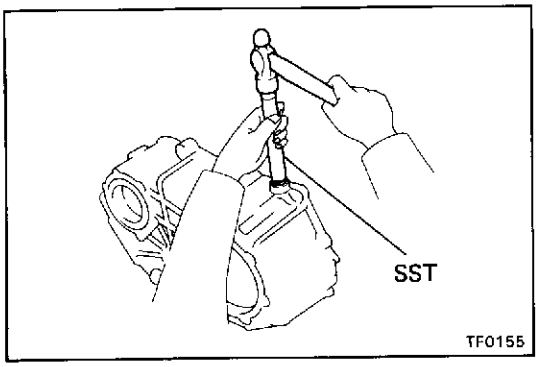

(b) Using SST and a hammer, tap in a new oil seal.

SST 09608-20012 (09608-03020)

(c) Apply MP grease to the oil seal lip.

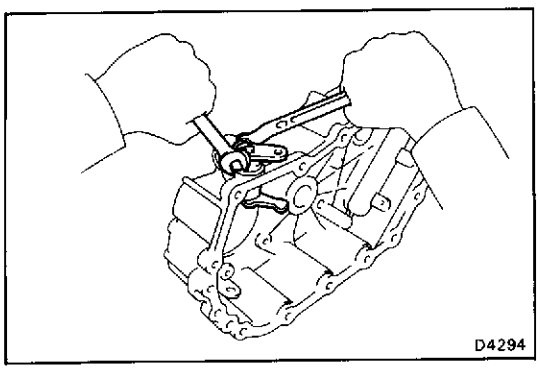

ASSEMBLY OF TRANSFER REAR CASE

INSTALL OUTER AND INNER LEVERS OF TRANSFER HIGH AND LOW SHIFT

(a) Install the shift inner lever.

(b) Install the washer and shift outer lever.

(c) Install the bolt, two plate washers, spring washer and nut.

HINT: Be carefull not to damage the oil seal lip.

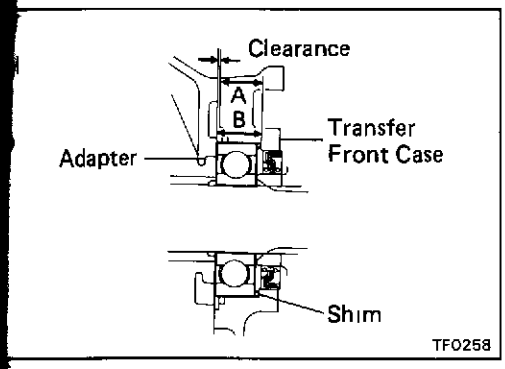

ASSEMBLY OF TRANSFER

(See page TF-4)

1. INSTALL ADJUSTING SHIM TO TRANSFER FRONT CASE

(a) Measure the difference of A and B and select a shim of a thickness for the gap between the transfer adaptor and front case to be within the standard clearance.

Standard clearance: 0.4 — 0.5 mm (0.016 — 0.020 in.)

Adjust shim thickness mm (in.)
2.28 — 2.32 (0 0898 — 0 0913)
2.38 — 2.42 (0 0937 — 0 0953)
2.48 — 2.52 (0 0976 — 0.0992)

(b) Install the adjusting shim to the transfer front case.

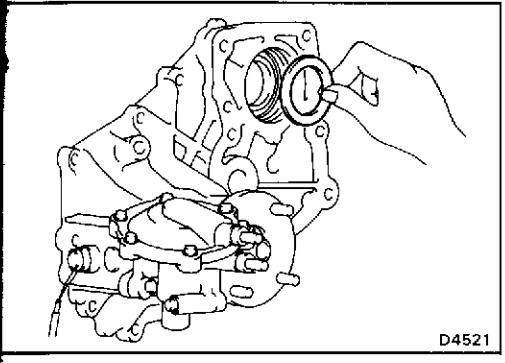

2. INSTALL TRANSFER FRONT CASE

(a) Clean the threads of the bolts and case with cleaning solvent.

(b) Apply liquid sealer to the bolt threads.

Sealant: Part No.08833-00070, THREE BOND 1324 or equivalent

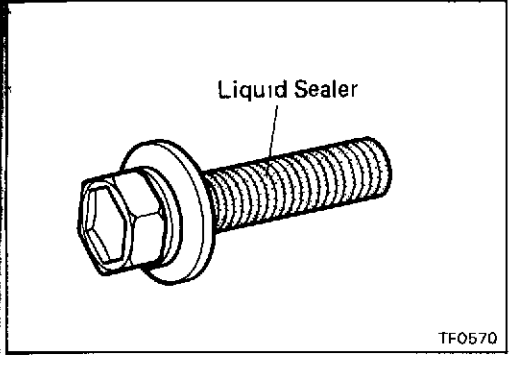

(c) Install a new gasket and transfer front case with the four bolts.

Torque: 650 kg-cm (47 ft-lb, 64 N·m)

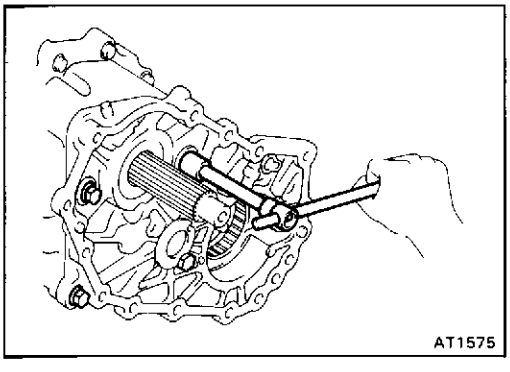

3. INSTALL REAR OUTPUT SHAFT FRONT BEARING RETAINER

Install the rear output shaft front bearing retainer.

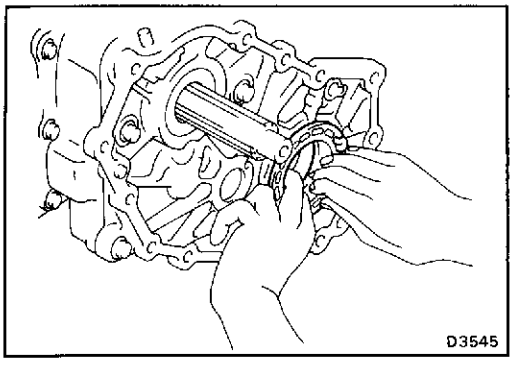

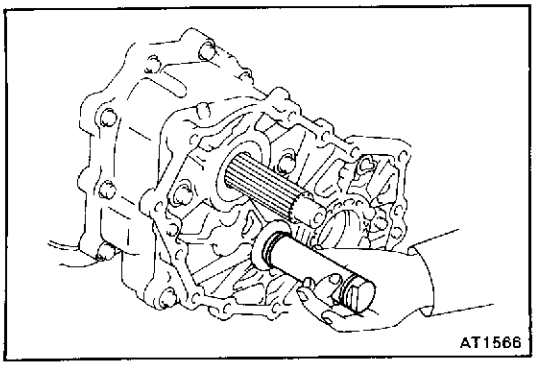

4. INSTALL IDLER GEAR SHAFT AND IDLER GEAR

(a) Apply gear oil to a new O-ring and install it to the idler gear shaft front side groove.

(b) Install the idler gear shaft to the transfer front case.

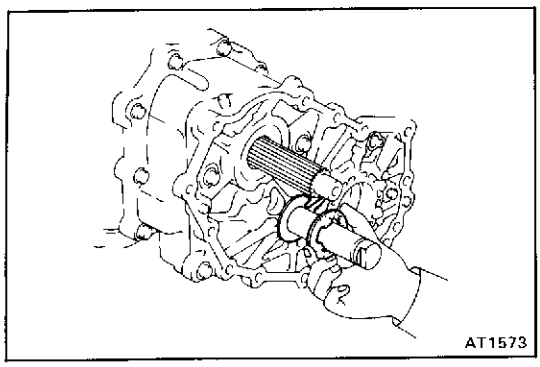

(c) Install the idler gear thrust washer.

HINT: Be sure that the protruding part of the washer fits in the case groove.

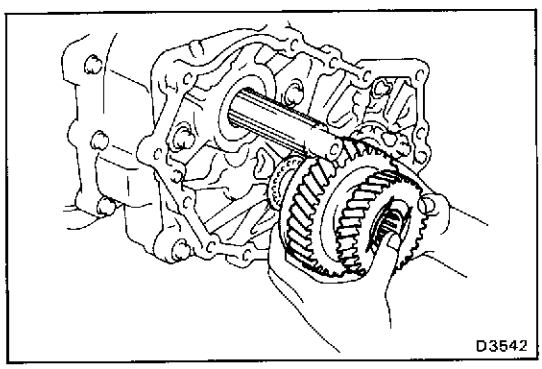

(d) Install the assembled idler gear, bearings and spacer to the idler gear shaft.

(e) Apply gear oil to a new O-ring and install it to the idler gear shaft rear side groove.

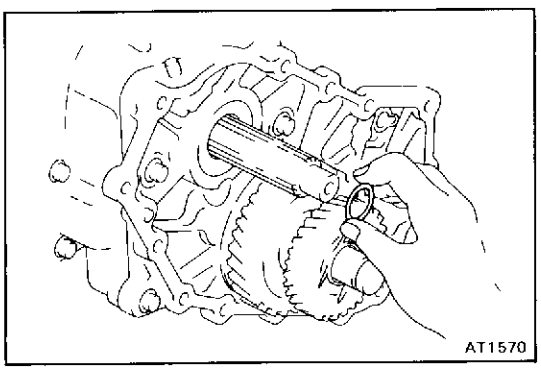

5. INSTALL O-RING TO TRANSMISSION OUTPUT SHAFT

Apply MP grease to a new O-ring and install it to the transmission output shaft.

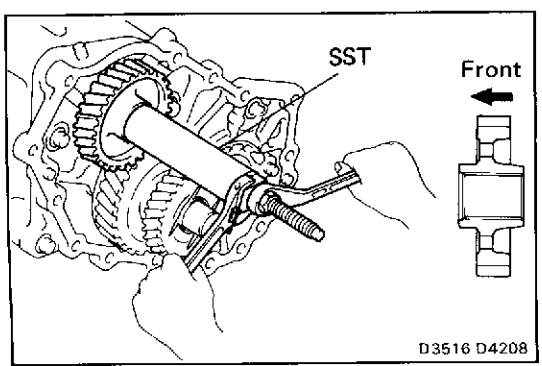

6. INSTALL TRANSFER INPUT GEAR

Using SST, install the transfer input gear.

SST 09309-36033

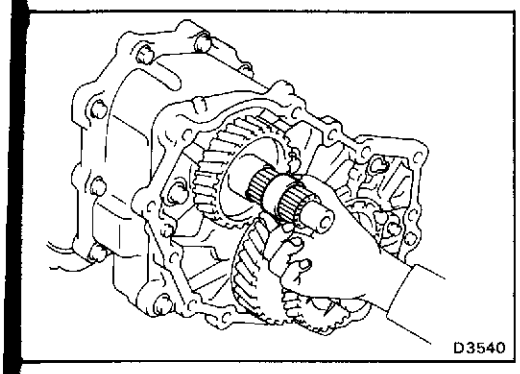

7. INSTALL POWER TAKE-OFF DRIVE GEAR

(a) Install the spacer to the transmission output shaft.

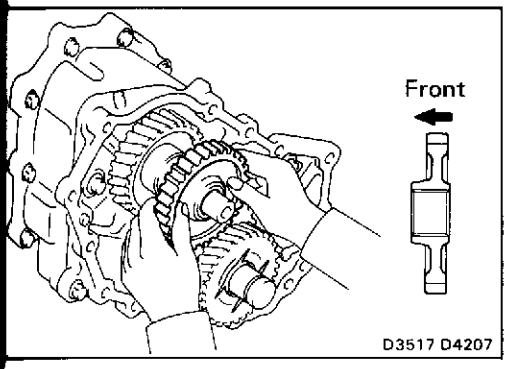

(b) Install the power take-off drive gear to the transmission output shaft.

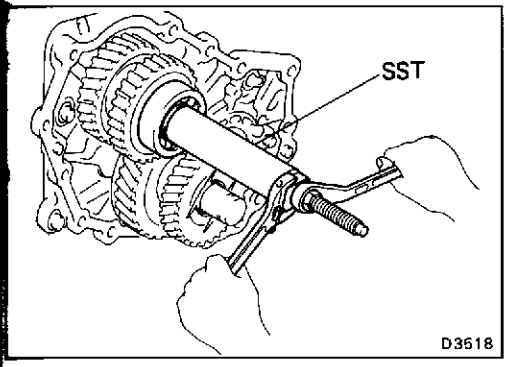

(c) Using SST, install the transfer input gear bearing.

SST 09309-36033

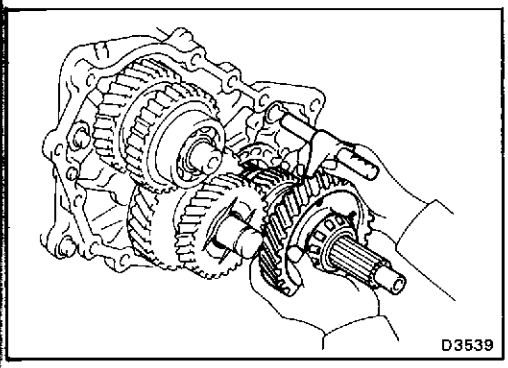

8. INSTALL REAR OUTPUT SHAFT ASSEMBLY WITH HIGH AND LOW SHIFT FORK SHAFT ASSEMBLY

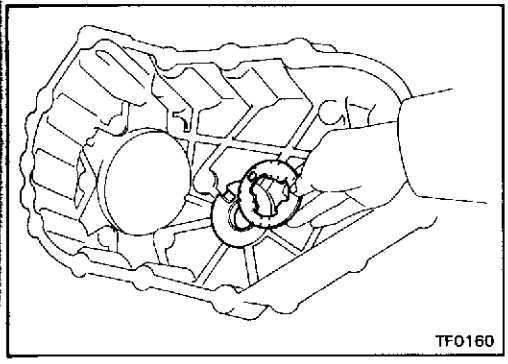

9. INSTALL TRANSFER REAR CASE

(a) Using MP grease, stick the thrust washer to the transfer rear case.

HINT: Be sure that the protruding part of the washer fits in the case groove.

(b) Place a new gasket on the front case.

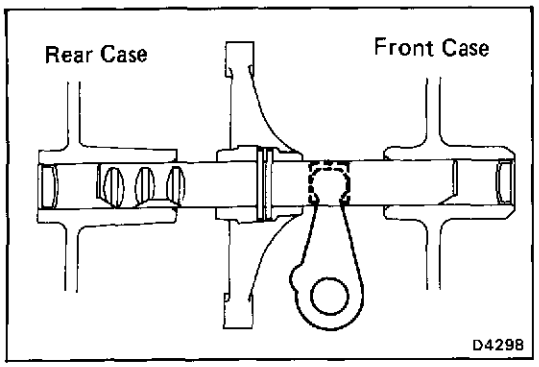

(c) While aligning the cutout of the shift fork shaft and shift inner lever, install the transfer rear case.

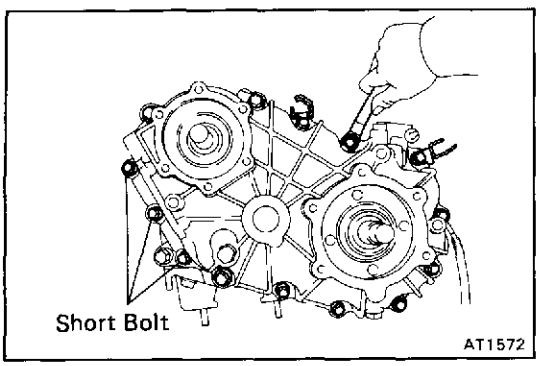

(d) Install and torque the fourteen bolts.

Torque:
17 mm head bolt 650 kg-cm (47 ft-lb, 64 N·m)
14 mm head bolt 400 kg-cm (29 ft-lb, 39 N·m)

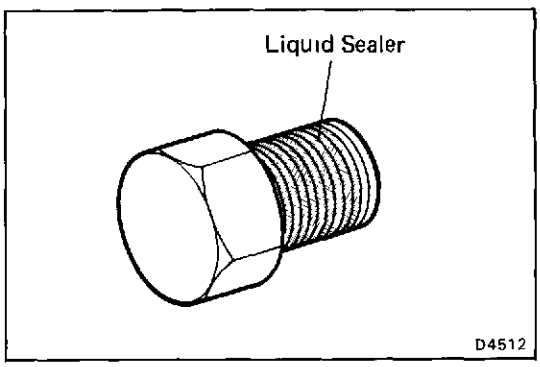

10. INSTALL LOCKING BALLS, SPRINGS AND SHIFT PLUGS

(a) Clean the threads of the plug and case with cleaning solvent.

(b) Apply liquid sealer to the plug threads.

Sealant: Part No.08833-00070, THREE BOND 1324 or equivalent

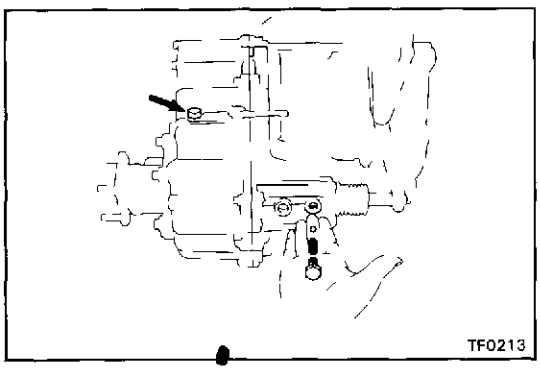

[Direct Shift Type]

Install the locking balls and springs, and torque the plugs.

Torque: 450 kg-cm (33 ft-lb, 44 N·m)

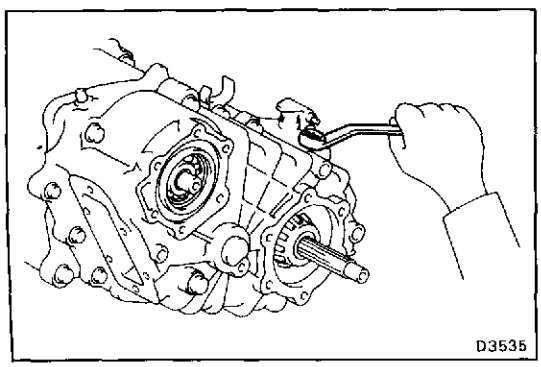

[Vacuum Shift Type]

Install the locking ball and spring, and torque the plug.

Torque: 450 kg-cm (33 ft-lb, 44 N·m)

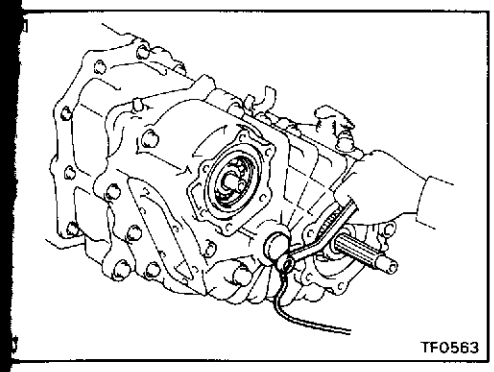
TF0563

11. INSTALL IDLER GEAR SHAFT LOCK PLATE

Install the lock plate and bolt. Torque the bolt.

Torque: 210 kg-cm (15 ft-lb, 21 N·m)

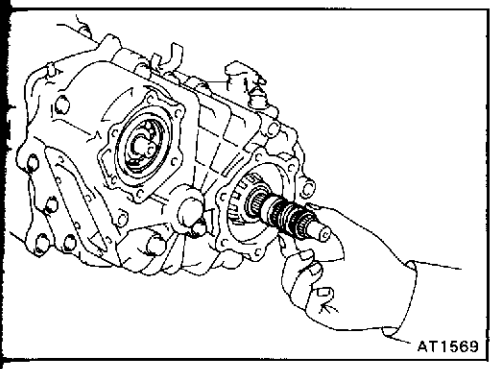
AT1569

12. INSTALL SPACER, SPEEDOMETER DRIVE GEAR AND WASHER

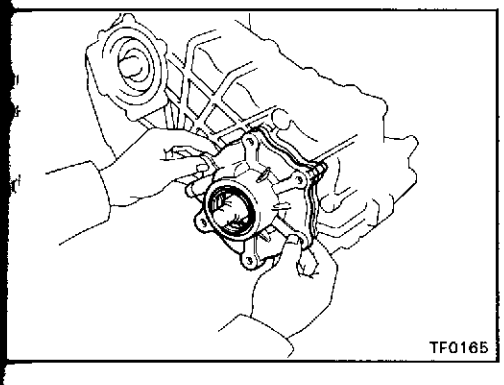
TF0165

13. ADJUST REAR OUTPUT SHAFT BEARINGS PRELOAD

(a) Align the rib with the transfer rear case.

(b) Install the rear bearing retainer.

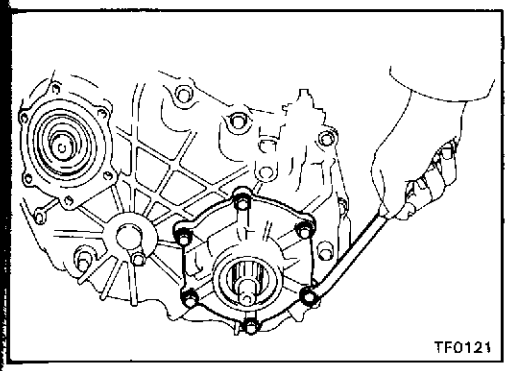
TF0121

(c) Install and torque the six bolts.

Torque: 350 kg-cm (25 ft-lb, 34 N·m)

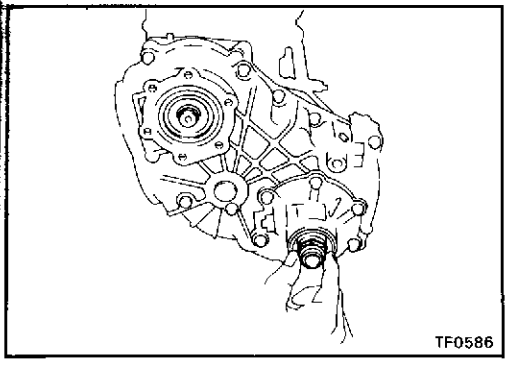
TF0586

(d) Temporarily install a new rear companion flange lock nut.

(e) Shift the outer lever of the transfer high and low shift lever to N position.

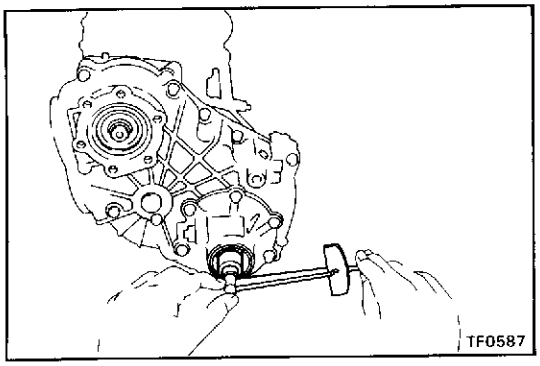

(f) Using a torque meter, measure the preload of the rear output shaft bearings.

Torque: (at starting)

New bearing	**15 — 24.7 kg-cm (13.0 — 21.4 in.-lb, 1.5 — 2.4 N·m)**
Reused bearing	**7 — 12 kg-cm (6.1 — 10.4 in.-lb, 0.7 — 1.2 N·m)**

If the preload is not within specification, remove the outer race of the rear output shaft rear bearing with SST.

SST 09514-35011

Reselect an adjusting shim.

Mark	Thickness mm(in.)	Mark	Thickness mm(in.)
0	0.15 (0.0059)	10	1.00 (0 0394)
4	0 40 (0.0157)	11	1.10 (0 0433)
5	0 50 (0.0197)	12	1.20 (0.0472)
6	0.60 (0 0236)	13	1.30 (0 0512)
7	0 70 (0 0276)	14	1 40 (0 0551)
8	0 80 (0.0315)	15	1 50 (0.0591)
9	0.90 (0 0354)		

HINT:

- If the preload is more than specification decrease the thickness of the shim, if less than specification, increase the thickness of shim.
- The preload will change about 10.0 kg-cm (8.7 in.-lb, 1.0 N·m) with each shim thickness.

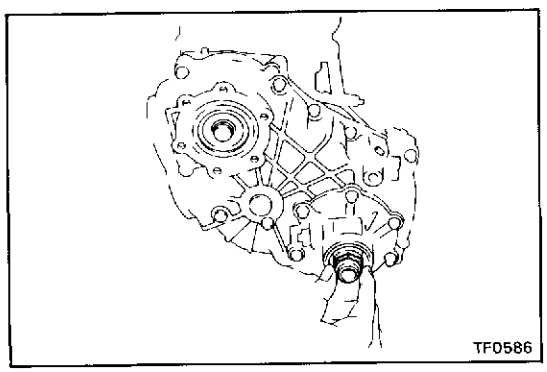

(g) Remove the rear companion flange lock nut.

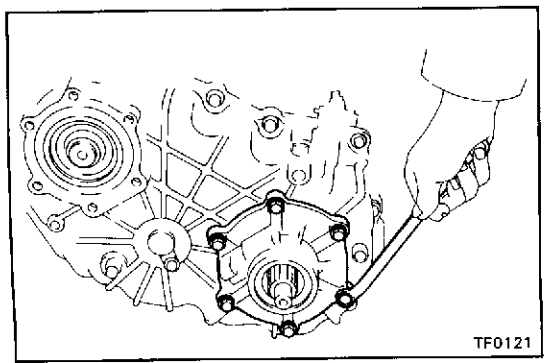

14. REMOVE REAR BEARING RETAINER

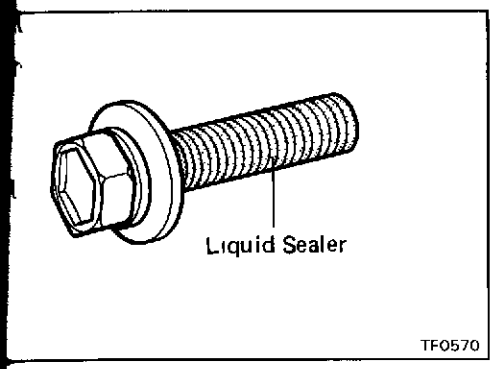

15. INSTALL REAR BEARING RETAINER

(a) Clean the threads of the bolts and case with cleaner.

(b) Apply liquid sealer to the bolts threads.

Sealant: Part No.08833-00070, THREE BOND 1324 or equivalent

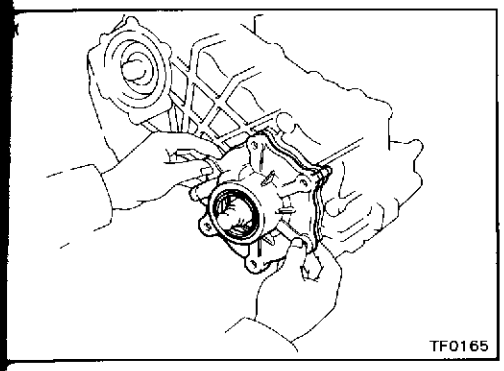

(c) Place a new gasket on the rear case.

(d) Align the rib with the transfer rear case.

(e) Install the rear bearing retainer.

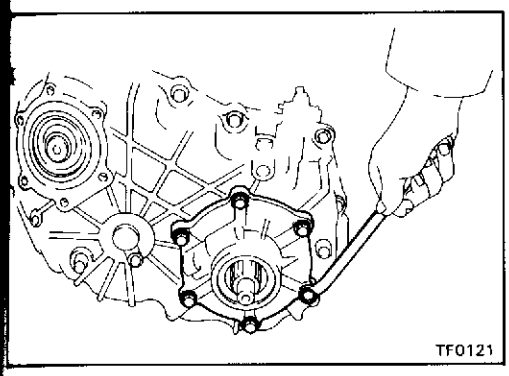

(f) Install and torque the six bolts.

Torque: 350 kg-cm (25 ft-lb, 34 N·m)

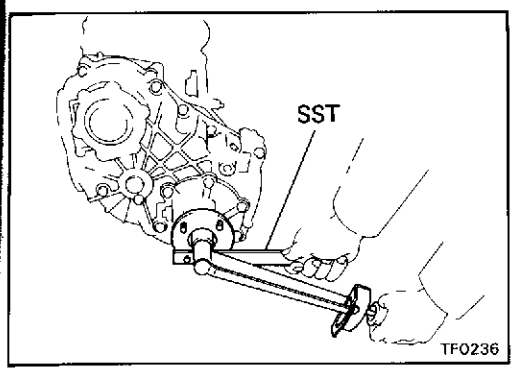

16. INSTALL REAR COMPANION FLANGE

(a) Install the companion flange and plate washer.

(b) Using SST and two nuts to hold the companion flange, install a new companion flange lock nut.

SST 09330-00021

Torque: 1,300 kg-cm (94 ft-lb, 127 N·m)

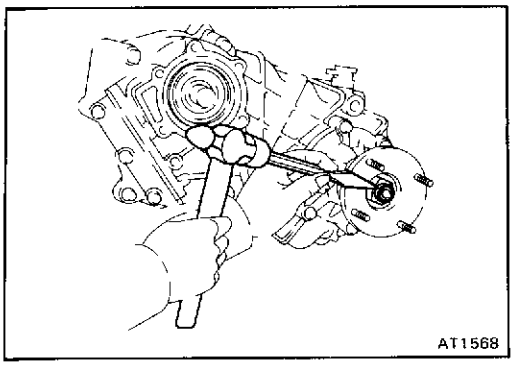

(c) Using a hammer and chisel, stake the companion flange lock nut.

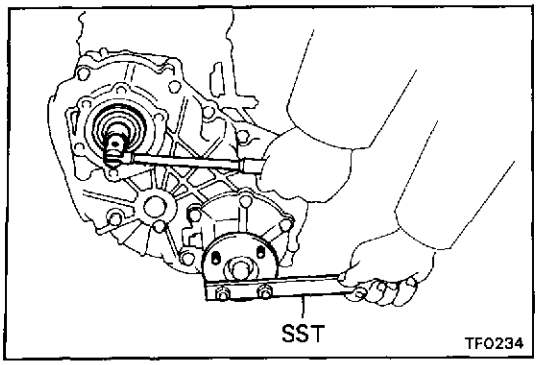

17. INSTALL TRANSMISSION OUTPUT SHAFT LOCK NUT

(a) Shift the outer lever of the transfer high and low shift lever to H2 or L4 position.

(b) Install the plate washer.

(c) Using SST and two nuts to hold the companion flange, install a new transmission output shaft lock nut.

SST 09330-00021

Torque: 1,300 kg-cm (94 ft-lb, 127 N·m)

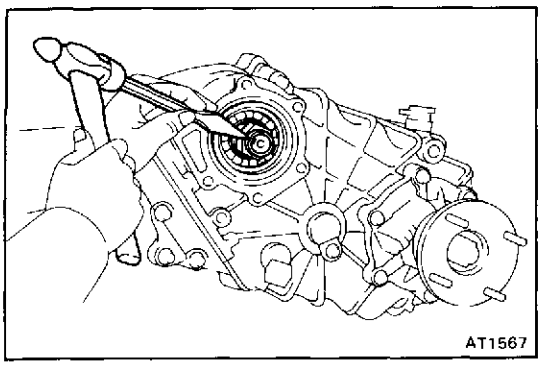

(d) Using a hammer and chisel, stake the transmission output shaft lock nut.

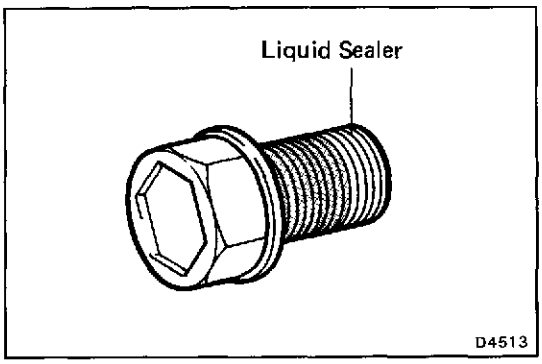

18. INSTALL TRANSFER NO.2 CASE COVER

(a) Clean the threads of the bolts and case with cleaning solvent.

(b) Apply liquid sealer to the bolt threads.

Sealant: Part No.08833-00070, THREE BOND 1324 or equivalent

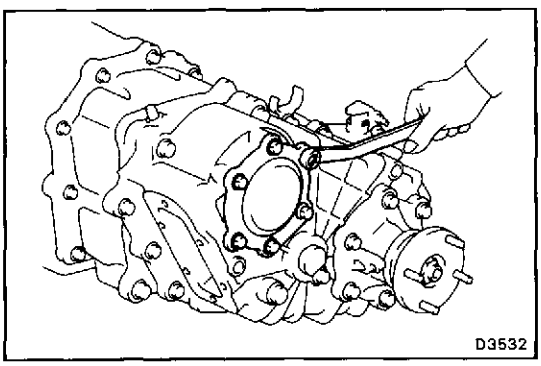

(c) Install a new gasket and the transfer No.2 case cover with the six bolts.

(d) Torque the bolts.

Torque: 155 kg-cm (11 ft-lb, 15 N·m)

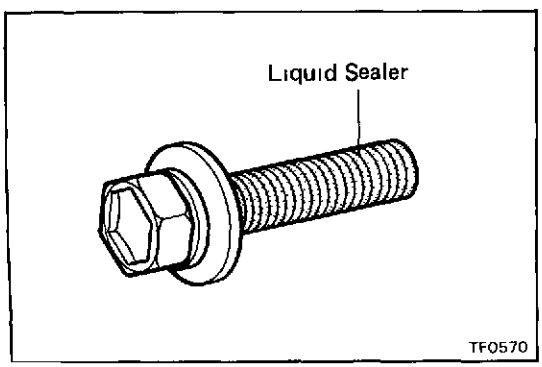

19. INSTALL POWER TAKE-OFF COVER

(a) Clean the threads of the two bolts and case with cleaning solvent.

(b) Apply liquid sealer to the two bolts threads.

Sealant: Part No.08833-00070, THREE BOND 1324 or equivalent

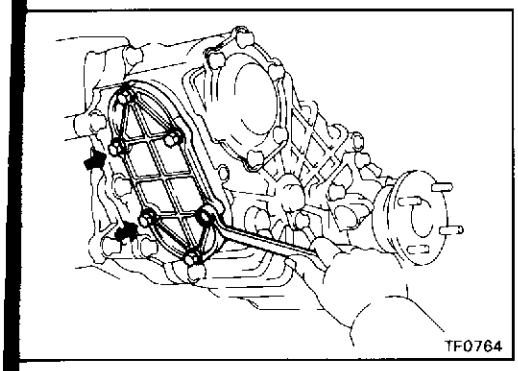
TF0764

(c) Install a new gasket and the power take-off cover with the two sealer coated bolts indicated by arrows and four bolts as shown.

Torque:

Sealer coated bolts	**170 kg-cm (12 ft-lb, 17 N·m)**
Other bolts	**195 kg-cm (14 ft-lb, 19 N·m)**

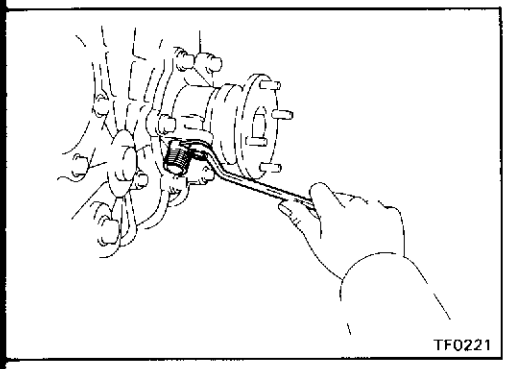
TF0221

20. INSTALL SPEEDOMETER DRIVEN GEAR

(a) Apply gear oil to a new O-ring

(b) Install the O-ring to the speedometer driven gear.

(c) Install the speedometer driven gear with lock plate and bolt.

Torque: 130 kg-cm (9 ft-lb, 13 N·m)

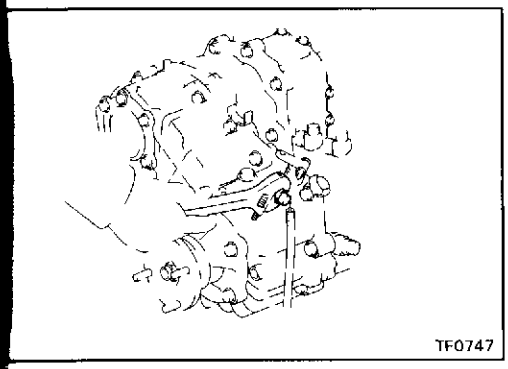
TF0747

21. INSTALL TRANSFER L4 POSITION SWITCH

(a) Install the transfer L4 position switch.

Torque: 250 kg-cm (18 ft-lb, 25 N·m)

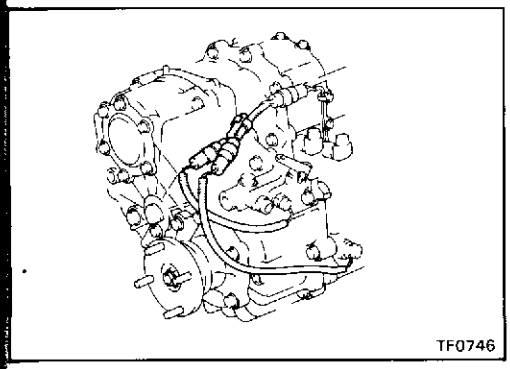
TF0746

(b) Connect the two connectors.

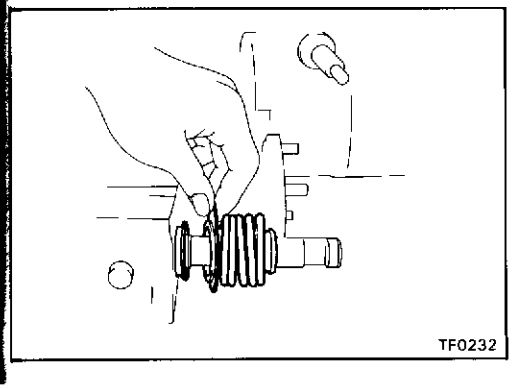
TF0232

22. (Direct Shift Type)
INSTALL DUST BOOT

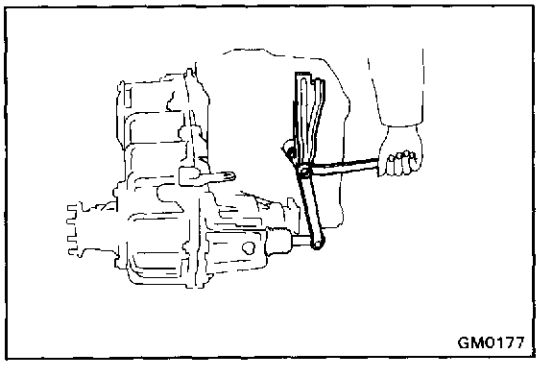

23. **(Direct Shift Type)**
INSTALL TRANSFER FRONT DRIVE SHIFT LEVER

SUSPENSION AND AXLE

	Page
TROUBLESHOOTING	SA-2
WHEEL ALIGNMENT	SA-3
FREE WHEELING HUB	SA-6
POWER LOCKING HUB	
Parts Location	SA-15
Wiring Diagram	SA-16
Connectors	SA-17
Troubleshooting	SA-18
Parts Inspection	SA-20
Power Locking Hub Actuator	SA-23
FRONT AXLE HUB	SA-29
STEERING KNUCKLE AND AXLE SHAFT	SA-38
FRONT DIFFERENTIAL	
On-Vehicle Replacement of Rear Oil Seal	SA-52
Removal and Installation of Front Differential	SA-56
Differential Carrier	SA-62
Differential Case (2 Pinion Type)	SA-84
Differential Case (4 Pinion Type)	SA-86
LEAF SPRING TYPE FRONT SUSPENSION	
Leaf Spring and Shock Absorber	SA-89
Stabilizer Bar	SA-95
COIL SPRING TYPE FRONT SUSPENSION	
Coil Spring and Shock Absorber	SA-98
Lateral Control Rod	SA-102
Leading Arm	SA-104
Stabilizer Bar	SA-107
REAR AXLE SHAFT (Semi-Floating Type)	SA-110
REAR AXLE SHAFT AND AXLE HUB (Full-Floating Type)	SA-118
REAR DIFFERENTIAL / 8 INCH TYPE	
On-Vehicle Replacement of Front Oil Seal	SA-127
Removal and Installation of Rear Differential	SA-129
Differential Carrier	SA-132
Differential Case (4 Pinion Type)	SA-133
Differential Case (Limited Slip Differential)	SA-134
REAR DIFFERENTIAL / 9.5 INCH TYPE	
On-Vehicle Replacement of Front Oil Seal	SA-140
Removal and Installation of Rear Differential	SA-144
Differential Carrier	SA-148
Differential Case (2 Pinion Type)	SA-171
Differential Case (4 Pinion Type)	SA-173
Differential Case (Limited Slip Differential)	SA-176
DIFFERENTIAL LOCKING SYSTEM	
Description	SA-180
Parts Location and System Diagram	SA-180
Wiring and Connector Diagrams	SA-181
Troubleshooting	SA-183
System Inspection	SA-183
Differential Locking System Circuit	SA-185
Differential Lock Actuator	SA-186
Differential Lock Control Switch	SA-193
Indicator Switch	SA-193
Combination Meter	SA-193
LEAF SPRING TYPE REAR SUSPENSION	SA-194
COIL SPRING TYPE REAR SUSPENSION	
Coil Spring and Shock Absorber	SA-200
Trailing Arm	SA-205
Lateral Control Rod	SA-208

SA

TROUBLESHOOTING

Problem	Possible cause	Remedy	Page	
			Front	Rear
Wanders/pulls	Tire worn or improperly inflated	Replace tire or inflate tires to proper pressure	A-15	A-15
	Alignment incorrect	Check front wheel alignment	SA-3	–
	Front or rear suspension parts loosen or broken	Tighten or replace suspension parts	SA-89, 98	SA-194, 200
	Steering linkage loosen or worn	Tighten or replace steering linkage	SR-72, 76	–
	Steering gear out of adjustment or broken	Adjust or repair steering gear	SR-20, 62	–
Bottoming	Vehicle overloaded	Check loading		
	Shock absorber worn out	Replace shock absorber	SA-89, 98	SA-194, 200
	Spring weak	Replace spring	SA-89, 98	SA-194, 200
Way/pitches	Tires improperly inflated	Inflated tires to proper pressure	A-15	A-15
	Stabilizer bar bent or broken	Inspect stabilizer bar	SA-89, 98	SA-194, 200
	Shock absorber worn out	Replace shock absorber	SA-89, 95	SA-194, 200
Front wheel shimmy	Tires worn or improperly inflated	Replace tire or inflate tires to proper pressure	A-15	–
	Wheels out of balance	Balance wheels		
	Shock absorber worn out	Replace shock absorber	SA-89, 98	–
	Wheel alignment incorrect	Check front wheel alignment	SA-3	–
	Hub bearings worn	Replace hub bearings	SA-29	–
	Steering gear out of adjustment or broken	Adjust or repair steering gear	SR-20, 62	–
Abnormal tire wear	Tires improperly inflated	Inflated tire to proper pressure	A-15	A-15
	Shock absorbers worn out	Replace shock absorber	SA-89, 98	SA-194, 200
	Wheel alignment incorrect	Check wheel alignment	SA-3	–
	Suspension parts worn	Replace suspension parts	SA-89, 98	SA-194, 200
Oil leak from axle	Oil seals worn or damaged	Replace oil seal	SA-38	–
	Bearing retainer loose	Replace retainer	–	SA-110, 118
	Axle housing cracked	Repair as necessary	–	SA-110, 118
Oil leak from pinion shaft	Oil level too high or wrong grade	Drain and replace oil	SA-52	SA-127, 140
	Oil seal worn or damaged	Replace oil seal	SA-52	SA-127, 140
	Companion flange loose or damaged	Tighten or replace bearings	SA-52	SA-127, 140
Noises in axle	Oil level low or wrong grade	Drain and replace oil	SA-52	SA-127, 140
	Excessive backlash between pinion and ring or side gear	Check backlash	SA-62	SA-132, 148
	Ring, pinion or side gears worn or chipped	Inspect gears	SA-62	SA-132, 148
	Pinion shaft bearing worn	Replace bearing	SA-34	SA-132, 148
	Axle shaft bearing worn	Replace bearing	SA-29	SA-110, 118
	Differential bearing loose or worn	Tighten or replace bearings	SA-52	SA-127, 140

WHEEL ALIGNMENT

1. MAKE FOLLOWING CHECKS AND CORRECT ANY PROBLEMS

(a) Check the tires for wear, size and proper inflation pressure.

Cold tire inflation pressure: See page A-15

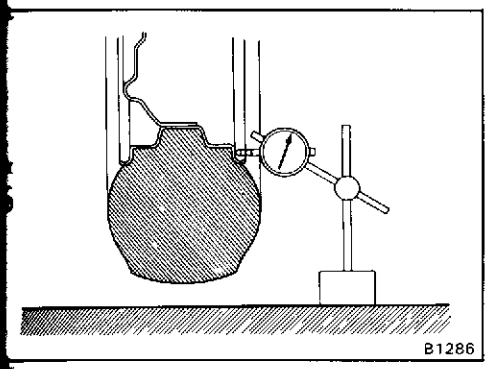

(b) Check the wheel runout.

Lateral runout: 1.2 mm (0.047 in.)

(c) Check the front wheel bearings for looseness.

(d) Check the front suspension for looseness.

(e) Check the steering linkage for looseness.

(f) Use the standard bounce test to check that the front absorbers work properly.

2. MEASURE CHASSIS GROUND CLEARANCE

Chassis ground clearance: See page A-16

If the clearance of the vehicle is not standard, try to level the vehicle by rocking it down.

If still not correct, check for bad springs or suspension parts.

HINT. When measuring the chassis ground clearance, measure from the ground to the center of the lower suspension arm front mounting bolt

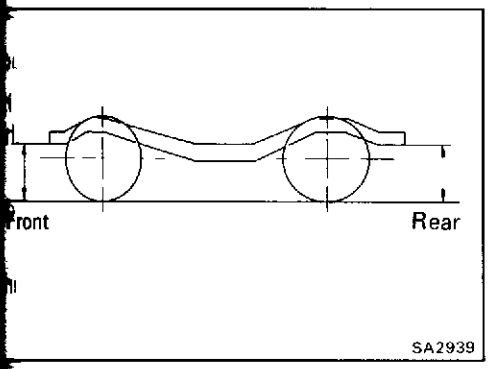

3. INSTALL WHEEL ALIGNMENT EQUIPMENT

Follow the specific instructions of the equipment manufacture.

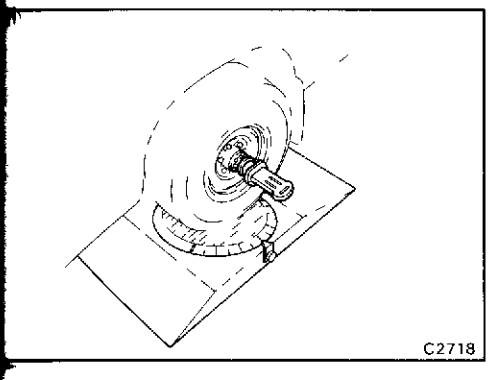

4. CHECK CAMBER AND STEERING AXIS INCLINATION

Camber: 1° ± 45'

Steering axis inclination: 12°00' ± 45'

If the steering axis inclination is not as specified after camber have been correctly adjusted, recheck the steering knuckle and front wheel for bending or looseness.

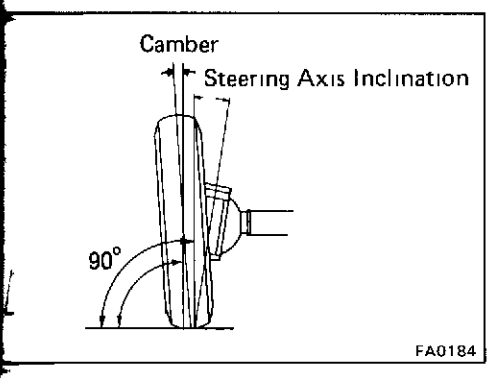

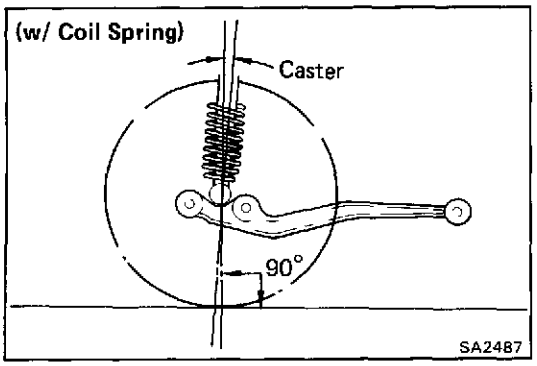

5. **(w/ COIL SPRING)**
CHECK CASTER

Caster: 4°05′ ± 1°

If caster is not as specified, inspect and replace damaged or worn suspension parts.

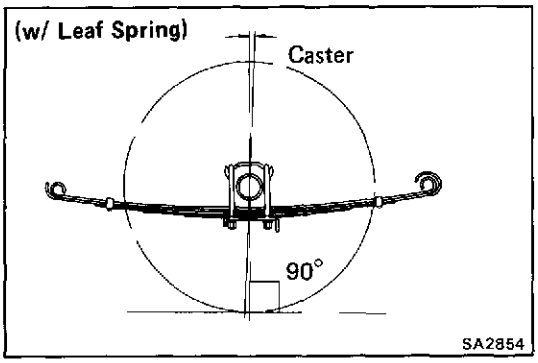

6. **(w/ LEAF SPRING)**
CHECK CASTER

Short Middle series	**1°15′ ± 1°**
Long (Van) series	**0°50′ ± 1°**
Long (Pickup) series	**0°30′ ± 1°**

If caster is not as specified, inspect and replace damaged or worn parts.

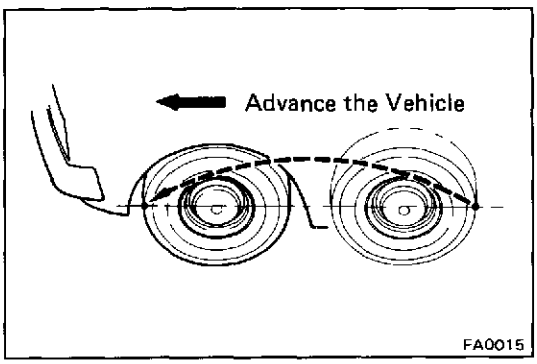

7. **ADJUST TOE-IN**

(a) Make sure the wheels are positioned straight ahead.

(b) Mark the center of each rear tread at spindle height and measure the distance between the marks of the right and left tires.

(c) Advance the vehicle until the marks on the rear side of the tires come to the front.

HINT: The toe-in should be measured at the same point on the tire at the same level.

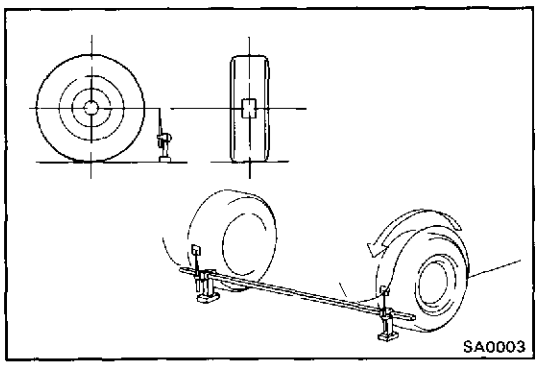

(d) Measure the distance between the marks on the front side of the tires.

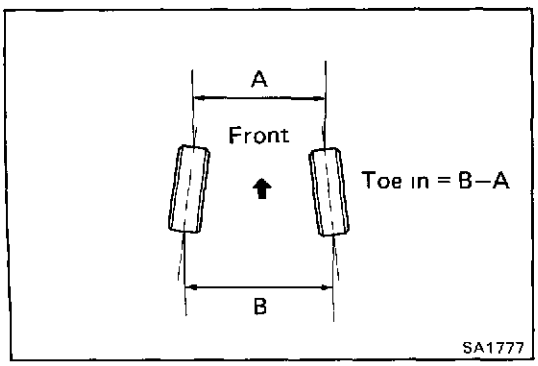

(e) Measure the toe-in.

Toe-in = B — A

Inspection STD: See page A-16

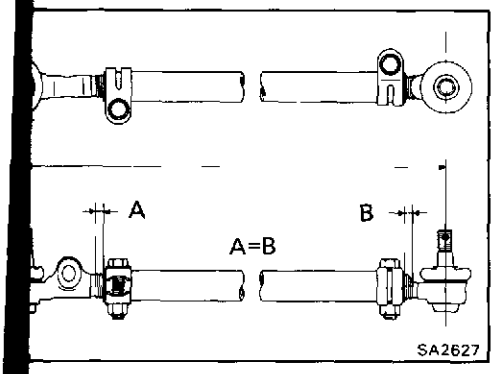

(f) Loosen the nuts holding the clamps to the tie rod.

(g) Adjust toe-in to the correct value by turning the tie rod.

(h) Insure that the lengths of the tie rod ends are the same.

(i) Torque the nuts holding the clamps.

Torque: 375 kg-cm (27 ft-lb, 37 N·m)

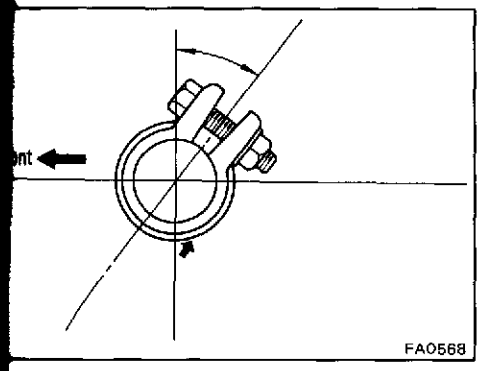

HINT: The clamps opening must be positioned at the rear of the tie rod and face within 45° from the verticle axis.

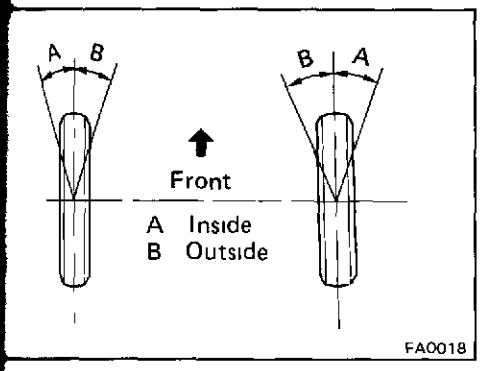

8. ADJUST WHEEL ANGLE

Remove the caps of the knuckle stopper bolts and check the steering angles.

Wheel angle: See page A-16

Wheel angle		
Max.	Inside wheel	32° $^{+0°}_{-3°}$
	Outside wheel	30° (Leaf Spring Type)
		28° (Coil Spring Type)

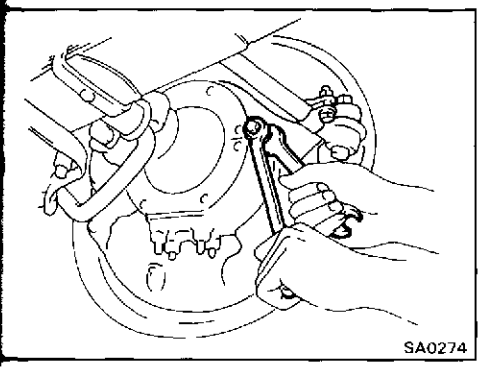

HINT: When the steering wheel is fully turned, make sure that the wheel is not touching the body or brake flexible hose.

If maximum steering angles differ from the standard value, adjust the wheel angle with the knuckle stopper bolts.

Torque: 450 kg-cm (33 ft-lb, 44 N·m)

If the wheel angle still cannot be adjusted within limits, inspect and replace damaged or worn steering parts

9. INSPECT SIDE SLIP (REFERENCE ONLY)

Side slip or less : 3.0 mm/m (0.018 in/3.3ft)

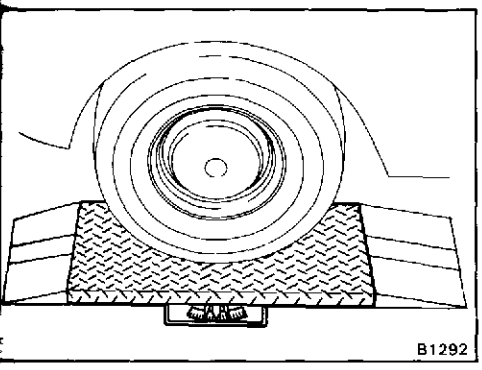

FREE WHEELING HUB

COMPONENTS

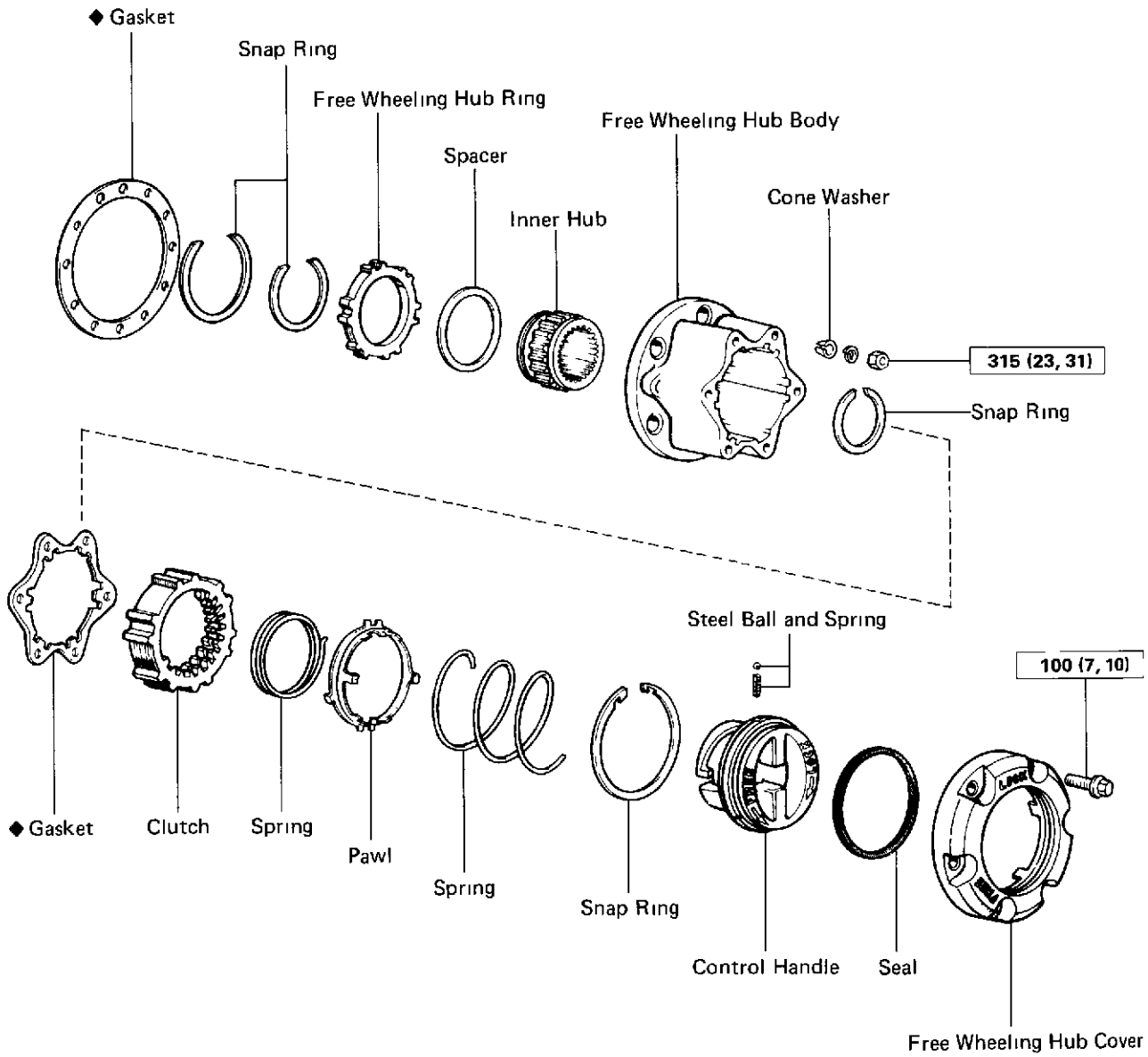

kg-cm (ft-lb, N·m) Specified torque

◆ Non-reusable part

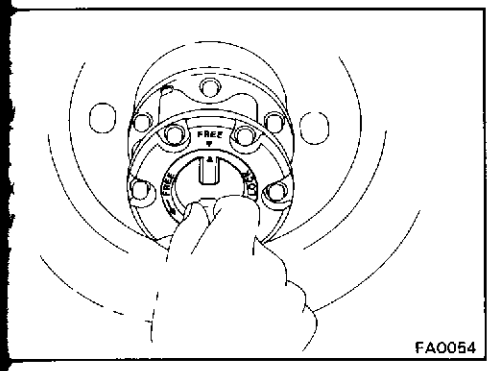

REMOVAL OF FREE WHEELING HUB

(See page SA-6)

1. REMOVE FREE WHEELING HUB COVER

(a) Set the control handle to FREE.

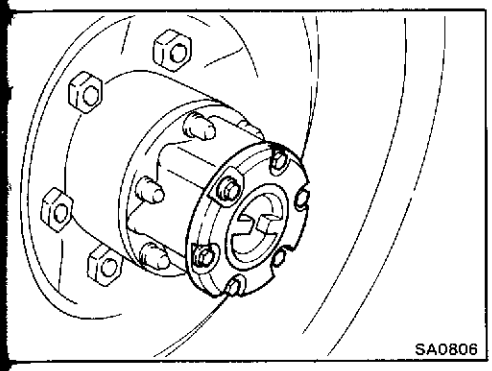

(b) Remove the six cover mounting bolts and pull off the cover.

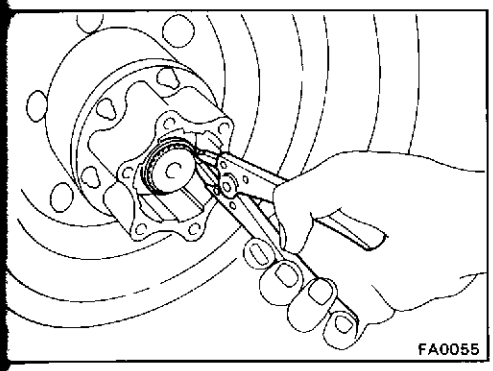

2. REMOVE SNAP RING

Using snap ring pliers, remove the snap ring.

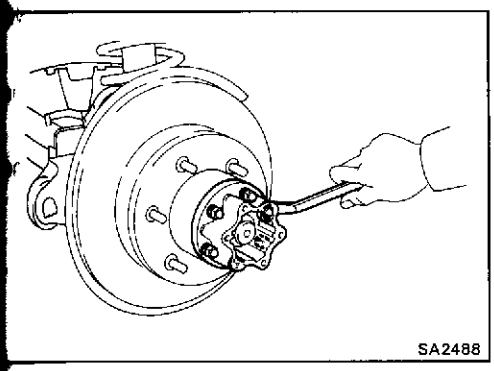

3. REMOVE FREE WHEELING HUB BODY

(a) Remove the six mounting nuts and washers.

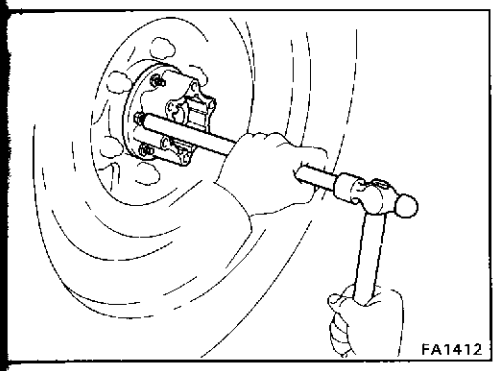

(b) Using a brass bar and hammer, tap on the bolt heads and remove the cone washers.

(c) Pull off the free wheeling hub body.

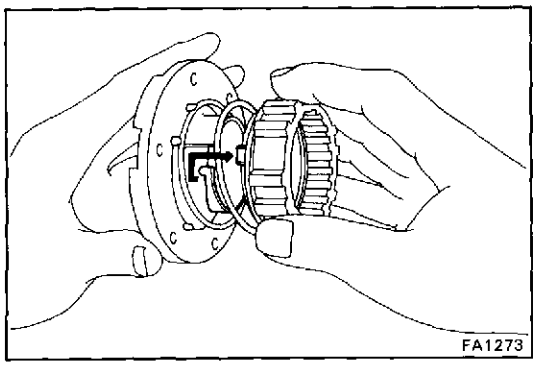
FA1273

DISASSEMBLY OF FREE WHEELING HUB

(See page SA-6)

1. REMOVE CONTROL HANDLE FROM FREE WHEELING HUB COVER

(a) Compressing the spring, remove the pawl tab from the handle cam, and remove the clutch with the two springs and pawl.

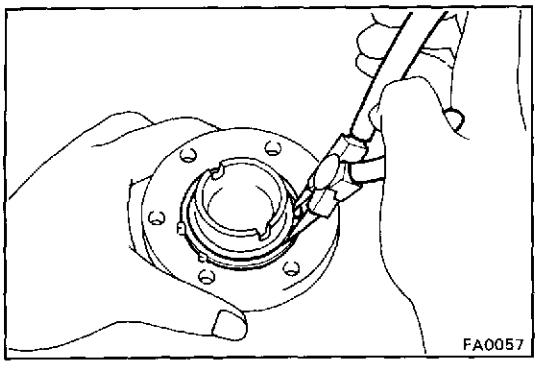
FA0057

(b) Using snap ring pliers, remove the snap ring from the free wheeling hub cover

(c) Remove the control handle from the free wheeling hub cover.

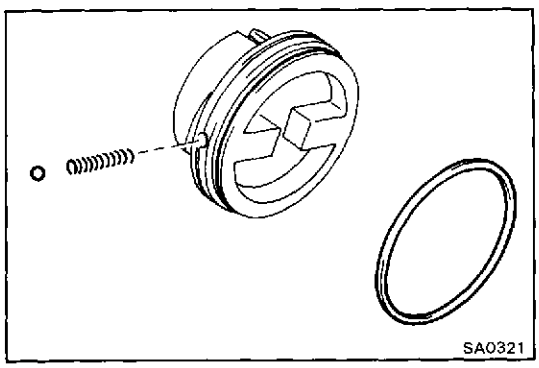
SA0321

(d) Remove the steel ball, spring and seal from the control handle.

2. REMOVE INNER HUB AND FREE WHEELING HUB RING FROM FREE WHEELING HUB BODY

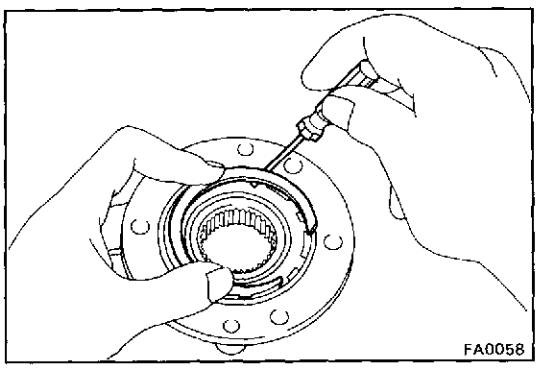
FA0058

(a) Using a screwdriver, remove the snap ring from the free wheeling hub body.

(b) Remove the inner hub with spacer, snap ring and free wheeling hub ring.

3. REMOVE PAWL FROM FREE WHEELING HUB CLUTCH

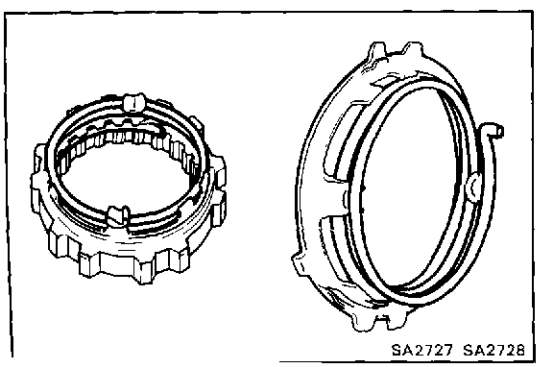
SA2727 SA2728

(a) Remove the pawl with the spring from the clutch.

(b) Remove the spring from the pawl.

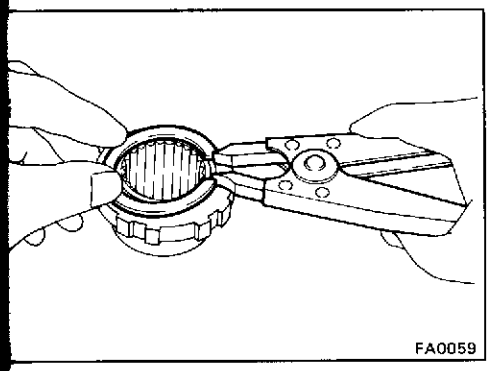
FA0059

4. REMOVE FREE WHEELING HUB RING FROM INNER HUB

(a) Using snap ring pliers, remove the snap ring from the inner hub.

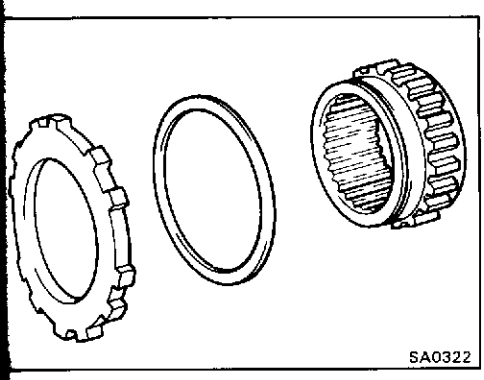
SA0322

(b) Remove the free wheeling hub ring and spacer from the inner hub.

INSPECTION OF FREE WHEELING HUB

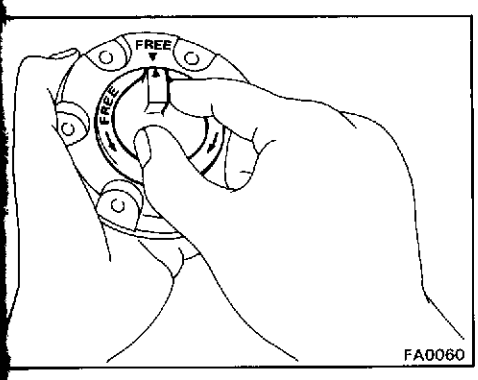

FA0060

1. INSPECT COVER, HANDLE AND SEAL

Temporarily install the handle with seal in the cover and check that the handle moves smoothly and freely.

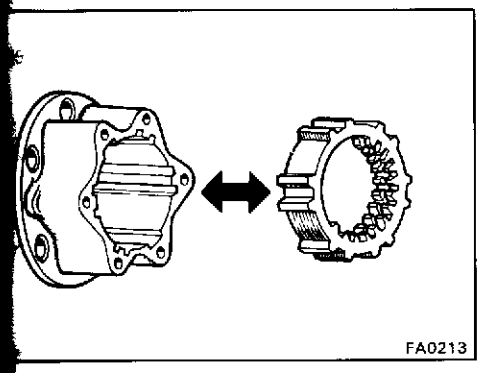
FA0213

2. INSPECT BODY AND CLUTCH

Check that the clutch moves smoothly in the body.

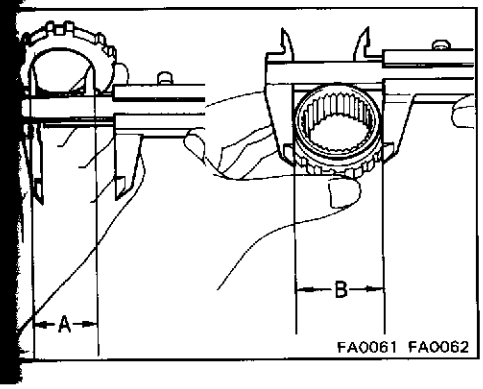

FA0061 FA0062

3. MEASURE OIL CLEARANCE BETWEEN INNER HUB AND FREE WHEELING HUB RING

Oil clearance (A — B): 0.3 mm (0.012 in.)

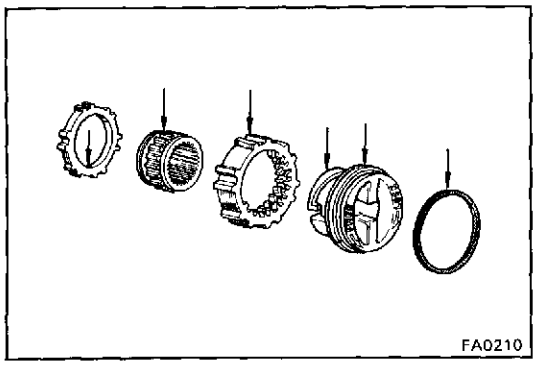

ASSEMBLY OF FREE WHEELING HUB

(See page SA-6)

1. APPLY MP GREASE TO SLIDING SURFACE OF PARTS

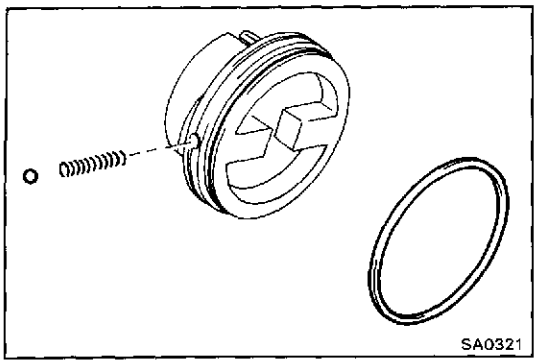

2. INSTALL CONTROL HANDLE TO COVER

(a) Install the seal, spring and steel ball to the handle

(b) Insert the handle in the cover.

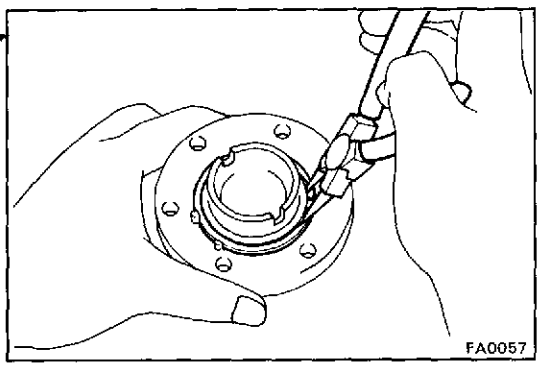

(c) Using snap ring pliers, install the snap ring to the cover.

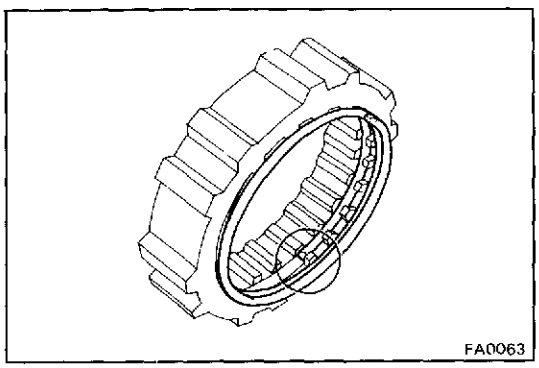

3. INSTALL SPRING ON CLUTCH

Install the tension spring to the clutch with the spring end aligned with the initial groove.

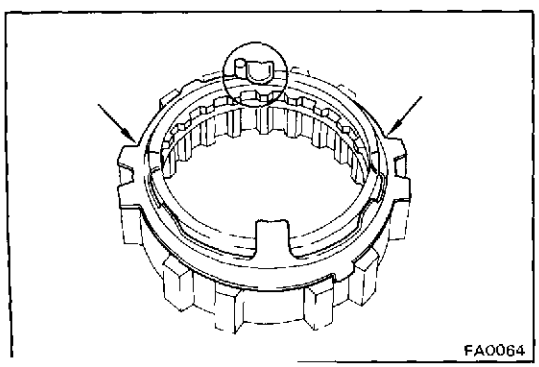

4. INSTALL PAWL TO CLUTCH

(a) Place the pawl on the tension spring with one of the large tabs against the bent spring end.

(b) Place the ring top of the spring on the small tabs

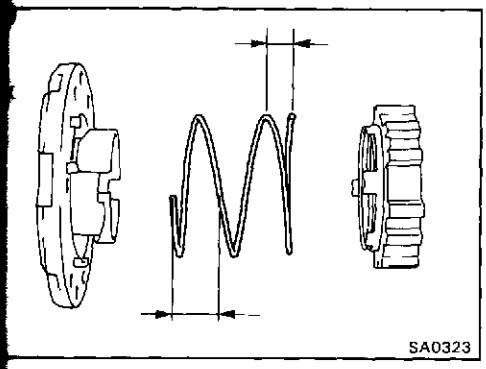

5. INSTALL CLUTCH AND SPRING INTO COVER

(a) Place the spring between the cover and clutch with the large spring end toward the cover.

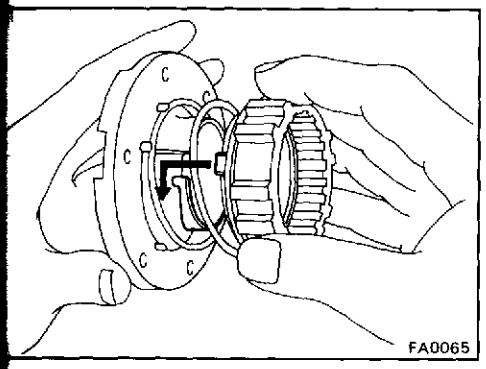

(b) Compress the spring and install the clutch with the pawl tab fit to the handle cam

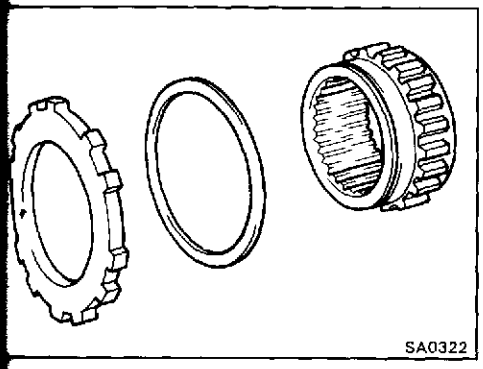

6. INSTALL SPACER AND FREE WHEELING HUB RING TO INNER HUB

(a) Install the spacer and free wheeling hub ring to the inner hub.

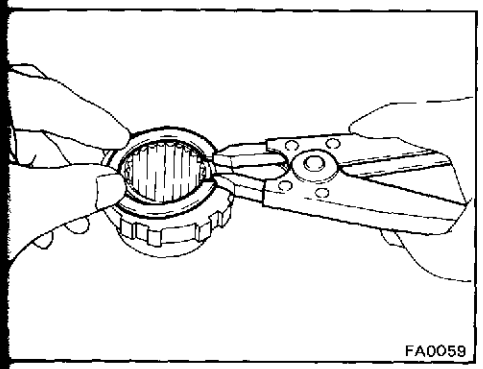

(b) Using snap ring pliers, install the snap ring to the free wheeling hub ring.

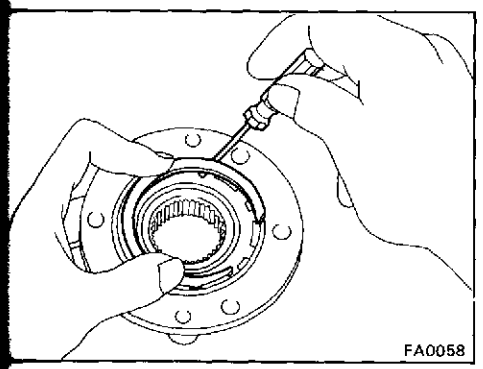

7. INSTALL INNER HUB AND FREE WHEELING HUB RING TO FREE WHEELING HUB BODY

(a) Insert the inner hub and free hub ring to the body.

(b) Using a screwdriver, install the snap ring.

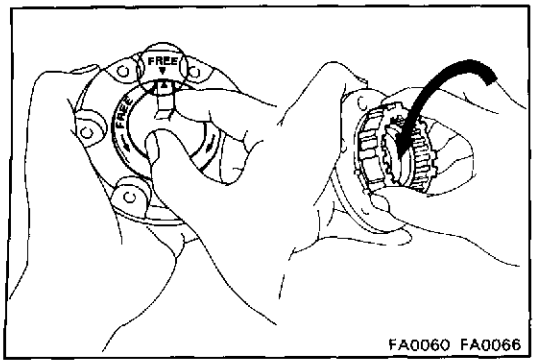

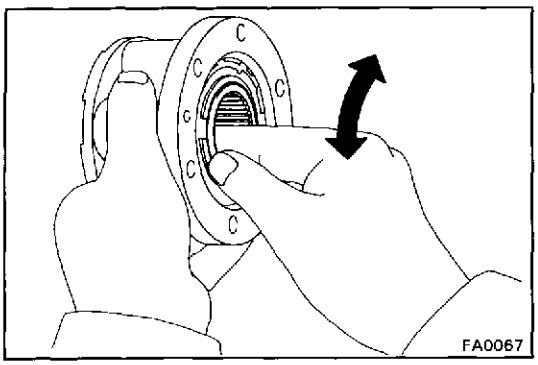

8. TEMPORARILY INSTALL COVER TO BODY AND CHECK FREE WHEELING HUB

(a) Set the control handle and clutch to the "FREE" position.

(b) Insert the cover to the body and check that the inner hub turns smoothly.

(c) Remove the cover from the body.

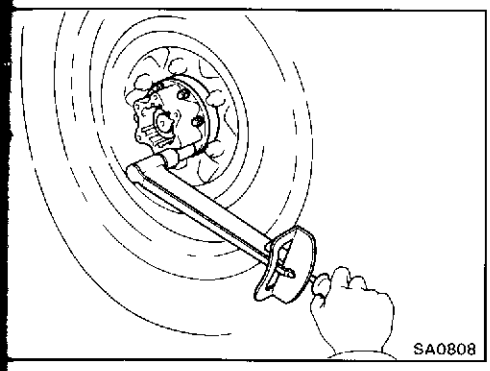
SA0808

INSTALLATION OF FREE WHEELING HUB

(See page SA-6)

1. INSTALL FREE WHEELING HUB BODY

(a) Place a new gasket on the front axle hub.

(b) Install the free wheeling hub body with the six cone washers, washers and nuts. Torque the nuts.

Torque: 315 kg-cm (23 ft-lb, 31 N·m)

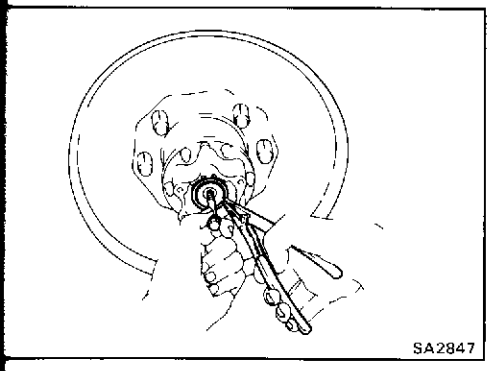
SA2847

2. INSTALL SNAP RING

(a) Install a bolt to the axle shaft and pull it out

(b) Using snap ring pliers, install the snap ring

(c) Remove the bolt.

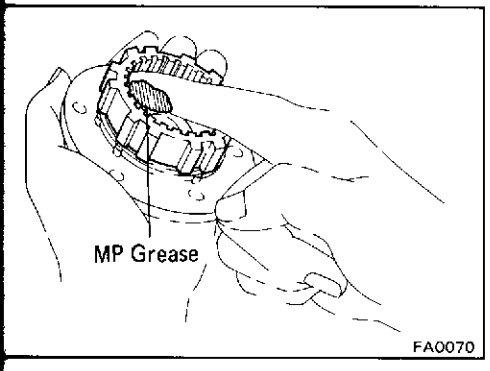

FA0070

3. APPLY MP GREASE TO INNER HUB SPLINES

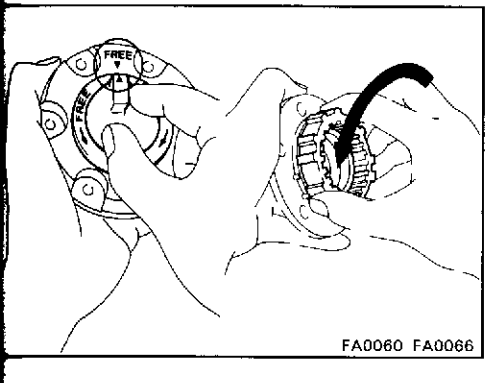

FA0060 FA0066

4. INSTALL FREE WHEELING HUB COVER WITH NEW GASKET

(a) Set the control handle and clutch to the "FREE" position.

(b) Place a new gasket on the cover.

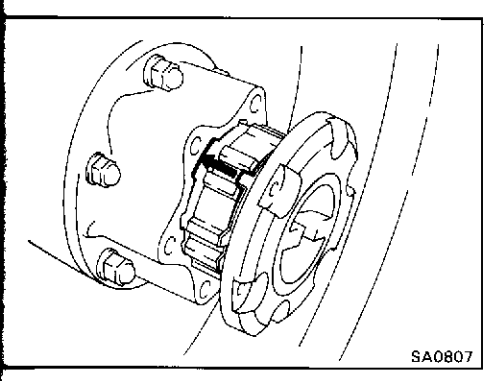
SA0807

(c) Install the cover to the body with the follower pawl tabs aligned with the non-toothed portions of the body.

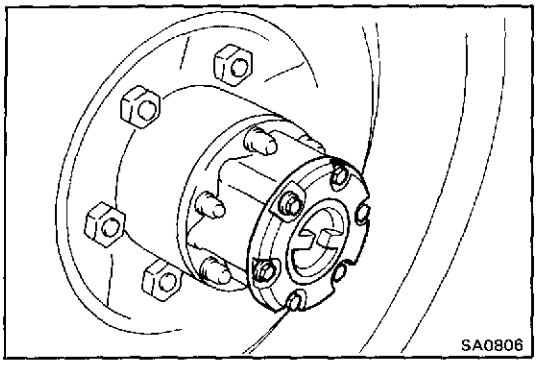

(d) Install and torque the cover mounting bolts.

Torque: 100 kg-cm (7 ft-lb, 10 N·m)

FRONT AXLE HUB

COMPONENTS

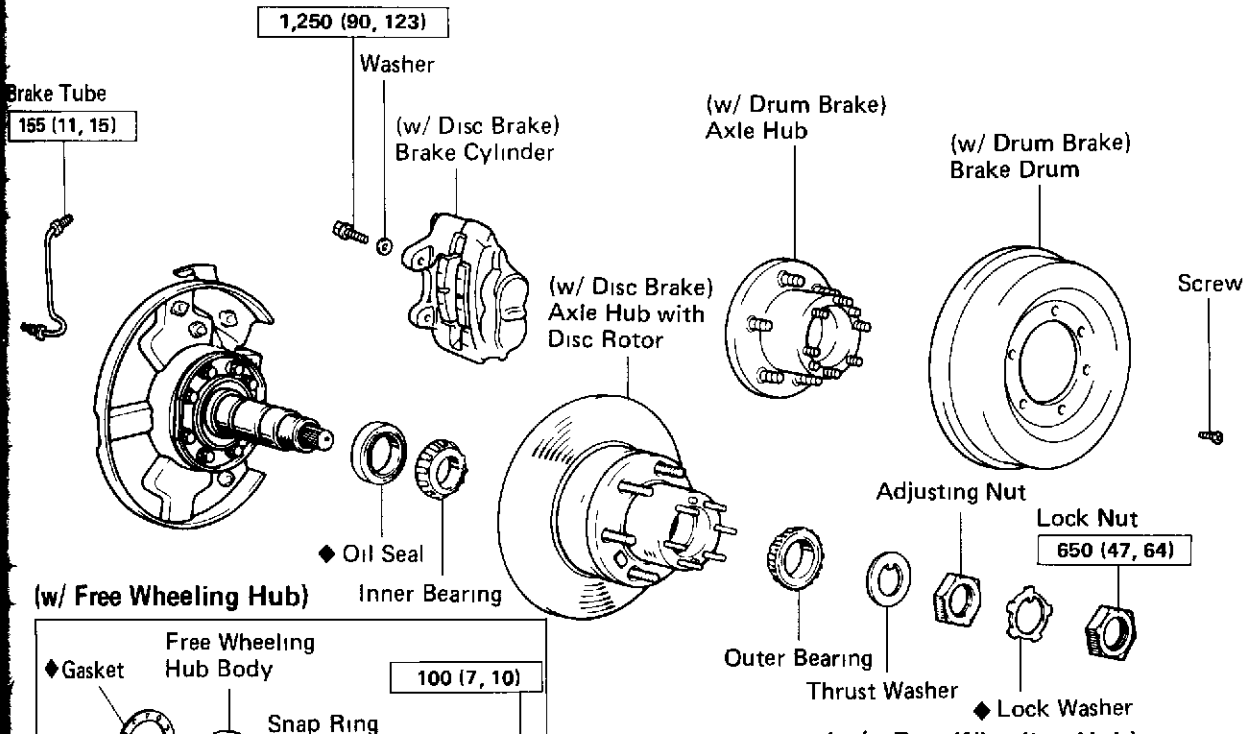

(w/ Free Wheeling Hub)

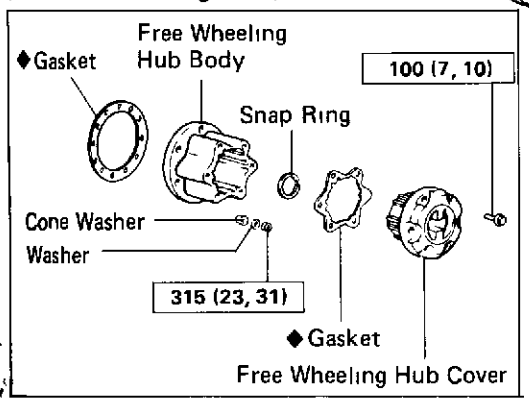

(w/o Free Wheeling Hub)

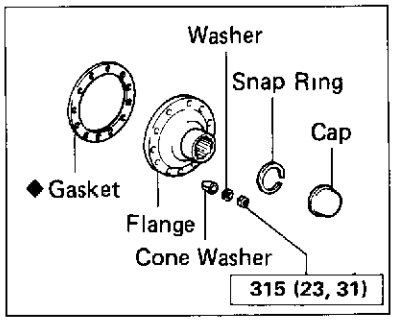

(w/ Power Locking Hub)

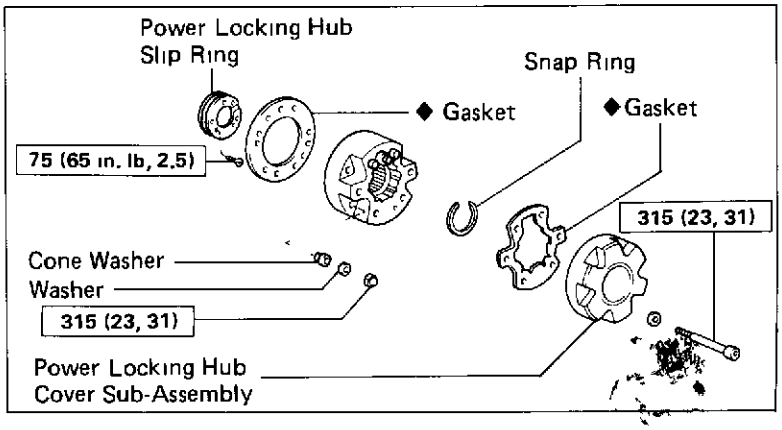

cm (ft-lb, N·m) : Specified torque
◆ Non-reusable part

SA2880
SA2881

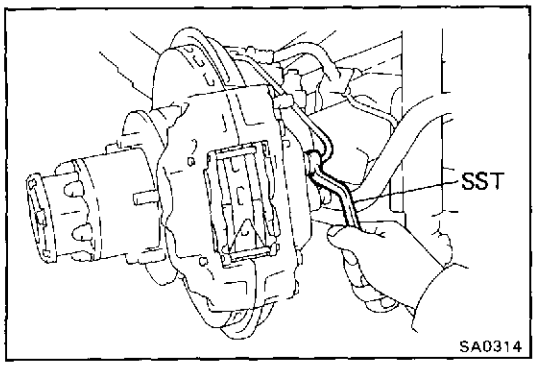

DISASSEMBLY OF FRONT AXLE HUB

(See page SA-29)

1. **(w/ DISC BRAKE)**
   REMOVE DISC BRAKE CYLINDER

   (a) Using SST, disconnect the brake tube.

   SST 09751-36011

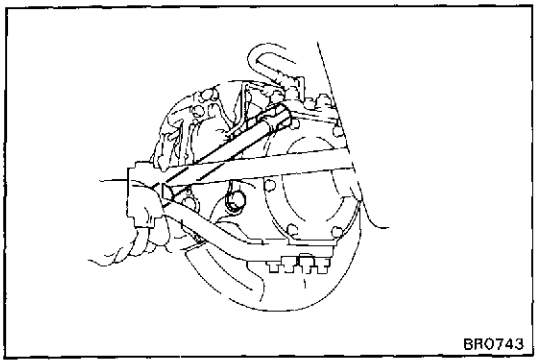

   (b) Remove the two bolts and brake cylinder.

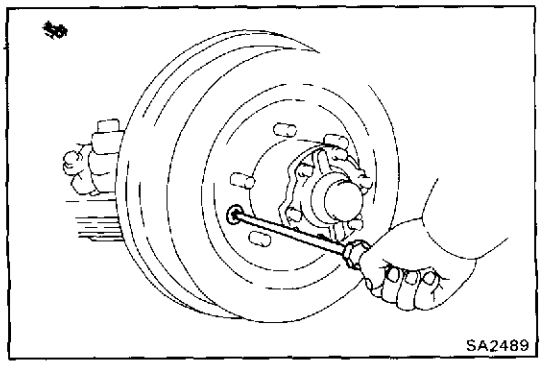

2. **(w/ DRUM BRAKE)**
   REMOVE BRAKE DRUM

   (a) Remove the screw from the drum.

   (b) Pull out the brake drum.

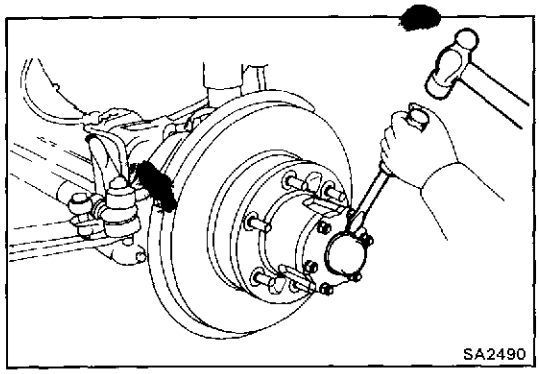

3. **REMOVE FLANGE, FREE WHEELING HUB OR POWE LOCKING HUB**

   HINT:

   - If the vehicle has the free wheeling hub, see page SA 6.
   - If the vehicle has the power locking hub, page SA 23

   (a) Using a screwdriver and hammer, remove the ca from the flange.

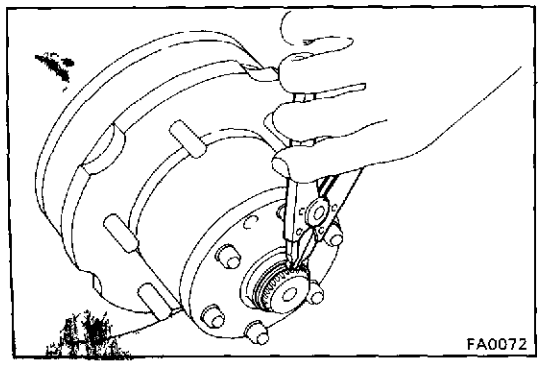

   (b) Using snap ring pliers, remove the snap ring.

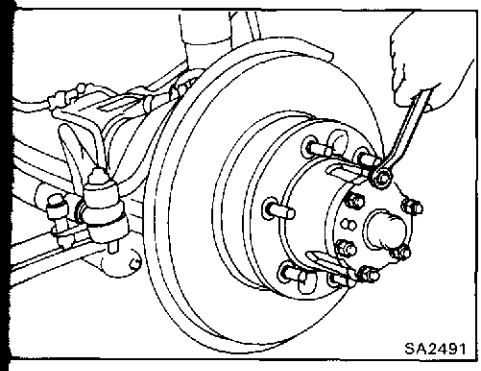

(c) Remove the six mounting nuts and washers.

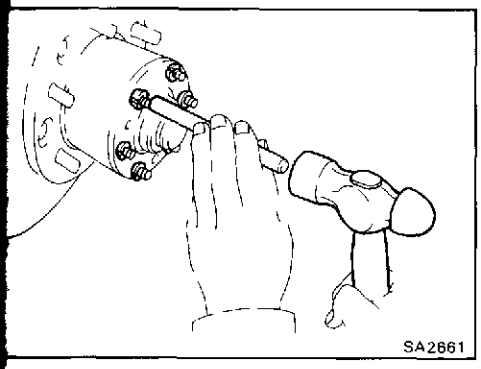

(d) Using a brass bar and hammer, tap the bolt heads and remove the cone washers

(e) Pull out the flange.

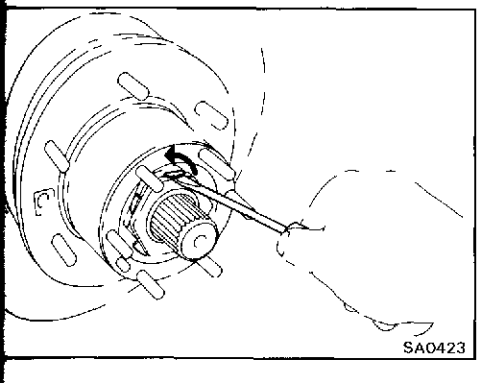

4. REMOVE AXLE HUB

(a) Using a screwdriver, loosen the staked part of the lock washer.

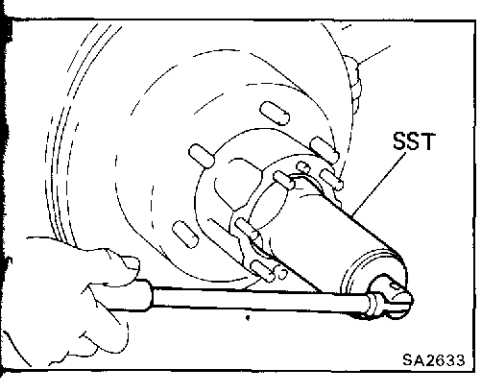

(b) Using SST, remove the lock nut

SST 09607-60020

(c) Remove the lock washer

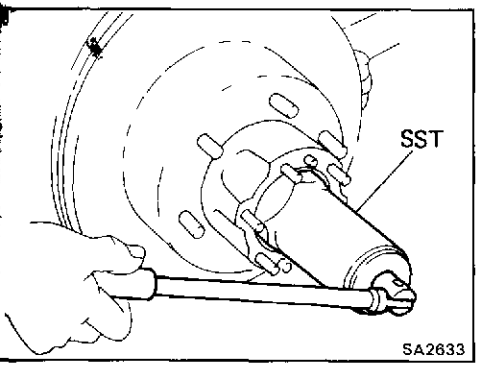

(d) Using SST, remove the adjusting nut.

SST 09607-60020

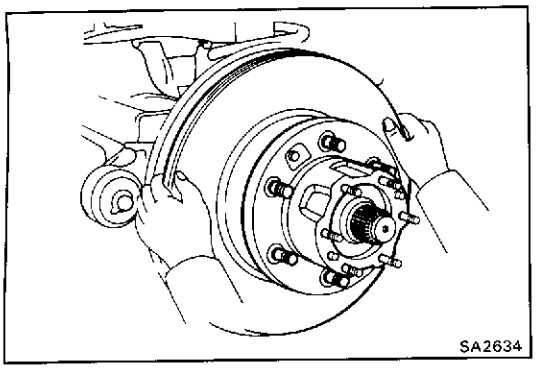
SA2634

(e) (w/ Disc Brake)
Remove the axle hub with the disc rotor.

HINT: (w/ Power Locking Hub)
Before removing the boot, wrap vinyl tape around the tip of the spindle.

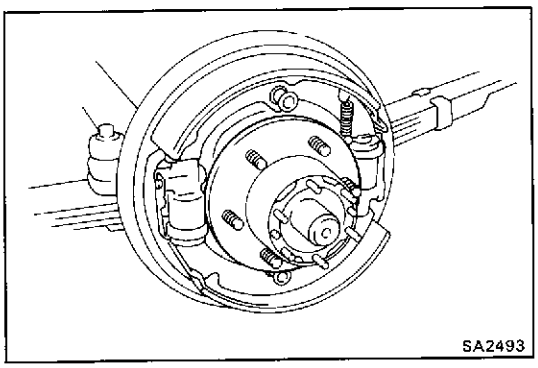
SA2493

(f) (w/ Drum Brake)
Remove the axle hub.

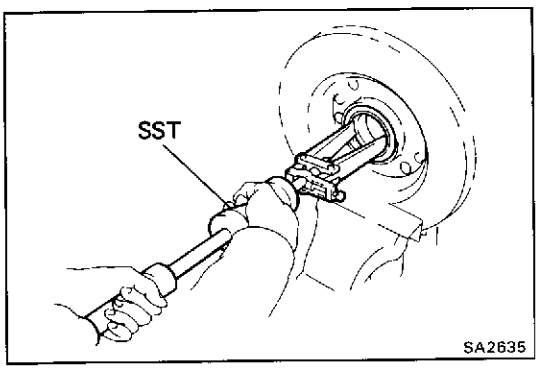

SA2635

5. REMOVE INNER BEARING AND OIL SEAL

(a) Using SST, remove the oil seal.

SST 09308-00010

(b) Remove the inner bearing from the axle hub.

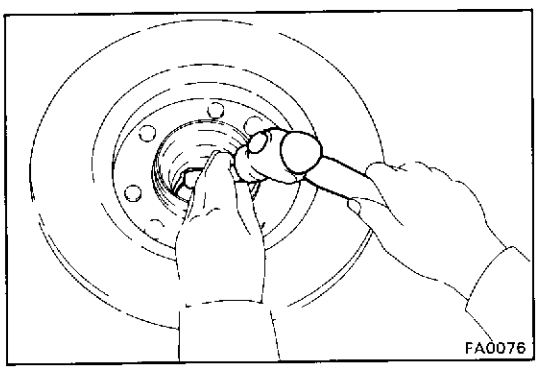
FA0076

INSPECTION AND REPAIR OF FRONT AXLE HUB

1. INSPECT BEARING

Clean the bearings and outer races and inspect them for wear or damage.

2. REPLACE BEARING OUTER RACE

(a) Using a brass bar and hammer, drive out the bearing outer race.

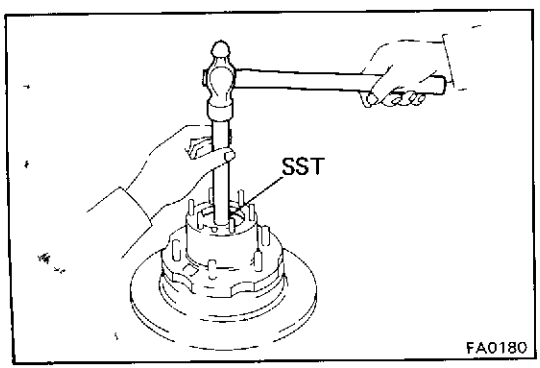

FA0180

(b) Using SST, carefully drive in a new bearing outer race

SST 09608-35014

Inner Bearing (09608-06020, 09608-06210)
Outer Bearing (09608-06020, 09608-06200)

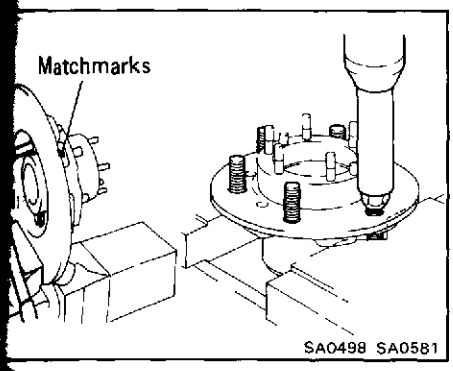

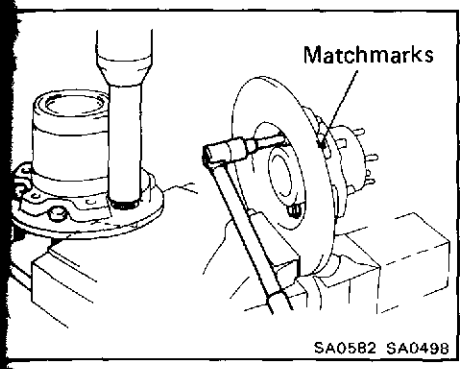

3. REPLACE HUB BOLTS

(a) Place matchmarks on the axle hub and rotor disc

(b) Remove the six bolts and rotor disc from the axle hub.

(c) Install the nut to the hub bolts.

(d) Using an extension bar and press, press out the hub bolts.

(e) Using an extension bar and press, press in the hub bolts.

(f) Align the matchmarks install the axle hub to the rotor disc.

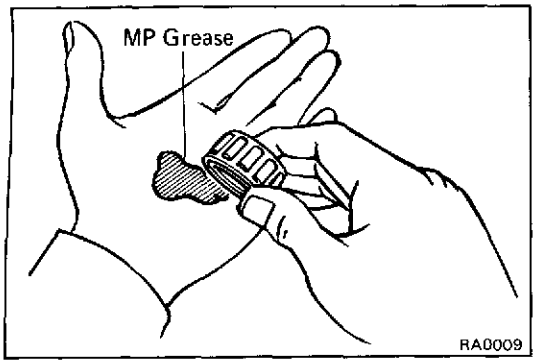

ASSEMBLY OF FRONT AXLE HUB

(See page SA-29)

1. PACK BEARINGS WITH MP GREASE

(a) Place MP grease in the palm of your hand.

(b) Pack grease into the bearing, continuing until the grease oozes out from the other side.

(c) Do the same around the bearing circumference.

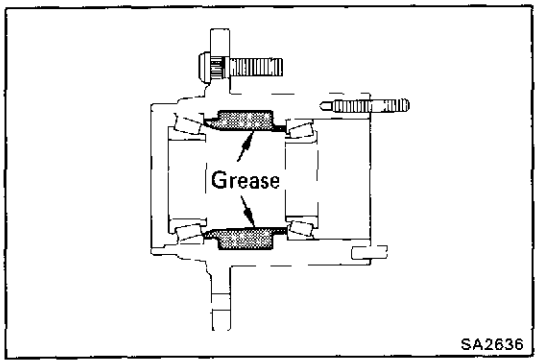

2. PACK INSIDE OF HUB WITH MP GREASE

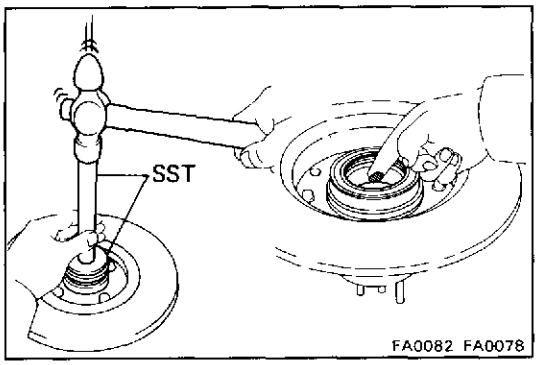

3. INSTALL INNER BEARING AND OIL SEAL

(a) Place inner bearing into the hub.

(b) Using SST, drive in the oil seal into the hub.

SST 09608-35014 (09608-06020, 09608-06150)

(c) Coat the oil seal with MP grease

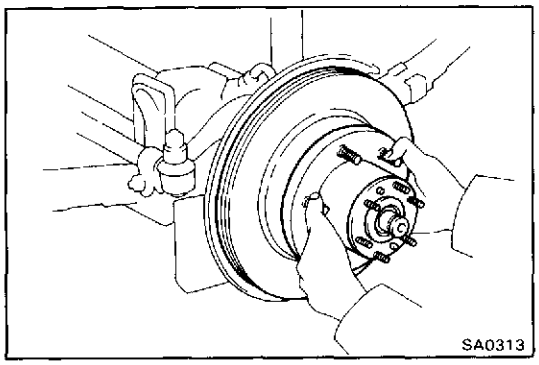

4. INSTALL AXLE HUB ON SPINDLE

(a) Place the axle hub on the spindle.

(b) Install the outer bearing and thrust washer.

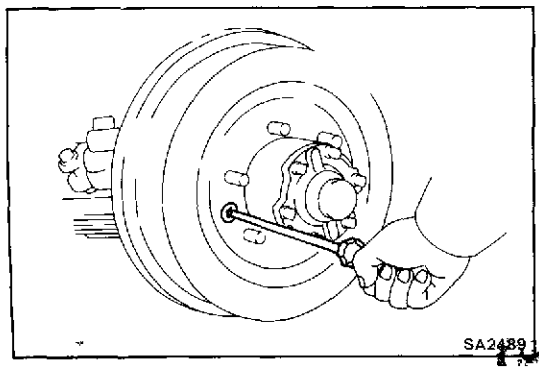

5. (w/ DRUM BRAKE) INSTALL BRAKE DRUM

(a) Install the brake drum to the axle hub

(b) Install the screw to the brake drum.

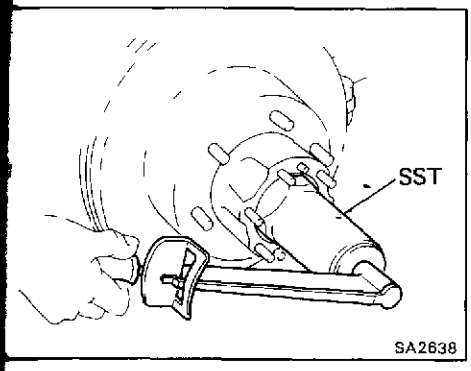

6. ADJUST PRELOAD

(a) (w/ Power Locking Hub)
Remove the vinyl tape from the tip of spindle.

(b) Using SST, torque the bearing adjusting nut.

SST 09607-60020

Torque: 600 kg-cm (43 ft-lb, 59 N·m)

HINT: Be careful not to damage the oil seal

(c) Turn the hub right and left two or three times.

(d) Loosen the nut until it can be turned by hand.

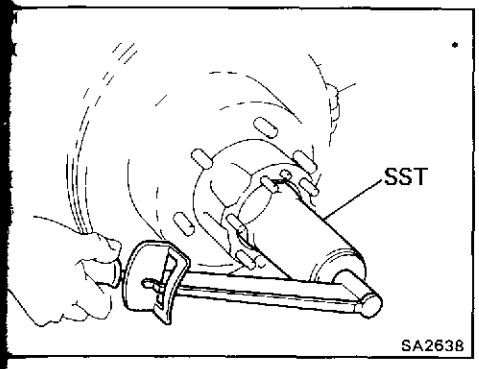

(e) Using SST, retorque the bearing adjusting nut.

SST 09607-60020

Torque: 600 kg-cm (43 ft-lb, 59 N·m)

(f) Loosen the nut until it can be turned by hand

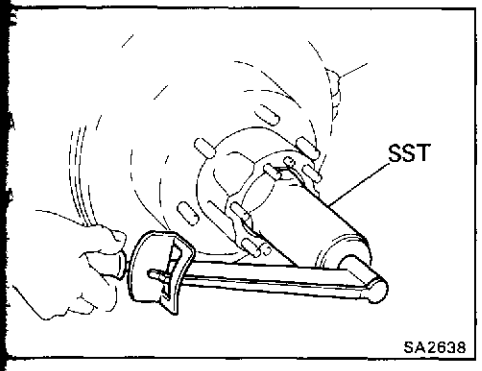

(g) Retorque the adjusting nut.

SST 09607-60020

Torque: 55 kg-cm (48 in.-lb, 5.4 N·m)

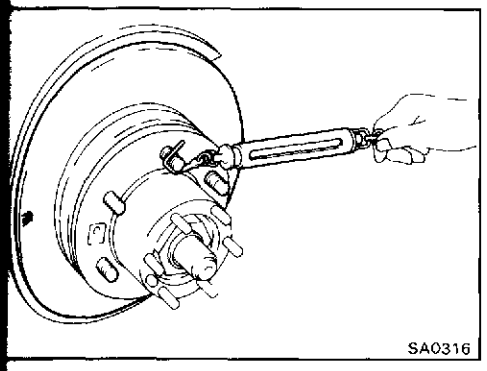

(h) Using a spring tension gauge, measure the preload.

Preload (starting):
Preload 2.8 — 5.7 kg
(6.2 — 12.6 lb, 27 — 56 N)

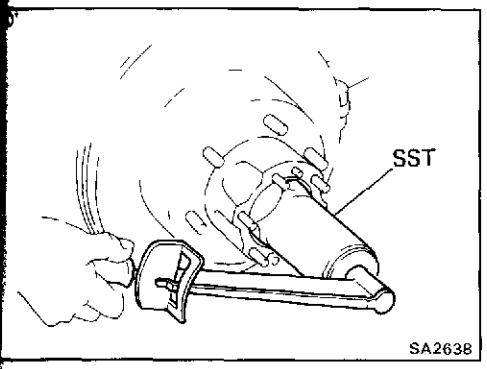

7. INSTALL LOCK WASHER AND LOCK NUT

(a) Install the lock washer and lock nut.

(b) Using SST, torque the lock nut.

SST 09607-60020

Torque: 650 kg-cm (47 ft-lb, 64 N·m)

(c) Check that the bearing has no play

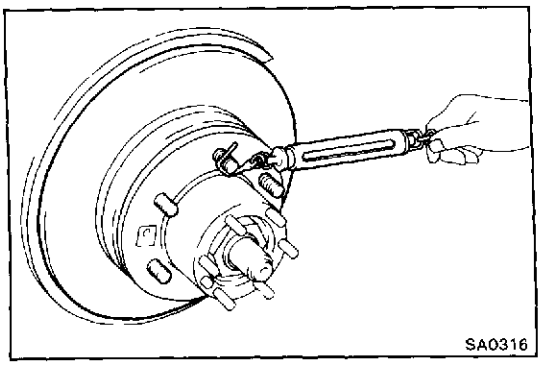
SA0316

(d) Using a spring tension gauge, check the preload.

Preload (starting):
Preload 2.8 — 5.7 kg
(6.2 — 12.6 lb, 27 — 56 N)

If not within specification, adjust with the adjusting nut

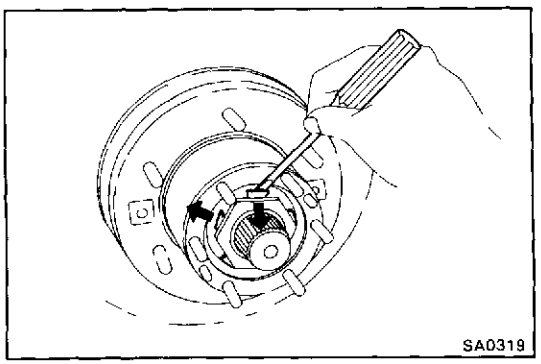
SA0319

(e) Secure the lock nut by bending one of the lock washer tooth inward and another lock washer tooth outward

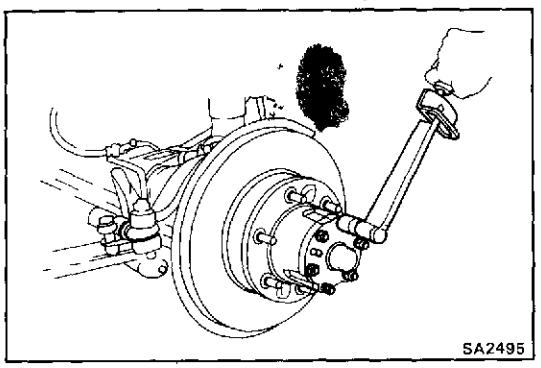
SA2495

8. INSTALL FLANGE, FREE WHEELING HUB OR POWER LOCKING HUB

HINT:

- If the vehicle has the free wheeling hub, see page SA-13
- If the vehicle has the power locking hub, see page SA-26.

(a) Place a new gasket in position on the axle hub.

(b) Install the flange to the axle hub.

(c) Install the six cone washers, washers and nuts. Torque the nuts.

Torque: 315 kg-cm (23 ft-lb, 31 N·m)

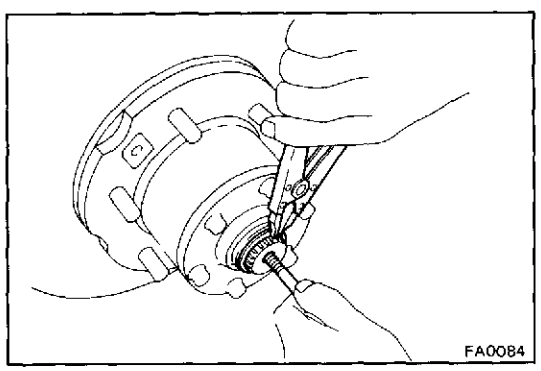
FA0084

(d) Install a bolt to the axle shaft and pull it out.

(e) Using snap ring pliers, install the snap ring.

(f) Remove the bolt from the axle shaft.

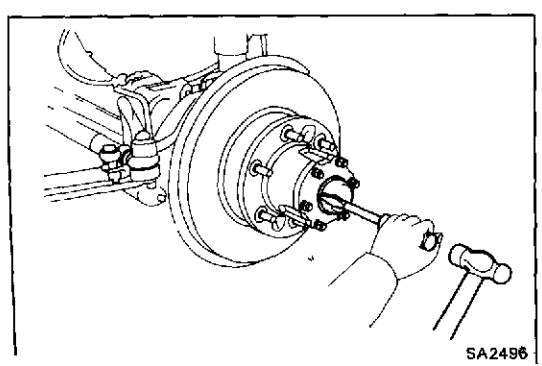
SA2496

(g) Using a hammer and screwdriver, install the cap to the flange

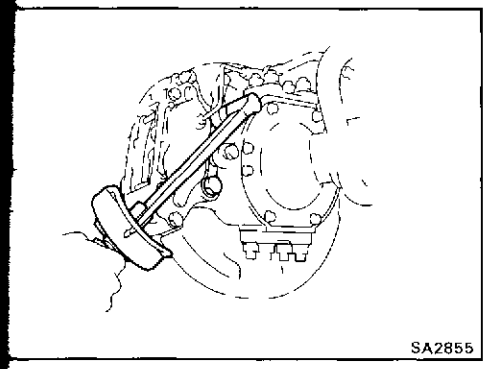
SA2855

9. **(w/ DISC BRAKE)**
INSTALL BRAKE CYLINDER

(a) Install the brake cylinder to the steering knuckle with the two bolts.
Torque the mounting bolts.

Torque: 1,250 kg-cm (90 ft-lb, 123 N·m)

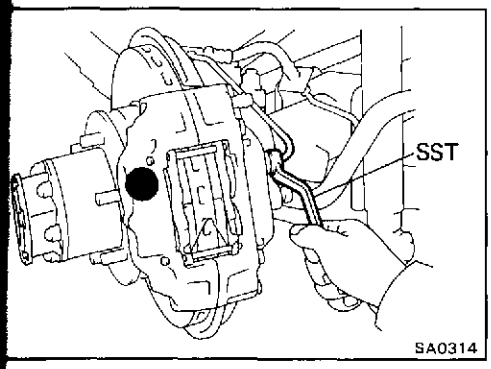

SA0314

(b) Using SST, connect the brake tube
SST 09751-36011

Torque: 155 kg-cm (11 ft-lb, 15 N·m)

10. **BLEED BRAKE LINE**
(See page BR-7)

STEERING KNUCKLE AND AXLE SHAFT

COMPONENTS

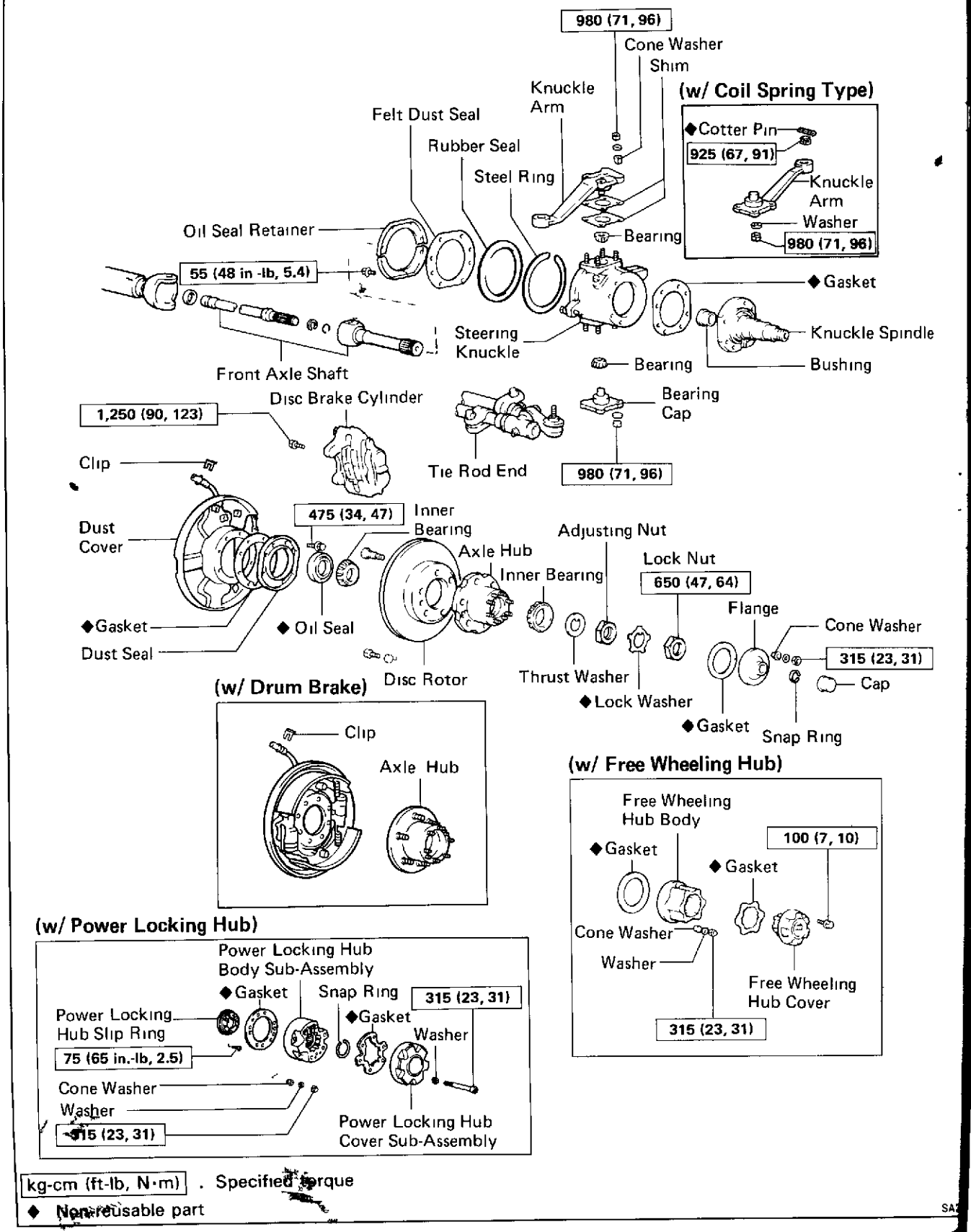

kg-cm (ft-lb, N·m) : Specified torque

◆ Non-reusable part

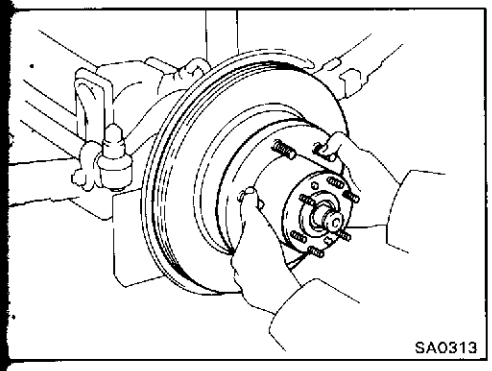
SA0313

DISASSEMBLY OF STEERING KNUCKLE AND AXLE SHAFT

(See page SA-38)

1. **REMOVE FRONT AXLE HUB**
(See page SA-29)

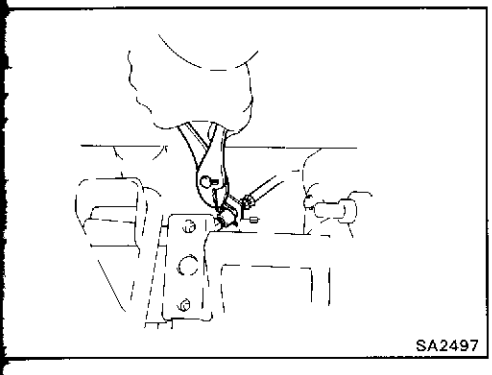
SA2497

2. **DISCONNECT BRAKE HOSE**

(a) Using pliers, remove the clip.

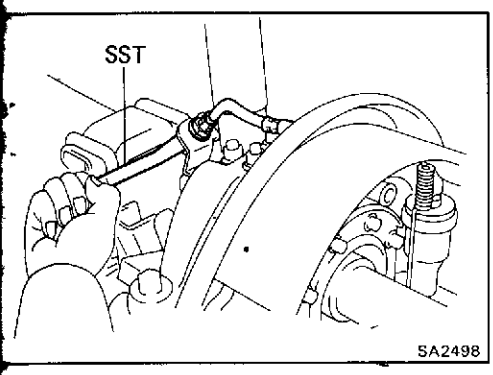

SA2498

(b) Using SST, disconnect the brake tube.

SST 09751-36011

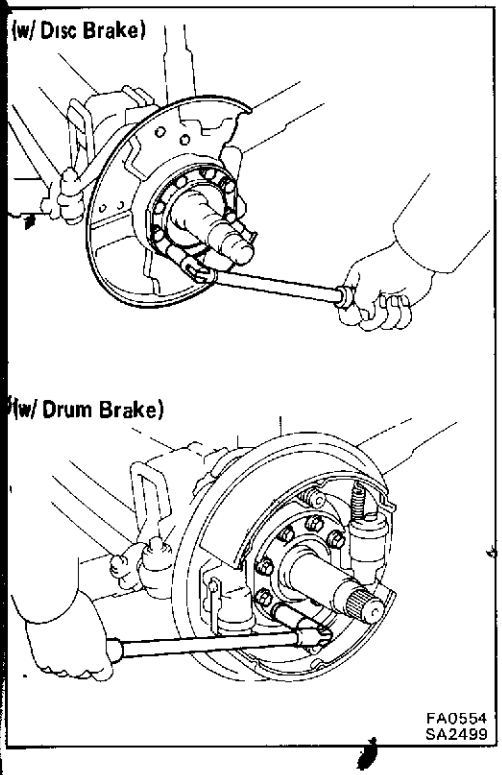

FA0554
SA2499

3. **REMOVE KNUCKLE SPINDLE MOUNTING BOLTS**

4. **REMOVE DUST SEAL AND DUST COVER**

Remove the eight bolts, dust seal, dust cover and gasket

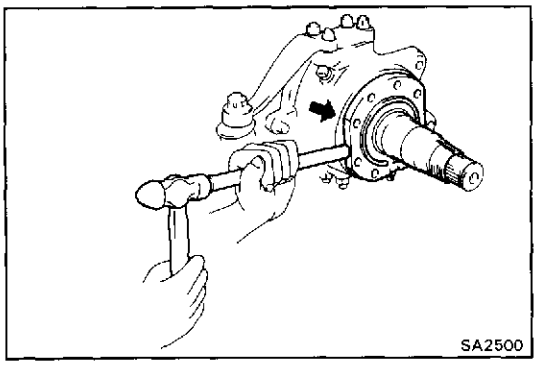
SA2500

5. REMOVE KNUCKLE SPINDLE

(a) (w/ Power Locking Hub)
Disconnect the connector.

(b) Using a brass bar and hammer, drive out the knuckle spindle from the steering knuckle.

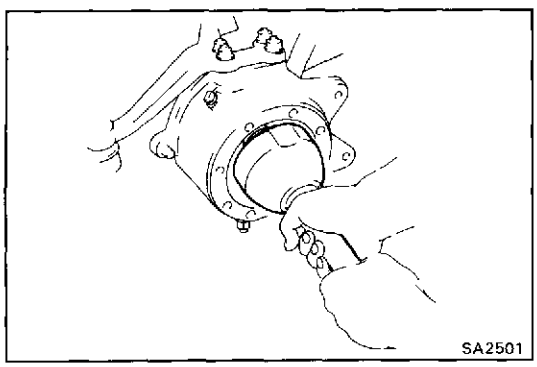
SA2501

6. REMOVE AXLE SHAFT

Position one flat part of the outer shaft upward and pull out the axle shaft

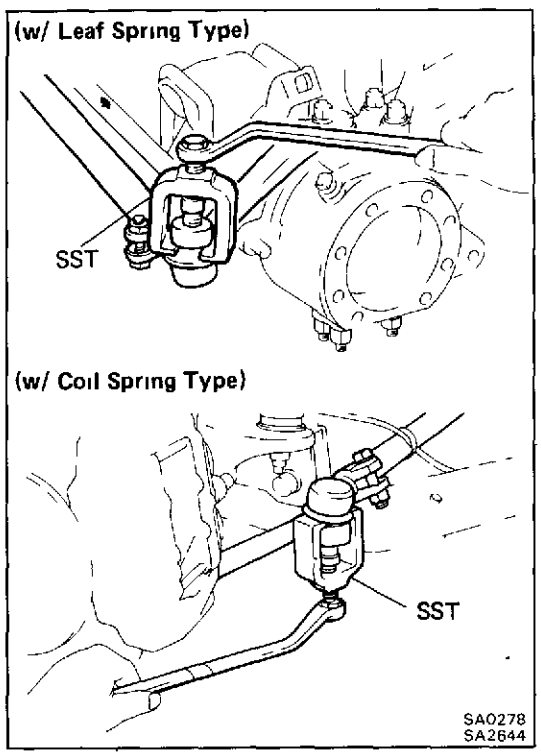

SA0278
SA2644

7. DISCONNECT TIE ROD END FROM KNUCKLE ARM

(a) Remove the cotter pin and castle nut.

(b) Using SST, disconnect the tie rod end from the knuckle arm.

SST 09611-22012

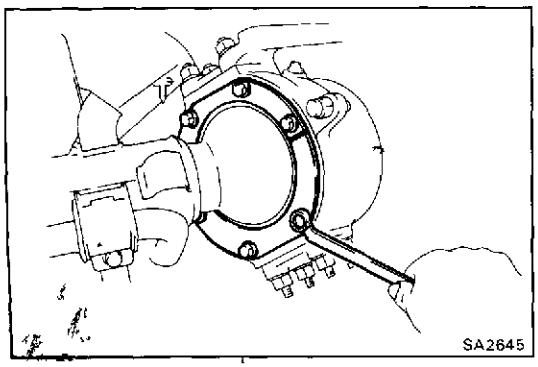
SA2645

8. REMOVE OIL SEAL RETAINER, STEEL RING, RUBBER SEAL AND FELT DUST SEAL

Remove the six bolts and the oil seal retainer, steel ring, rubber seal and felt dust seal.

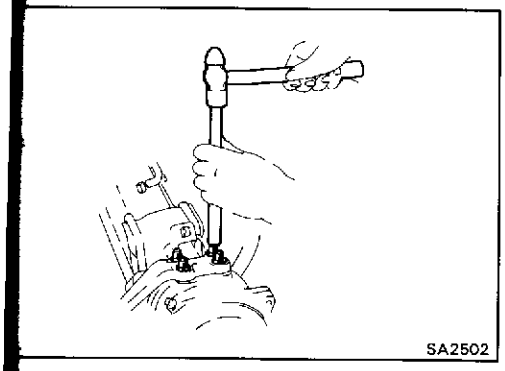
SA2502

9. REMOVE KNUCKLE ARM AND BEARING CAP

(a) Remove the knuckle arm and bearing cap mounting nuts.

(b) Using a brass bar, tap the slits of the cone washers and remove them from the knuckle arm.

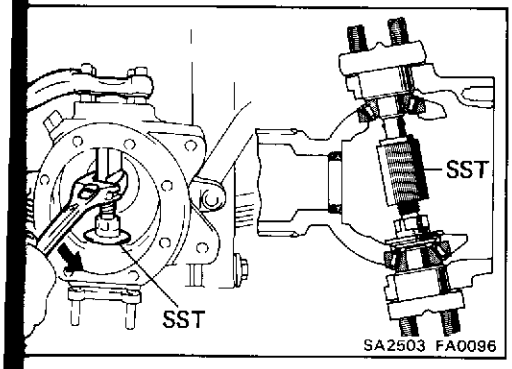

SA2503 FA0096

(c) Using SST, push out the knuckle arm and shims from the steering knuckle.

SST 09606-60020

HINT: Use the SST without a collar.

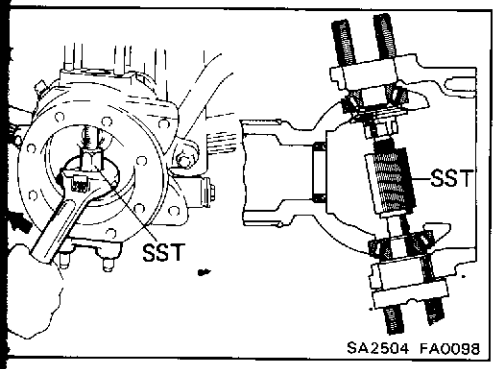

SA2504 FA0098

(d) Using SST, push out the bearing cap from the steering knuckle.

SST 09606-60020

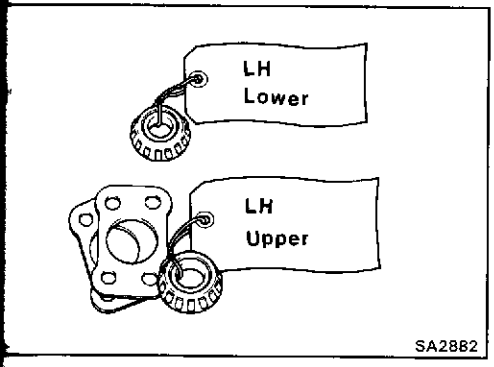

SA2882

10. REMOVE STEERING KNUCKLE AND BEARING

HINT. Mark the removed adjusting shims and bearings so as to enable reassembling them to their proper positions

INSPECTION AND REPAIR OF STEERING KNUCKLE AND AXLE SHAFT

1. INSPECT KNUCKLE SPINDLE

Clean the knuckle spindle and inspect the bushing for wear or damage.

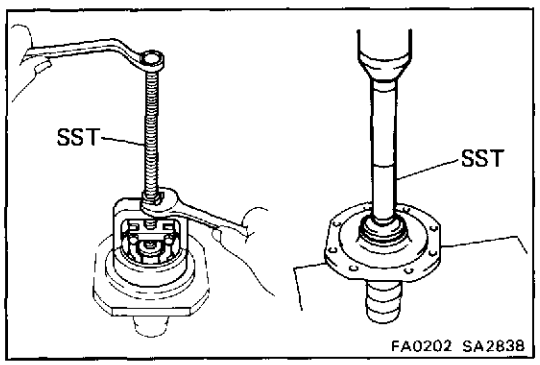

2. REPLACE BUSHING

(a) Using SST, remove the bushing.

SST 09612-65014 (09612-01020, 09612-01050)

(b) Using SST, press a new bushing into the spindle.

SST 09618-60010

3. INSPECT BEARINGS AND OUTER RACES

Clean the bearings and outer races and inspect them for wear or damage.

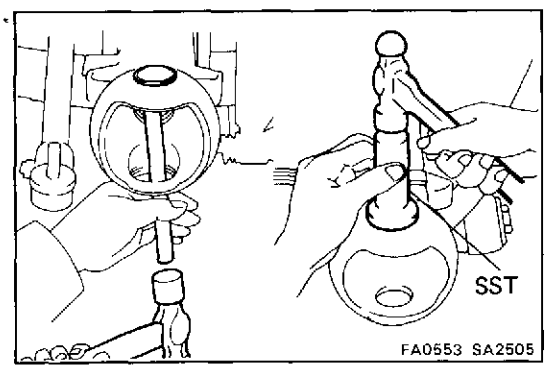

4. IF NECESSARY, REPLACE BEARING OUTER RACE

(a) Using a brass bar, drive out the bearing outer race.

(b) Using SST, carefully drive in a new bearing outer race.

SST 09605-60010

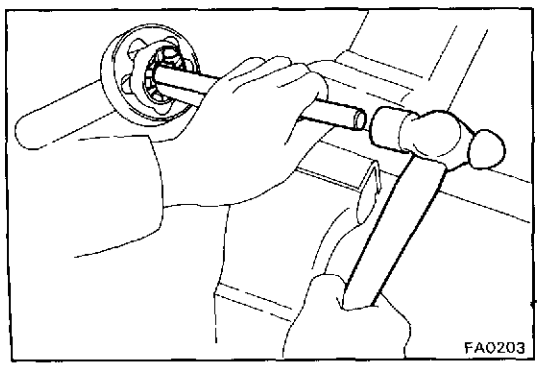

5. INSPECT BIRFIELD JOINT INNER PARTS

(a) Hold the inner shaft in a vise.

(b) Place a brass bar against the joint inner race and drive out the outer shaft.

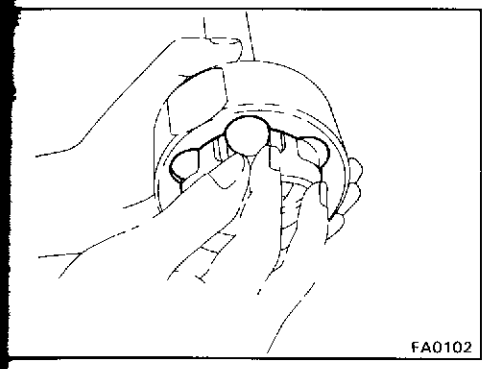

(c) Tilt the inner race and cage, then take out the bearing balls one by one.

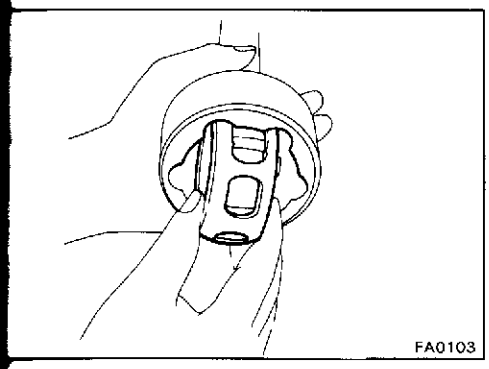

(d) Fit the two large openings in the cage against the protruding parts of the outer shaft, and pull out the cage and inner race.

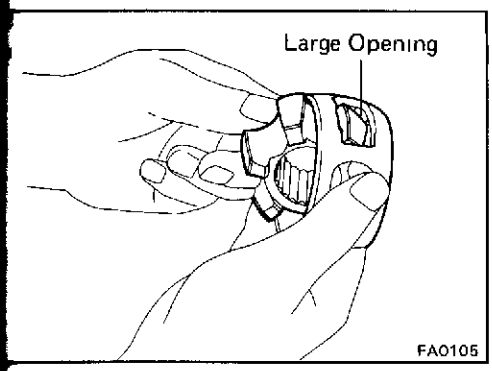

(e) Take out the inner race from the cage through the large opening.

(f) Clean and inspect the joint inner parts for wear or damage

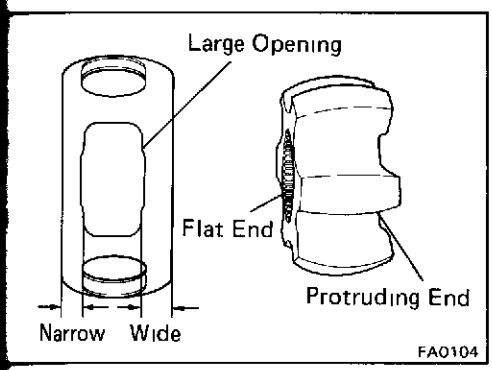

(g) Coat the joint inner parts and outer shaft inside with molybdenum disulphide lithium base grease.

(h) Insert the inner race in the cage through the large opening.

(i) Position the protruding end of the inner race toward the wide side of the cage.

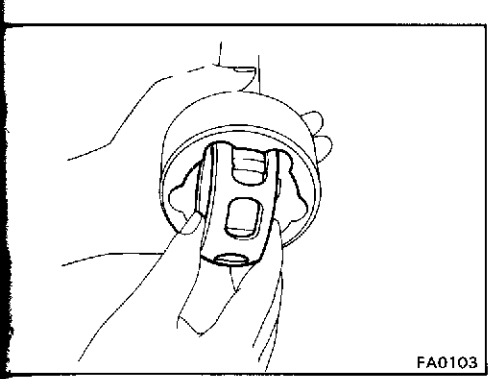

(j) Assemble the cage and inner race to the outer shaft by fitting the two large openings in the cage against the protruding parts of the outer shaft.

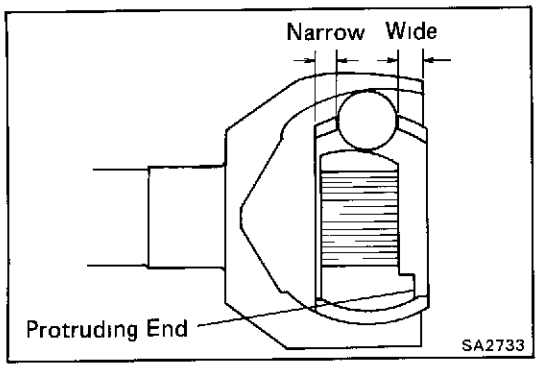

(k) Make sure to position the wide side of the cage and the inner race protruding end outward.

(l) Fit in the inner race and cage, and install the six bearing balls in the outer shaft. (See step (c))

(m) Pack molybdenum disulphide lithium base grease in the outer shaft.

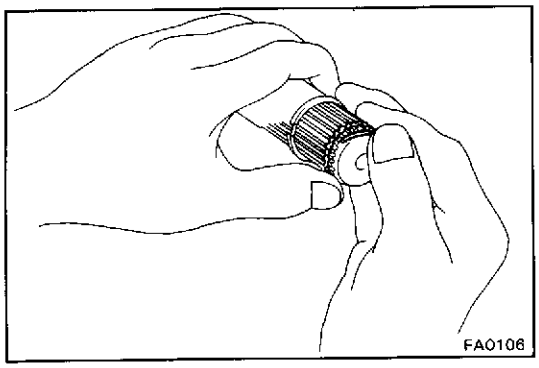

(n) Install a new snap rings to the inner shaft.

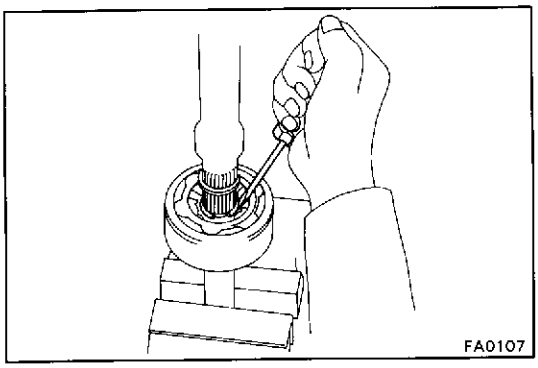

(o) Hold the outer shaft in a vise and, while compressing the inner snap ring, install the inner shaft to the outer shaft.

(p) Check that the inner shaft cannot be pulled out.

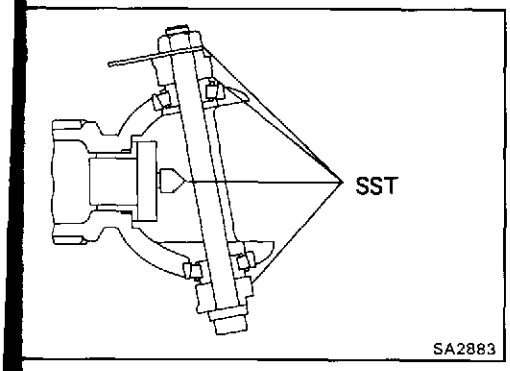

ADJUSTMENT OF STEERING KNUCKLE ALIGNMENT AND BEARING PRELOAD

HINT: Whenever the axle housing or the steering knuckle is replaced, the steering knuckle alignment and knuckle bearing preload are to be adjusted with SST.

SST 09634-60013

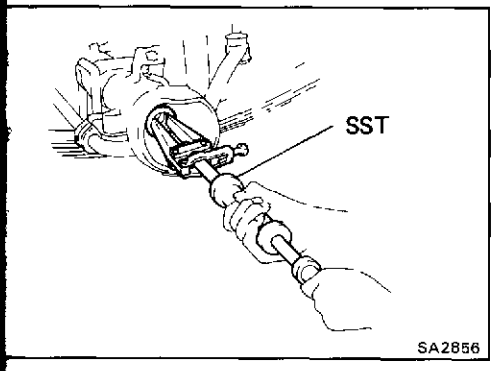

1. ADJUST BEARING PRELOAD

(a) Using SST, remove the oil seal.

SST 09308-00010

(b) Coat the knuckle bearings lightly with molybdenum disulphide lithium base grease.

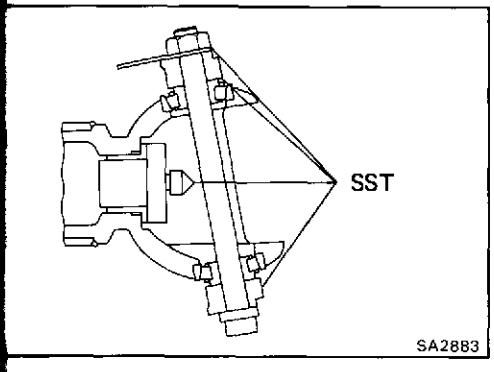

(c) Mount SST to the housing with the bearings.

SST 09634-60013

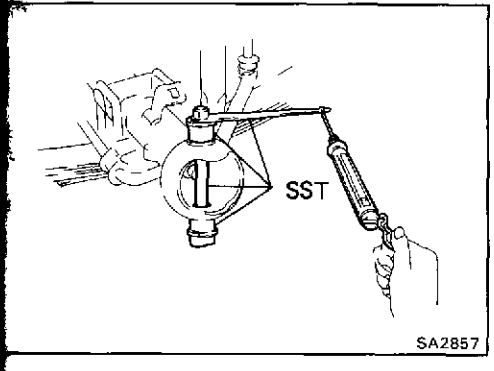

(d) Add preload to the bearings by tightening the nut. Using a spring tension gauge, measure the preload.

Preload (starting): 3.0 — 6.0 kg (6.6 — 13.2 lb, 29 — 59 N)

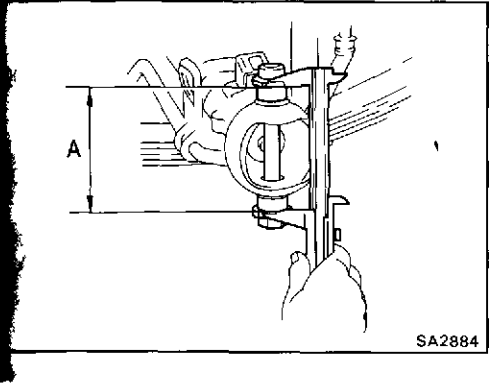

(e) Measure distance A.

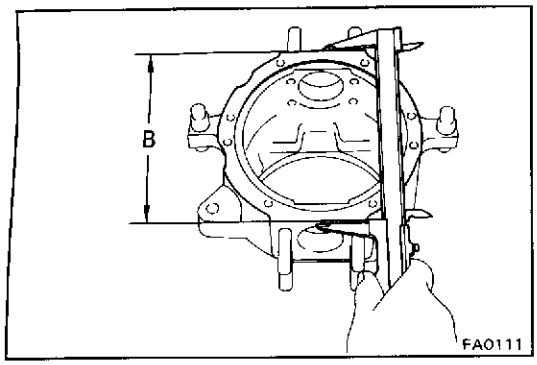

(f) Measure distance B.
The difference between A and B is the total adjusting shim thickness that is required to maintain the correct bearing preload.

TOTAL SHIM THICKNESS (C)
C = A — B

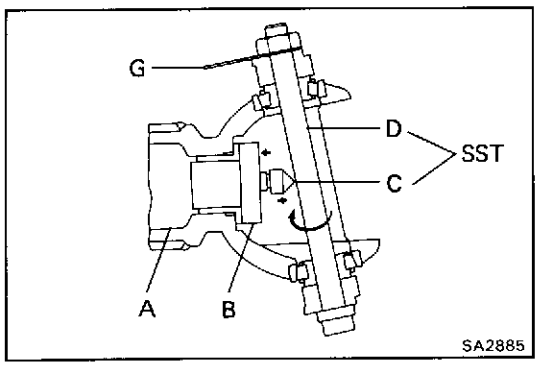

2. ADJUST STEERING KNUCKLE ALIGNMENT

(a) Apply a light coat of red lead on the center part of rod D.

(b) Press adapters A and B against the housing, press plug C against the rod D, and turn lever G so that a line will be described on rod D

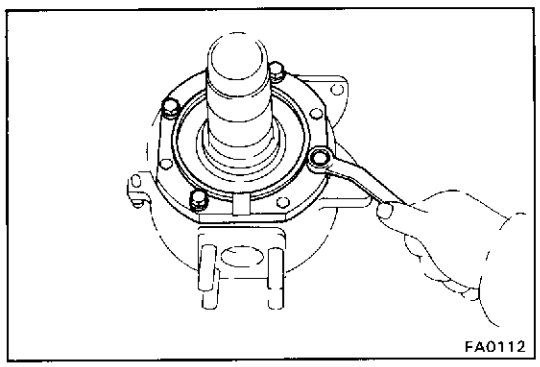

(c) Temporarily install the spindle to the knuckle.
Temporarily torque the four bolts and washers

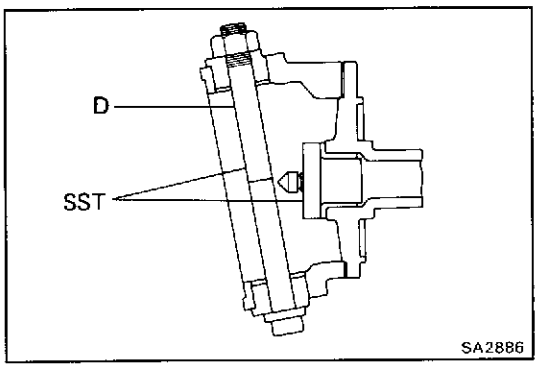

(d) Dismount SST from the housing, and mount it to the knuckle.

SST 09634-60013

HINT: Use care not to erase the scribed line when dismounting and remounting SST from the axle housing

Make sure the rod D is in the same vertical direction that it was when mounted on the axle housing.

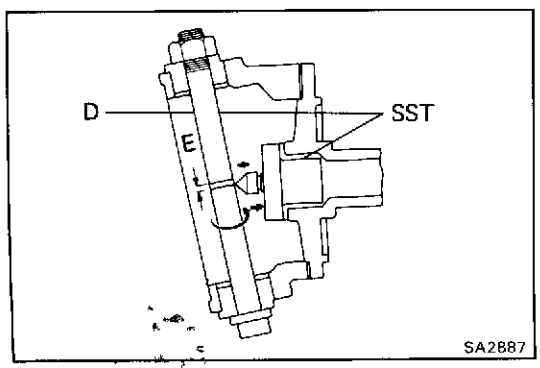

(e) Turn rod D and describe another line on it.
Measure distance E between the two scribed lines.
The thickness of the steering knuckle lower bearing shim F will be the distance E less 3 mm (0.12 in.).

LOWER SHIM THICKNESS (F)
F = D — 3 mm

Adjusting shim thickness

Thickness mm (in.)
0.1 (0 004)
0 2 (0 008)
0 3 (0 012)
0 5 (0 020)
1 0 (0.039)

The thickness of the steering knuckle upper bearing shim G will be the difference between the total adjusting shim thickness C and shim thickness F.

UPPER SHIM THICKNESS (G)
G = C — F

HINT: Compare E and F with the thickness of the shims removed at disassembly. If there is considerable difference, remeasure E and F

(f) Apply molybdenum disulphide lithium base grease to the axle shaft bushing

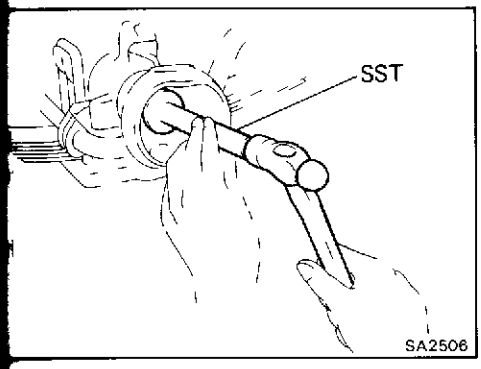

ASSEMBLY OF STEERING KNUCKLE AND AXLE SHAFT

(See page SA-38)

1. INSTALL OIL SEAL TO AXLE HOUSING

Using SST, drive in a new oil seal into the axle housing.

SST 09618-60010

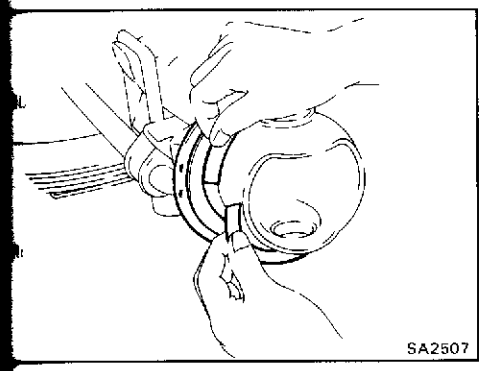

2. INSTALL FELT DUST SEAL, RUBBER SEAL, STEEL RING AND OIL SEAL RETAINER

Install the felt dust seal, rubber seal, steel ring and oil seal retainer to the axle housing.

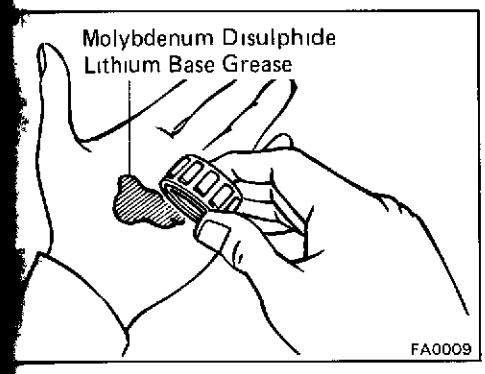

3. PACK BEARINGS WITH MOLYBDENUM DISULPHIDE LITHIUM BASE GREASE

(a) Place molybdenum disulphide lithium base grease in the palm of your hand.

(b) Pack grease into the bearing, continuing until grease oozes out from the other side.

(c) Do the same around the bearing circumference.

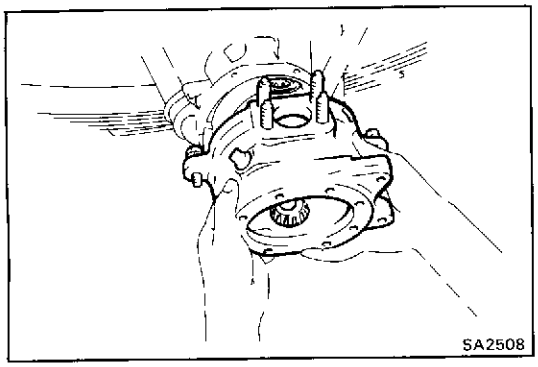
SA2508

4. INSTALL STEERING KNUCKLE AND BEARINGS

(a) Place the bearings in positions to the knuckle and axle housing.

(b) Insert the knuckle to the axle housing.

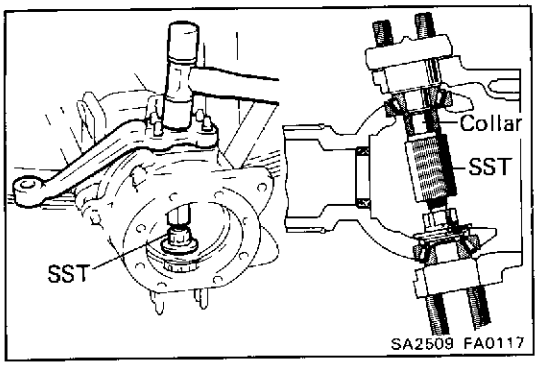

SA2509 FA0117

5. INSTALL KNUCKLE AND BEARING CAP

(a) Using SST, support the upper bearing inner race.

SST 09606-60020

HINT Use SST with collar

(b) Install the bearing cap or the third arm over the shims that were originally used or were selected as described in the adjustment operations.

(c) Using a hammer, drive the bearing cap or the third arm into the bearing inner race.

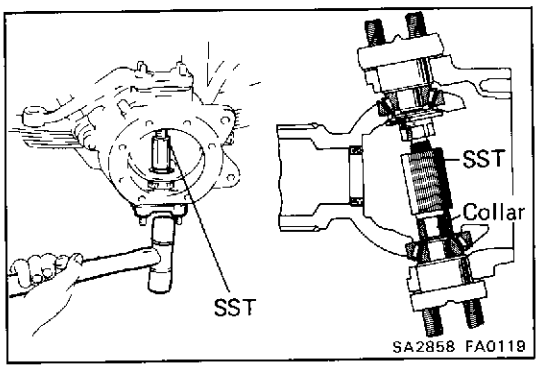

SA2858 FA0118

(d) Using SST, support the lower bearing inner race

SST 09606-60020

HINT: Use SST with collar.

(e) Install the bearing cap or the knuckle arm over the originally used or were selected in the adjustment operations.

(f) Using a hammer, drive the knuckle arm into the bearing inner race.

(g) Remove SST from the knuckle.

SST 09606-60020

(h) Install and torque the nuts.

(Knuckle Arm)
Install the cone washers, spring washers, nut and the four nuts and torque the nuts.

Torque: 980 kg-cm (71 ft-lb, 96 N·m)

(Third Arm)
Install the cone washers, spring washers, nut and four nuts and torque the nuts

Torque: 980 kg-cm (71 ft-lb, 96 N·m)

(Bearing Cap)
Install the spring washers and four nuts and torque the nuts.

Torque: 980 kg-cm (71 ft-lb, 96 N·m)

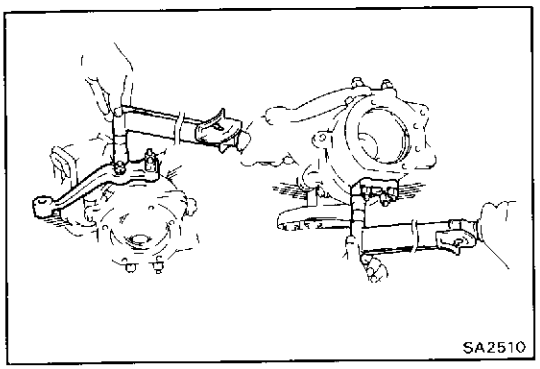
SA2510

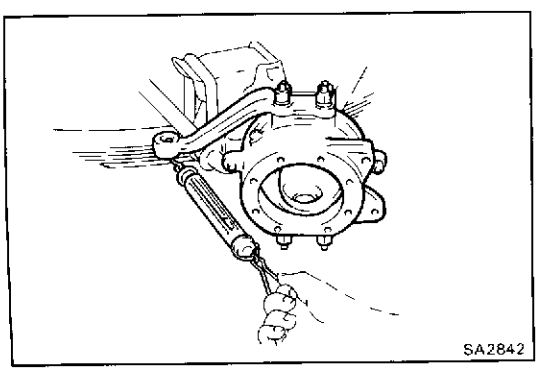
SA2842

6. MEASURE BEARINGS PRELOAD

Using a spring tension gauge, measure the preload.

Preload (starting): 3.0 — 6.0 kg (6.6 — 13.2 lb, 29 — 58 N)

w/ Leaf Spring Type)

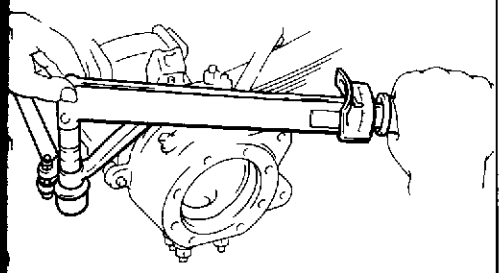

w/ Coil Spring Type)

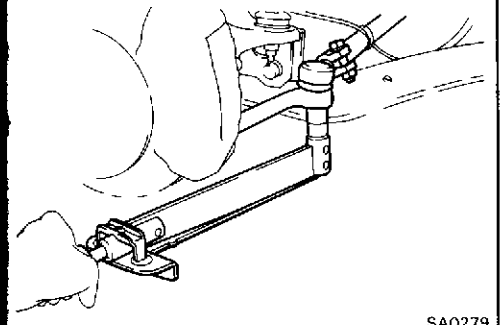

SA0279
SA2511

7. CONNECT TIE ROD TO KNUCKLE ARM

Torque the castle nut and secure it with a new cotter pin.

Torque: 925 kg-cm (67 ft-lb, 91 N·m)

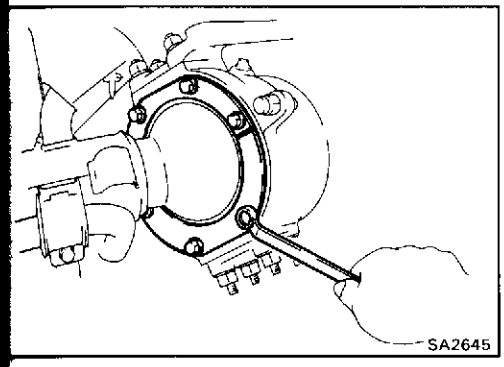

SA2645

8. INSTALL FELT DUST SEAL, RUBBER SEAL, STEEL RING AND OIL SEAL RETAINER

Install the felt dust seal, rubber seal, steel ring and oil seal retainer to steering knuckle with the six bolts.

Torque: 55 kg-cm (48 in.-lb, 5.4 N·m)

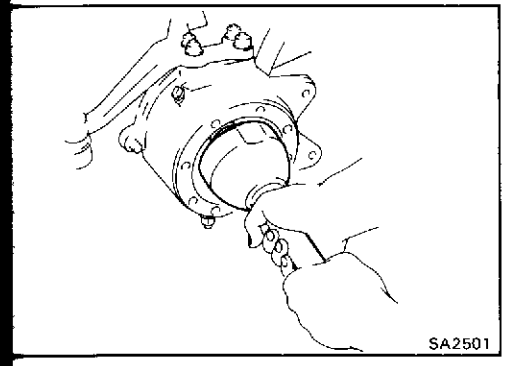

SA2501

9. INSTALL AXLE SHAFT

Position one flat part of the outer shaft upward, and install the shaft.

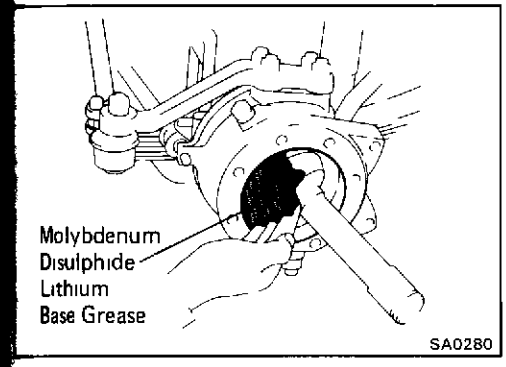

SA0280

10. PACK MOLYBDENUM DISULPHIDE LITHIUM BASE GREASE

Pack molybdenum disulphide lithium base grease into the knuckle to about three fourths of the knuckle.

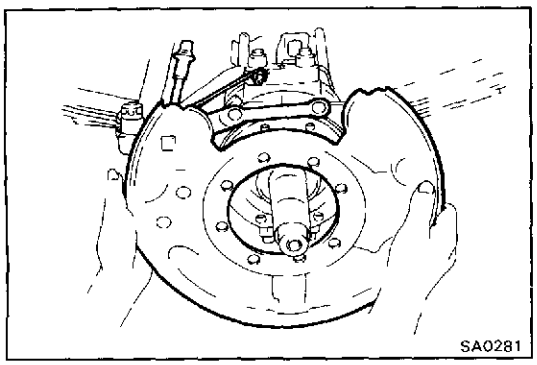
SA0281

11. INSTALL KNUCKLE SPINDLE, DUST COVER WITH NEW GASKETS AND DUST SEAL

(a) Place a new gasket in position on the knuckle and install the spindle.

NOTICE: (w/ Power Locking Hub)

- **Be careful not to get the wire harness and gum grommet between the spindle and the knuckle.**
- **Check that the vinyl tape come off the spindle.**

(b) Place the gasket, dust cover and dust seal on the spindle.

(c) Torque the spindle mounting bolts.

Torque: 475 kg-cm (34 ft-lb, 47 N·m)

(d) (w/ Power Locking Hub)
Connect the connector.

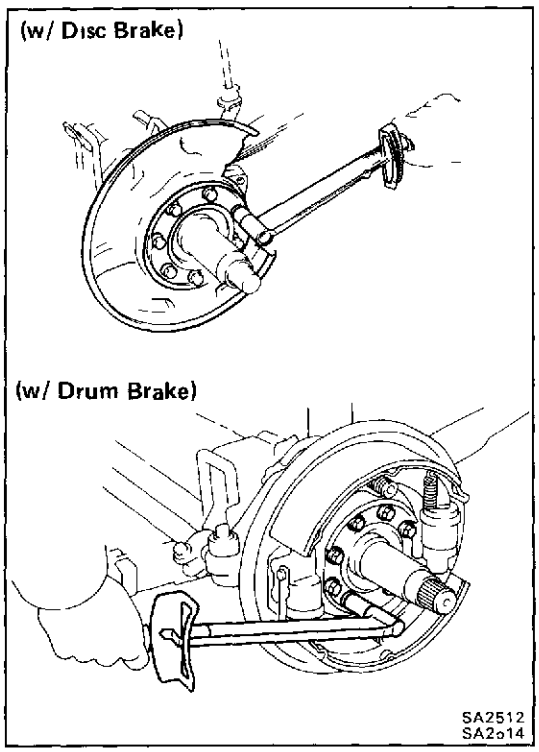

SA2512
SA2514

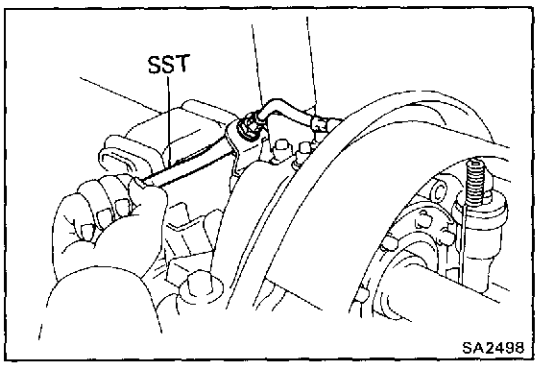

SA2498

12. CONNECT BRAKE HOSE

(a) Using SST, connect the brake tube.

SST 09751-36011

Torque: 155 kg-cm (11 ft-lb, 15 N·m)

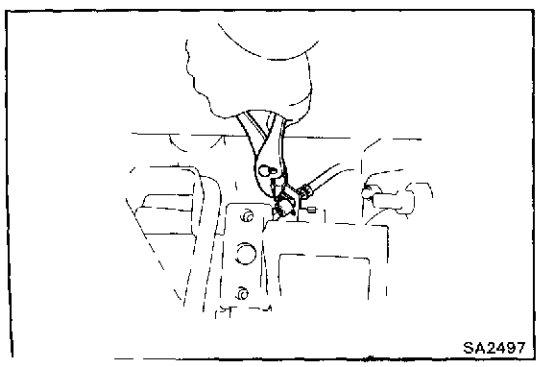
SA2497

(b) Using pliers, install the clip.

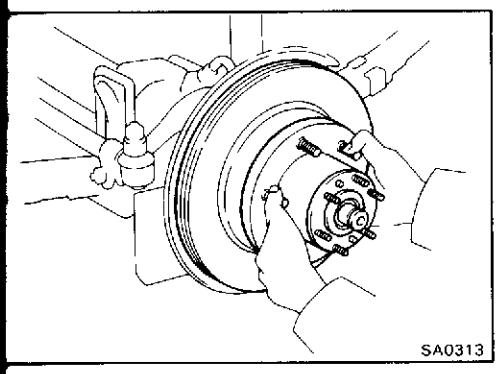

13. **INSTALL AXLE HUB (See page SA-34)**

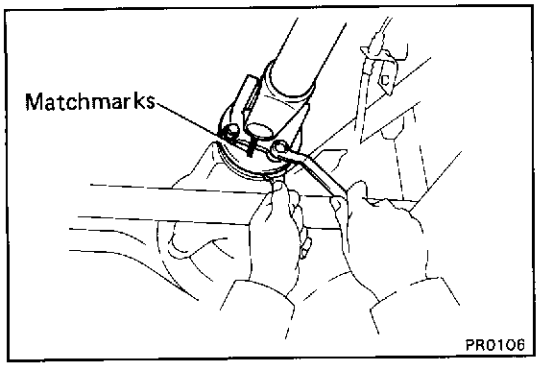

FRONT DIFFERENTIAL

On-Vehicle Replacement of Rear Oil Seal

1. DISCONNECT FRONT PROPELLER SHAFT

(a) Place matchmarks on the flanges

(b) Remove the four bolts and nuts.

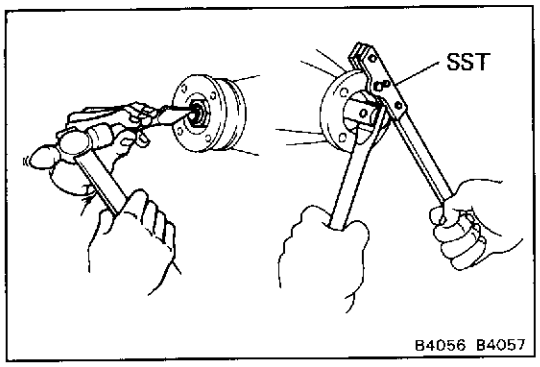

2. REMOVE COMPANION FLANGE

(a) Using a chisel and hammer, loosen the staked part of nut.

(b) Using SST to hold the flange, remove the nut and plate washer.

SST 09330-00021

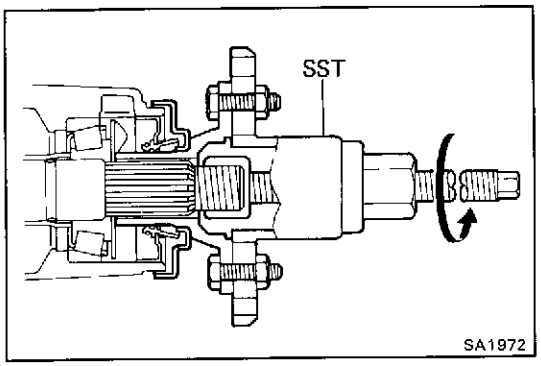

(c) Using SST, remove the companion flange.

SST 09557-22022 (09557-22050)

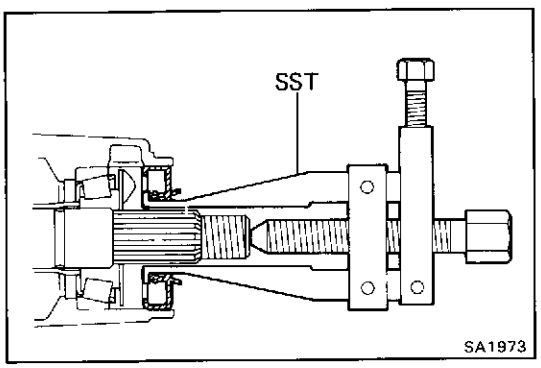

3. REMOVE OIL SEAL AND OIL SLINGER

(a) Using SST, remove the oil seal

SST 09308-10010

(b) Remove the oil slinger.

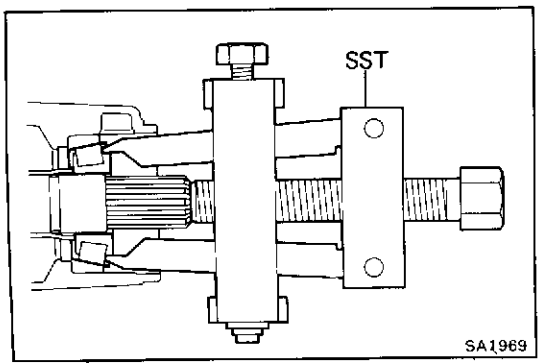

4. REMOVE REAR BEARING

Using SST, remove the rear bearing

SST 09556-22010

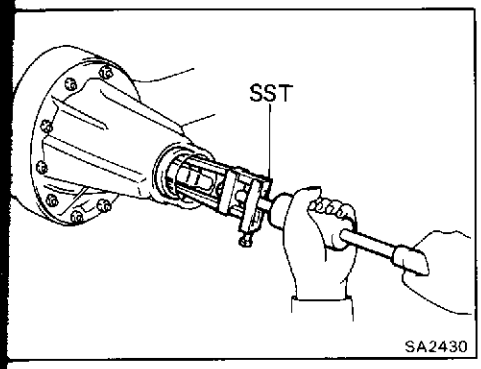

5. **(FJ, PZJ, HZJ)**
REMOVE BEARING OUTER RACE

Using SST, remove the bearing outer race

SST 09308-00010

NOTICE: Do not scratch the taper surface of the outer race.

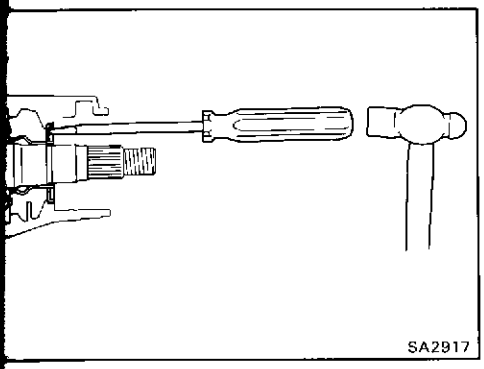

6. **(FJ, PZJ, HZJ)**
REMOVE OIL STORAGE RING

Using a screwdriver, bend the oil storage ring and drive it out.

7. **REMOVE BEARING SPACER**

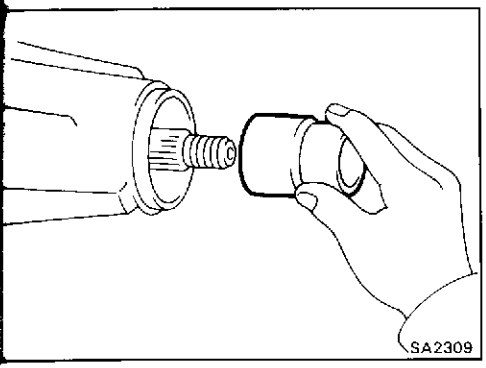

8. **INSTALL NEW BEARING SPACER**

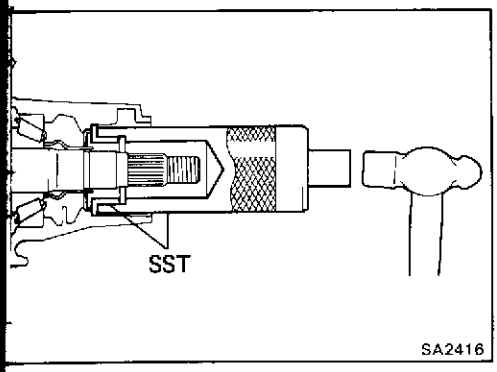

9. **(FJ, PZJ, HZJ)**
INSTALL NEW OIL STORAGE RING

Using SST, drive in a new oil storage ring.

SST 09316-60010 (09316-00010, 09316-00020)

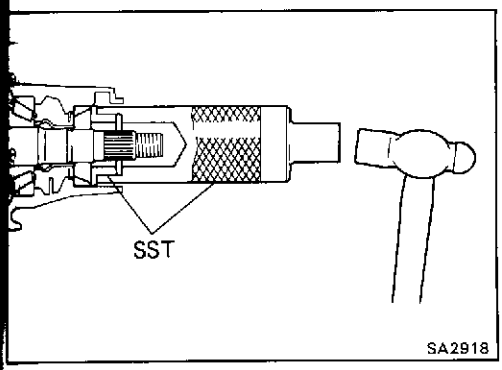

10. **(FJ, PZJ, HZJ)**
INSTALL BEARING OUTER RACE

Using SST, drive in the bearing outer race.

SST 09316-60010 (09316-00010, 09316-00020)

11. **INSTALL REAR BEARING**

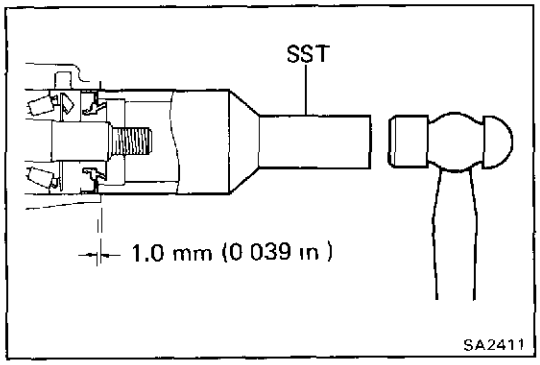

12. INSTALL OIL SLINGER AND NEW OIL SEAL

(a) Install the oil slinger facing as shown.

(b) Using SST, drive in a new oil seal as shown.

SST 09554-30011 (RJ, LJ)
09214-76011 (FJ, PZJ, HZJ)

Oil seal drive in depth: 1.0 mm (0.039 in.)

(c) Coat the lip of the oil seal with MP grease

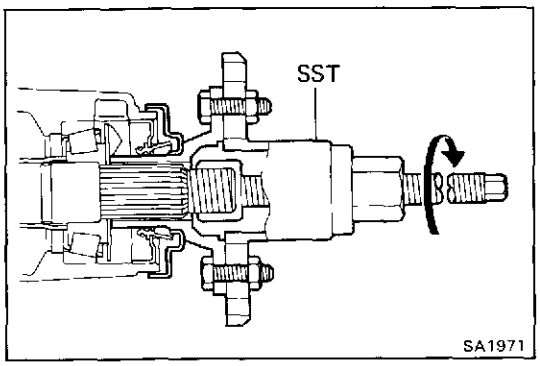

13. INSTALL COMPANION FLANGE

(a) Using SST, install the companion flange on the drive pinion.

SST 09557-22022 (09557-22050)

(b) Place the plate washer on the companion flange

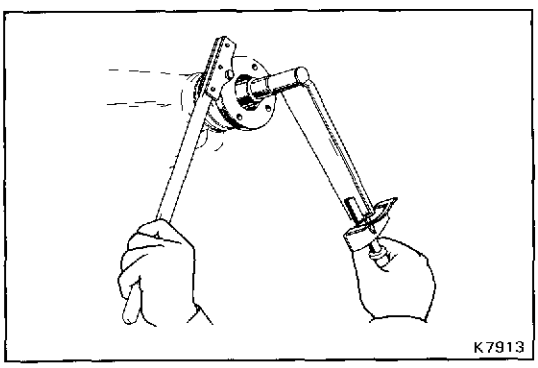

(c) Apply a light coat of gear oil on the threads of a new companion flange nut

(d) Using SST to hold the flange, torque the nut

SST 09330-00021

Torque: 2,000 kg-cm (145 ft-lb, 196 N·m)

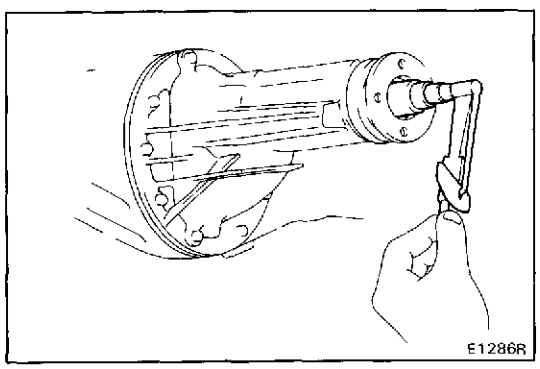

14. CHECK DRIVE PINION PRELOAD

Using a torque meter, measure the preload of the bac lash between the drive pinion and ring gear

Preload (at starting):

Models	New bearing	Reused bearing
RJ, LJ	19 — 26 kg-cm (16.5 — 22.6 in.-lb, 1.9 — 2.5 N·m)	9 — 13 kg-cm (7.8 — 11.3 in.-lb, 0.9 — 1.3 N·m)
FJ, PZJ, HZJ	10 — 16 kg-cm (8.7 — 13.9 in.-lb, 0.9 — 1.6 N·m)	5 — 8 kg-cm (4.3 — 6.9 in.-lb, 0.5 — 0.8 N·m)

- If the preload is greater than specification, replace bearing spacer.
- If the preload is less than specification, retighten nut 130 kg-cm (9 ft-lb, 13 N·m) a little at a time the specified preload is reached.

If the maximum torque is exceeded while retightening the nut, replace the bearing spacer and repeat the preload procedure. Do not back off the pinion nut to reduce the preload

Maximum torque: 3,500 kg-cm (253 ft-lb, 343 N·m)

If everything is normal, coat the threads with gear oil, then repeat the above operation

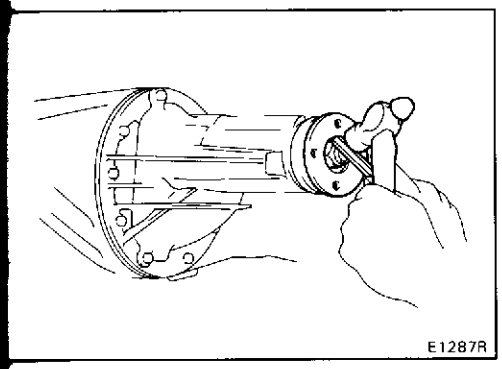

15. STAKE DRIVE PINION NUT

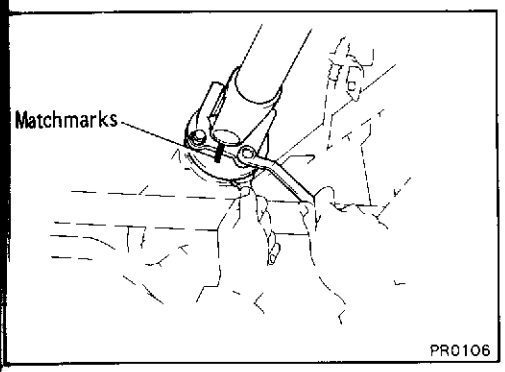

16. CONNECT FRONT PROPELLER SHAFT

(a) Align the matchmarks on the flanges and connect the flanges with four bolts, spring washers and nuts.

(b) Torque the bolts and nuts

Torque: 750 kg-cm (54 ft-lb, 74 N·m)

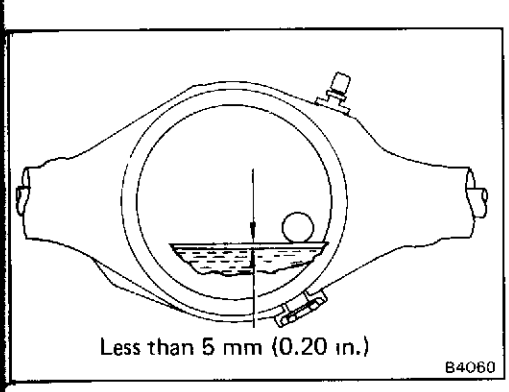

17. CHECK DIFFERENTIAL OIL LEVEL

Fill with hypoid gear oil if necessary.

Oil type: Hypoid gear oil API GL-5

Recommended oil viscosity:

Above −18°C (0°F) SAE 90
Below −18°C (0°F) SAE 80W or 80W-90

Capacity:

RJ, LJ
1.9 liters (2.1 US qts, 1.7 Imp.qts)

FJ, PZJ, HZJ
2.6 liters (2.7 US qts, 2.3 Imp.qts)

Removal and Installation of Front Differential

COMPONENTS

RJ, LJ

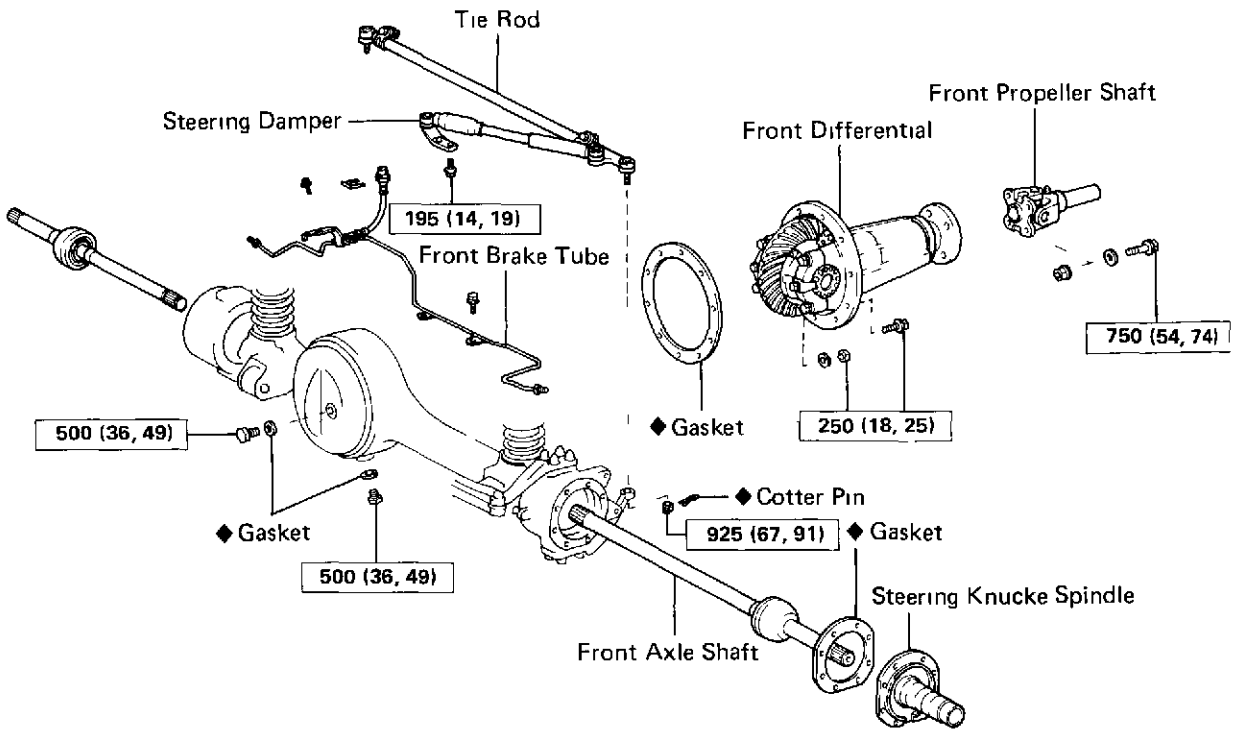

FJ, PZJ, HZJ

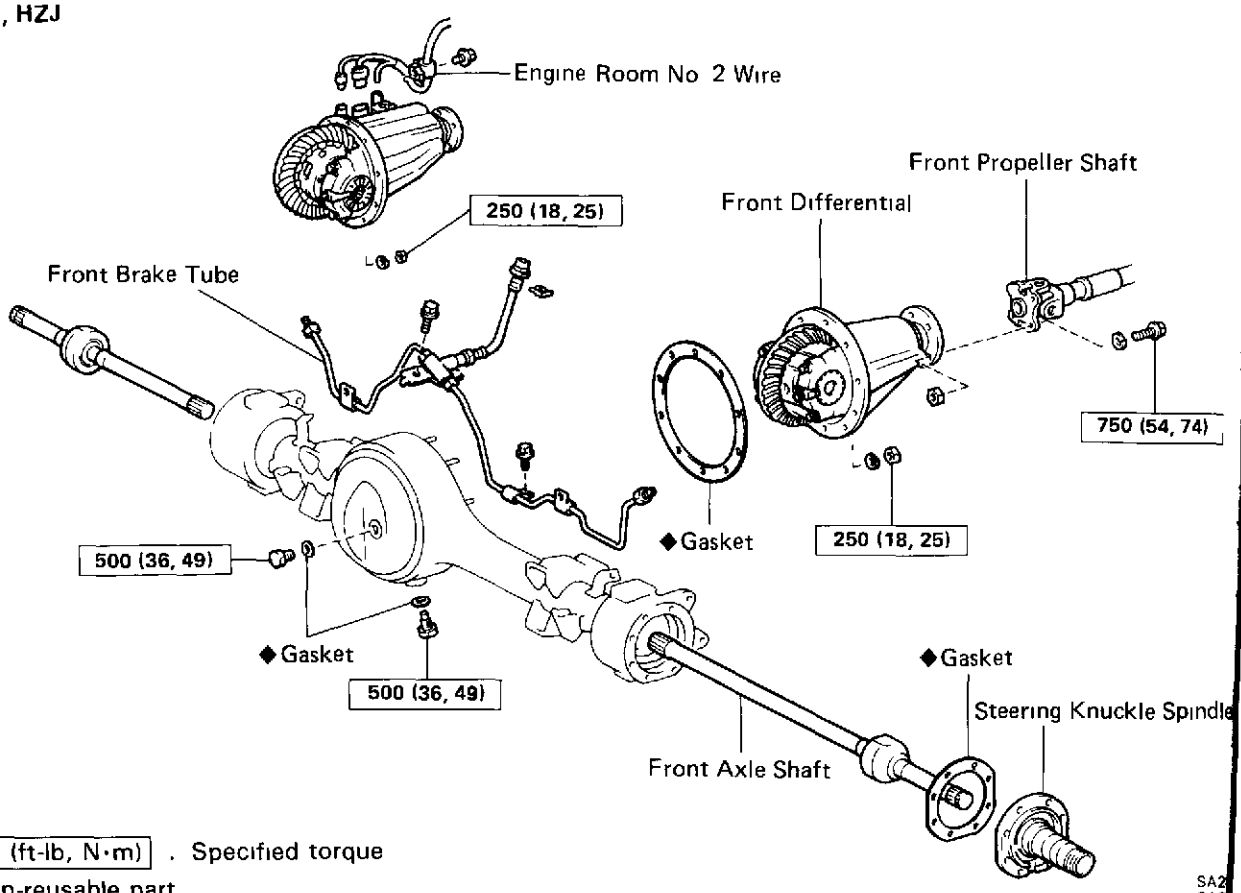

kg-cm (ft-lb, N·m) : Specified torque

◆ Non-reusable part

SA2
SA2

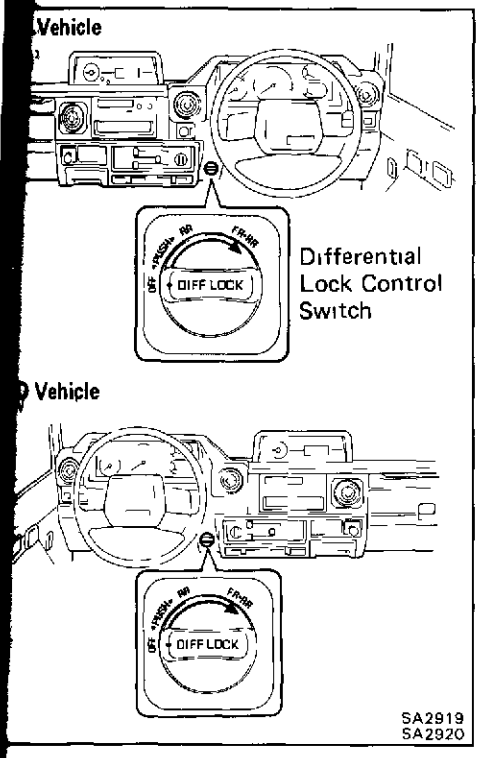

REMOVAL OF FRONT DIFFERENTIAL

(See page SA-56)

1. **(w/ DIFFERENTIAL LOCK)**
   SHIFTING FRONT DIFFERENTIAL LOCK
   (a) Turn the ignition switch to ON position.
   (b) Put on the 4WD switch.
   (c) Turn the differential lock control switch to FR·RR position, and lock the front differential.

   HINT: Turning round the tires, check the tires, check they are the differential lock condition.

   (d) Disconnect the cable from the negative terminal of the battery.

2. **REMOVE DRAIN PLUG AND DRAIN DIFFERENTIAL OIL**

3. **REMOVE FRONT AXLE SHAFTS**
   (See steps 1 to 6 on pages SA-39, 40)

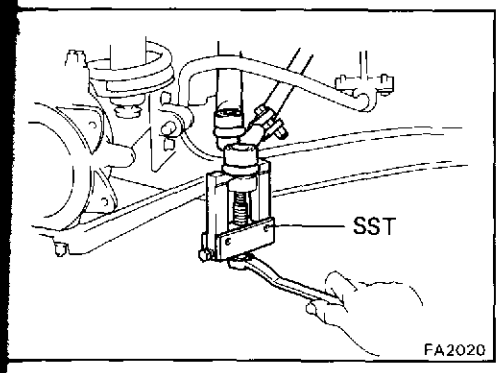

4. **(RJ, LJ)**
   REMOVE TIE ROD AND STEERING DAMPER
   (a) Using SST, disconnect the tie rod from the knucle arm

   SST 09611-22012

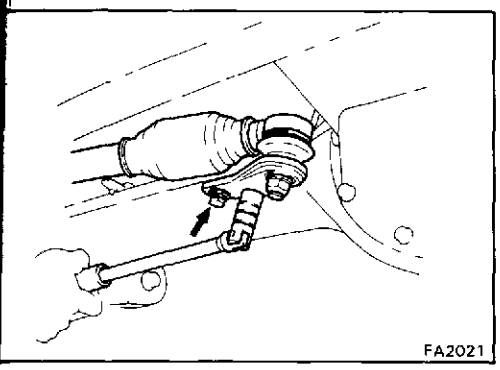

   (b) Remove the two bolts and steering damper.

5. **DISCONNECT FRONT PROPELLER SHAFT**
   (See step 1 on page SA-52)

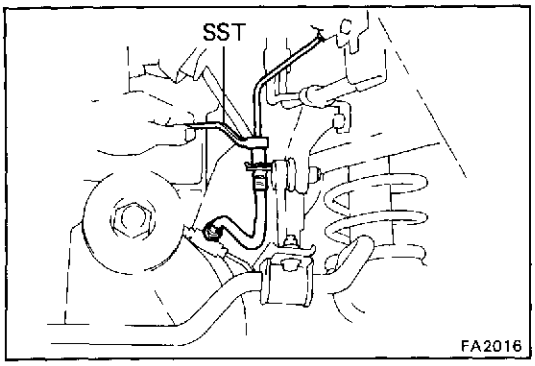

6. REMOVE FRONT BRAKE TUBE

(a) Using SST, disconnect the brake tube at the frame side and remove the clip.

SST 09751-36011

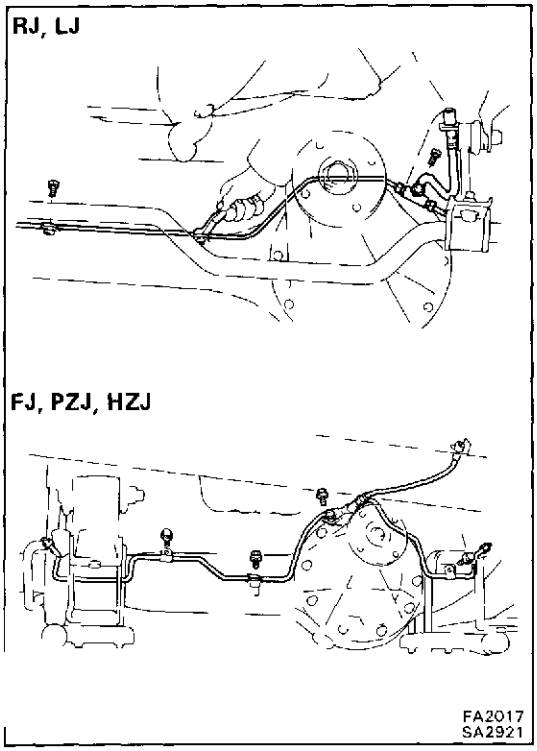

(b) Remove the clamp bolts, and remove the three-way with the brake hose and tube.

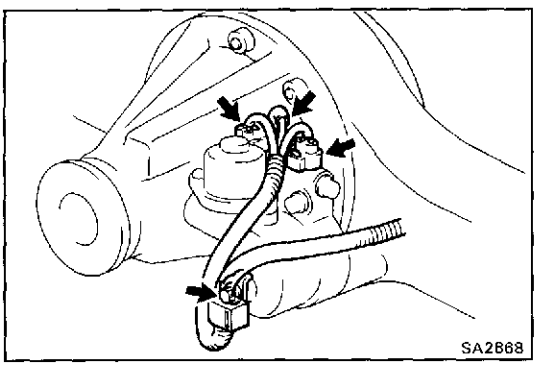

7. (w/ DIFFERENTIAL LOCK) DISCONNECT ENGINE ROOM NO.2 WIRE

8. REMOVE DIFFERENTIAL CARRIER ASSEMBLY

NOTICE: Do not scratch the installation surface.

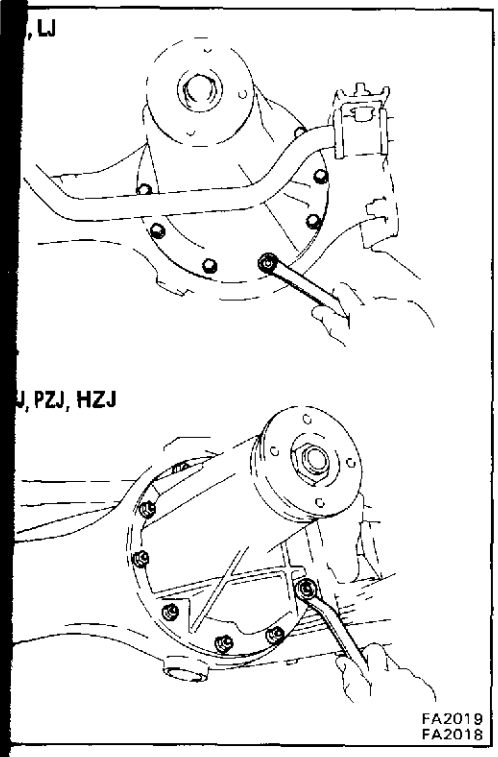

INSTALLATION OF FRONT DIFFERENTIAL

(See page SA-56)

1. **(w/ DIFFERENTIAL LOCK)**
   CHECK DIFFENTIAL LOCK OPERATION
   (a) Connect the connector of the actuator to the connector of the vehicle side, and check that the sleeve is on work with switching over the differential lock control switch
   (b) After checking the differential, keep it in a lock state.

2. **INSTALL A NEW GASKET**

3. **INSTALL DIFFERENTIAL CARRIER ASSEMBLY**
   Install the differential carrier assembly in the axle and install the two nuts and eight bolts (RJ, LJ) or two nuts and ten nuts (FJ, PZJ, HZJ). Torque the nuts and bolts
   Torque: 280 kg-cm (20 ft-lb, 27 N·m)

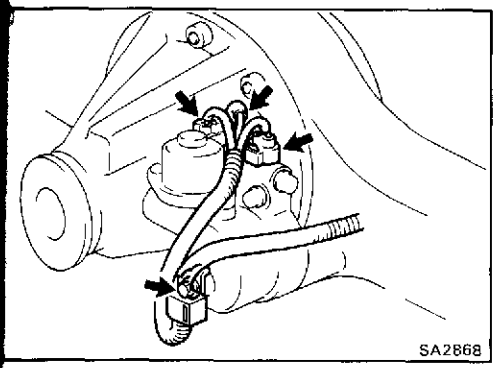

4. **(w/ DIFFERENTIAL LOCK)**
   CONNECT ENGINE ROOM NO.2 WIRE
   HINT:
   - When connecting the bleeder tube of the harness side to the hose of the actuator side, its depth of insertion is approx. 15 mm (0.59 in.).
   - Take care that water or the equivalant shall not adhere to the connectors and hose.

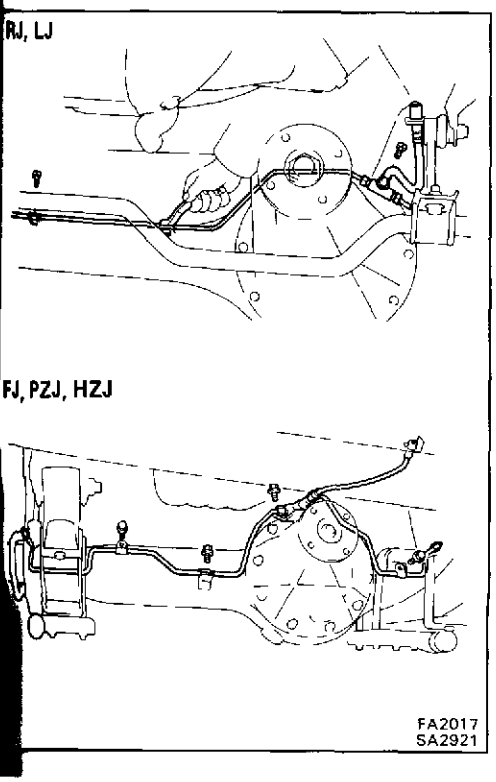

5. **INSTALL FRONT BRAKE TUBE**
   (a) Install the three-way with the brake hose and tubes to the axle housing.

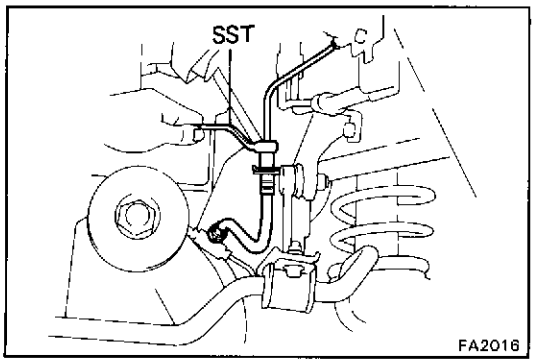

(b) Using SST, connect the brake tube at the frame side, and install the clip.

SST 09751-36011

6. **CONNECT FRONT PROPELLER SHAFT**
(See step 16 on page SA-55)

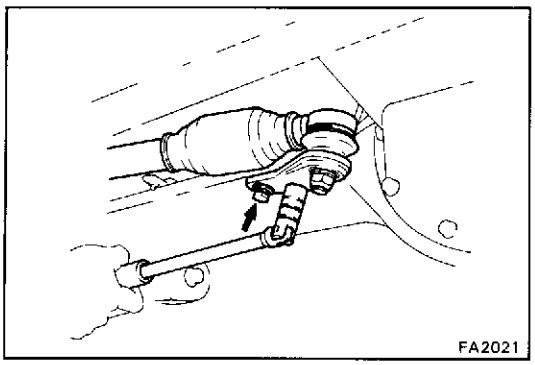

7. **(RJ, LJ)**
INSTALL TIE ROD AND STEERING DAMPER

(a) Install the steering damper with the two bolts.

Torque: 195 kg-cm (14 ft-lb, 19 N·m)

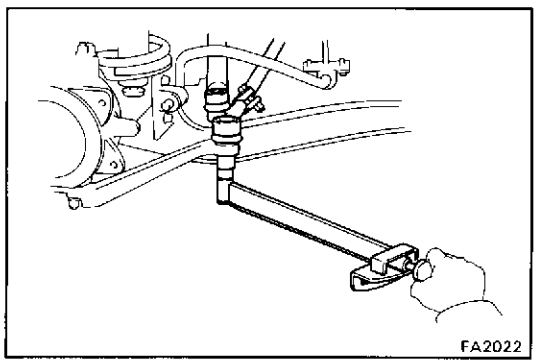

(b) Torque the castle nut and secure it with a new cotter pin.

Torque: 925 kg-cm (67 ft-lb, 91 N·m)

8. **INSTALL FRONT AXLE SHAFTS**
(See steps 1 to 13 on pages SA-47 to 51)

9. **INSTALL DRAIN PLUG**

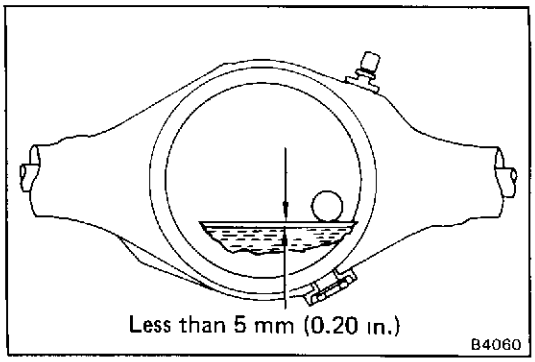

10. **FILL DIFFERENTIAL WITH GEAR OIL**

Fill with hypoid gear oil.

Oil type: Hypoid gear oil API GL-5

Recommended oil viscosity:

Above −18°C (0°F) SAE 90
Below −18°C (0°F) SAE 80W or 80W-90

Capacity:

RJ, LJ
1.9 liters (2.1 US qts, 1.7 Imp.qts)

FJ, PZJ, HZJ
2.6 liters (2.7 US qts, 2.3 Imp.qts)

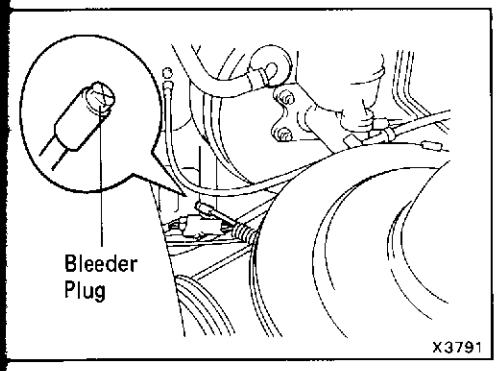

11. (w/ DIFFERENTIAL LOCK)
CHECK DIFFERENTIAL LOCK OPERATION
(See page SA-184)

12. (w/ DIFFERENTIAL LOCK)
CHECK BLEEDER PLUG

Check that the bleeder plug at the tip of the bleeder tube (inside of the engine room) is not damaged of worn.

Differential Carrier

COMPONENTS

2 Pinion Type

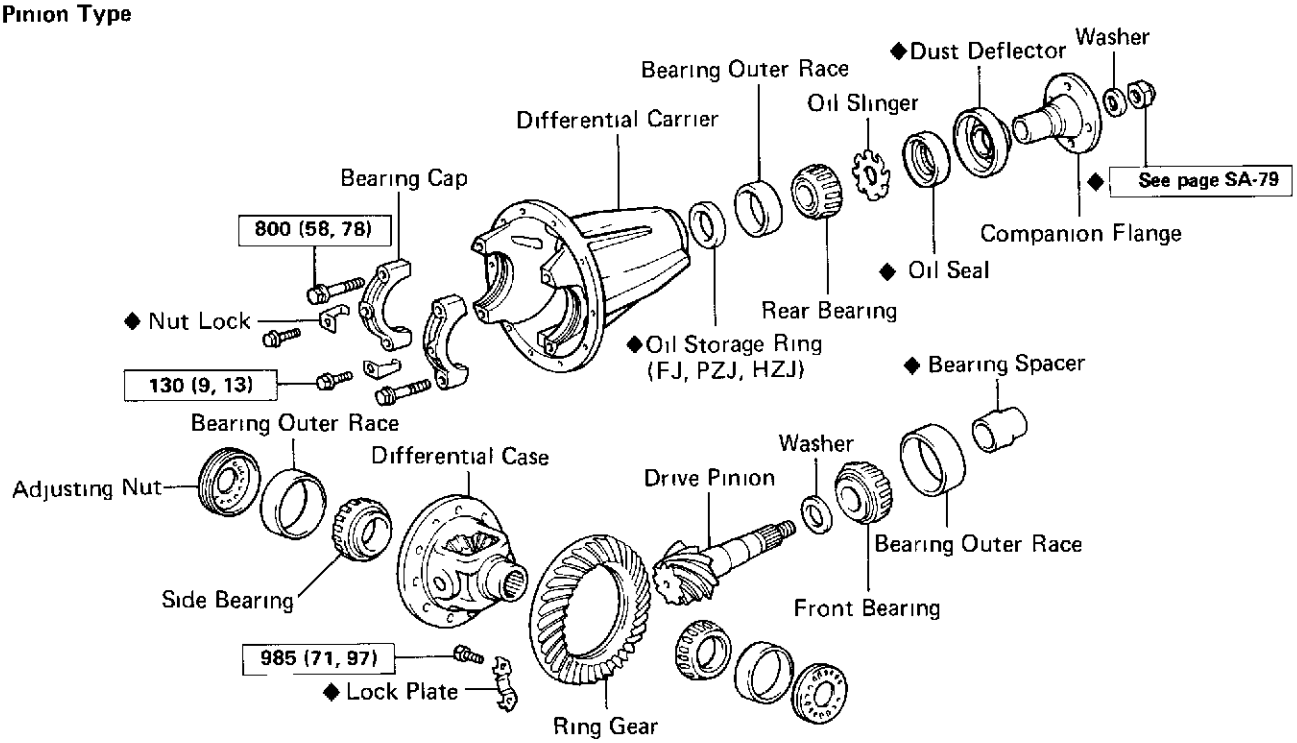

w/ Differential Lock (4 Pinion Type)

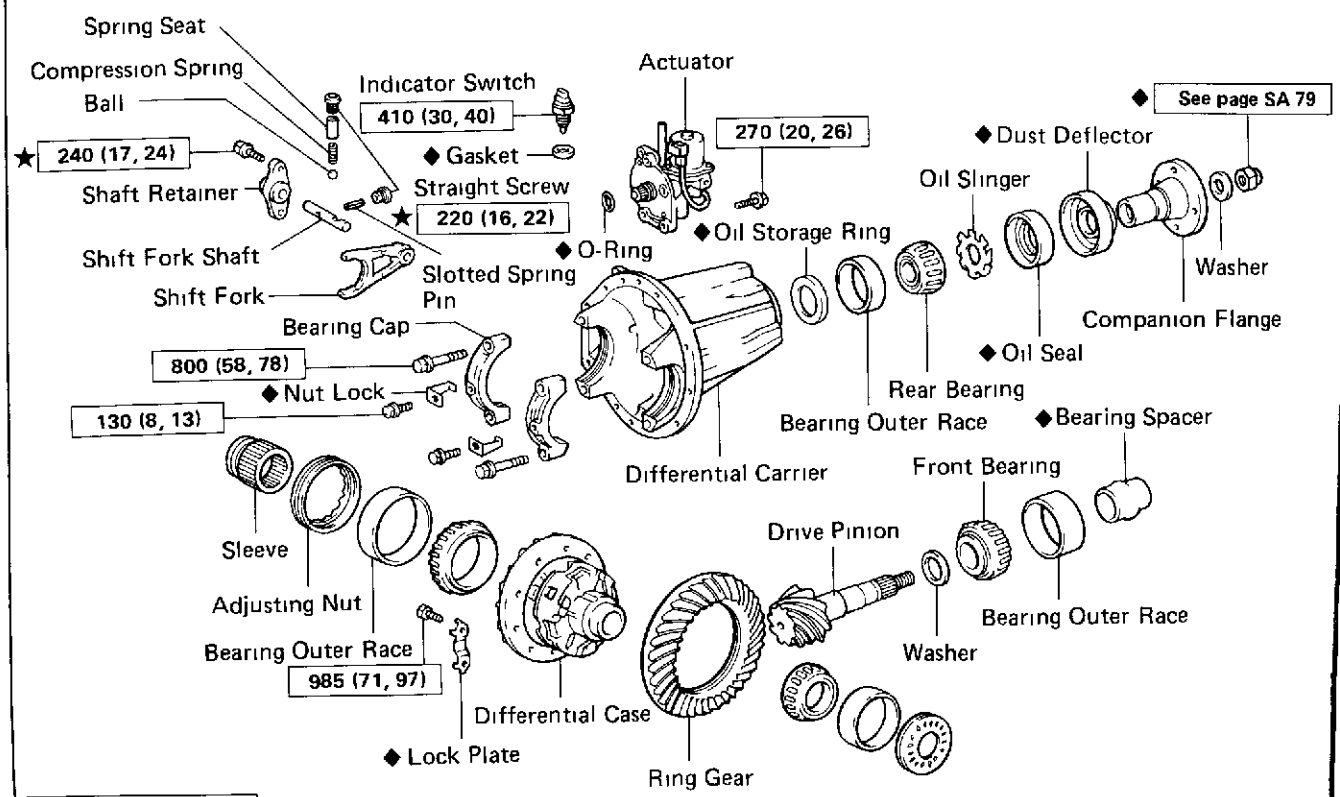

kg-cm (ft-lb, N·m) Specified torque

◆ Non-reusable part

★ Precoated part

SA
SA

INSPECTION OF DIFFERENTIAL CARRIER

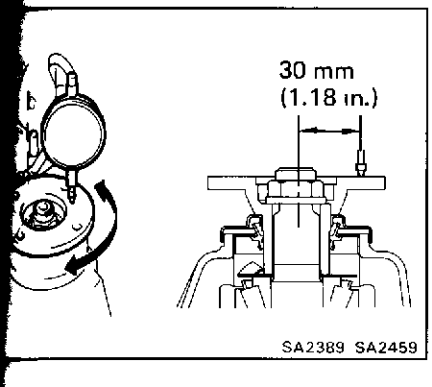

1. CHECK RUNOUT OF COMPANION FLANGE

Using a dial indicator, measure the vertical and lateral runout of the companion flange.

Maximum vertical runout: 0.10 mm (0.0039 in.)

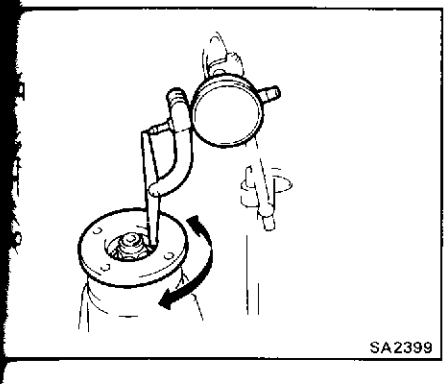

Maximum lateral runout: 0.10 mm (0.0039 in.)

If the runout is greater than the maximum, replace the companion flange.

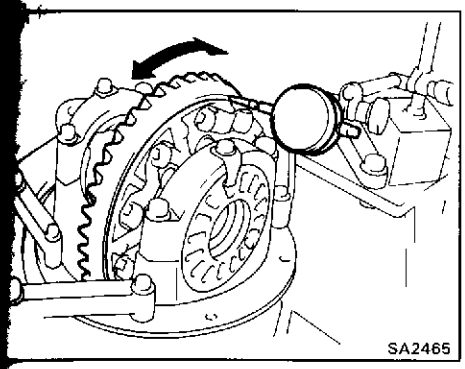

2. CHECK RING GEAR RUNOUT

If the runout is greater than maximum, replace the ring gear.

Maximum runout: 0.10 mm (0.0039 in.)

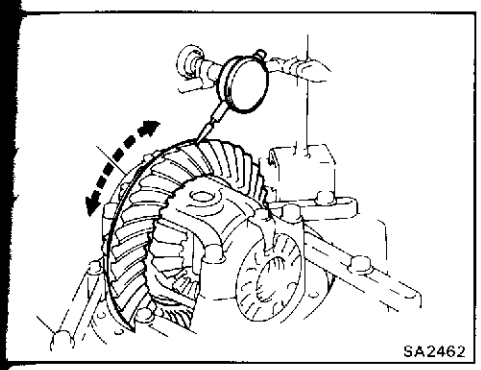

3. CHECK RING GEAR BACKLASH

If the backlash is not within specification, adjust the side bearing preload or repair as necessary.

Backlash: 0.13 — 0.18 mm (0.0051 — 0.0071 in.)

HINT: Perform the measurements at three or more positions around the circumference of the ring gear.

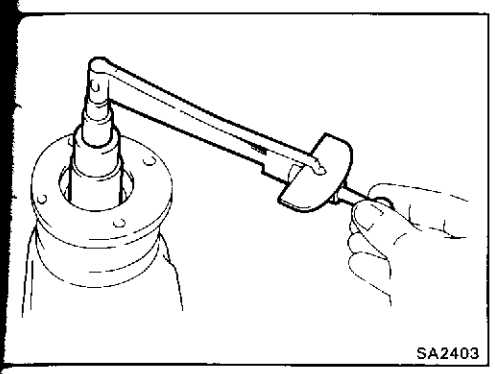

4. MEASURE DRIVE PINION PRELOAD

Measure the drive pinion preload, using the backlash of the drive pinion and ring gear.

Preload (at starting):

RJ, LJ

9 — 13 kg-cm (7.8 — 11.3 in.-lb, 0.9 — 1.3 N·m)

FJ, PZJ, HZJ

5 — 8 kg-cm (4.3 — 6.9 in.-lb, 0.5 — 0.8 N·m)

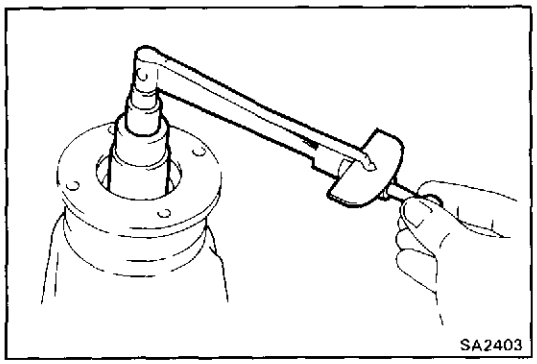

5. **CHECK TOTAL PRELOAD**

Using a torque meter, measure the total preload.

Total preload: In addition to drive pinion preload
4 — 6 kg-cm (3.5 — 5.2 in.-lb, 0.4 — 0.6 N·m)

If necessary, disassemble and inspect a differential.

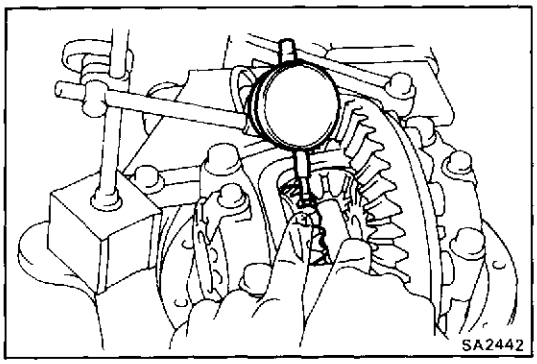

6. **(2 PINION TYPE)**
CHECK SIDE GEAR BACKLASH

Measure the side gear backlash while holding one pinion gear toward the case.

Standard backlash: 0.05 — 0.20 mm
(0.0020 — 0.0079 in.)

If the backlash is out of specification, install the correct thrust washers. (See page SA-85)

7. **INSPECT TEETH CONTACT BETWEEN RING GEAR AND DRIVE PINION**
(See step 11 on page SA-77)

DISASSEMBLY OF DIFFERENTIAL CARRIER

(See page SA-62)

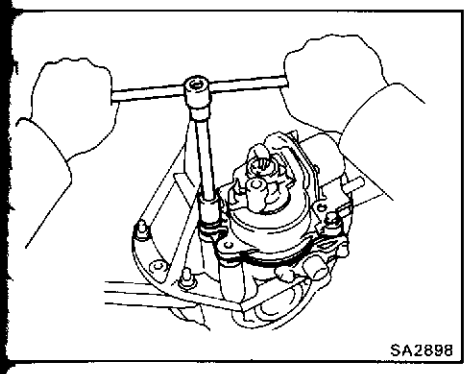
SA2898

1. **(w/ DIFFERENTIAL LOCK)**
   REMOVE ACTUATOR
   (a) Remove the bolt and actuator from the differential carrier.
   (b) Remove the O-ring.

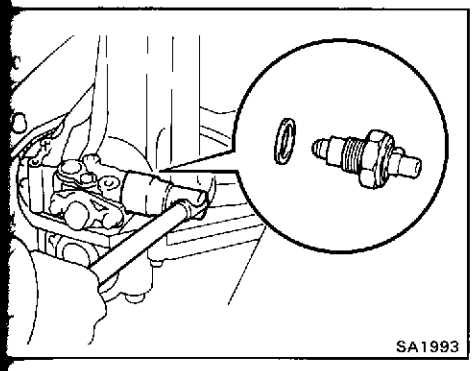
SA1993

2. **(w/ DIFFERENTIAL LOCK)**
   REMOVE INDICATOR SWITCH

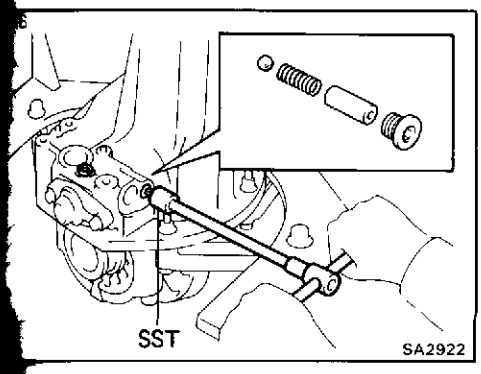

SA2922

3. **(w/ DIFFERENTIAL LOCK)**
   REMOVE SHIFT FORK SHAFT
   (a) Using SST, remove the two straight screw plugs.

   SST 09313-30021

   (b) Remove the spring seat, compression spring and ball.

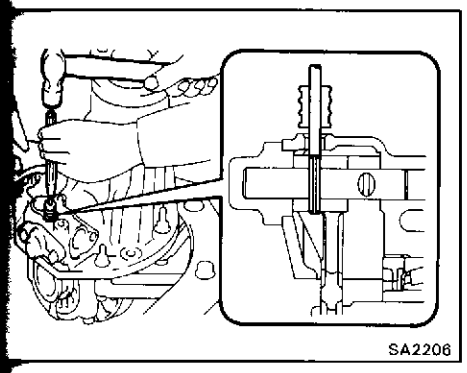
SA2206

   (c) Using a pin punch and hammer, drive out the slotted spring pin.

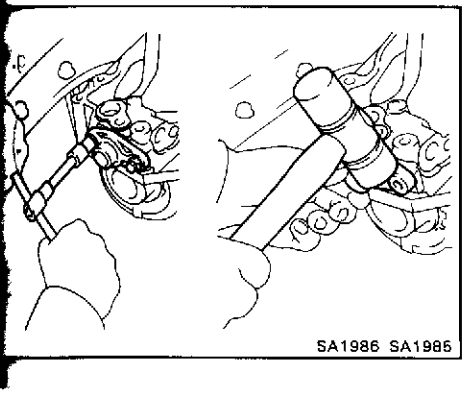
SA1986 SA1985

   (d) Remove the two bolts from the shaft retainer.
   (e) Using a plastic hammer, tap out the shaft retainer.

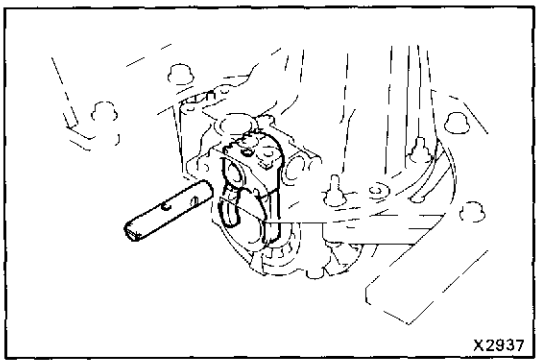

(e) Remove the shift fork shaft.

HINT: Pull out the shift fork shaft with the screwdriver turned round.

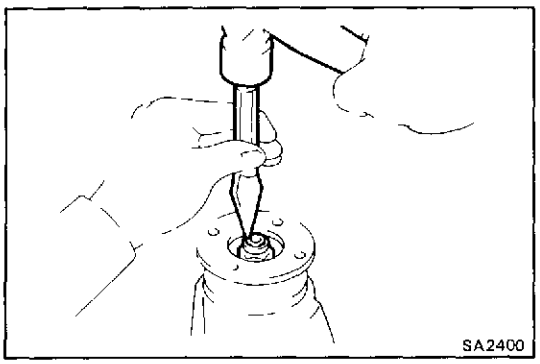

4. REMOVE COMPANION FLANGE

(a) Using a hammer and chisel, loosen the staked part of the nut.

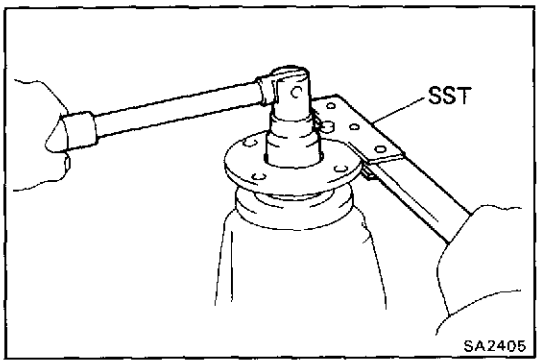

(b) Using SST to hold the flange, remove the nut and plate washer.

SST 09330-00021

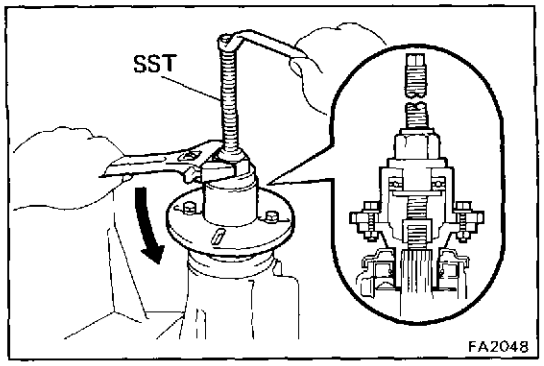

(c) Using SST, remove the companion flange.

SST 09557-22022 (09557-22050)

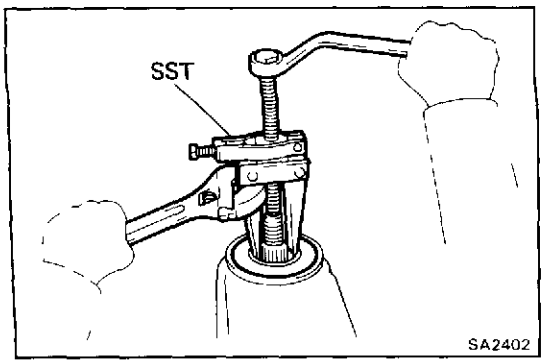

5. REMOVE REAR OIL SEAL AND OIL SLINGER

(a) Using SST, remove the oil seal from the housing.

SST 09308-10010

(b) Remove the oil slinger.

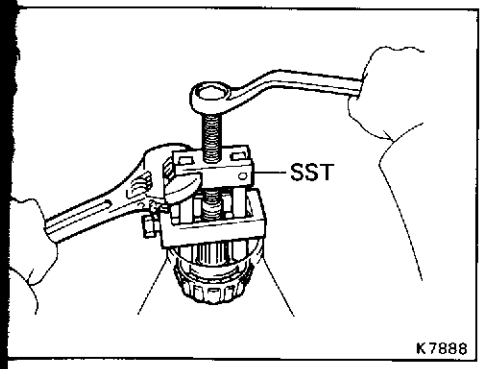

6.-1 (RJ, LJ)
REMOVE REAR BEARING AND BEARING SPACER

(a) Using SST, remove the bearing from the housing.

SST 09556-22010

(b) Remove the bearing spacer

6.-2 (FJ, PZJ, HZJ)
REMOVE REAR BEARING

Using SST, remove the bearing from the housing.

SST 09556-22010

7. REMOVE DIFFERENTIAL CASE

(a) (2 pinion type only)
Place matchmarks on the bearing cap and differential carrier.

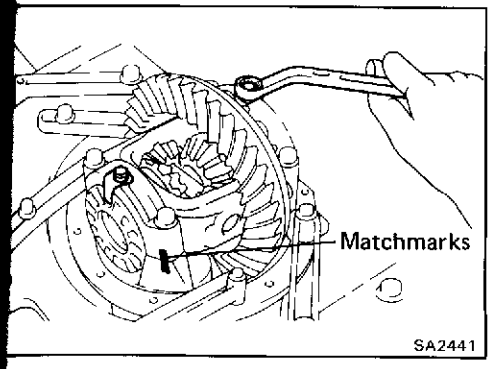

(b) Remove the two adjusting nut locks.

(c) Remove the four bolts and the two bearing caps.

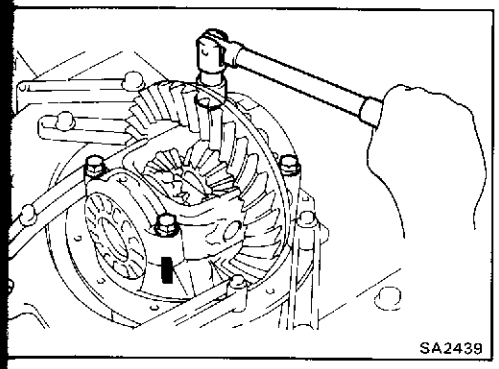

(d) (2 pinion type only)
Remove the two adjusting nuts.

(e) (2 pinion type only)
Remove the differential case with the side bearing outer races from the differential carrier

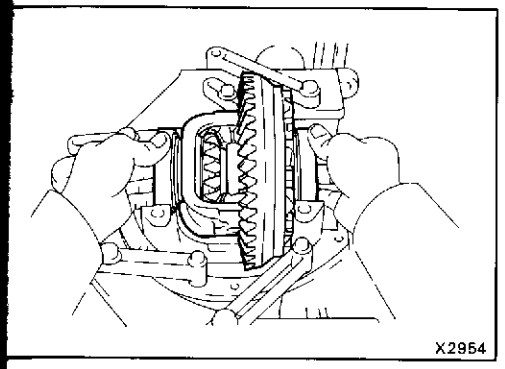

HINT: Tag the disassembled parts to show the location for reassembly.

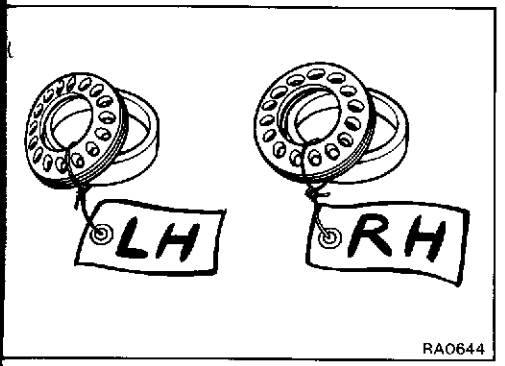

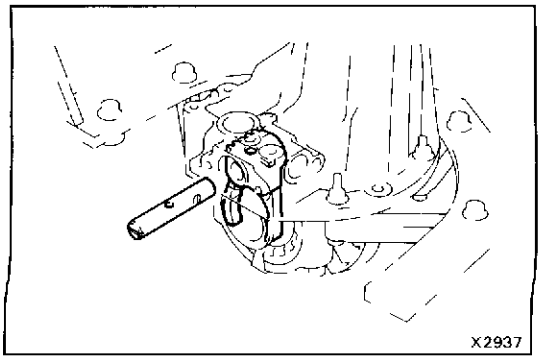

(e) Remove the shift fork shaft.

HINT: Pull out the shift fork shaft with the screwdriver turned round.

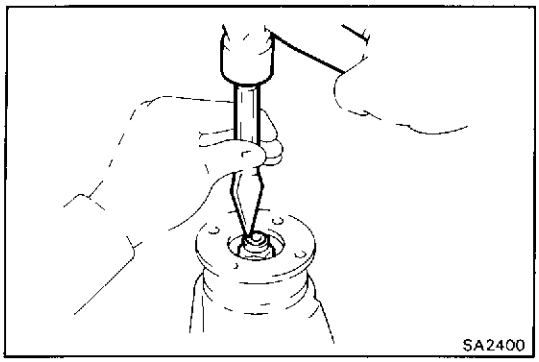

4. REMOVE COMPANION FLANGE

(a) Using a hammer and chisel, loosen the staked part of the nut.

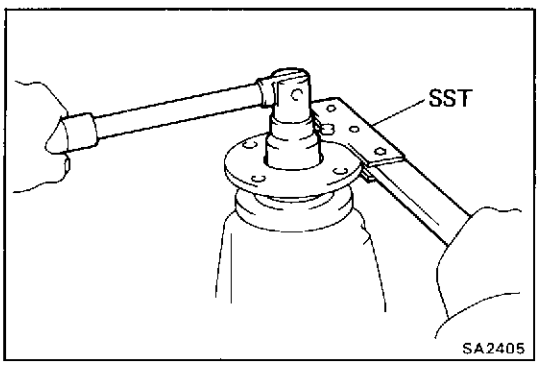

(b) Using SST to hold the flange, remove the nut and plate washer.

SST 09330-00021

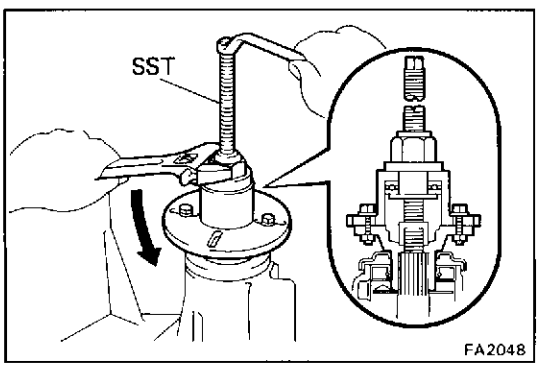

(c) Using SST, remove the companion flange.

SST 09557-22022 (09557-22050)

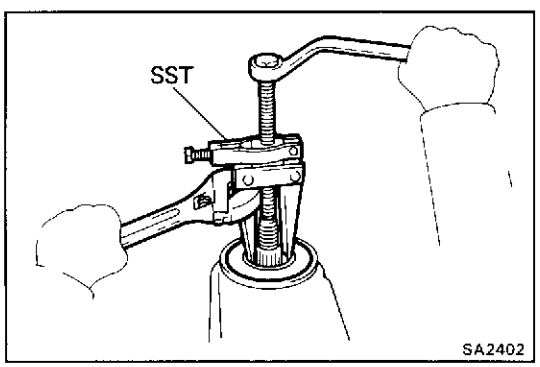

5. REMOVE REAR OIL SEAL AND OIL SLINGER

(a) Using SST, remove the oil seal from the housing.

SST 09308-10010

(b) Remove the oil slinger.

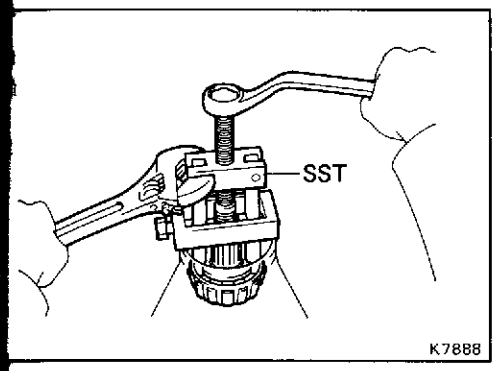

6.-1 (RJ, LJ)
REMOVE REAR BEARING AND BEARING SPACER

(a) Using SST, remove the bearing from the housing.

SST 09556-22010

(b) Remove the bearing spacer.

6.-2 (FJ, PZJ, HZJ)
REMOVE REAR BEARING

Using SST, remove the bearing from the housing.

SST 09556-22010

7. REMOVE DIFFERENTIAL CASE

(a) (2 pinion type only)
Place matchmarks on the bearing cap and differential carrier

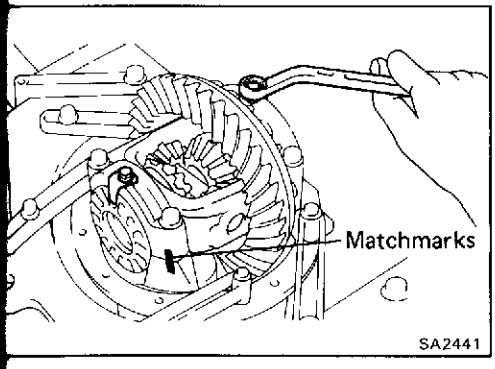

(b) Remove the two adjusting nut locks.

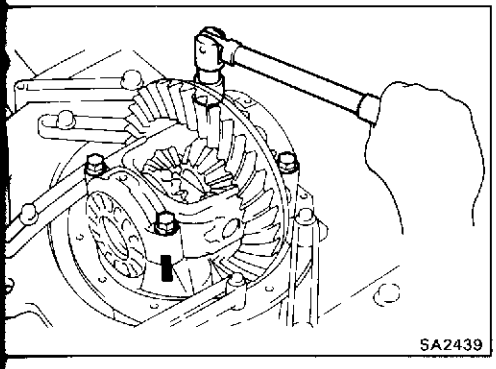

(c) Remove the four bolts and the two bearing caps.

(d) (2 pinion type only)
Remove the two adjusting nuts.

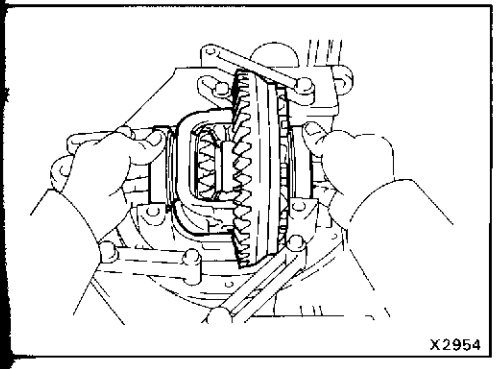

(e) (2 pinion type only)
Remove the differential case with the side bearing outer races from the differential carrier

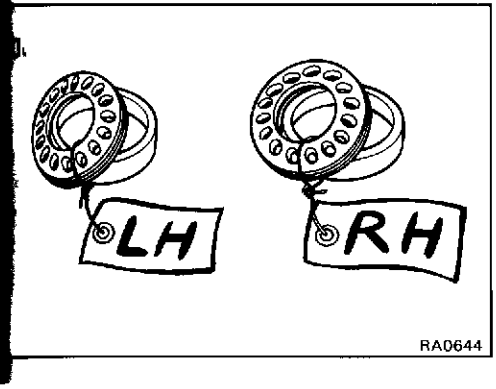

HINT: Tag the disassembled parts to show the location for reassembly.

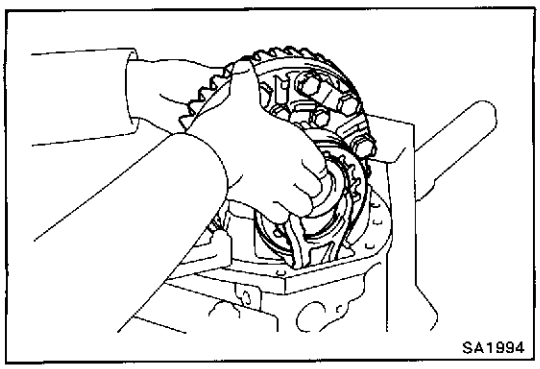
SA1994

(f) (w/ Differential lock only)
Remove the differential case with both side bearing outer races, adjusting nuts and sleeve from the differential carrier.

(g) (w/ Differential lock only)
Remove the shift fork

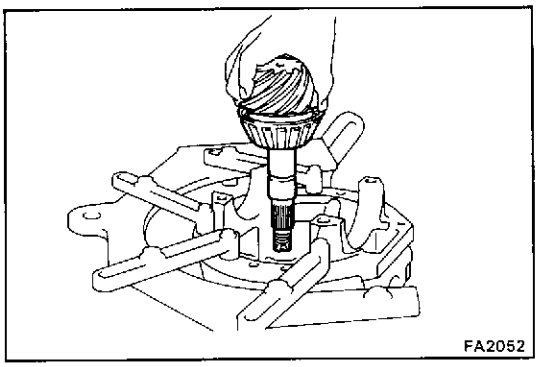
FA2052

8.-1 (RJ, LJ)
REMOVE DRIVE PINION

Remove the drive pinion with the front bearing.

8.-2 (FJ, PZJ, HZJ)
REMOVE DRIVE PINION AND BEARING SPACER

(a) Remove the drive pinion with the front bearing.

(b) Remove the bearing spacer.

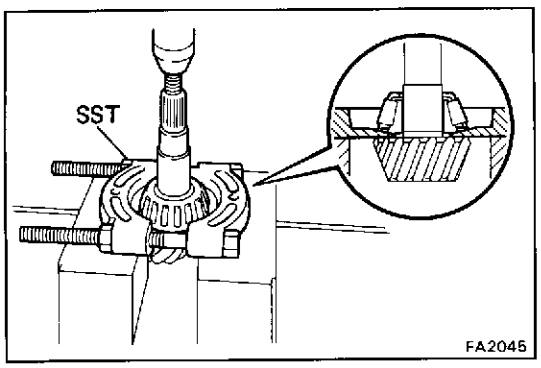

FA2045

9. REMOVE DRIVE PINION FRONT BEARING

(a) Using SST and a press, remove the bearing from drive pinion.

SST 09950-00020

HINT: If the drive pinion or ring gear are damaged place them as a set

(b) Remove the washer from the drive pinion.

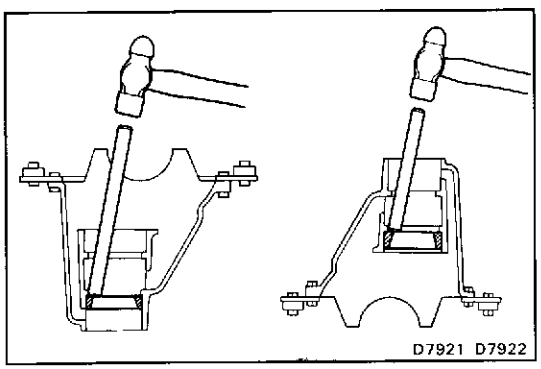
D7921 D7922

10.-1 (RJ, LJ)
REMOVE FRONT AND REAR BEARING OUTER RACE

Using a hammer and brass bar, drive out the outer from carrier.

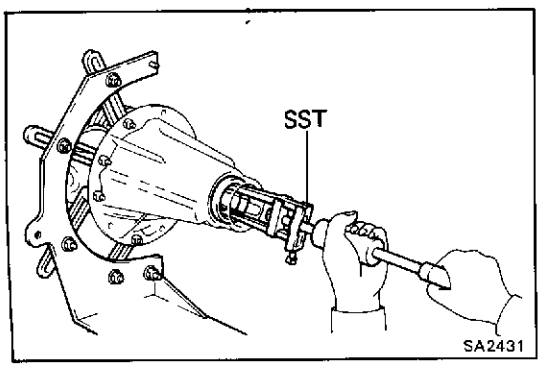

SA2431

10.-2 (FJ, PZJ, HZJ)
REMOVE FRONT, REAR BEARING OUTER RACES OIL STORAGE RING

(a) Using SST, remove the bearing outer race.

SST 09308-00010

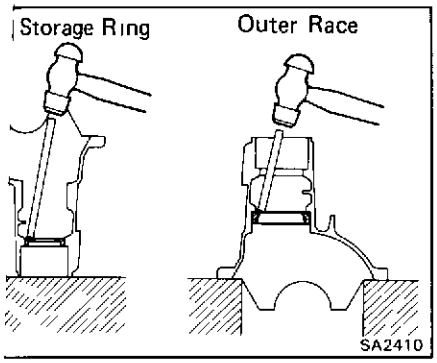

(b) Using a hammer and brass bar, drive out the oil storage ring and outer race from the carrier.

HINT: Do not remove the oil storage ring unless replacing it with a new one.

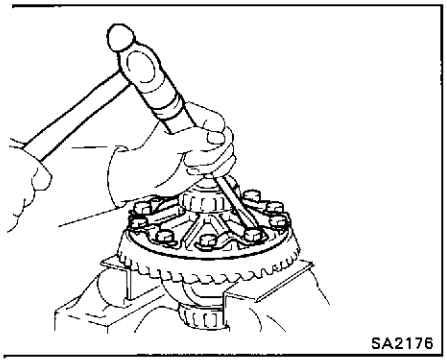

11. REMOVE RING GEAR

(a) Using a screwdriver, unstake the lock plates.

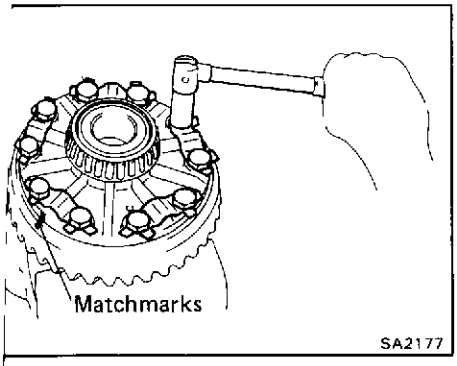

(b) Place matchmarks on the ring gear and differential case.

(c) Remove the ten bolts and five lock plates.

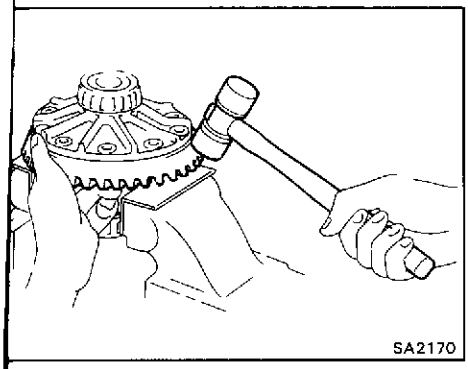

(d) Using a plastic or copper hammer, tap on the ring gear to separate it from the differential case.

12. CHECK DIFFERENTIAL CASE RUNOUT

(a) Place the bearing outer races on their respective bearings Check that the left and right outer races are not interchanged.

(b) Install the differential case in the differential carrier

(c) When there is no play left in the side bearings, install the adjusting nuts.

(d) Align matchmarks on the bearing cap and differential carrier.

(e) Install and uniformly tighten the four bearing cap bolts in several passes

(f) Using a dial indicator, measure the differential case runout

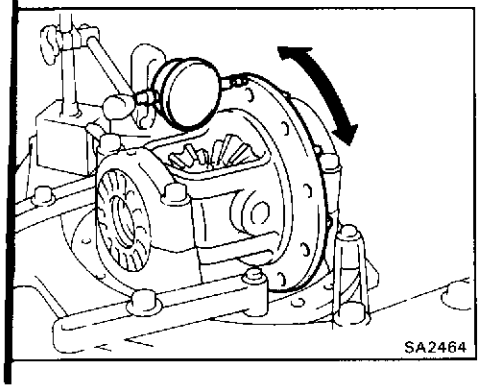

Maximum runout: 0.07 mm (0.0028 in.)

(g) Remove the differential case.
(See step 7 on page SA-67)

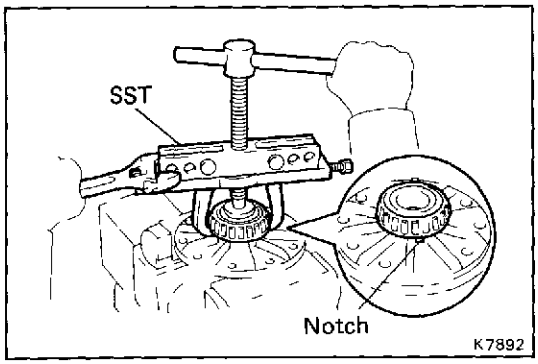

13. REMOVE SIDE BEARINGS

Using SST, remove the side bearing from the differential case.

SST 09950-20017

HINT: Fix the claws of SST to the notch in the differential case.

14. DISASSEMBLE DIFFERENTIAL CASE

2 pinion type: See page SA-84.
w/ Differential lock (4 pinion type)
: See page SA-86.

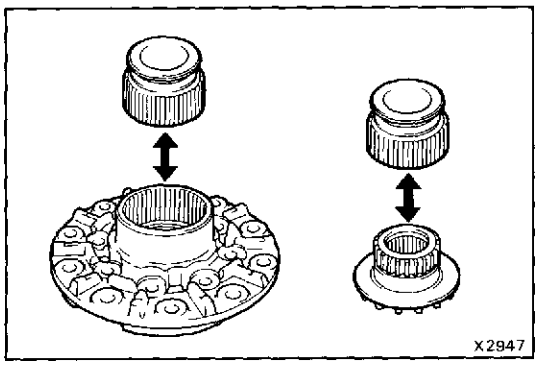

INSPECTION AND REPLACEMENT OF DIFFERENTIAL COMPONENTS

1. (w/ DIFFERENTIAL LOCK) INSPECT SLEEVE

(a) Install the sleeve to the differential case (LH) and check it moves smoothly.

(b) Install the sleeve to the side gear and check it moves smoothly.

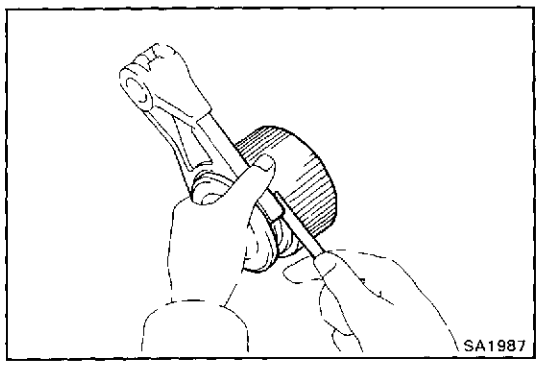

2. (w/ DIFFERENTIAL LOCK) MEASURE CLEARANCE OF SHIFT FORK AND SLEEVE

Using a feeler gauge, measure the clearance between the shift fork and sleeve

(For reference) Clearance: 0.15 — 0.35 mm (0.006 — 0.014 in.)

If necessary, replace the shift fork or sleeve.

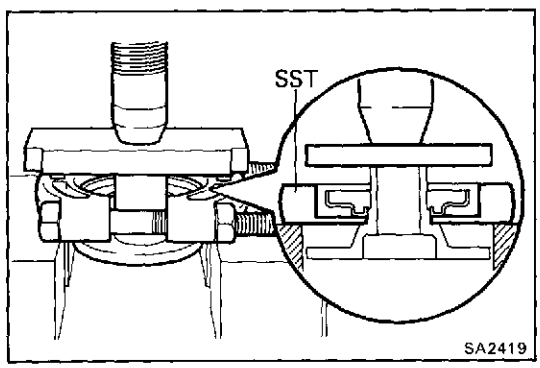

3. REPLACE COMPANION FLANGE DUST DEFLECTOR

(a) Using SST and a press, remove the dust deflector.

SST 09550-00020

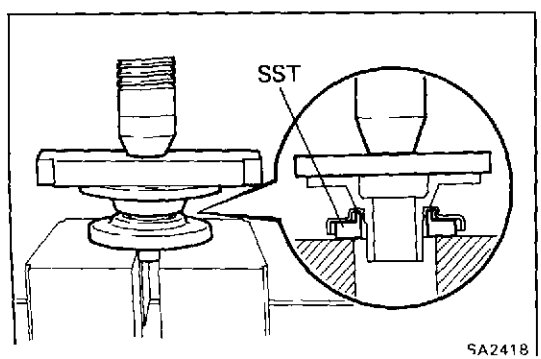

(b) Using SST and a press, install a new dust deflector.

SST 09726-40010

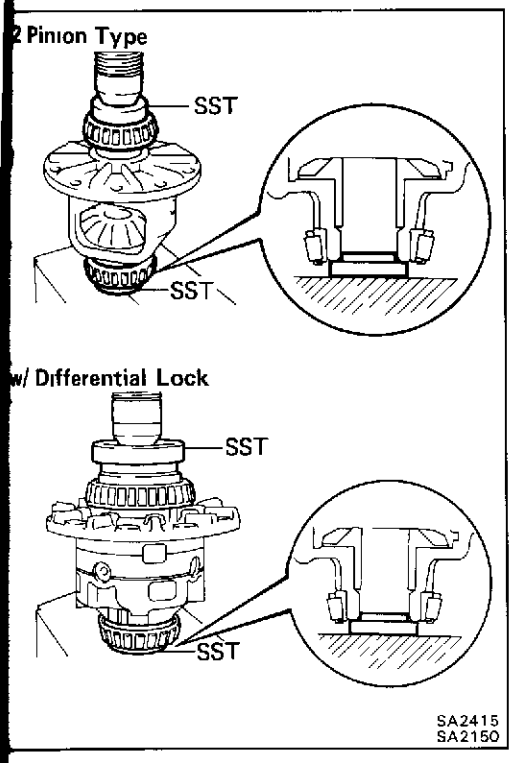

ASSEMBLY OF DIFFERENTIAL CARRIER

(See page SA-62)

1. INSTALL SIDE BEARINGS

Using SST and a press, install the two side bearings on the differential case.

SST

2 pinion type
09608-30012 (09608-00060, 09608-04060)
w/ Differential lock (4 pinion type)
09223-15020 and 09608-30012 (09608-04060)

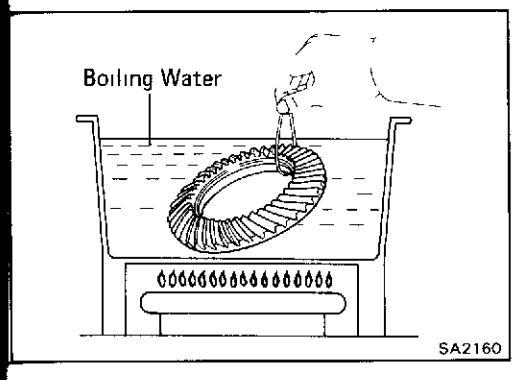

2. INSTALL RING GEAR ON DIFFERENTIAL CASE

(a) Clean the contact surfaces of the differential case and ring gear.

(b) Heat the ring gear in boiling water.

(c) After the moisture on the ring gear has completely evaporated, quickly install the ring gear to the differential case.

HINT: Align matchmarks on the ring gear and the differential case.

(d) Temporarily install five new lock plates and the ten bolts so that the bolt holes in the ring gear and differential case are not misaligned.

NOTICE: The ring gear set bolts should not be tightened until the ring gear has cooled sufficiently.

(e) After the ring gear has cooled sufficiently, torque the ring gear set bolts.

Torque: 985 kg-cm (71 ft-lb, 97 N·m)

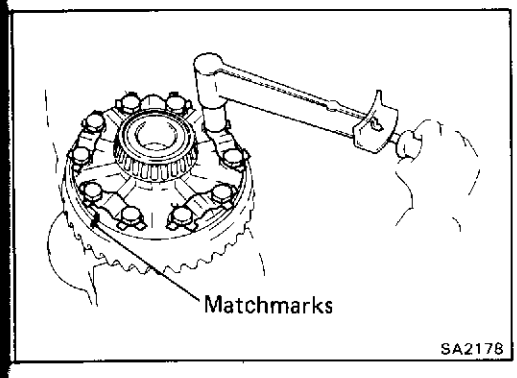

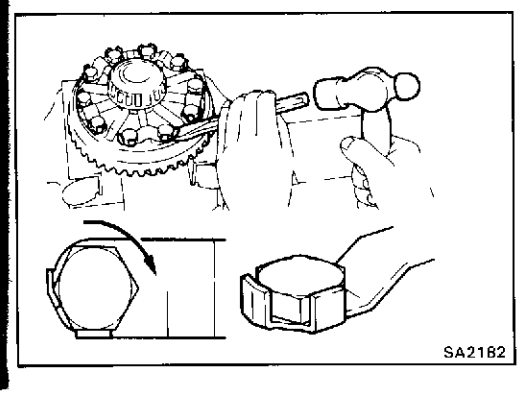

(f) Using a hammer and drift punch, stake the lock plates

HINT Stake one claw flush with the flat surface of the nut For the claw contacting the protruding portion of the nut, stake the half on the tightening side.

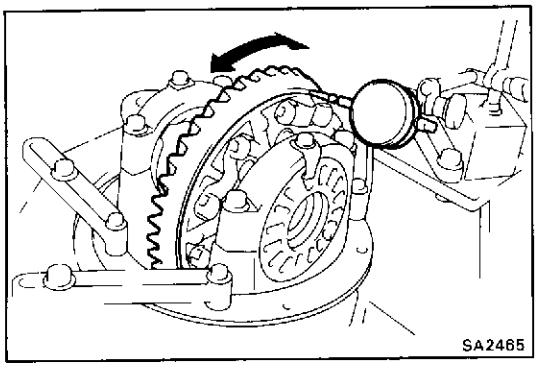

3. CHECK RING GEAR RUNOUT

(a) Install the differential case onto the carrier.

(b) Install bearing caps. (See page SA-75)

(c) Using a dial indicator, measure the runout of ring gear

Maximum runout: 0.10 mm (0.0039 in.)

(d) Remove the differential case.
(See step 7 on page SA-67)

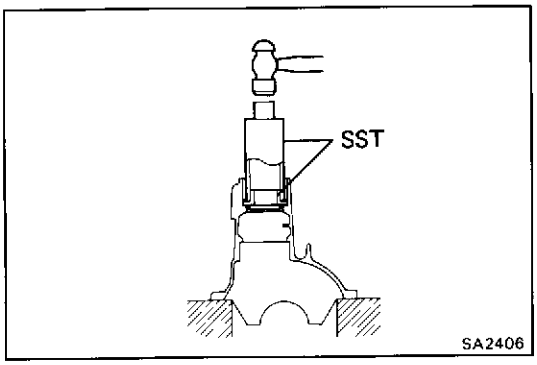

4. (FJ, PZJ, HZJ) INSTALL OIL STORAGE RING

Using SST and a hammer, install a new oil storage ring

SST 09316-60010 (09316-00010, 09316-00020)

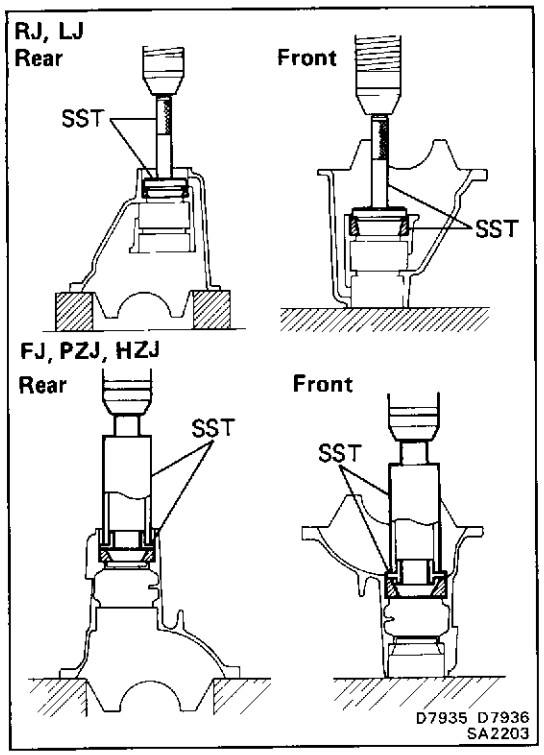

5. INSTALL DRIVE PINION FRONT AND REAR BEARING OUTER RACES

Using SST and a press, install the outer races.

SST 09608-30012 (RJ, LJ)
Rear (09608-04020, 09608-04110)
Front (09608-04020, 09608-04100)
09316-60010 (FJ, PZJ, HZJ)
Rear (09316-00010, 09316-00020)
Front (09316-00010, 09316-00050)

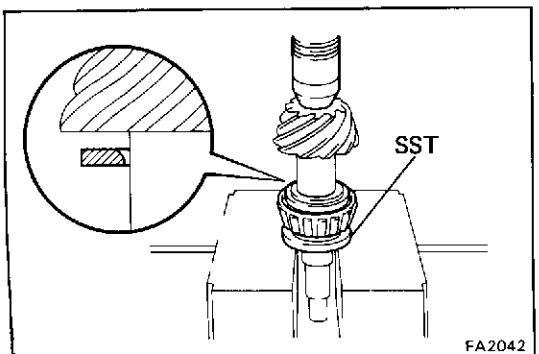

6. INSTALL DRIVE PINION FRONT BEARING

(a) Install the washer on the drive pinion with the cha fered end facing the pinion gear
HINT: First fit a washer with the same thickness the washer which was removed, then after check the teeth contact pattern, replace the washer w one of a different thickness if necessary.

(b) Using SST, press in the front bearing onto the dr pinion.

SST 09506-30012

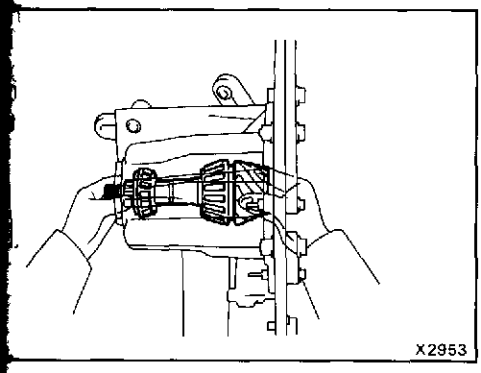

7. TEMPORARILY ADJUST DRIVE PINION PRELOAD

(a) Install the drive pinion, rear bearing and oil slinger.

HINT. Assemble the spacer and oil seal after adjusting the teeth contact pattern.

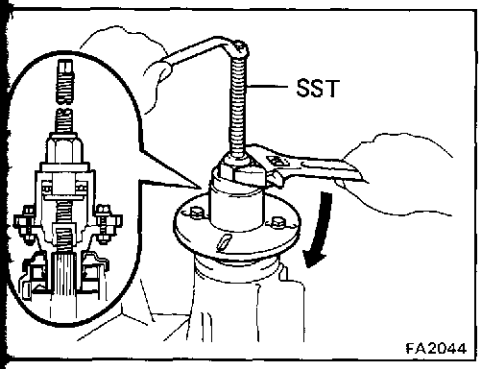

(b) Using SST, install the companion flange.

SST 09557-22022 (09557-22050)

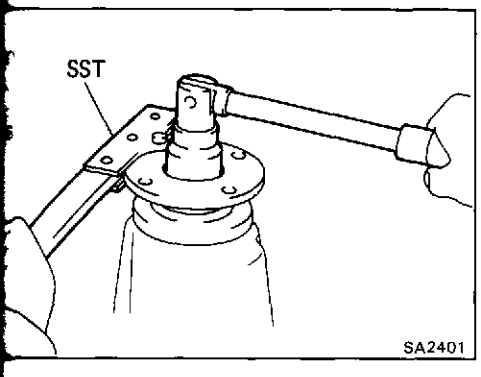

(c) Adjust the drive pinion preload by tightening the plate washer and companion flange nut.

HINT: Using SST to hold the flange, tighten the nut .

SST 09330-00021

NOTICE: As there is no spacer, tighten the nut a little at a time, being careful not to overtighten it.

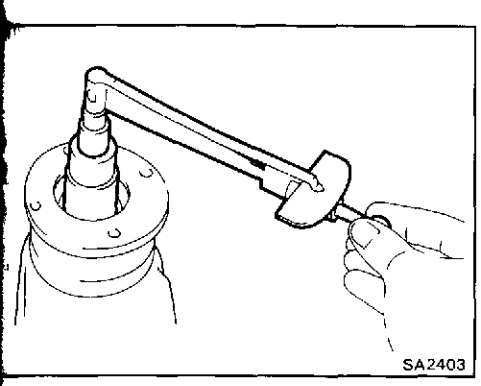

(d) Using a torque meter, measure the preload.

Preload (at starting):

Models	New bearing	Reused bearing
RJ, LJ	19 — 26 kg-cm (16 5 — 22.6 in.-lb 1.9 — 2.5 N·m)	9 — 13 kg-cm (7.8 — 11.3 in.-lb 0.9 — 1.3 N·m)
FJ, PZJ, HZJ	10 — 16 kg-cm (8.7 — 13.9 in.-lb 0.9 — 1.6 N·m)	5 — 8 kg-cm (4.3 — 6.9 in.-lb 0.5 — 0 8 N·m)

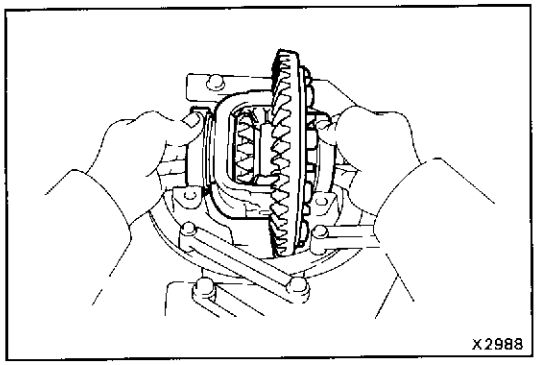
X2988

8. INSTALL DIFFERENTIAL CASE AND ADJUSTING NUTS (2 PINION TYPE)

(a) Place the bearing outer races on their respective bearings. Make sure that the left and right outer races are not interchanged.

(b) Install the case in the carrier.

HINT. Make sure that there is backlash between the ring gear and drive pinion.

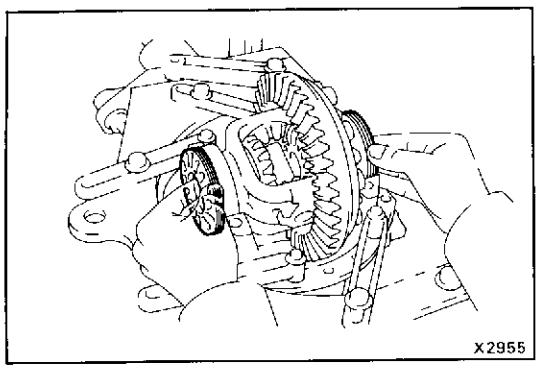
X2955

(c) Install the adjusting nuts on the carrier, making sure that the nuts are threaded properly.

(w/ DIFFERENTIAL LOCK)

(a) Apply MP grease on the rack of the shift fork and connecting part of the indicator switch.

(b) Insert the shift fork into the differential carrier as shown.

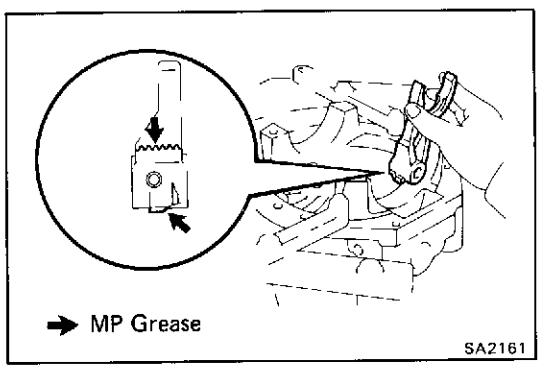

SA2161

(c) Install both bearing outer races, adjusting nuts and sleeve to the differential case.

HINT: Check that the sleeve moves smothly.

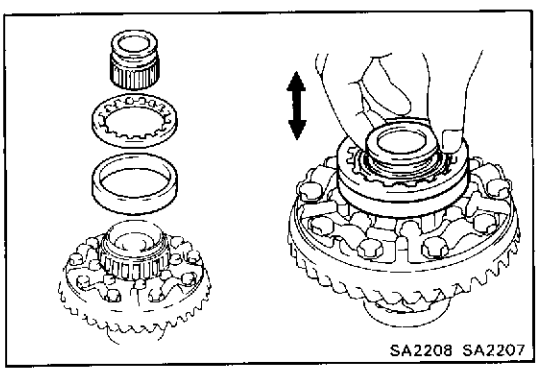
SA2208 SA2207

(d) Install the shift fork in the groove of the sleeve holding it by hand, install the case in the carrier

HINT: Make sure that there is backlash between th ring gear and drive pinion.

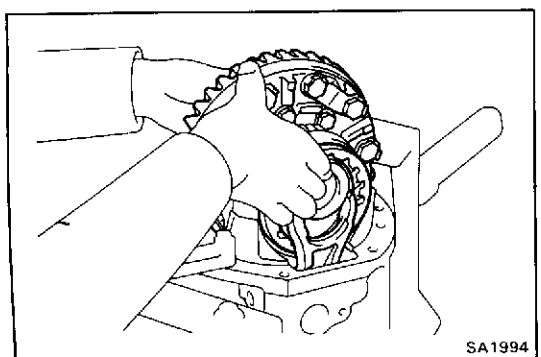
SA1994

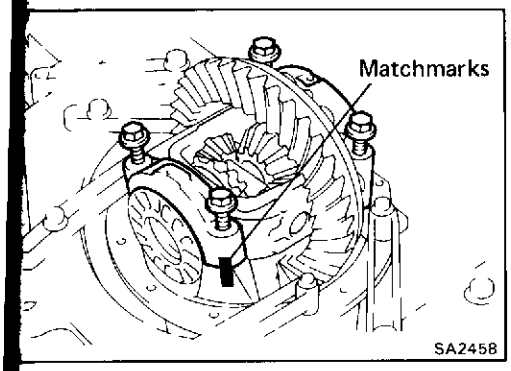

9. INSTALL BEARING CAPS

Align matchmarks on the cap and carrier. Screw in the two bearing cap bolts two or three turns and press down the bearing cap by hand.

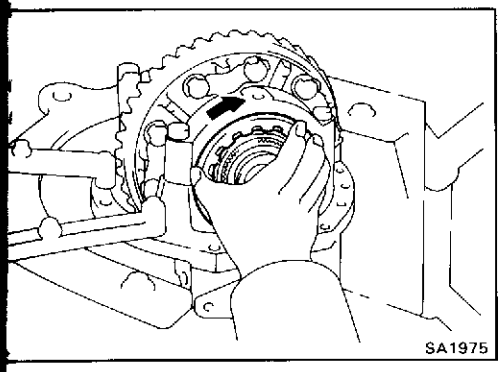

HINT: If the bearing cap does not fit tightly on the carrier, the adjusting nuts are not threaded properly. Reinstall the adjusting nuts if necessary.

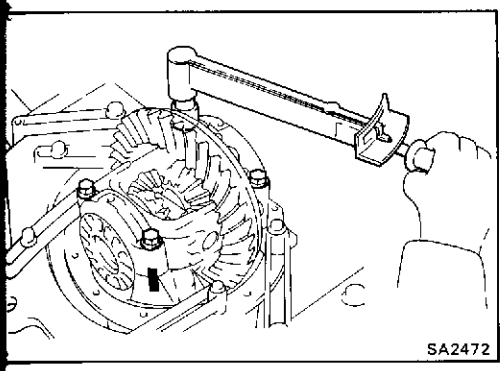

10. ADJUST SIDE BEARING PRELOAD

(a) Tighten the four bearing cap bolts to the specified torque, then loosen them to the point where they can be turned by hand.

Torque: 800 kg-cm (58 ft-lb, 78 N·m)

(b) Fully tighten the four bearing cap bolts by hand.

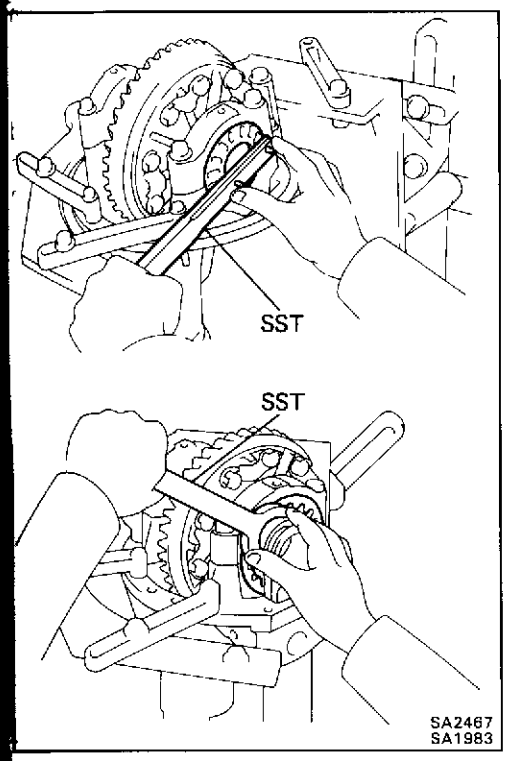

(c) Using SST, tighten the adjusting nut on the ring gear side until the ring gear has a backlash of about 0.2 mm (0.008 in.).

SST 09504-00011 or 09616-30020

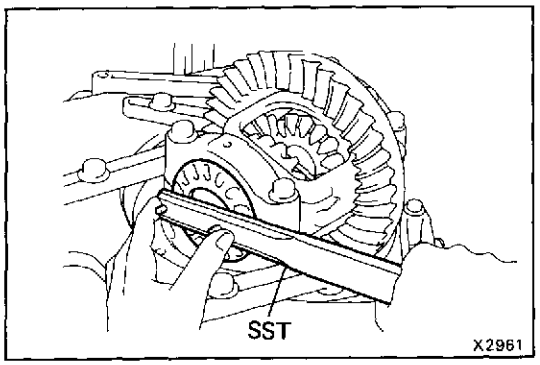

(d) While turning the ring gear, use SST to fully tighten the adjusting nut on the drive pinion side. After the bearings are settled, loosen the adjusting nut on the drive pinion side.

SST 09504-00011

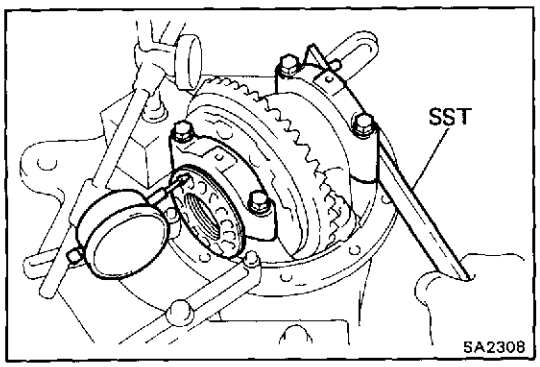

(e) Place a dial indicator on the top of the adjusting nut on the ring gear side.

(f) Adjust the side bearing for zero preload by tightening the other adjusting nut until the pointer on the indicator begins to move.

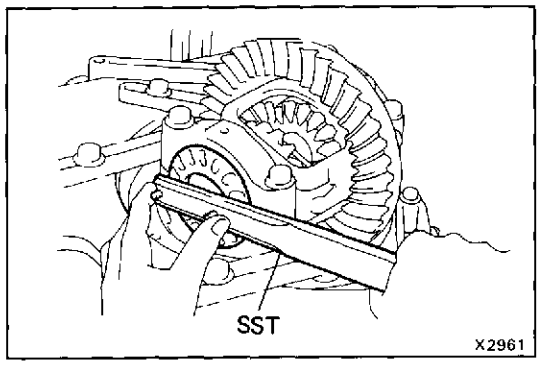

(g) Tighten the adjusting nut 1 - 1 1/2 notches from the zero preload position.

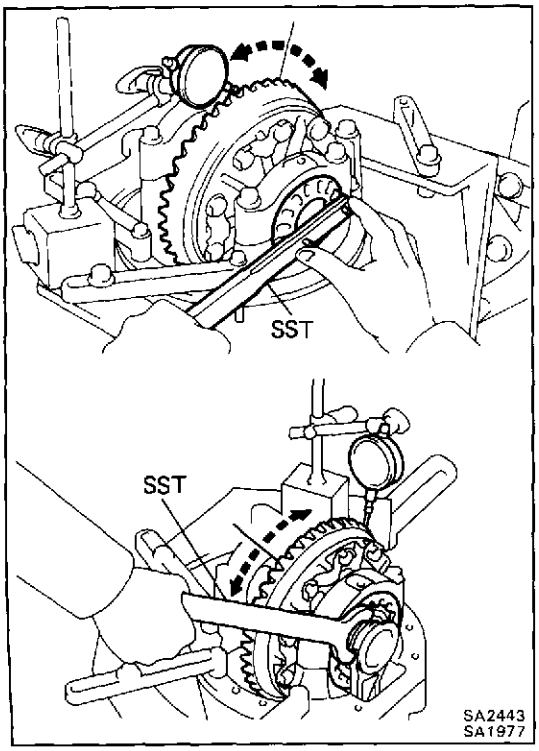

(h) Using a dial indicator, adjust the ring gear backlash until it is within specification.

Backlash: 0.13 — 0.18 mm (0.0051 — 0.0071 in.)

HINT: The backlash is adjusted by turning the left and right adjusting nuts equal amounts. For example, loosen the nut on the left side one notch and tighten the nut on the right side one notch.

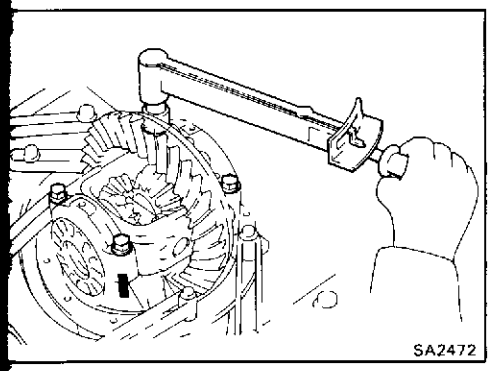
SA2472

(i) Torque the bearing cap bolts.

Torque: 800 kg-cm (58 ft-lb, 78 N·m)

(j) Recheck the ring gear backlash.

Backlash: 0.13 — 0.18 mm (0.0051 — 0.0071 in.)

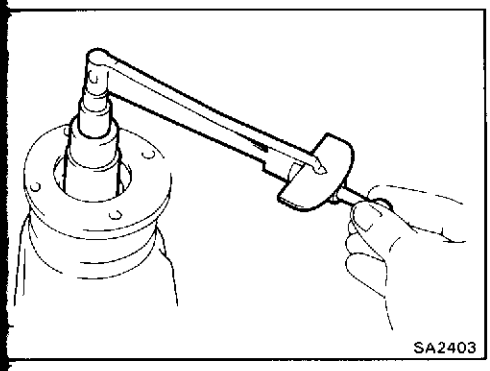
SA2403

(k) Using a torque meter, measure the total preload.

Total preload (at starting):
Add drive pinion preload
4 — 6 kg-cm
(3.5 — 5.2 in.-lb, 0.4 — 0.6 N·m)

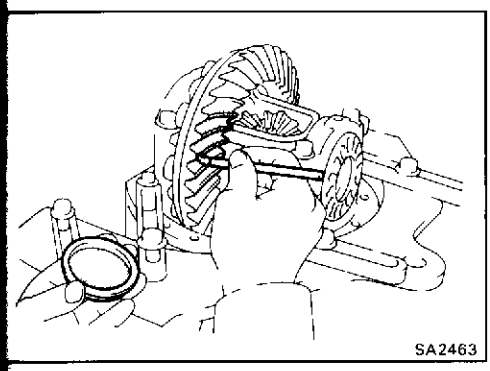
SA2463

11. INSPECT TEETH CONTACT BETWEEN RING GEAR AND DRIVE PINION

(a) Coat 3 or 4 teeth at three different positions on the ring gear with red lead

(b) Hold the companion flange firmly and rotate the ring gear in both directions.

(c) Inspect the teeth pattern.

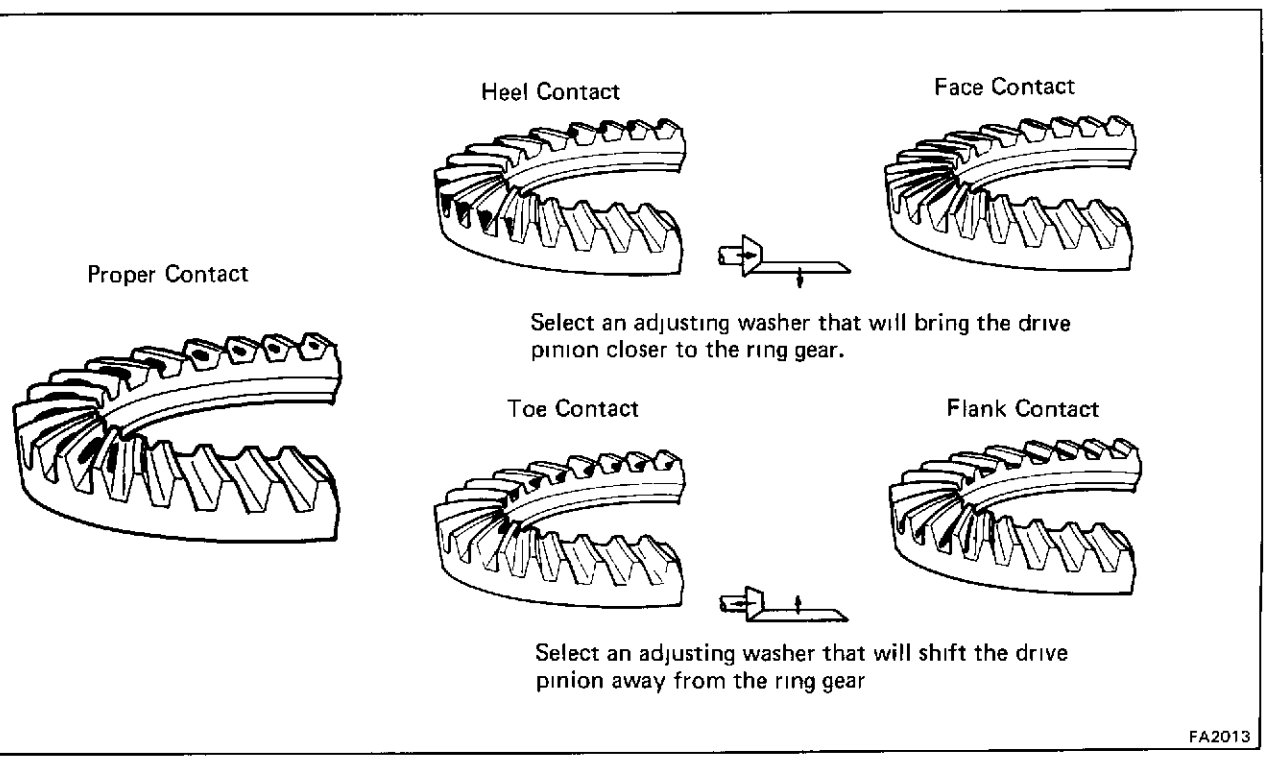

FA2013

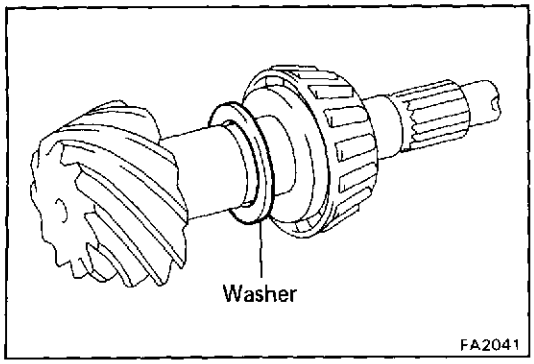

If the teeth are not contacting properly, use the following chart to select a proper washer for correction.

HINT: In the case of face contact or flank contact, it may be possible to make the adjustment within the backlash specification limits.

Washer thickness	mm (in.)
1.70 (0.0669)	2.03 (0.0799)
1.73 (0.0681)	2.06 (0.0811)
1.76 (0.0693)	2.09 (0.0823)
1.79 (0.0705)	2.12 (0.0835)
1.82 (0.0717)	2.15 (0.0846)
1.85 (0.0728)	2.18 (0.0858)
1.88 (0.0740)	2.21 (0.0870)
1.91 (0.0752)	2.24 (0.0882)
1.94 (0.0764)	2.27 (0.0894)
1.97 (0.0776)	2.30 (0.0906)
2.00 (0.0787)	2.33 (0.0917)

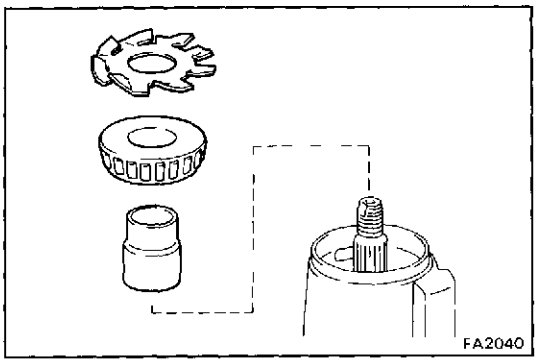

12. INSTALL NEW BEARING SPACER

(a) Remove the companion flange.
(See step 4 on page SA-66)

(b) Remove the oil slinger and rear bearing.
(See steps 5, 6 on pages SA-66, 67)

(c) Install a new bearing spacer.

(d) Install the rear bearing and oil slinger

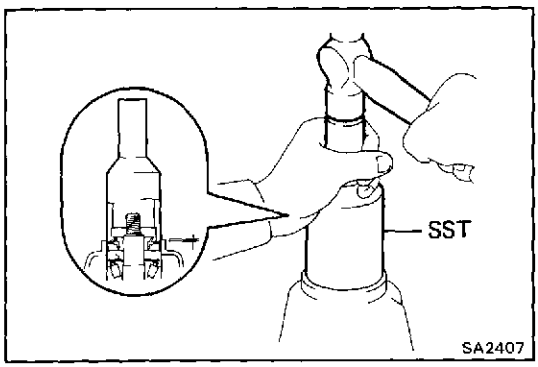

13. INSTALL OIL SEAL

(a) Using SST and a hammer, install a new oil seal.

SST 09554-30011 (RJ, LJ)
09214-76011 (FJ, PZJ, HZJ)

Oil seal drive in depth: 1.0 mm (0.039 in.)

(b) Coat the lip of oil seal with MP grease.

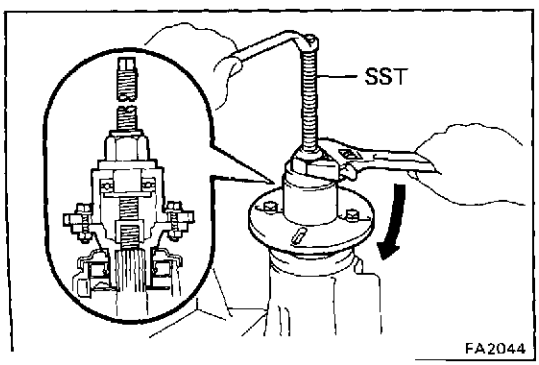

14. INSTALL COMPANION FLANGE

(a) Using SST, install the companion flange.

SST 09557-22022 (09557-22050)

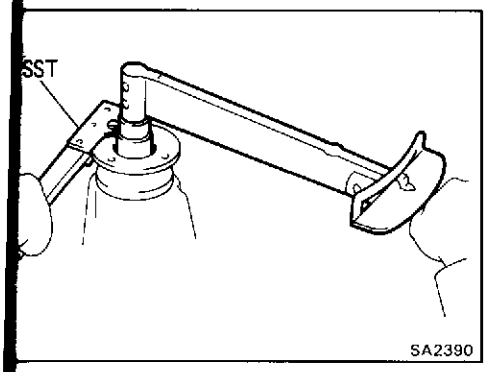

(b) Install the plate washer and a new nut.

HINT. Coat the threads of nut with gear oil.

(c) Using SST to hold the flange, tighten the nut.

SST 09330-00021

Torque: 2,000 kg-cm (145 ft-lb, 196 N·m)

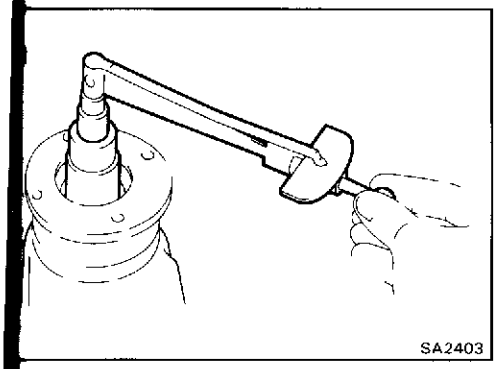

15. ADJUST DRIVE PINION PRELOAD

Using a torque meter, measure the preload of the backlash between the drive pinion and ring gear.

Preload (at starting):

Models	New bearing	Reused bearing
RJ, LJ	19 — 26 kg-cm (16.5 — 22.6 in.-lb, 1.9 — 2.5 N·m)	9 — 13 kg-cm (7.8 — 11.3 in.-lb, 0.9 — 1.3 N·m)
FJ, PZJ, HZJ	10 — 16 kg-cm (8.7 — 13.9 in.-lb, 0.9 — 1.6 N·m)	5 — 8 kg-cm (4.3 — 6.9 in.-lb, 0.5 — 0.8 N·m)

- If the preload is greater than specification, replace the bearing spacer.
- If the preload is less than specification, retighten the nut 130 kg-cm (9 ft-lb, 13 N·m) a little at a time until the specified preload is reached.

If the maximum torque is exceeded while retightening the nut, replace the bearing spacer and repeat the preload procedure. Do not back off the pinion nut to reduce the preload

Maximum torque: 3,500 kg-cm (253 ft-lb, 343 N·m)

If everything is normal, coat the threads with gear oil, then repeat the above operation.

16. RECHECK RING GEAR BACKLASH
(See step 3 on page SA-63)

17. RECHECK TEETH CONTACT BETWEEN RING GEAR AND DRIVE PINION
(See step 11 on page SA-77)

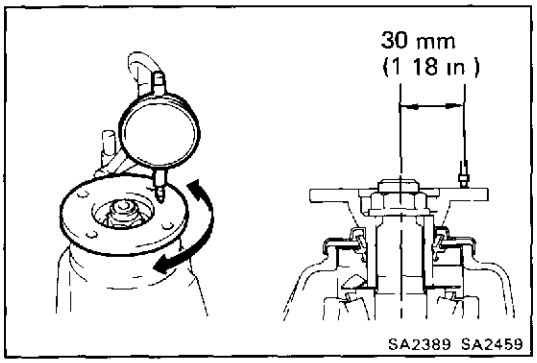

18. CHECK RUNOUT OF COMPANION FLANGE

Using a dial indicator, measure the vertical and lateral runout of the companion flange.

Maximum vertical runout: 0.10 mm (0.0039 in.)

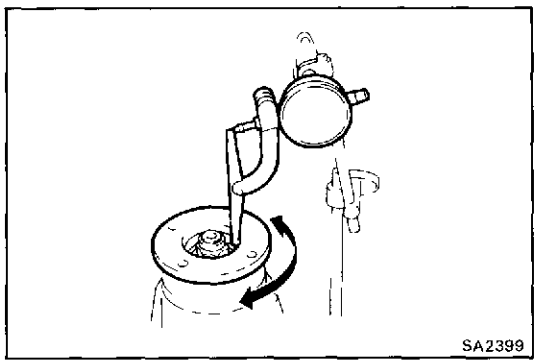

Maximum lateral runout: 0.10 mm (0.0039 in.)

If the runout is greater than the maximum, inspect the bearing.

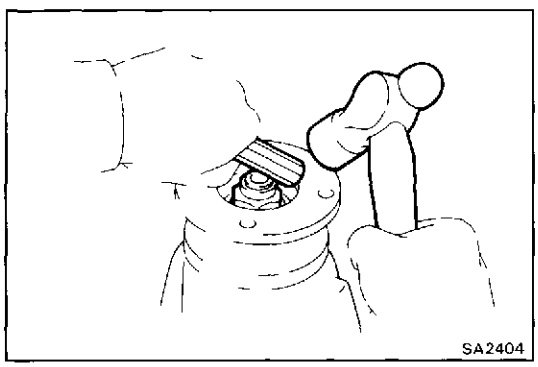

19. STAKE DRIVE PINION NUT

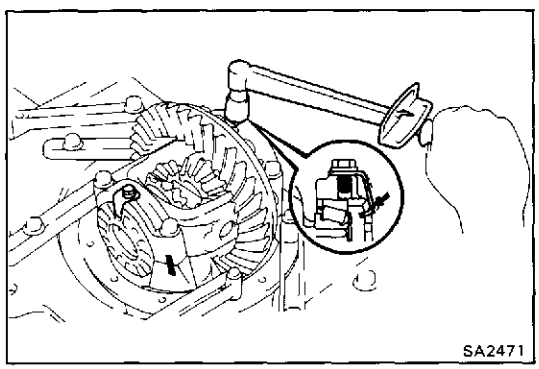

20. INSTALL ADJUSTING NUT LOCKS

(a) Install two new nut locks on the bearing caps.

Torque: 130 kg-cm (9 ft-lb, 13 N·m)

(b) After tightening the bolts, bend the nut locks

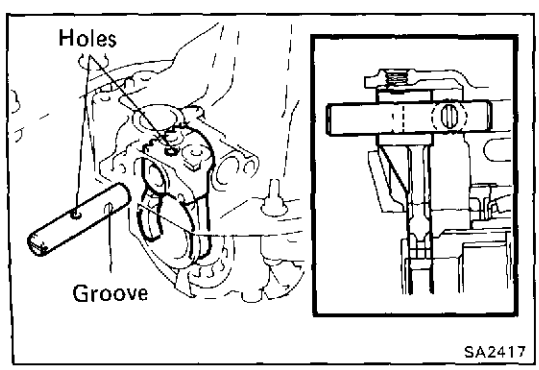

21. (w/ DIFFERENTIAL LOCK) INSTALL SHIFT FORK SHAFT

(a) Apply MP grease onto the outer circuit of the shaft.

(b) Install the fork shaft to match the hole of the fork and that of the shift fork shaft.

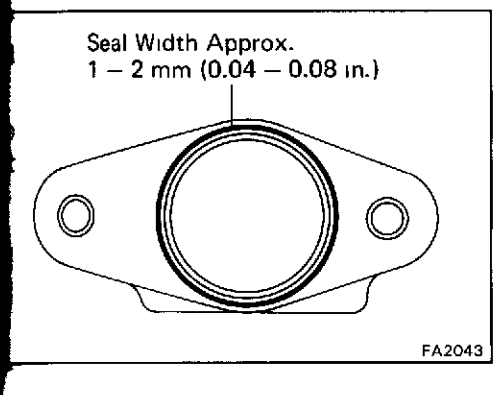

(c) Remove any packing material and be careful not to drop oil on the contacting surface of the differential carrier and shaft retainer.

(d) Apply seal packing to the carrier as shown.

Seal packing: Part No. 08826-00090, THREE BOND 1281 or equivalent

HINT: Install the shaft retainer within ten minutes after applying seal packing.

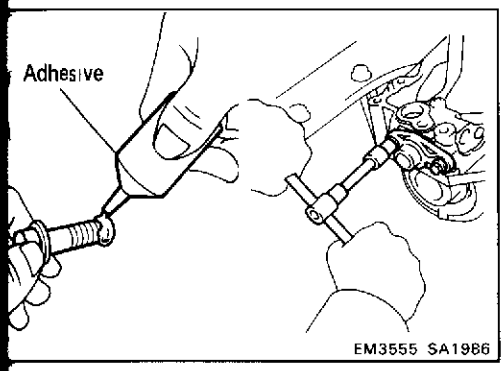

(e) Clean the threads of the bolts and retainer bolts holes with toluene or trichloroethylene.

(f) Apply adhesive to the bolt threads.

Adhesive: Part No. 08833-00080, THREE BOND 1344 LOCTITE 242 or equivalent

(g) Tighten the shaft retainer with the two bolts.

Torque: 240 kg-cm (17 ft-lb, 24 N·m)

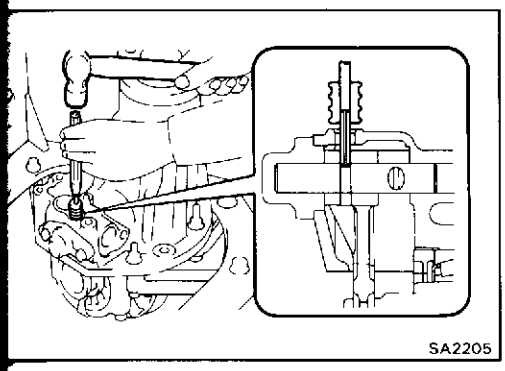

(h) Using a pin punch and hammer, drive in the slotted spring pin to the shift fork.

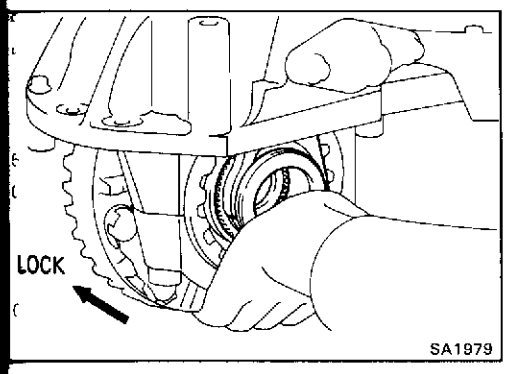

(i) Shift the shift fork deeply and keep the differential lock condition.

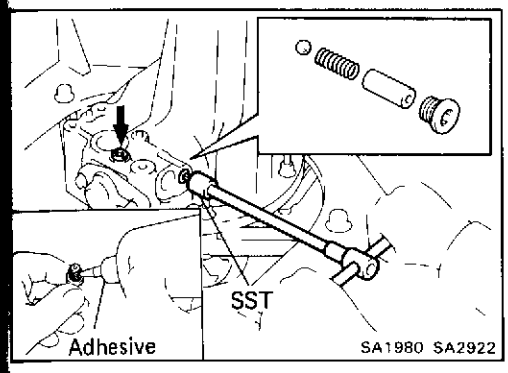

(j) Clean the threads of the plugs and plug holes with toluene or trichoroethylene.

(k) Install the ball, compression spring and spring seat.

(l) Apply adhesive to the plug threads.

Adhesive: Part No. 08833-00080, THREE BOND 1344, LOCTITE 242 or equivalent

(m) Using SST, install and tighten the screw plugs.

SST 09313 30021

Torque: 220 kg-cm (16 ft-lb, 22 N·m)

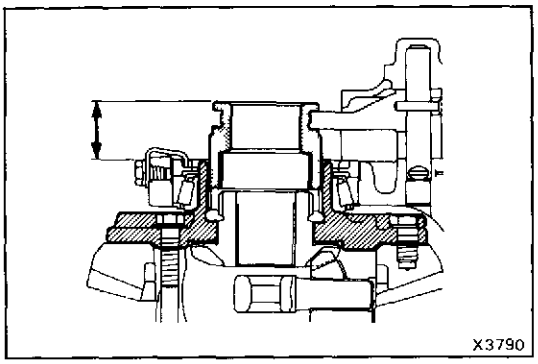

22. (w/ DIFFERENTIAL LOCK)
MEASURE DISTANCE BETWEEN SLEEVE AND DIFFERENTIAL CASE END SIDE

Measure the distance between the sleeve and the tip of the differential case when differential is free and locked

Standard distance:

LOCK	**32.40 — 33.90 mm (1.2756 — 1.3346 in.)**
FREE	**17.44 — 18.86 mm (0.6866 — 0.7425 in.)**

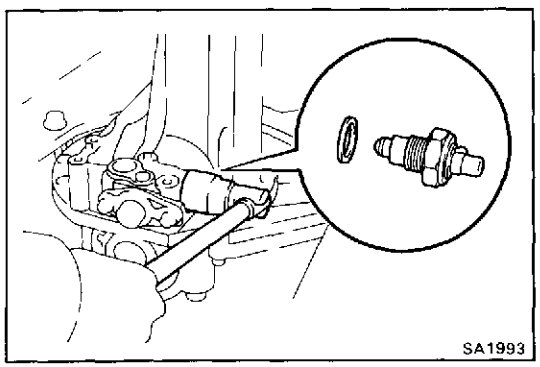

23. (w/ DIFFERENTIAL LOCK)
INSTALL INDICATOR SWITCH

Install the indicator switch with a new gasket.

Torque: 410 kg-cm (30 ft-lb, 40 N·m)

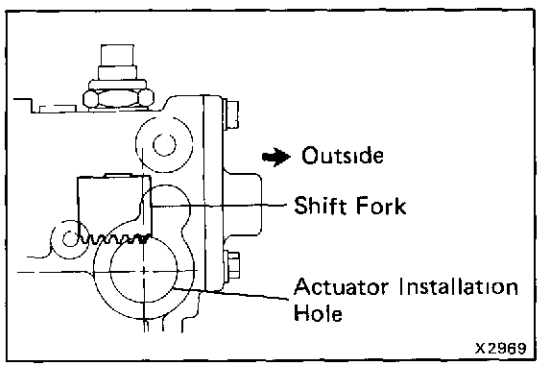

24. (w/ DIFFERENTIAL LOCK)
INSTALL ACTUATOR

(a) Check that the outermost rack tooth of the shift fork is virtually above the center line of the actuator installation hole.

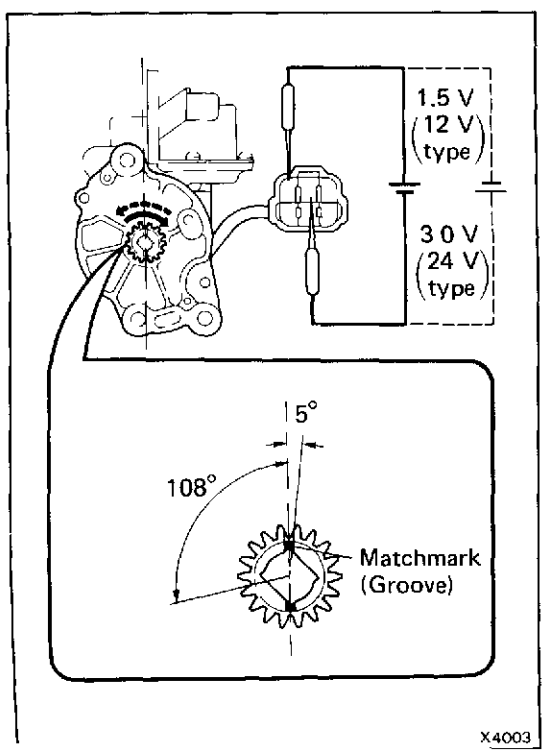

(b) Make sure that the matchmark of the pinion on the actuator is in between 0° to 5° degrees clockwise from the center line of the actuator.

HINT:

- Using a dry cell battery (12 V type is 1.5 V, 24 V type is 3.0 V), fit the matchmark on the actuator pinion to the center line of the actuator.
- Do not add battery voltage directly between terminals.
- When the matchmark comes to the end of rotation, do not electrify any longer.

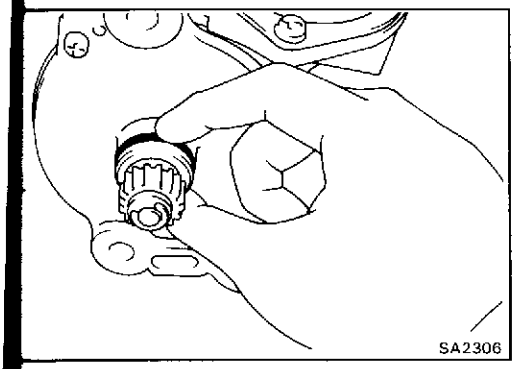

(c) Install a new O-ring to the actuator.

(d) Apply a light coat of gear oil on the O-ring.

(e) Apply MP grease to the gear part.

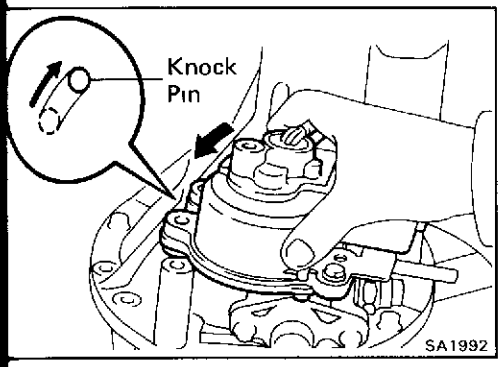

(f) Insert the actuator so that the long hole on the actuator side fits with the knock pin on the carrier side

HINT: Do not damage the O-ring of the actuator.

(g) Align the actuator with the long hole and rotate the actuator counterclockwise when the knock pin reaches the right-hand side.

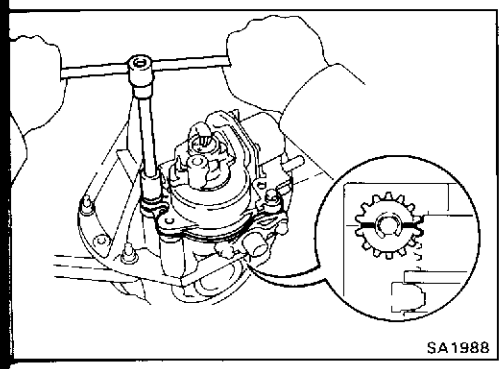

(h) Install the actuator to the differential carrier with bolt so that the outermost rack tooth of the shift fork shall fit the matchmark of the pinion of the actuator.

Torque: 270 kg-cm (20 ft-lb, 26 N·m)

Differential Case (2 Pinion Type)

COMPONENTS

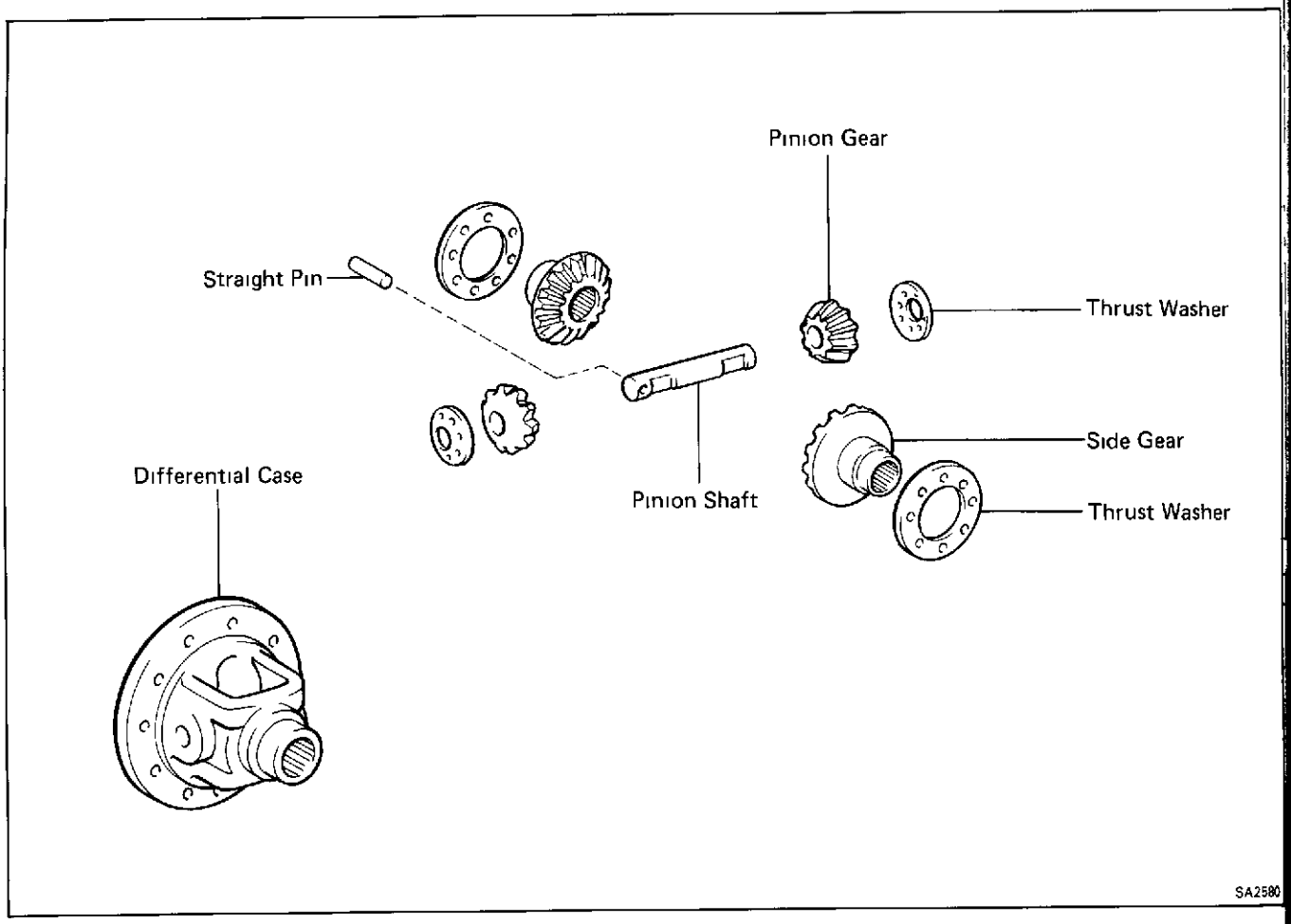

REMOVAL OF DIFFERENTIAL CASE

1. **REMOVE DIFFERENTIAL (See page SA-56)**
2. **REMOVE DIFFERENTIAL CASE FROM CARRIER (See page SA-62)**

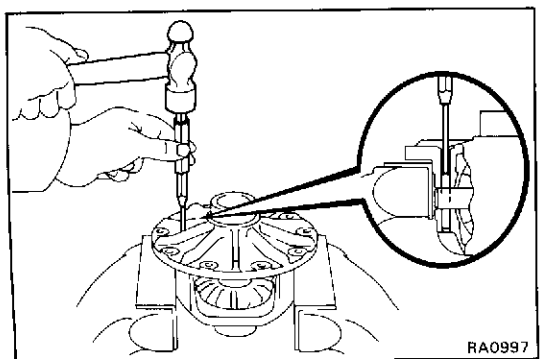

REPLACEMENT OF DIFFERENTIAL CASE COMPONENT PARTS

1. **DISASSEMBLE DIFFERENTIAL CASE**

Using a hammer and punch, drive out the straight pin. Re move the pinion shaft, two pinion gears, two side gea and four thrust washers.

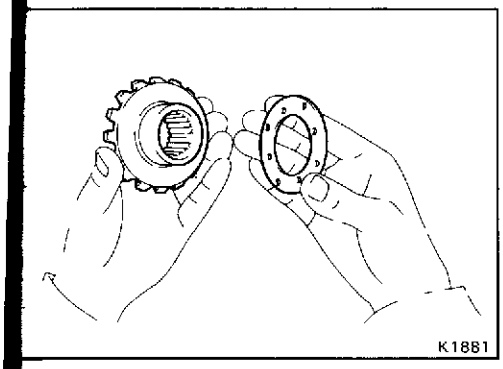
K1881

2. ASSEMBLE DIFFERENTIAL CASE

(a) Apply gear oil to each part.

(b) Install the proper thrust washers and side gears.

Using the table below, select thrust washers which will ensure that the backlash is within specification. Try to select washers of the same size for both sides.

Standard backlash: 0.05 — 0.20 mm (0.0020 — 0.0079 in.)

Thrust washer thickness mm (in.)
1.6 (0.063)
1.7 (0.067)
1.8 (0.071)

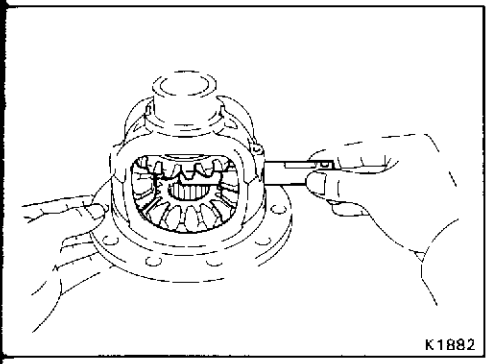
K1882

(c) Install thrust washers, side gears, pinion gears and pinion shaft in the differential case.

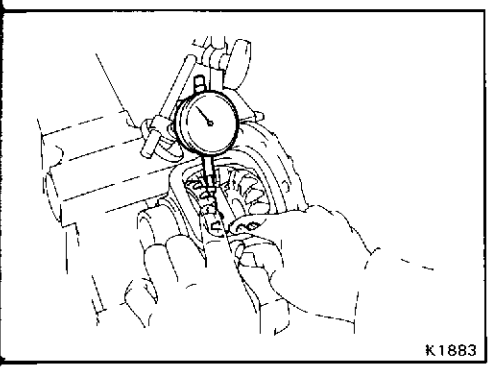
K1883

(d) Check the side gear backlash.

Measure the side gear backlash while holding one pinion gear toward the case.

Standard backlash: 0.05 — 0.20 mm (0.0020 — 0.0079 in.)

If the backlash is not within specification, install a thrust washer of different thickness.

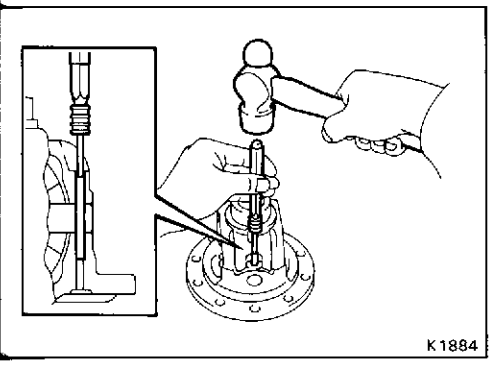
K1884

(e) Using a hammer and punch, install the straight pin through the case and hole of the pinion shaft

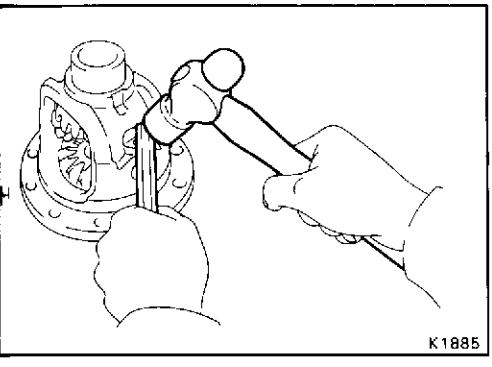
K1885

(f) Stake the differential case.

INSTALLATION OF DIFFERENTIAL

1. **INSTALL DIFFERENTIAL CASE IN CARRIER** **(See page SA-62)**

2. **INSTALL DIFFERENTIAL** **(See page SA-56)**

COIL SPRING TYPE FRONT SUSPENSION

COMPONENTS

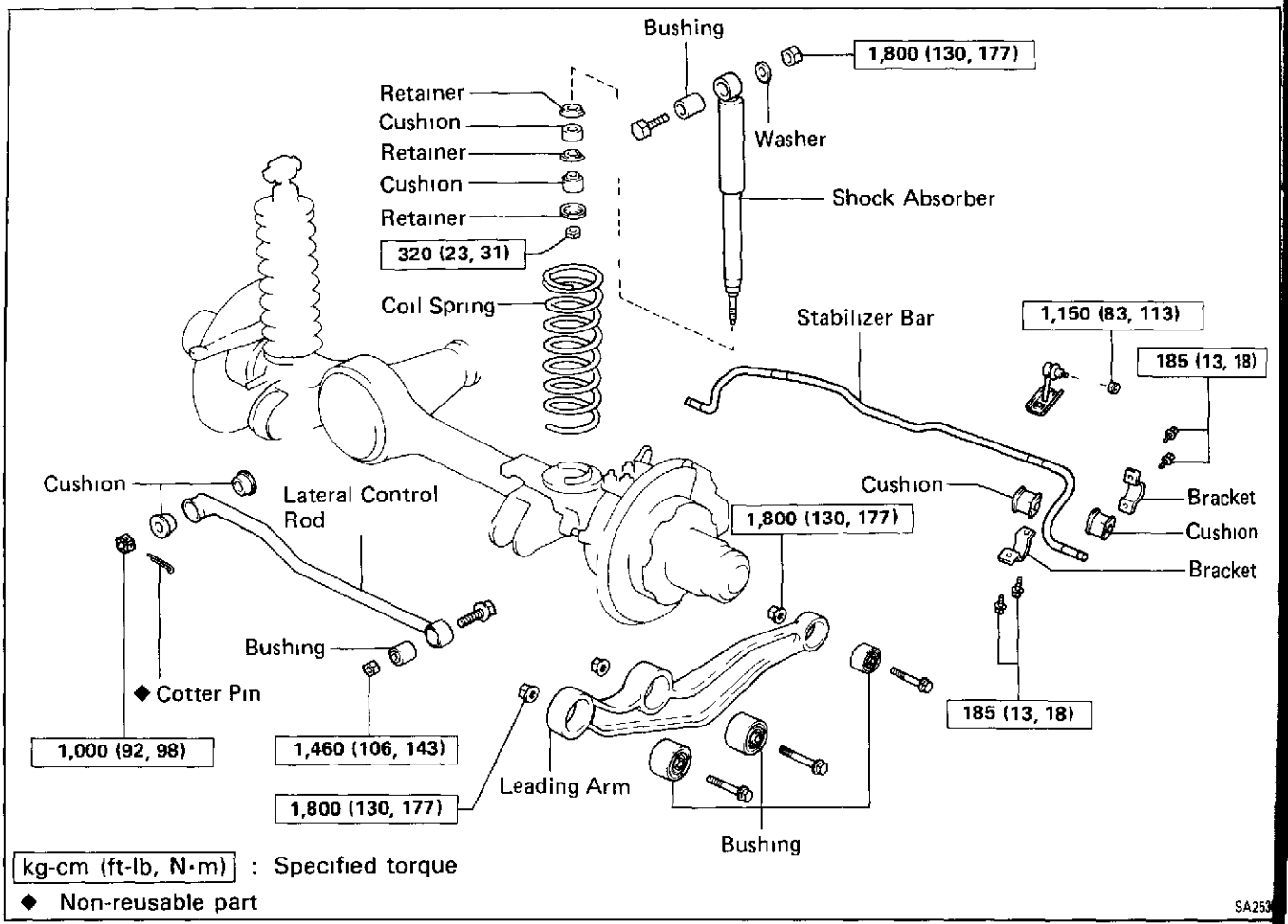

kg-cm (ft-lb, N·m) : Specified torque

◆ Non-reusable part

SA253

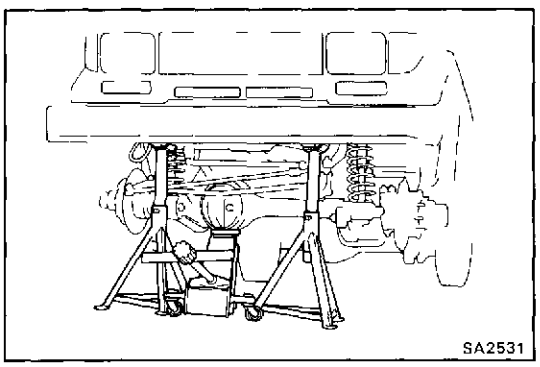

SA2531

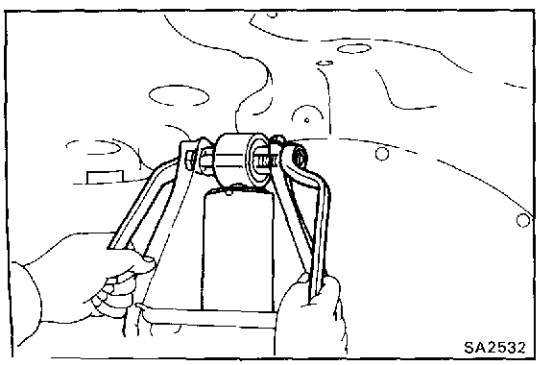

SA2532

Coil Spring and Shock Absorber

REMOVAL OF COIL SPRING AND SHOCK ABSORBER

1. **JACK UP AND SUPPORT BODY**
   (a) Jack up and support the frame on stands.
   (b) Remove the wheel.
2. **JACK UP AND SUPPORT AXLE HOUSING**
3. **REMOVE FRONT SHOCK ABSORBER MOUNTING BO AND NUTS**
   (a) Hold the upper mounting bolt and remove the up mounting bolt, nut and washer

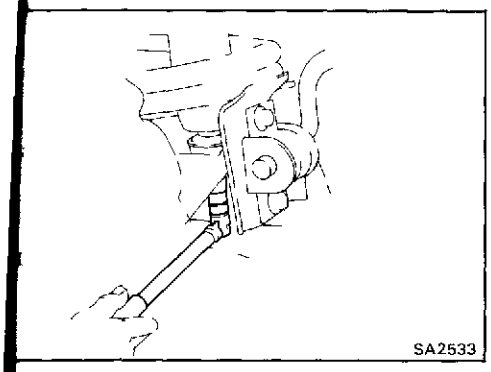

(b) Remove the lower mounting nut, cushions and retainers.

(c) Disconnect the shock absorber.

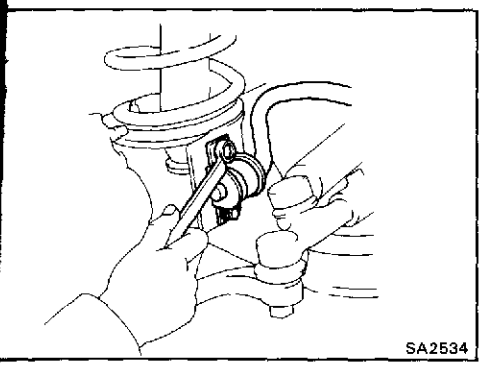

4. DISCONNECT STABILIZER BAR

Remove the two bolts, and disconnect the stabilizer bar from the axle housing.

5. JACK DOWN AND SUPPORT AXLE HOUSING

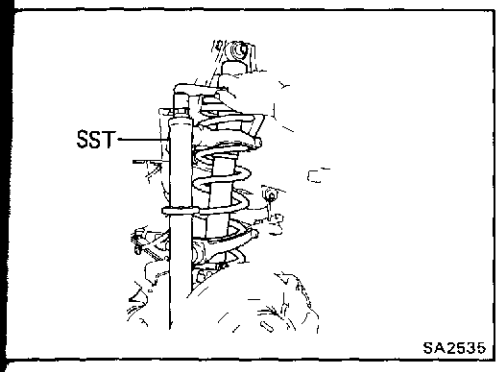

6. REMOVE COIL SPRING AND SHOCK ABSORBER

(a) Using SST, compress the coil spring.

SST 09727-30020

(b) Compress the shock absorber.

(c) Remove the coil spring with the shock absorber.

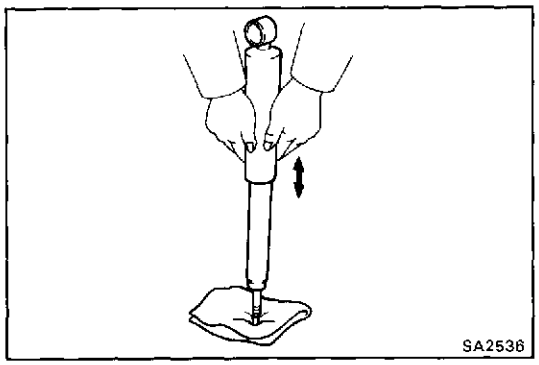
SA2536

INSPECTION OF FRONT SHOCK ABSORBER

1. INSPECT OPERATION OF SHOCK ABSORBER

(a) While pushing the shock absorber, check that the pull throughout the stroke is even, and there is no abnormal resistance or noise.

(b) Push the shock absorber in fully and release it. Check that it returns at a contact speed throughout

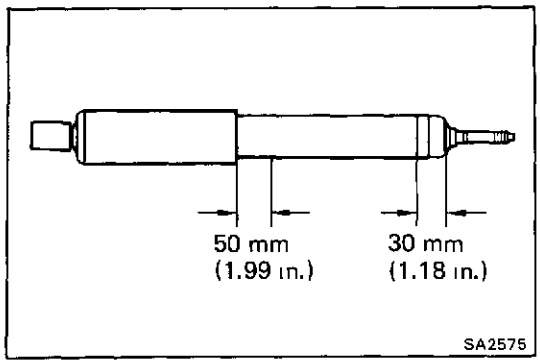

SA2575

2. IF NECESSARY, DISCARD SHOCK ABSORBER

Before discarding the shock absorber, drill a hole 2 – 3 mm (0.079 — 0.118 in.) in diameter at the location shown in the illustration to release the gas inside.

NOTICE:

- **When drilling, chips may fly out, so work carefully.**
- **The gas is colorless, odorless and non-poisonous.**

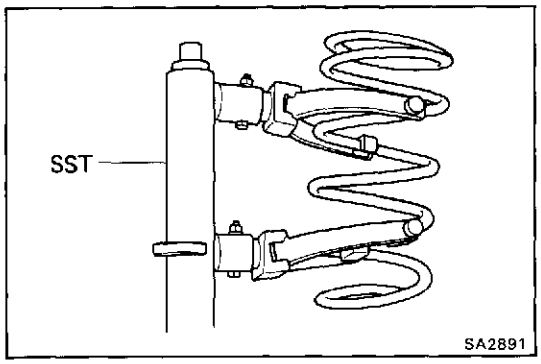

SA2891

INSTALLATION OF COIL SPRING AND SHOCK ABSORBER

(See page SA-98)

1. INSTALL COIL SPRING

(a) Using SST, compress the coil spring.

SST 09727-30020

(b) Compress the shock absorber.

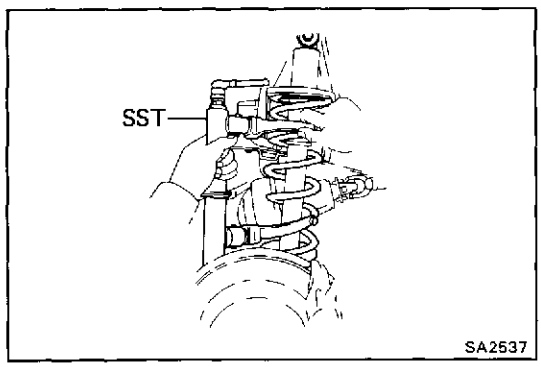

SA2537

(c) Install the coil spring with the shock absorber.

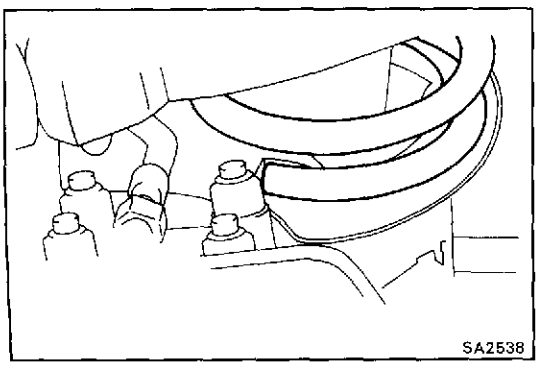
SA2538

(d) Align the coil spring end with the lower seat ho

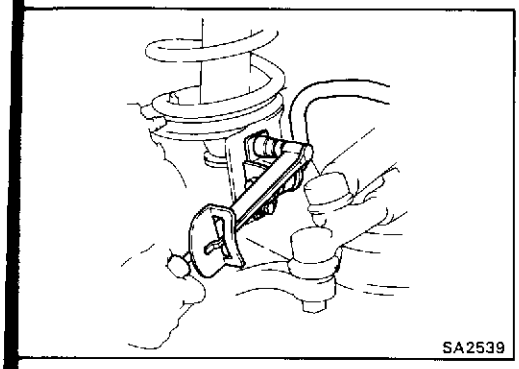
SA2539

2. CONNECT STABILIZER BAR

Connect the stabilizer bar to the axle housing with the two bolts

Torque: 185 kg-cm (13 ft-lb, 18 N·m)

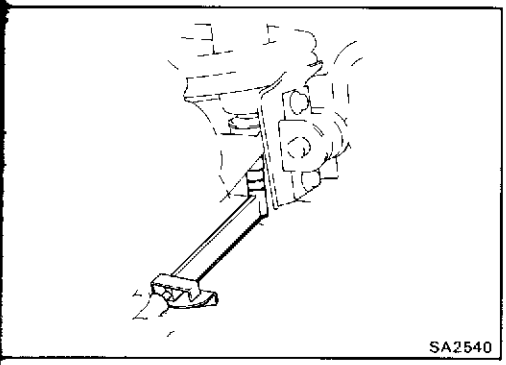
SA2540

3. INSTALL SHOCK ABSORBER

(a) Install the retainers and cushions and connect the shock absorber.

(b) Install the lower mounting nut.

Torque: 320 kg-cm (23 ft-lb, 31 N·m)

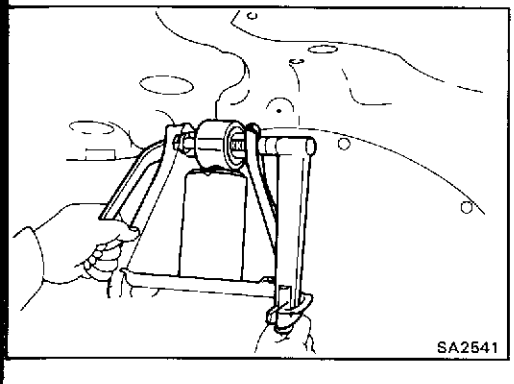
SA2541

(c) Insert the bolt from the front side.

(d) Hold the mounting bolt, and install the upper mounting bolt, nut and washer.

Torque: 1,800 kg-cm (130 ft-lb, 177 N·m)

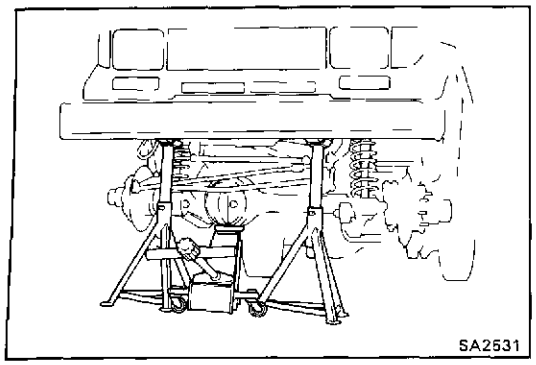
SA2531

Lateral Control Rod

(See page SA-98)

REMOVAL OF LATERAL CONTROL ROD

1. JACK UP AND SUPPORT BODY

Jack up and support the frame on the stands.

Hold the front axle housing with a jack.

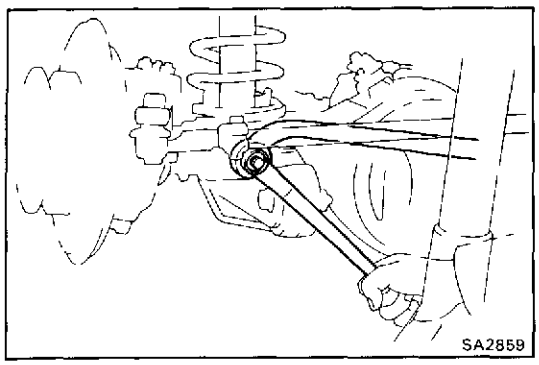
SA2859

2. DISCONNECT LATERAL CONTROL ROD FROM AXLE HOUSING

(a) Hold the lateral control rod with a jack.

(b) Remove the cotter pin and castle nut, and disconnect the lateral control rod from the front axle housing.

(c) Remove the cushions from the lateral control rod.

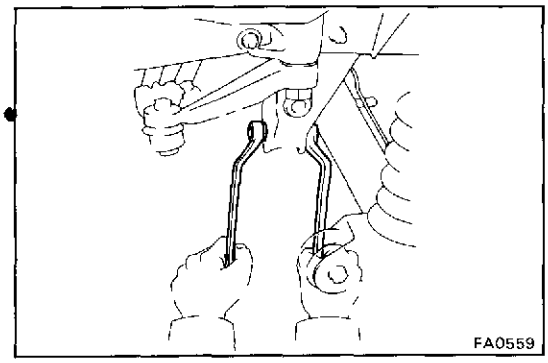
FA0559

3. REMOVE LATERAL CONTROL ROD FROM FRAME

Remove the bolt, nut and lateral control rod

REPLACEMENT OF LATERAL CONTROL ROD BUSHING

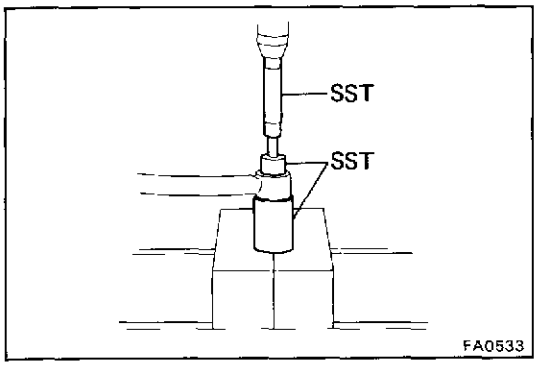

FA0533

1. REMOVE BUSHING

Using SST and a press, press the bushing from the lateral control rod.

SST 09710-22041

(09710-02020, 09710-02050, 09710-02070)

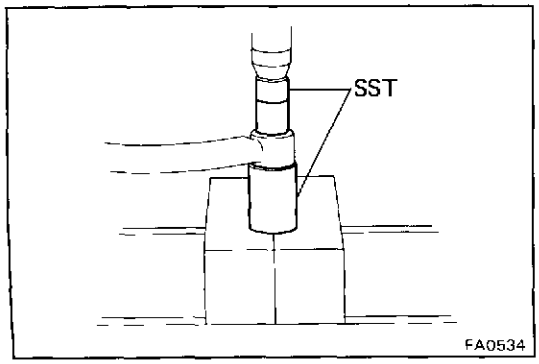

FA0534

2. INSTALL BUSHING

Using SST and a press, press a new bushing into the lateral control rod

SST 09710-22041 (09710-02050, 09710-02070)

HINT: Do not use a lubricant when pressing in the bushing.

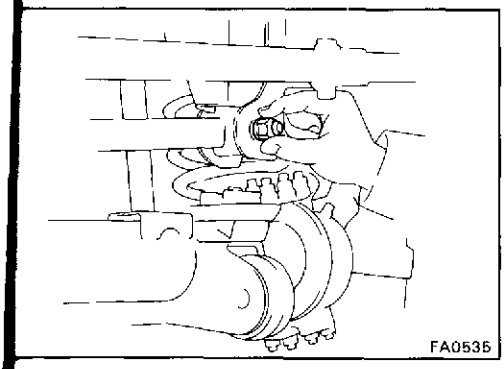
FA0535

INSTALLATION OF LATERAL CONTROL ROD

(See page SA-98)

1. INSTALL LATERAL CONTROL ROD TO FRAME

Temporarily install the lateral control rod to the frame with the bolt and nut.

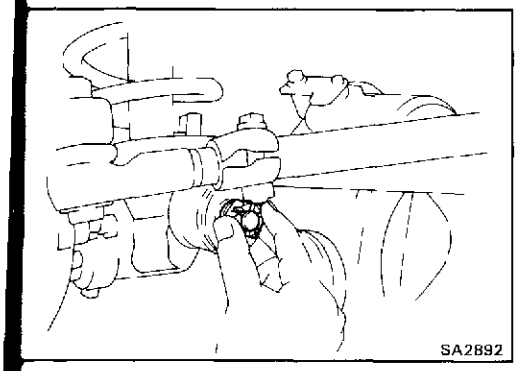
SA2892

2. CONNECT LATERAL CONTROL ROD TO AXLE HOUSING

Temporarily connect the lateral control rod to the axle housing with the nut and cushions.

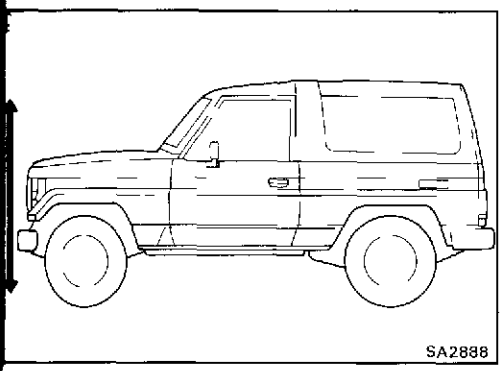
SA2888

3. STABILIZE SUSPENSION

(a) Lower the vehicle.

(b) Boucnce the vehicle up and down to stabilize the suspension.

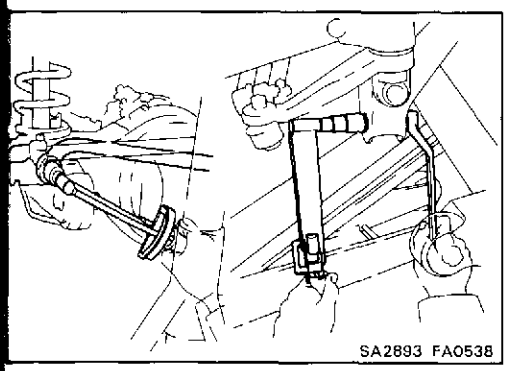
SA2893 FA0538

4. TORQUE BOLTS AND NUT

(a) Torque the bolt and nuts

Torque:

Body side:	**1,460 kg-cm (106 ft-lb, 143 N·m)**
Axle housing side:	**1,000 kg-cm (72 ft-lb, 98 N·m)**

(b) Install a new cotter pin to the axle housing side mounting bolt

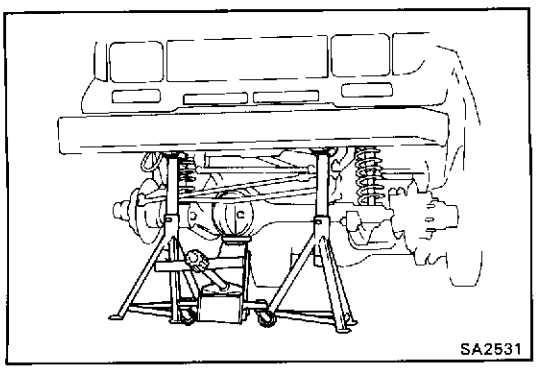
SA2531

Leading Arm

(See page SA-98)

REMOVAL OF LEADING ARM

1. JACK UP VEHICLE

Jack up and support the frame with stands.

Hold the front axle housing with a jack.

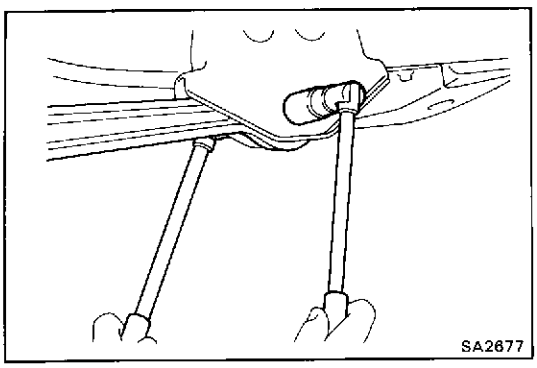
SA2677

2. REMOVE LEADING ARM

(a) Hold the leading arm with a jack.

(b) Remove the bolt and nut of the frame side.

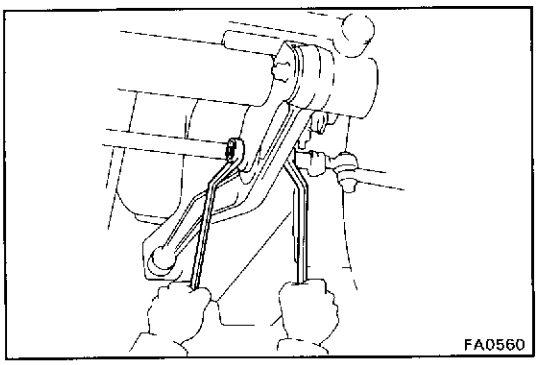
FA0560

(c) Remove the two bolts and nuts of the axle housing side, then remove the leading arm.

REPLACEMENT OF LEADING ARM BUSHING

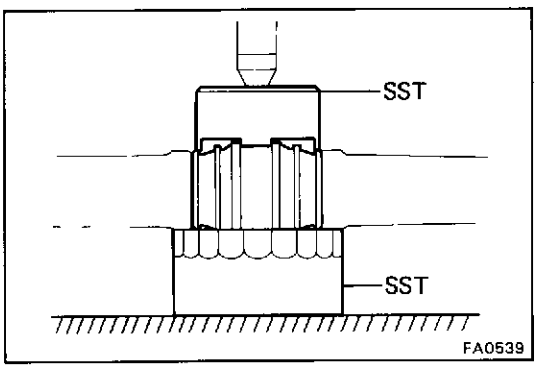

FA0539

1. REMOVE BUSHINGS

Using SST and a press, press out the bushings from the leading arm.

SST 09228-22020, 09710-30030 (09710-03180)

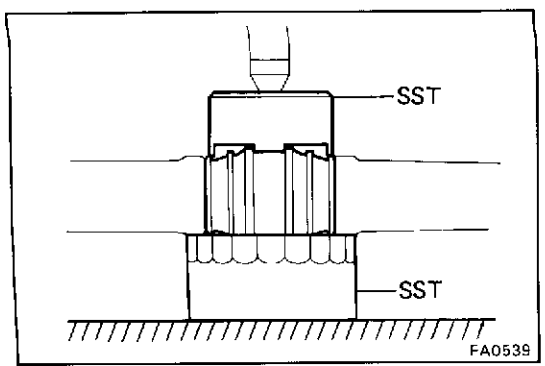

FA0539

2. INSTALL BUSHINGS

Using SST and a press, press new bushings into the leading arm.

SST 09228-22020, 09710-30030 (09710-03180)

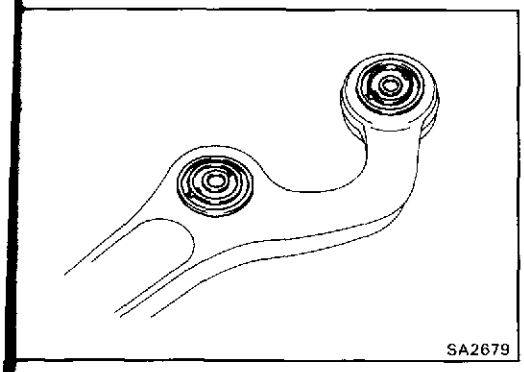
SA2679

HINT. When assembling the bushing, assemble it so its holes are aligned horizontally.

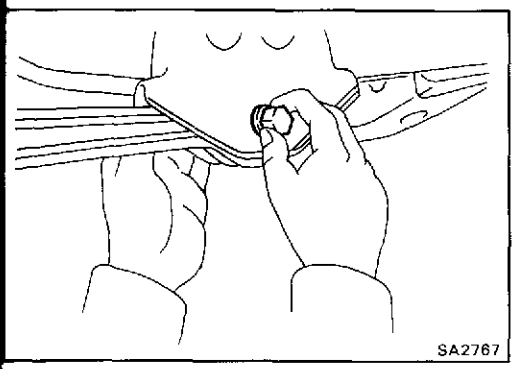
SA2767

INSTALLATION OF LEADING ARM

(See page SA-98)

1. INSTALL LEADING ARM TO FRAME

(a) Insert the bolt from the outside.

(b) Temporarily install the leading arm to the body with the bolt and nut.

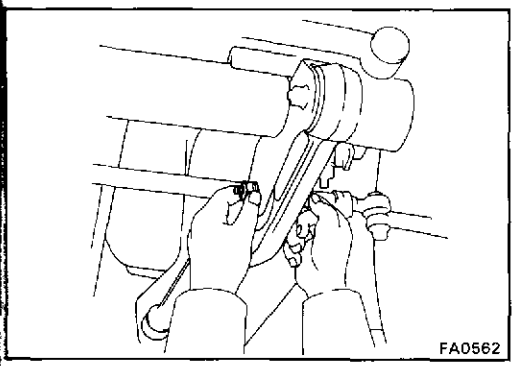
FA0562

2. INSTALL LEADING ARM TO AXLE HOUSING

(a) Insert the two bolts from the outside.

(b) Temporarily connect the leading arm to the axle housing with the two bolts and nuts

3. JACK DOWN VEHICLE AND REMOVE STAND

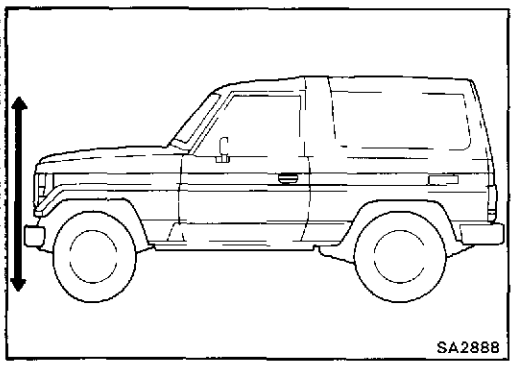
SA2888

4. STABILIZE SUSPENSION

Bounce the vehicle up and down to stabilize the suspension.

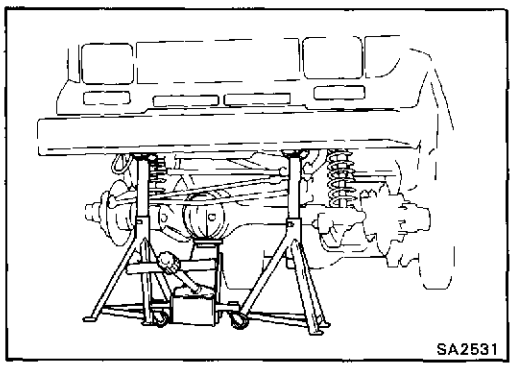
SA2531

5. TORQUE NUTS

(a) Jack up the axle housing.

HINT: For safety, place stands under either side of the vehicle's frame.

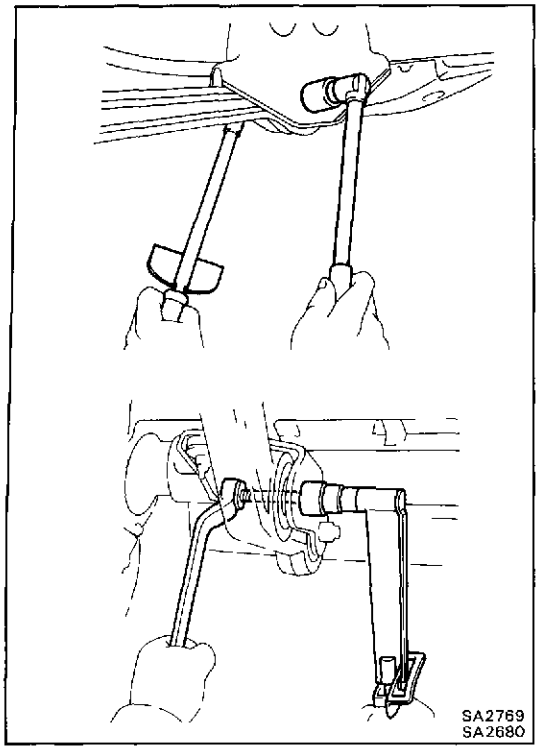

(b) Torque the bolts and nuts.

Torque: 1,800 kg-cm (130 ft-lb, 177 N·m)

HINT: When tighten the nuts, tighten with the vehicle's full weight applied to the axle housing.

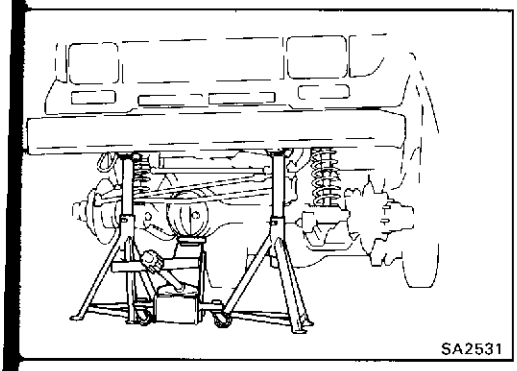
SA2531

Stabilizer Bar

REMOVAL OF STABILIZER BAR

(See page SA-98)

1. JACK UP AND SUPPORT VEHICLE WITH FRAME

(a) Jack up and support the frame on stands.

(b) Lower the axle housing until the leaf spring tension is free, and keep it at this position.

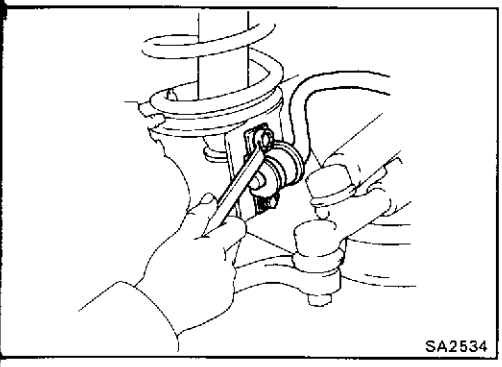
SA2534

2. REMOVE STABILIZER BAR

(a) Remove the bolts of the both stabilizer brackets, and disconnect the stabilizer bar from the axle housing.

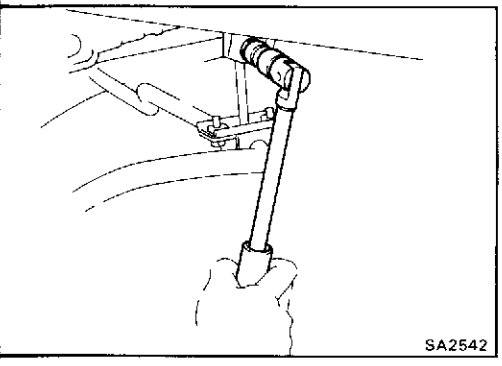
SA2542

(b) Remove the nuts, holding both sides of the stabilizer link to the frame and remove the stabilizer bar

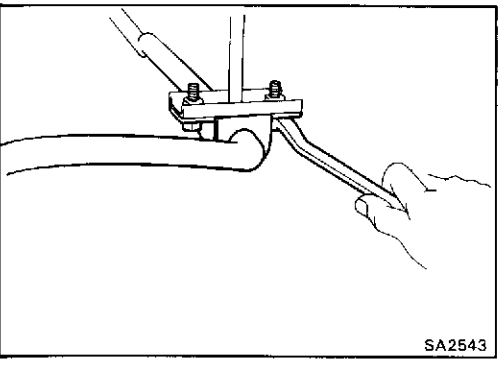
SA2543

(c) Remove the two bolts, brackets, cushions and the stabilizer link from the stabilizer bar.

(d) Simirarly remove the other side stabilizer link from the stbilizer bar.

INSPECTION OF STABILIZER LINK

INSPECT STABILIZER LINK

Rotate the ball joint arm in all directions, if the movement is not smooth and free, replace the stabilizer link.

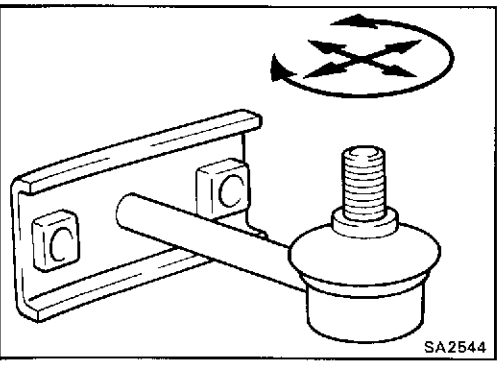
SA2544

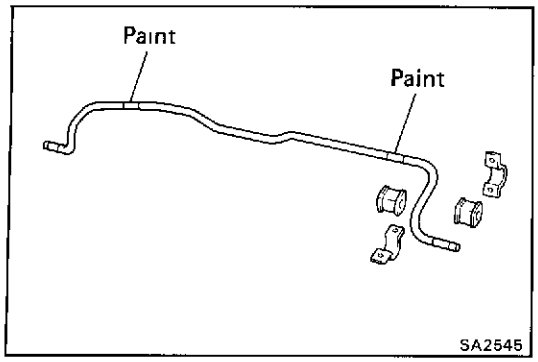

INSTALLATION OF STABILIZER BAR

(See page SA-98)

1. INSTALLATION STABILIZER BAR

(a) Install the cushions and brackets on the painted portions of the stabilizer bar.

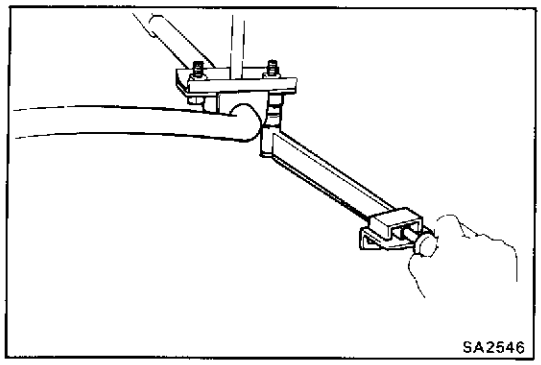

(b) Install both side the stabilizer links to the stabilizer bar with the bolts.

Torque: 185 kg-cm (13 ft-lb, 18 N·m)

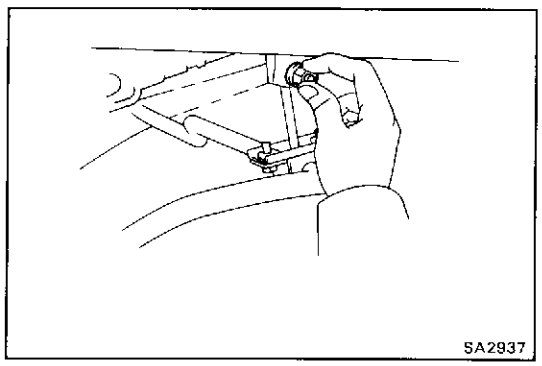

(c) Temporarily install both side the stabilizer bar links on both sides to the frame with the nuts.

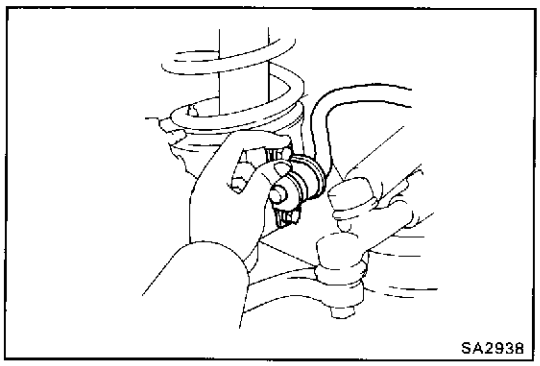

(d) Temporarily connect both side the stabilizer bar bracket to the axle housing with the bolts.

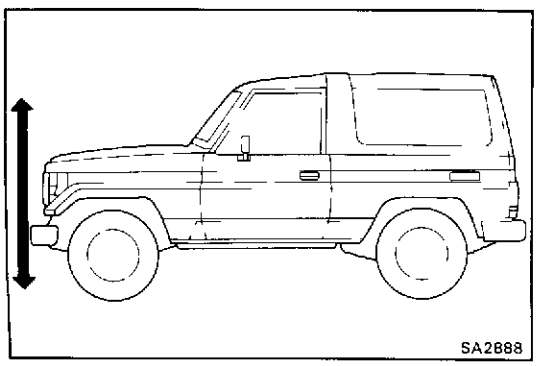

2. STABILIZE SUSPENSION

(a) Lower the vehicle.

(b) Bounce the vehicle up and down to stabilize the suspension

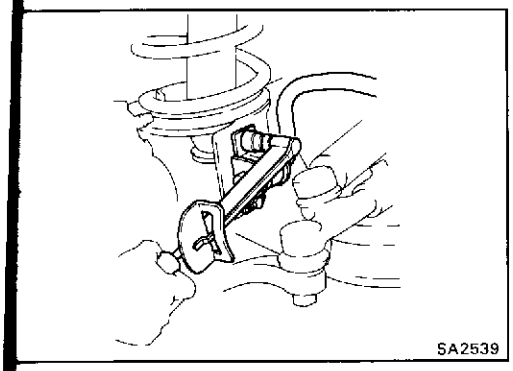
SA2539

3. **TORQUE BOLT AND NUT**

(a) Torque both side the bracket bolts.

Torque: 185 kg-cm (13 ft-lb, 18 N·m)

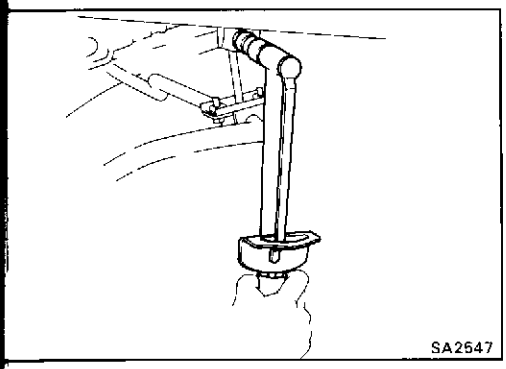
SA2547

(b) Torque both side the nuts.

Torque: 1,150 kg-cm (83 ft-lb, 113 N·m)

REAR AXLE SHAFT
(Semi-Floating Type)
COMPONENTS

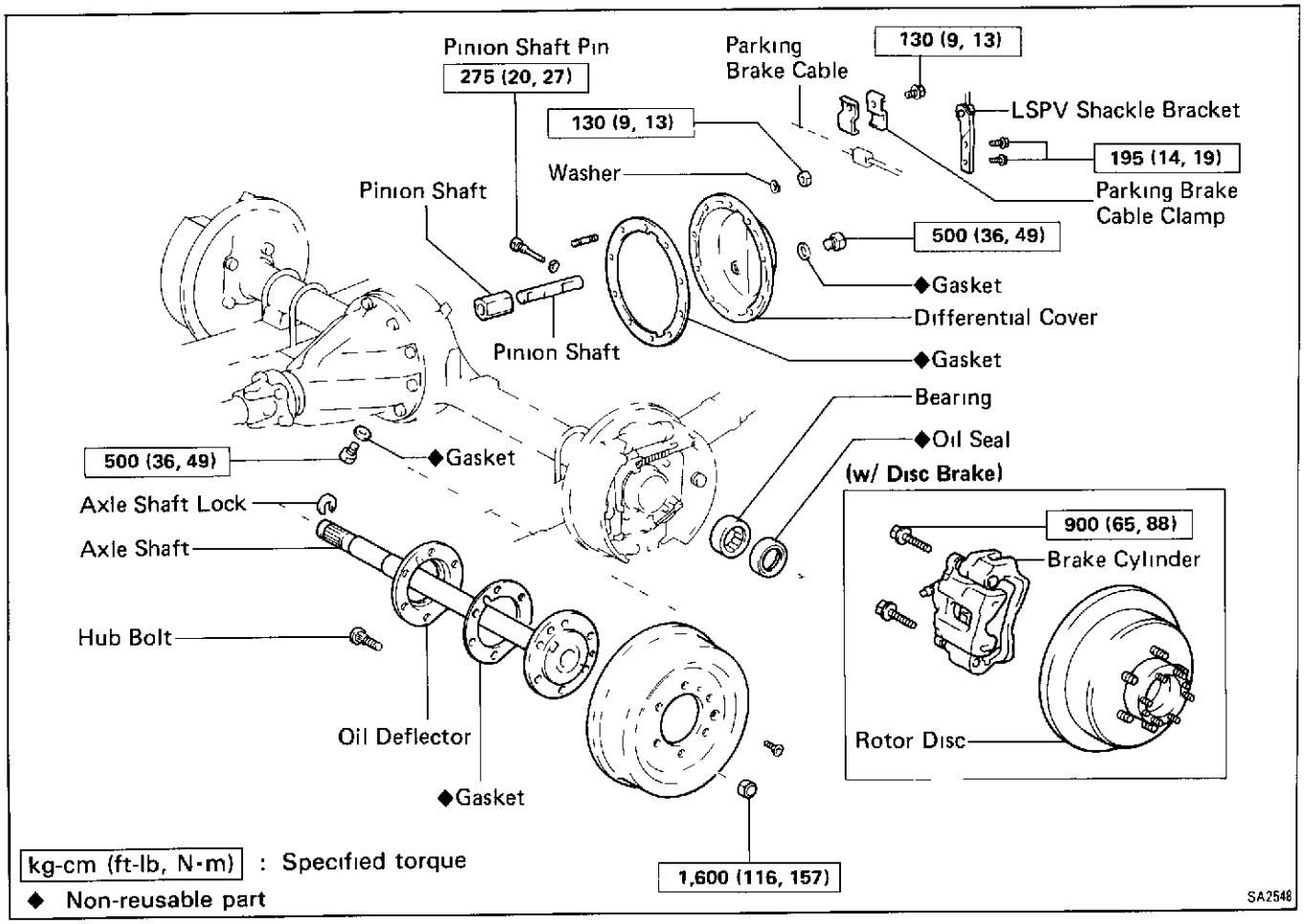

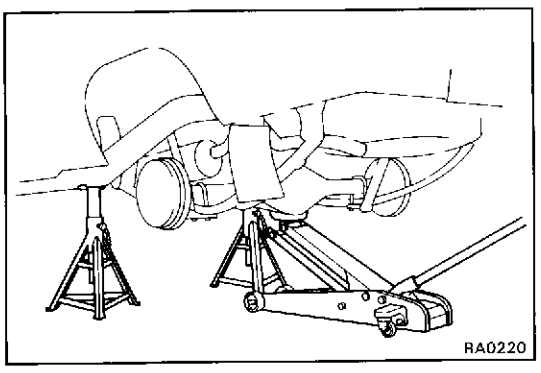

REMOVAL OF REAR AXLE SHAFT

1. JACK UP AND SUPPORT VEHICLE

(a) Jack up and support the frame on stands.

(b) Hold the rear axle housing with a jack

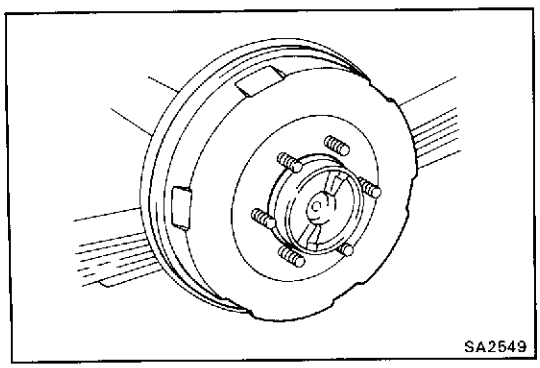

2. (w/ DRUM BRAKE)
REMOVE WHEEL AND BRAKE DRUM

(a) Remove the wheel

(b) Remove the screw from the drum.

(c) Remove the drum from the axle hub.

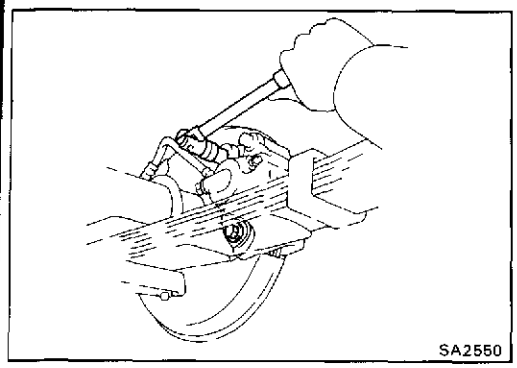
SA2550

3. (w/ DISC BRAKE)
REMOVE WHEEL AND ROTOR DISC

(a) Remove the two bolts and the brake cylinder with the torque plate from the rear axle carrier.

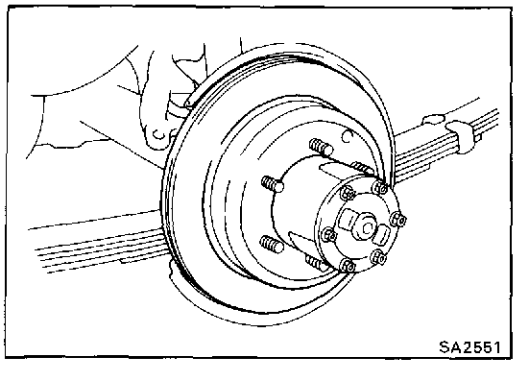
SA2551

(b) Remove the rotor disc from the axle shaft.

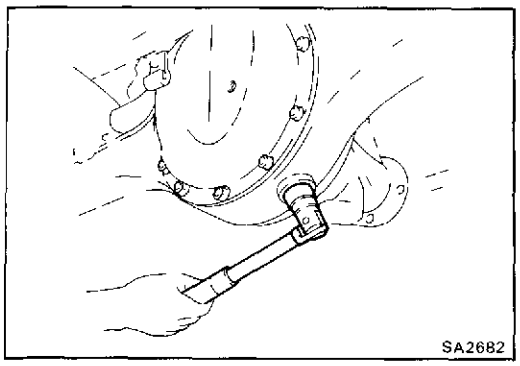
SA2682

4. REMOVE DRAIN PLUG AND DRAIN DIFFERENTIAL OIL

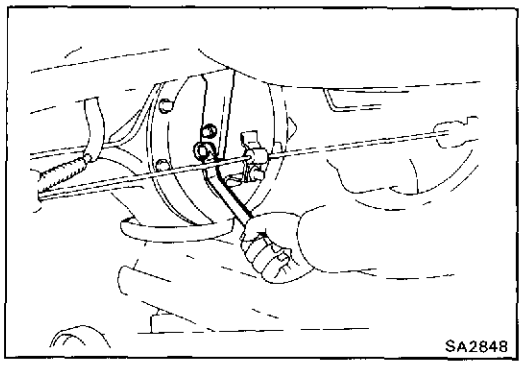
SA2848

5. REMOVE LSPV SHACKLE BRACKET

Remove two bolts and the shackle bracket from the differential cover.

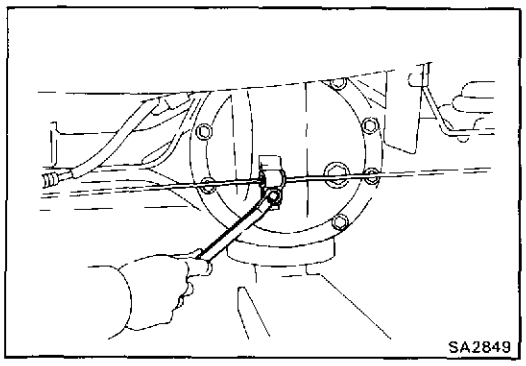
SA2849

6. REMOVE PARKING BRAKE CABLE CLAMP

Remove the bolt and the clamp from the differential cover.

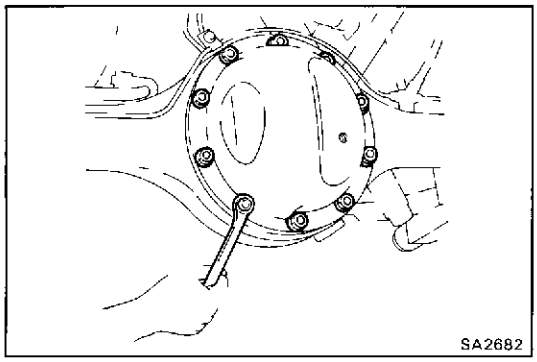
SA2682

7. REMOVE DIFFERENTIAL COVER

(a) Remove the ten nuts and washers.

(b) Remove the differential cover with the gasket.

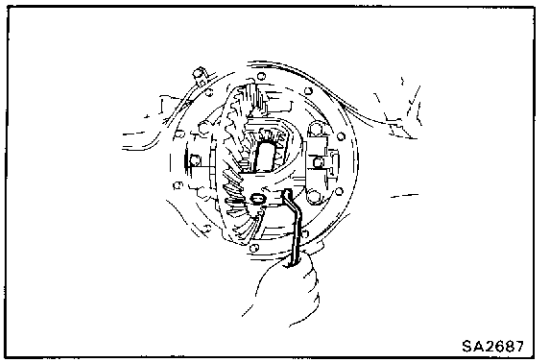
SA2687

8. REMOVE PINION SHAFT AND SPACER

(a) Remove the pinion shaft pin from the differential.

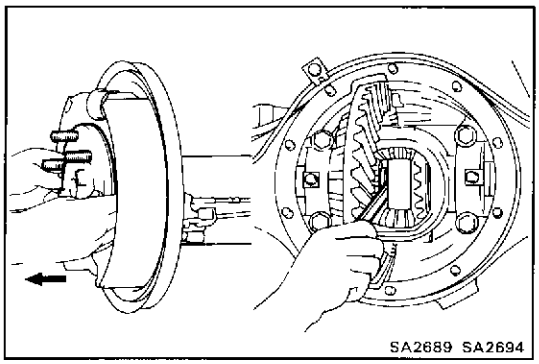
SA2689 SA2694

(b) Measure the thrust clearance between the axle shaft and spacer.

Maximum clearance: 0.5 mm (0.020 in.)

If necessary, select the spacer.

Spacer thickness

Thickness mm (in.)
29.0 (1.142)
29.4 (1.157)
29.8 (1.173)
30.2 (1.189)
30.6 (1.205)

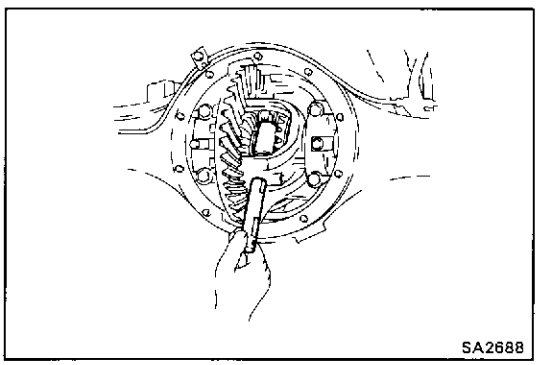
SA2688

(c) Remove the pinion shaft and spacer.

HINT. When the pinion shaft is removed, the pinion gear and washer will come off also.

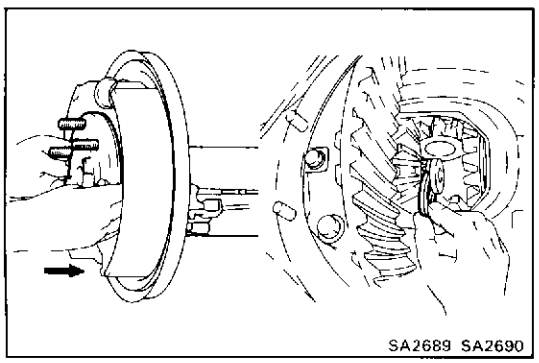
SA2689 SA2690

9. REMOVE AXLE SHAFT LOCK

Push the axle shaft to the differential side and remove the axle shaft lock.

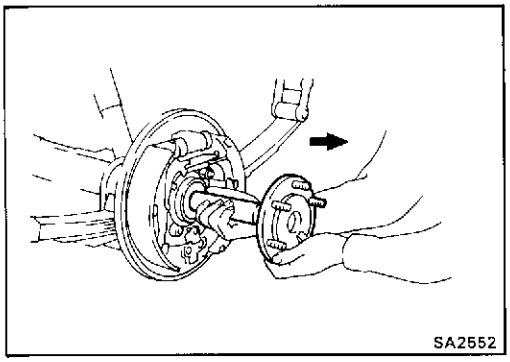

10. REMOVE AXLE SHAFT

NOTICE: When pulling out the axle shaft, be careful not to damage the oil seal.

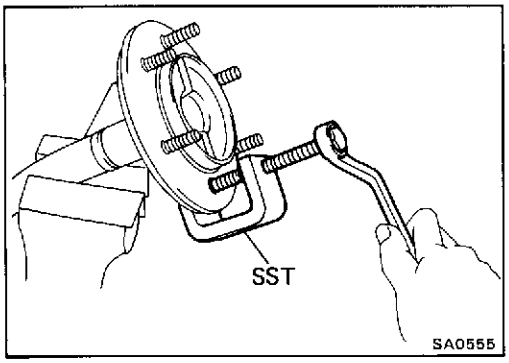

11. REMOVE HUB BOLT OIL DEFLECTOR

Using SST, remove the hub bolts, oil deflector and the gasket.

SST 09650-17011

INSPECTION AND REPLACEMENT OF REAR AXLE SHAFT COMPONENTS

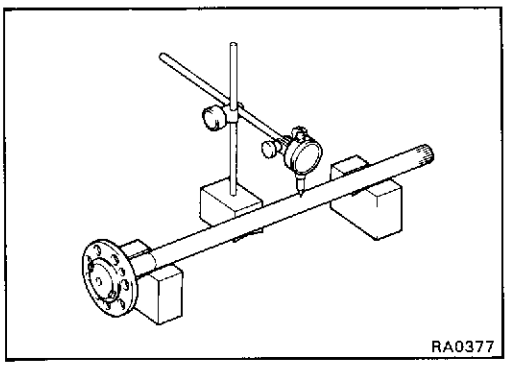

1. INSPECT REAR AXLE SHAFT

(a) Check for wear or damage.

(b) Check the runout of axle shaft.

Maximum runout: 0.8 mm (0.031 in.)

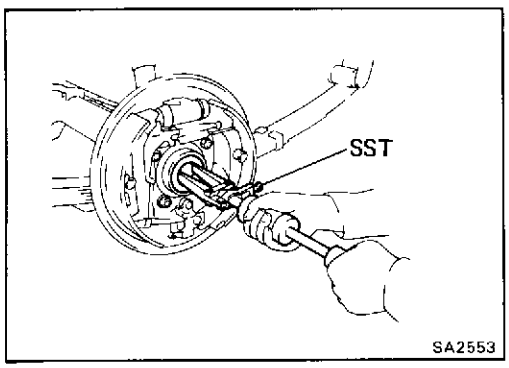

2. INSPECT OIL SEAL AND BEARING FOR WEAR OR DAMAGE

If the oil seal and bearing is damaged or worn, replace the oil seal and bearing.

3. REPLACE OIL SEAL AND BEARING

(a) Using SST, remove the oil seal.

SST 09308-00010

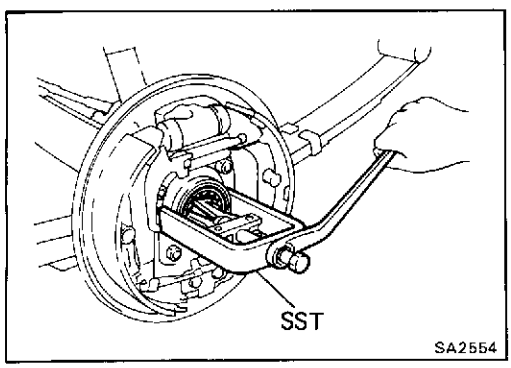

(b) Using SST, remove the bearing.

SST 09514-35011

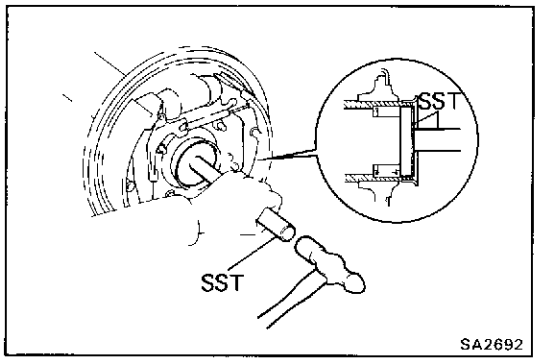

(c) Apply MP grease to the bearing.

(d) Using SST, drive in a new bearing.

SST 09608-20012 (09608-03020, 09608-03060)

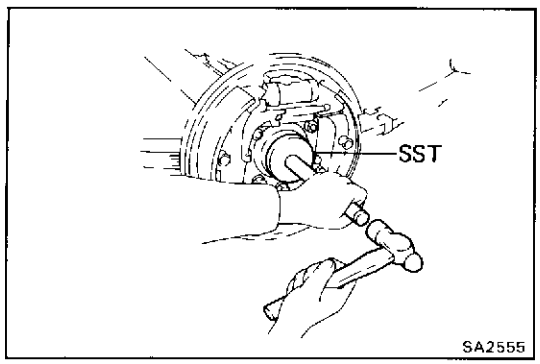

(e) Using SST, drive in a new oil seal.

SST 09608-20012 (09608-03020, 09608-03060)

(f) Apply MP grease to the oil seal lip.

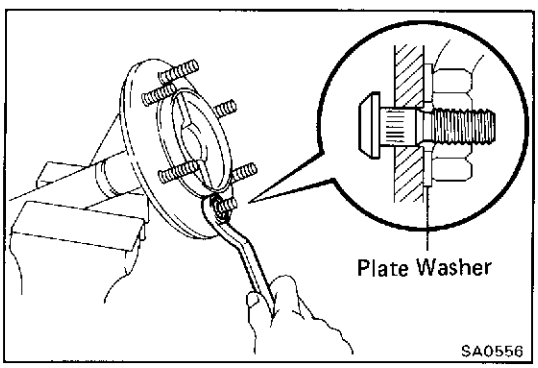

INSTALLATION OF REAR AXLE SHAFT

(See page SA-110)

1. INSTALL OIL DEFLECTOR AND HUB BOLT

(a) Install a new gasket and the oil deflector.

(b) Install the plate washer on the hub bolt as shown in the illustration then tighten the nut to install the hub bolts.

(c) Remove the nut.

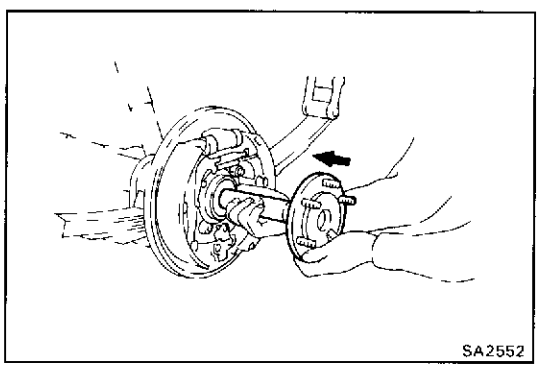

2. INSTALL REAR AXLE SHAFT IN AXLE HOUSING

Insert the axle shaft into the housing.

NOTICE: When inserting the axle shaft, be careful not to damage the oil seal.

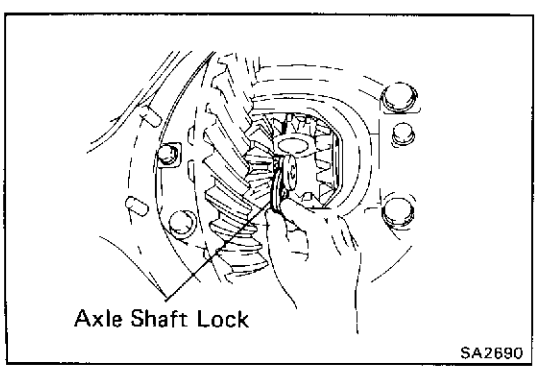

3. INSTALL AXLE SHAFT LOCK

(a) Install the axle shaft lock to axle shaft.

(b) Pull the axle shaft fully toward the outer side of the vehicle.

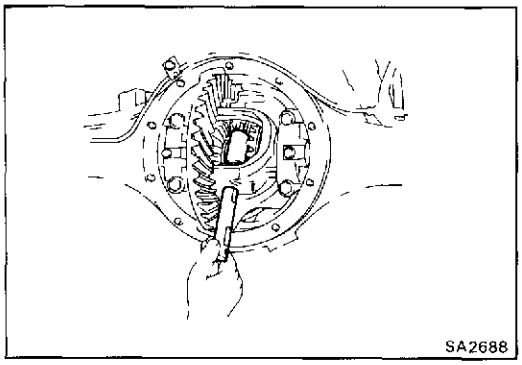
SA2688

4. INSTALL PINION SHAFT AND PINION SHAFT SPACER

(a) Install the spacer and the pinion shaft to the differential.

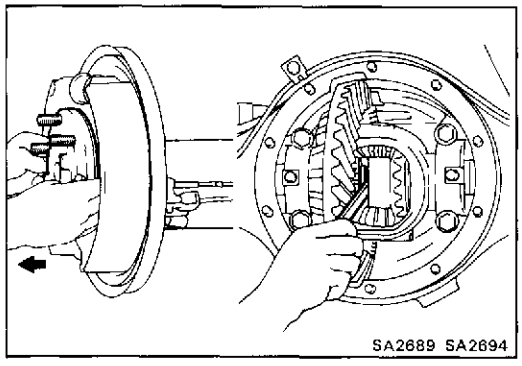
SA2689 SA2694

(b) Pull the axle shaft to outside.

(c) Measure the thrust clearance between the axle shaft and spacer.

Maximum clearance: 0.5 mm (0.020 in.)

If necessary, select the spacer.

Spacer thickness

Thickness	mm (in.)
29 0 (1.142)	
29.4 (1 157)	
29.8 (1 173)	
30 2 (1 189)	
30.6 (1 205)	

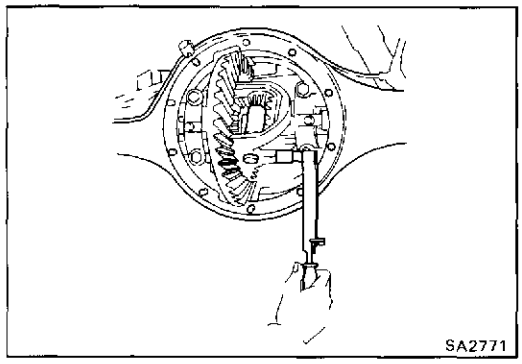
SA2771

(d) Install the pinion shaft pin.

Torque: 275 kg-cm (20 ft-lb, 27 N·m)

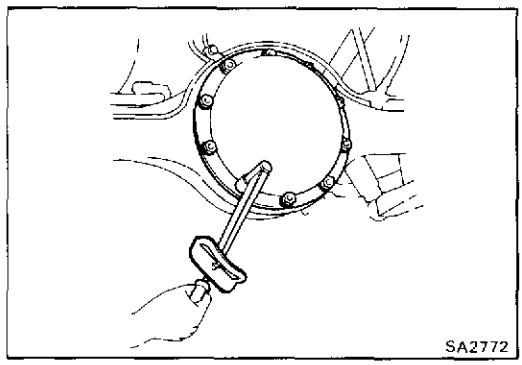
SA2772

5. INSTALL DIFFERENTIAL COVER

(a) Install a new gasket and differential cover to the axle housing

(b) Install the ten washer and nuts.

Torque: 130 kg-cm (9 ft-lb, 13 N·m)

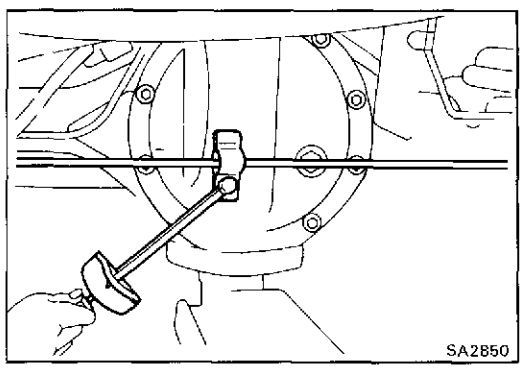
SA2850

6. INSTALL PARKING BRAKE CABLE CLAMP

Install the clamp of parking brake cable to the differential cover with the bolt

Torque: 130 kg-cm (9 ft-lb, 13 N·m)

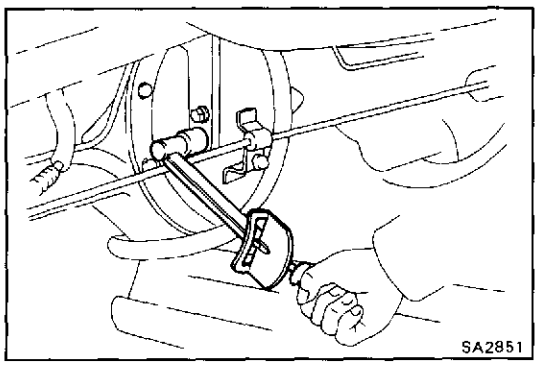

7. INSTALL LSPV SHACKLE BRACKET

Install the shackle bracket to differential cover with the two bolts.

Torque: 195 kg-cm (14 ft-lb, 19 N·m)

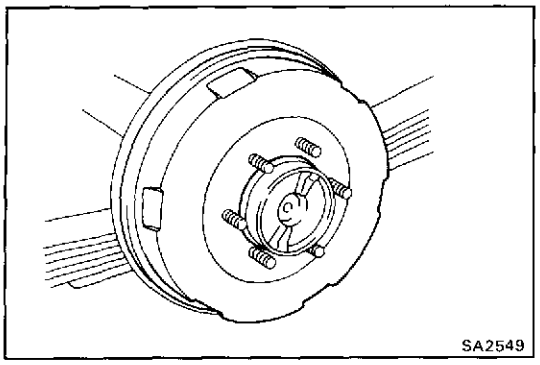

8. (w/ DRUM BRAKE)
INSTALL BRAKE DRUM AND WHEEL

(a) Install the drum to the axle shaft.

(b) Install the screw to the drum.

(c) Install the wheel.

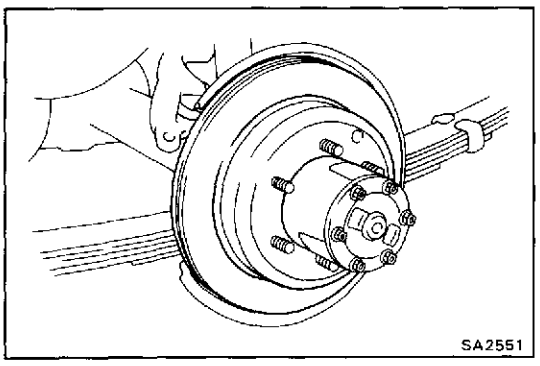

9. (w/ DISC BRAKE)
INSTALL ROTOR DISC AND WHEEL

(a) Install the rotor disc to the axle shaft.

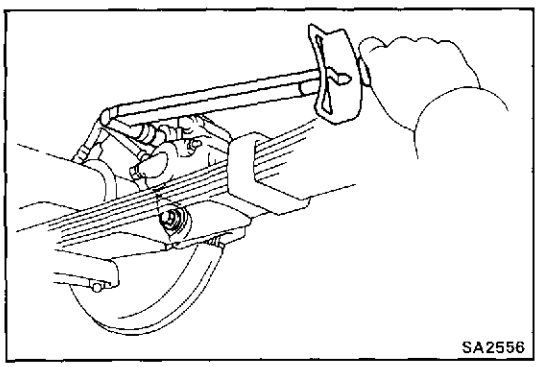

(b) Install the brake cylinder with the torque plate to the rear axle carrier with the two bolts

Torque: 900 kg-cm (65 ft-lb, 88 N·m)

(c) Install the wheel.

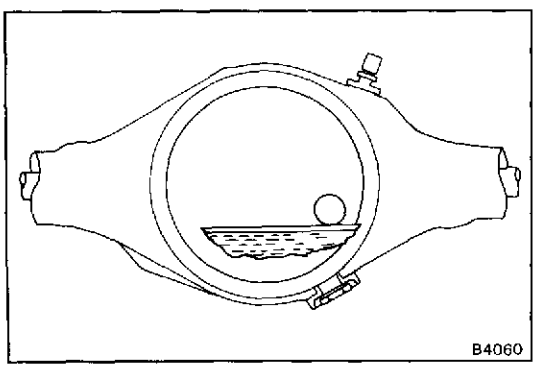

10. FILL DIFFERENTIAL WITH GEAR OIL

Oil type: API GL-5

Viscosity: Above −18°C (0°F) SAE 90
Below −18°C (0°F) SAE 80W or 80W-90

Capacity: 2.5 liters (2.6 US qts, 2.2 Imp. qts)

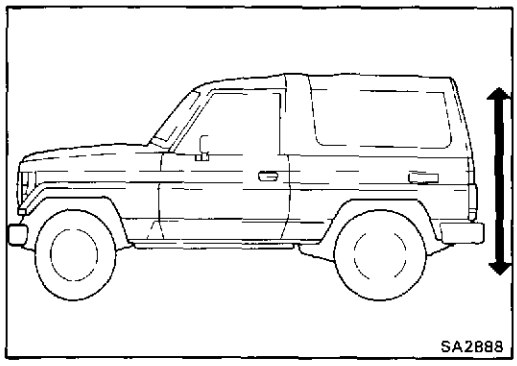

11. LOWER VEHICLE

(a) Lower the vehicle

(b) Bounce the vehicle up and down to stabilize the suspension

REPLACEMENT OF REAR HUB BOLT

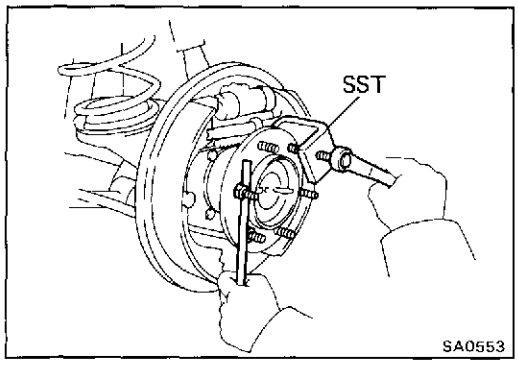

1. JACK UP SUPPORT VEHICLE

2. REMOVE REAR WHEEL AND BRAKE DRUM OR DISC ROTOR

3. REMOVE HUB BOLT

Using SST, remove the hub bolts

SST 09650-17011

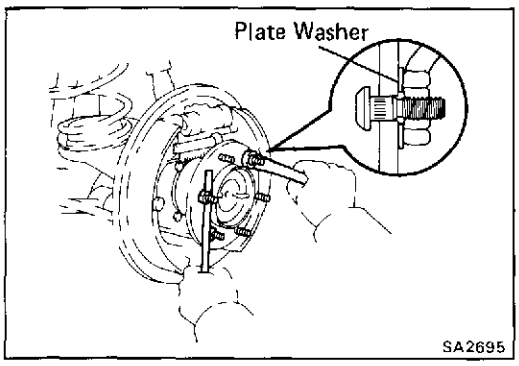

4. INSTALL HUB BOLT

Hold the axle shaft, using washers and nuts, install new hub bolts.

5. INSTALL BRAKE DRUM OR DISC ROTOR AND REAR WHEEL

6. LOWER VEHICLE

REAR DIFFERENTIAL / 8 INCH TYPE

On-Vehicle Replacement of Front Oil Seal

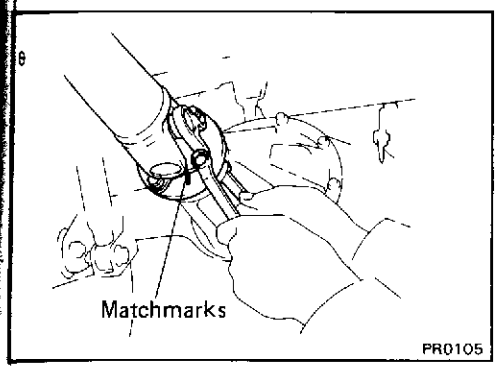

1. **DISCONNECT REAR PROPELLER SHAFT**
   (a) Place matchmarks on the flanges.
   (b) Remove the four bolts and nuts.

2. **REMOVE COMPANION FLANGE**
   (See step 2 on page SA-52)

3. **REMOVE OIL SEAL AND OIL SLINGER**
   (See step 3 on page SA-52)

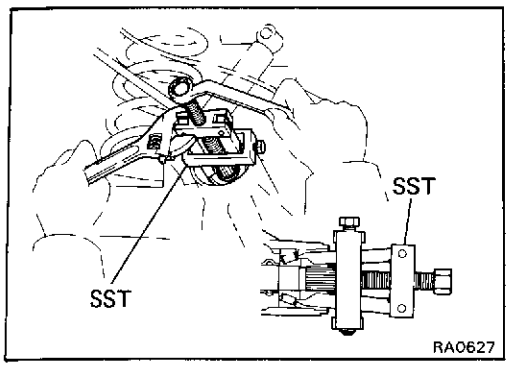

4. **REMOVE FRONT BEARING AND BEARING SPACER**
   (a) Using SST, remove the front bearing from the drive pinion.
   SST 09556-22010
   (b) Remove the bearing spacer

5. **INSTALL NEW BEARING SPACER AND FRONT BEARING**

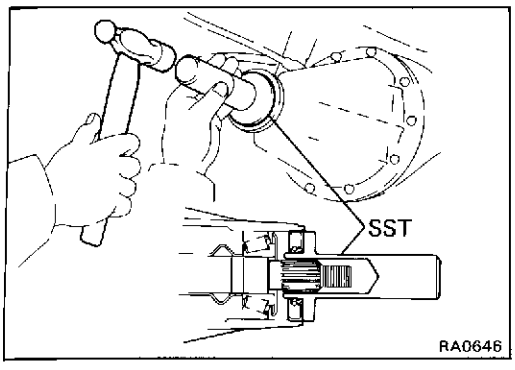

6. **INSTALL OIL SLINGER AND NEW OIL SEAL**
   (a) Install the oil slinger facing as shown.
   (b) Using SST, drive in a new oil seal as shown.
   SST 09554-30011 (w/o Differential Lock)
   09214-76011 (w/ Differential Lock)
   Oil seal drive in depth: 1.0 mm (0.039 in.)
   (c) Apply MP grease to the oil seal lip.

7. **INSTALL COMPANION FLANGE**
(See step 13 on page SA-54)

8. **CHECK DRIVE PINION PRELOAD**
(See step 14 on page SA-54)

9. **STAKE DRIVE PINION NUT**

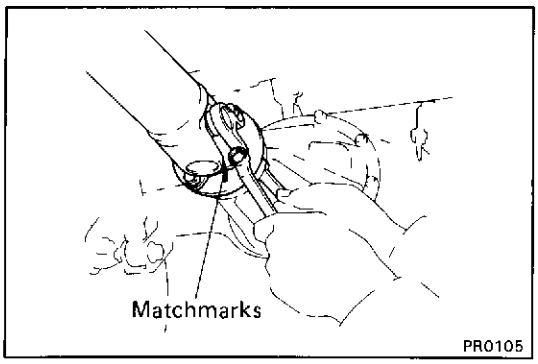

10. **CONNECT REAR PROPELLER SHAFT**

(a) Align matchmarks on the flanges and connect the flanges with four bolts, spring washers and nuts.

(b) Torque the bolts and nuts.

Torque: 750 kg-cm (54 ft-lb, 74 N·m)

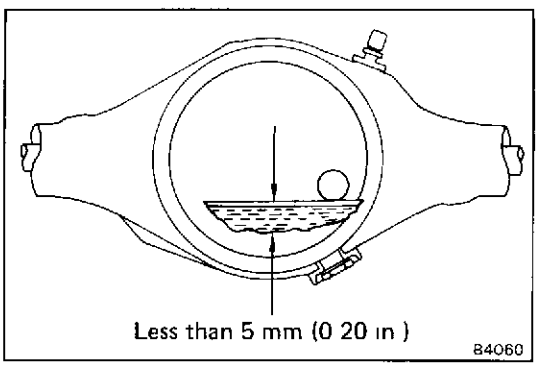

11. **CHECK DIFFERENTIAL OIL LEVEL**

Fill with hypoid gear oil if necessary.

Oil type:
w/o LSD API GL-5
w/ LSD API GL-5 for LSD

Recommended oil viscosity:
Above — 18°C (0°F) SAE 90
Below — 18°C (0°F) SAE 80W or 80W-90

Capacity: 1.85 liters (2.0 US qts, 1.6 Imp. qts)

Removal and Installation of Rear Differential

COMPONENTS

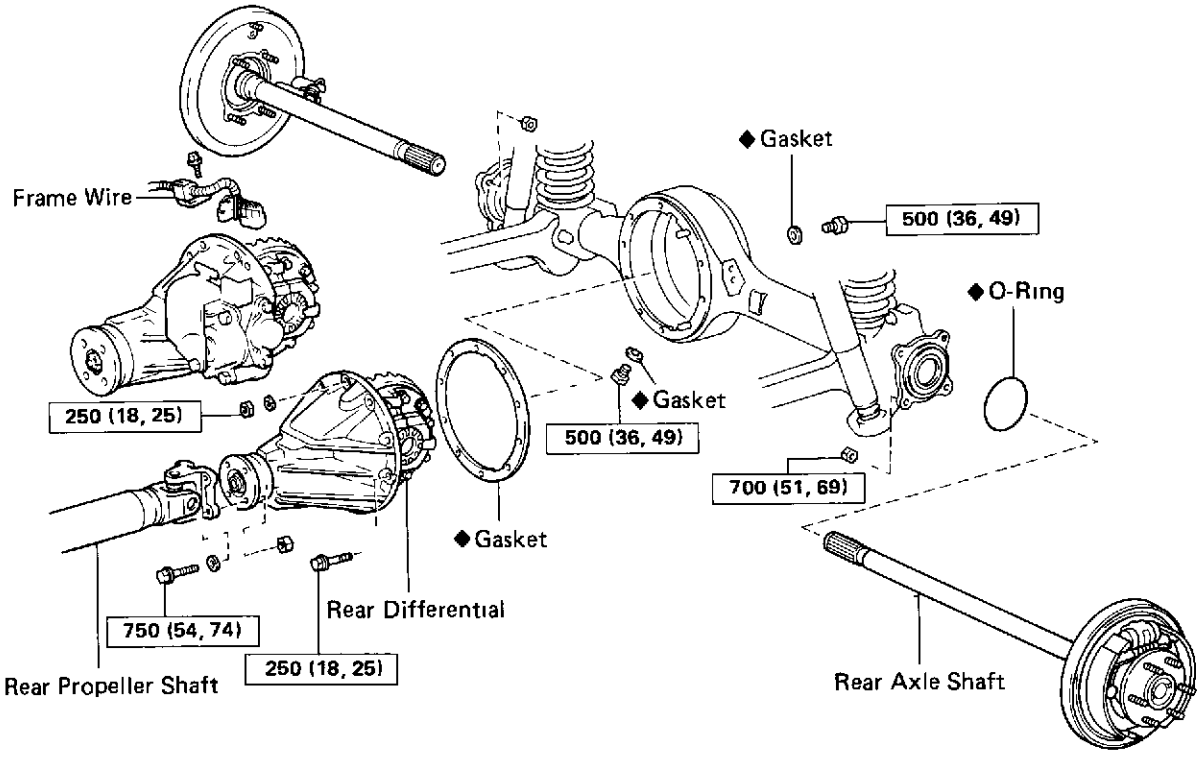

kg-cm (ft-lb, N·m) Specified torque
◆ Non-reusable part

SA2412

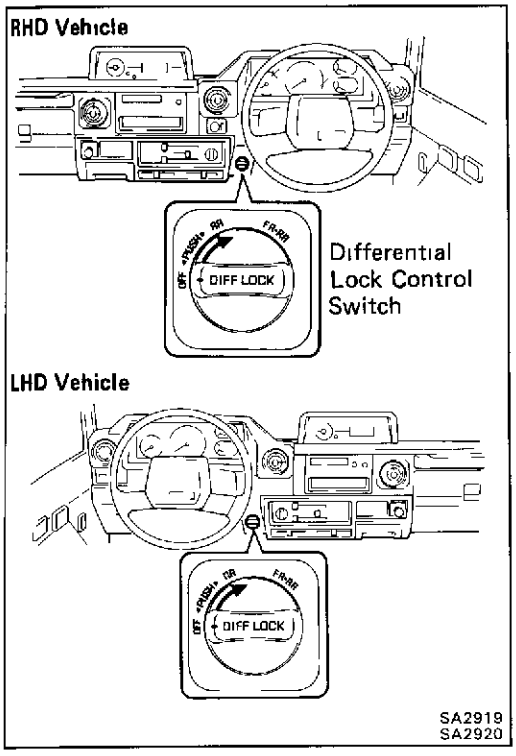

SA2919
SA2920

REMOVAL OF REAR DIFFERENTIAL

1. **(w/ DIFFERENTIAL LOCK)**
   SHIFT REAR DIFFERENTIAL LOCK
   (a) Turn the ignition switch to ON position.
   (b) Put on the 4WD switch.
   (c) Turn the differential lock control switch to RR position, and lock the rear differential.

   HINT: Turning round the tires, check the tires, check they are the differential lock condition.

   (d) Disconnect the cable from the negative terminal of the battery.

2. **REMOVE DRAIN PLUG AND DRAIN DIFFERENTIAL OIL**

3. **REMOVE REAR AXLE SHAFTS**
(See steps 1 to 10 on pages SA-110 to 113)

4. **DISCONNECT REAR PROPELLER SHAFT**
(See step 1 on page SA-127)

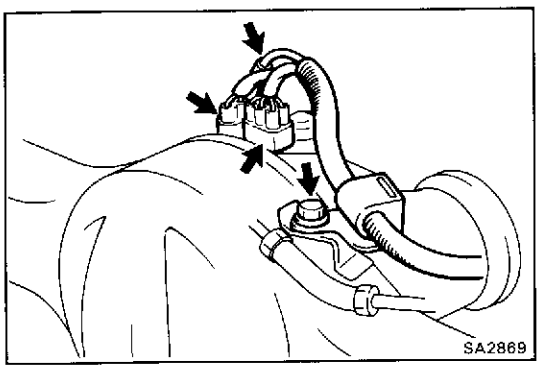

5. **(w/ DIFFERENTIAL LOCK)**
DISCONNECT FRAME WIRE

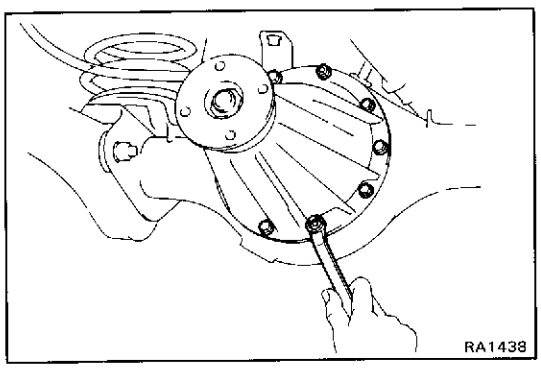

6. **REMOVE DIFFERENTIAL CARRIER ASSEMBLY**

NOTICE: Do not scratch the installation surface.

INSTALLATION OF REAR DIFFERENTIAL

(See page SA-129)

1. **(w/ DIFFERENTIAL LOCK)**
CHECK DIFFENTIAL LOCK OPERATION

(a) Connect the connector of the actuator to the connector of the vehicle side, and check that the sleeve is on work with switching over the differential control switch.

(b) After checking the differential, keep it in a lock state

2. **INSTALL A NEW GASKET**

3. **INSTALL DIFFERENTIAL CARRIER ASSEMBLY**

Install the differential carrier assembly in the axle and install the two nuts and eights bolts Torque the nuts and bolts.

Torque: 250 kg-cm (18 ft-lb, 25 N·m)

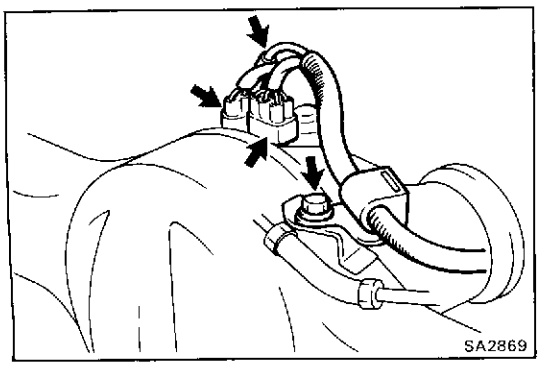

4. **(w/ DIFFERENTIAL LOCK)**
CONNECT FRAME WIRE

HINT.

- When connecting the bleeder tube of the harness side to the hose of the actuator side, its depth of insertion is approx. 15 mm (0.59 in).
- Take care that water or the equivalent shall not adhere to the connectors and hose

5. **CONNECT REAR PROPELLER SHAFT**
(See step 10 on page SA-128)

6. **INSTALL REAR AXLE SHAFTS**
(See steps 2 to 9 on pages SA-114 to 117)

7. **INSTALL DRAIN PLUG**

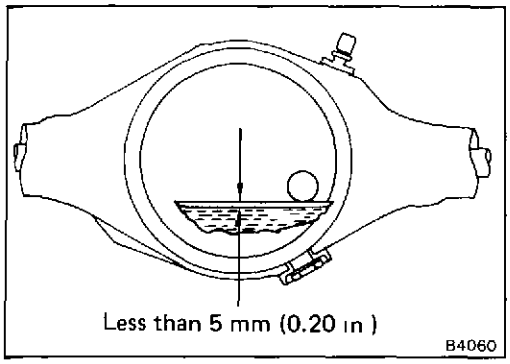

8. **FILL DIFFERENTIAL WITH GEAR OIL**

Fill with hypoid gear oil.

Oil type:
w/o LSD API GL-5
w/ LSD API GL-5 for LSD

Viscosity:
Above — 18°C (0°F) SAE 90
Below — 18°C (0°F) SAE 80W or 80W-90

Capacity: 1.85 liters (2.0 US qts, 1.6 Imp. qts)

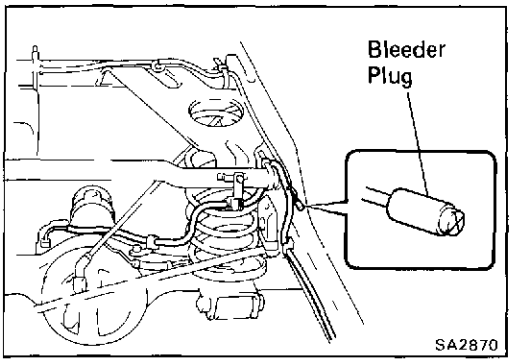

9. **(w/ DIFFERENTIAL LOCK)**
CHECK DIFFERENTIAL LOCK OPERATION
(See page SA-184)

10. **(w/ DIFFERENTIAL LOCK)**
CHECK BLEEDER PLUG

Check that the bleeder plug at the tip of the bleeder tube (above the right side frame) is not damaged or worn.

Differential Carrier

COMPONENTS

4 Pinion (w/o Differential Lock) and LSD Types

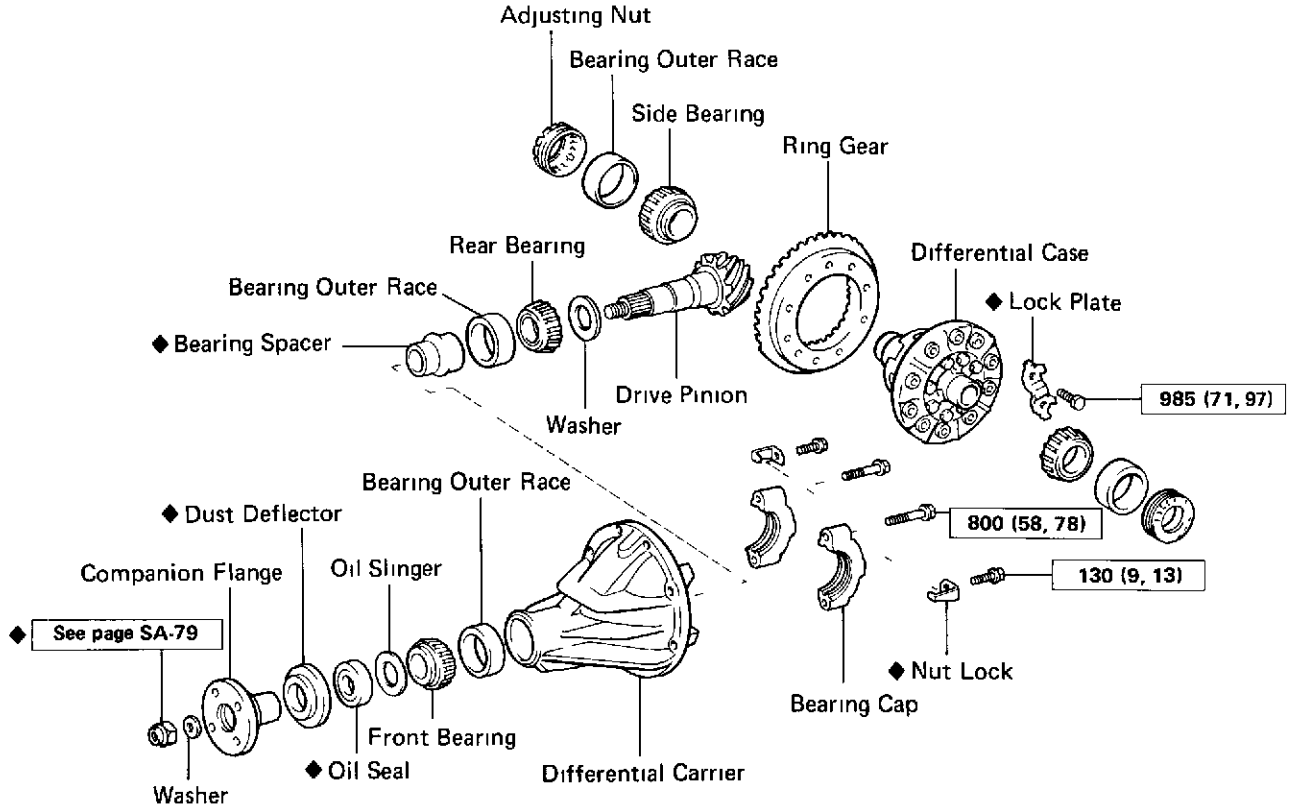

w/ Differential Lock

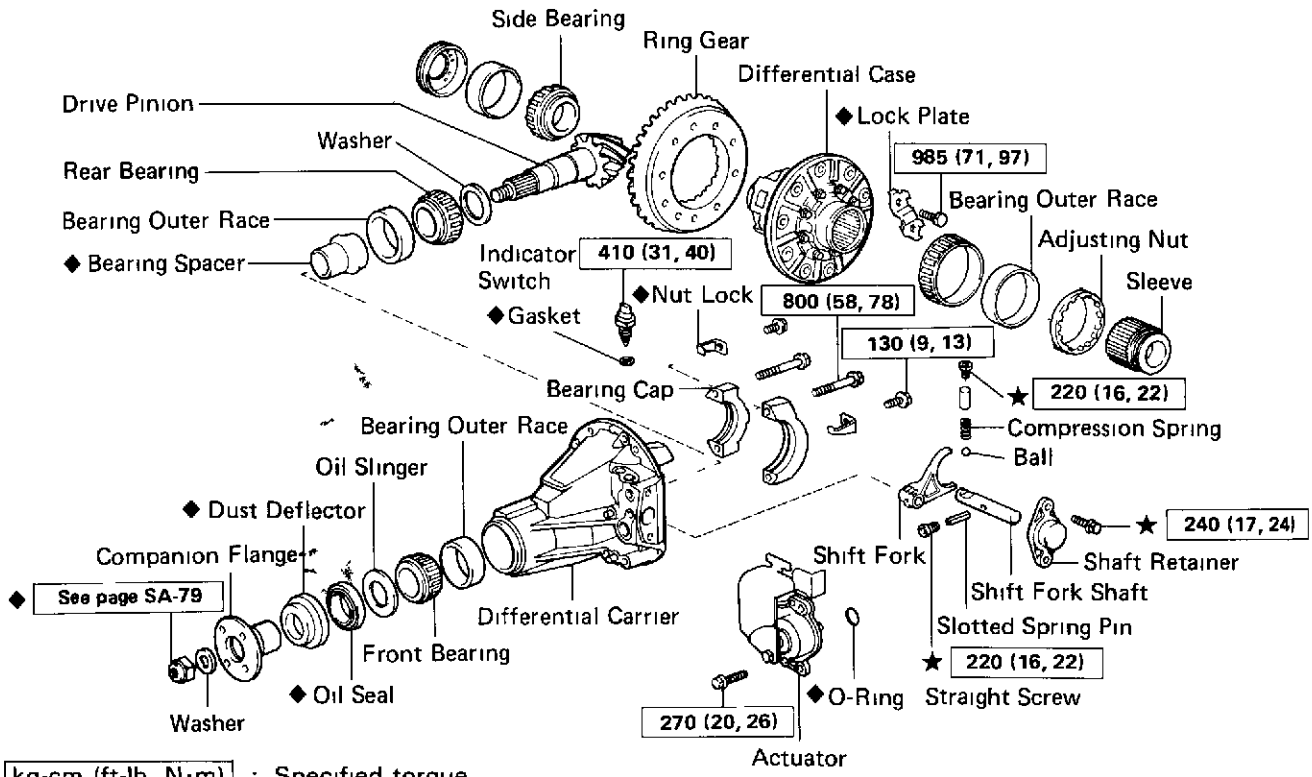

kg-cm (ft-lb, N·m) : Specified torque

◆ Non-reusable part

★ Precoated part

SA2583
SA2582

INSPECTION OF DIFFERENTIAL CARRIER
(See pages SA-63, 64)

DISASSEMBLY OF DIFFERENTIAL CARRIER
(See pages SA-65 to 70 and 132)

INSPECTION AND REPLACEMENT OF DIFFERENTIAL COMPONENTS
(See page SA-70)

ASSEMBLY OF DIFFERENTIAL CARRIER
(See pages SA-71 to 83 and 132)

Differential Case (4 Pinion Type)

COMPONENTS (w/o DIFFERENTIAL LOCK)

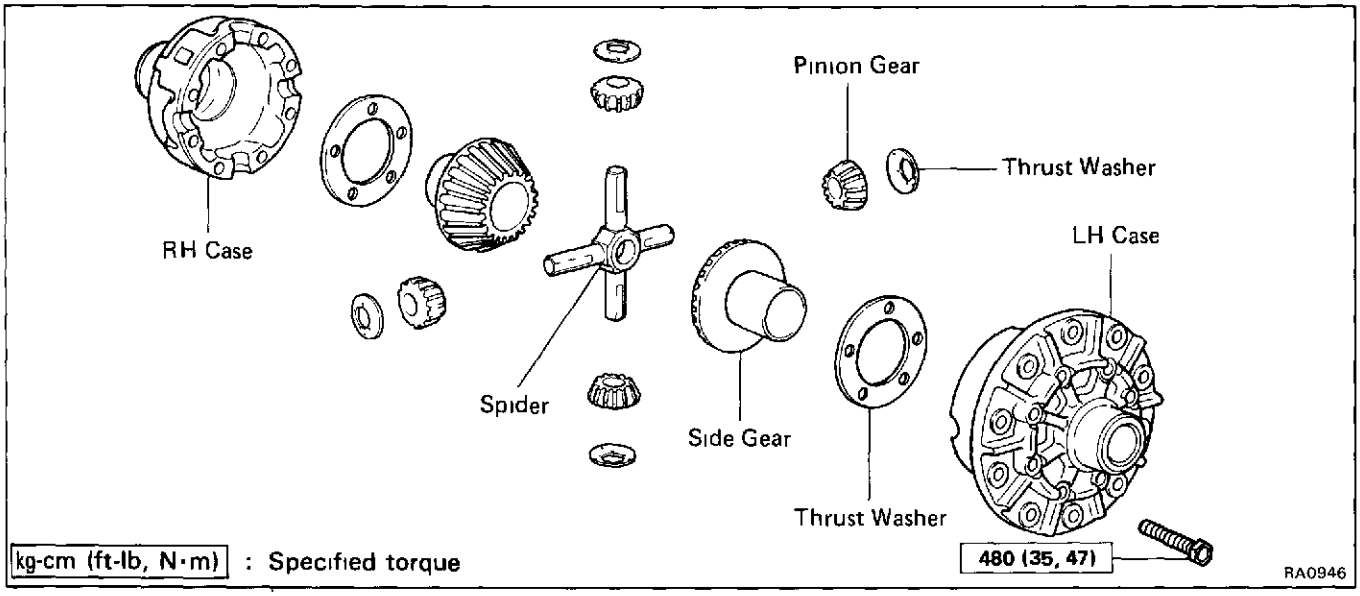

COMPONENTS (w/ DIFFERENTIAL LOCK)
(See page SA-86)

REMOVAL OF DIFFERENTIAL CASE

1. REMOVE DIFFERENTIAL (See page SA-129)
2. REMOVE DIFFERENTIAL CASE FROM CARRIER (See page SA-132)

DISASSEMBLY OF DIFFERENTIAL CASE
(See page SA-86)

ASSEMBLY OF DIFFERENTIAL CASE
(See page SA-87)

INSTALLATION OF DIFFERENTIAL

1. INSTALL DIFFERENTIAL CASE IN CARRIER (See page SA-132)
2. INSTALL DIFFERENTIAL (See page SA-129)

Differential Case (Limited Slip Differential)

COMPONENTS

HINT: *These thrust washers (thicker than the others) are used only by the manufacturer to adjust the pinion gear backlash and are not available as spare parts. For after-sales service, when replacing the thrust washers, replace them with a set of ten of the thinner thrust washers and adjust the pinion gear backlash using separately available adjusting shims.

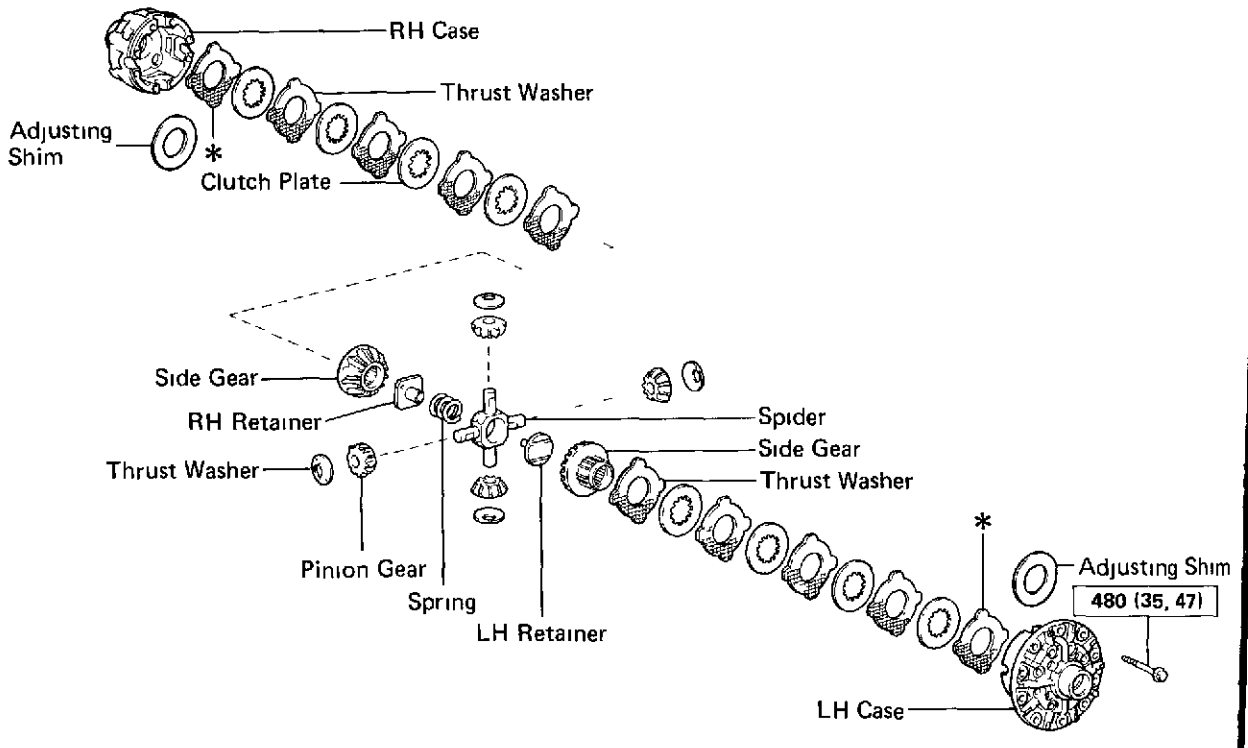

kg-cm (ft-lb, N·m) : Specified torque

D4

REMOVAL OF DIFFERENTIAL CASE

1. **REMOVE DIFFERENTIAL (See page SA-129)**
2. **REMOVE DIFFERENTIAL CASE FROM CARRIER (See page SA-132)**

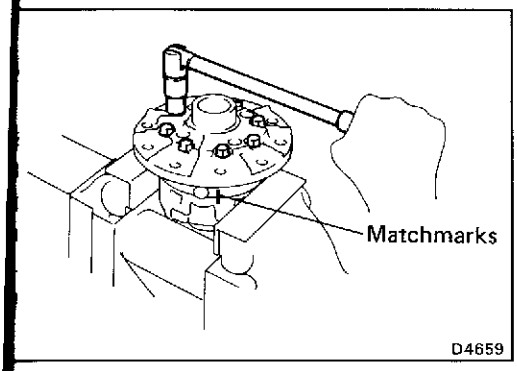

DISASSEMBLY OF DIFFERENTIAL CASE

(See page SA-134)

1. DISASSEMBLE DIFFERENTIAL CASE

(a) Place matchmarks on the LH and RH cases.

(b) Remove the eight bolts uniformly, little at a time.

(c) Using a plastic hammer, separate the LH and RH cases.

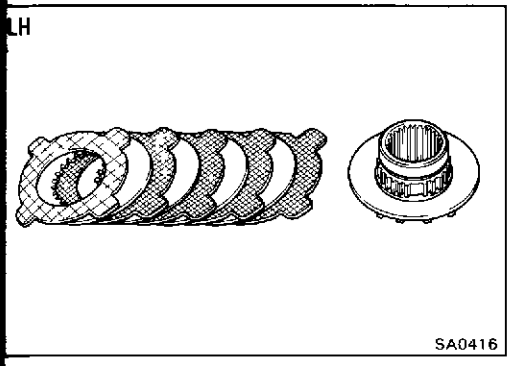

2. REMOVE FOLLOWING PARTS FROM CASE:

HINT: Keep the disassembled parts in order.

(a) Remove the following parts from LH case:

(1) Side gear

(2) Side gear thrust washer (5 pieces)

(3) Clutch plate (4 pieces)

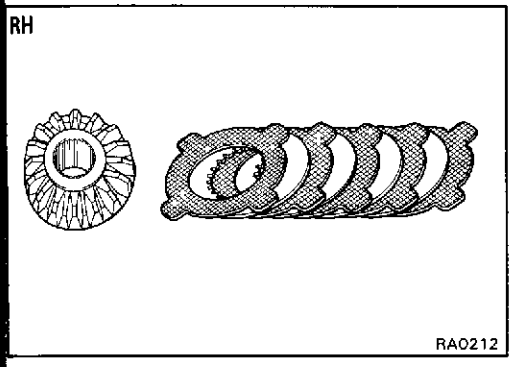

(b) Remove the following parts from RH case:

(1) Spring LH retainer and two springs

(2) Spider with pinion gear

(3) Spring RH retainer

(4) Side gear

(5) Side gear thrust washer (5 pieces)

(6) Clutch plate (4 pieces)

INSPECTION OF COMPONENTS

1. REPLACE PARTS THAT ARE DAMAGED OR WORN

HINT. If replacing the side gear, also replace the thrust washer contacting it.

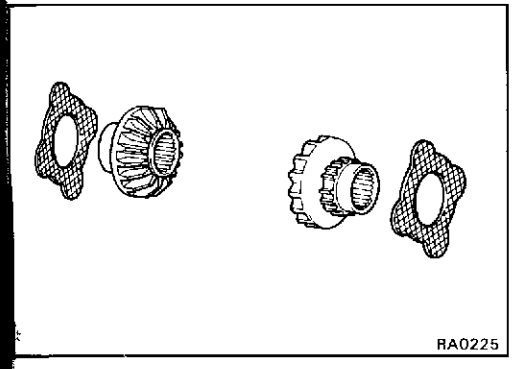

2. INSPECT THRUST WASHERS FOR WEAR OR DAMAGE

Check that the contact surface of the thrust washer is even and that no bare metal is showing.

(For reference)Thickness limit: 1.74 mm (0.0685 in.)

If necessary replace the thrust washers

HINT: If replacing the thrust washer, also replace the clutch plate contacting with it.

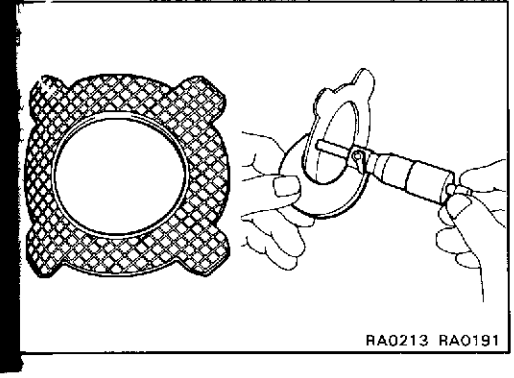

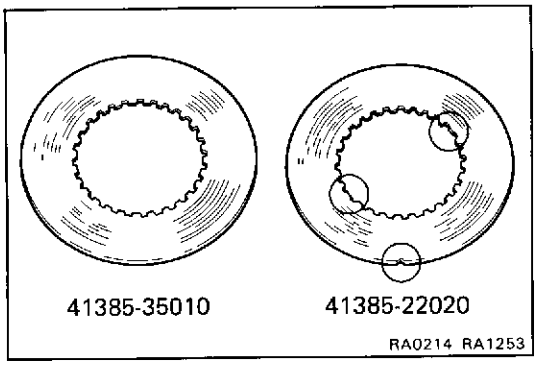

3. INSPECT CLUTCH PLATE FOR WEAR OR DAMAGED

Check see that there is no abnormal wear.If necessary, replace the clutch plate.

HINT: As shown in the illustration, there are two types of clutch plates The clutch plate in differential will either have a notched portion on its rim or teeth missing at two places on the inner ring (right side), or a clutch plate with no missing teeth or notched portion (left side). Therefore, when replacing the clutch plates never mix these two types inside the same differential

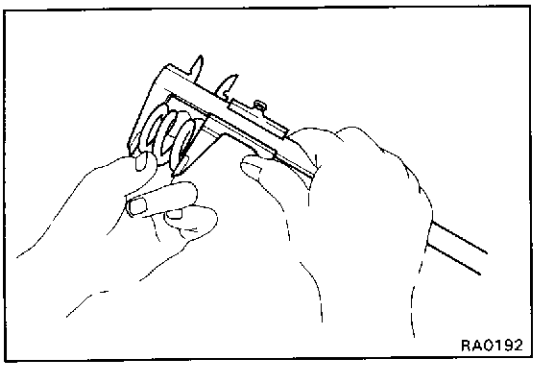

4. INSPECT SPRING FREE LENGTH

Measure the free length of the spring.

Limit: Length 31.3 mm (1.232 in.)

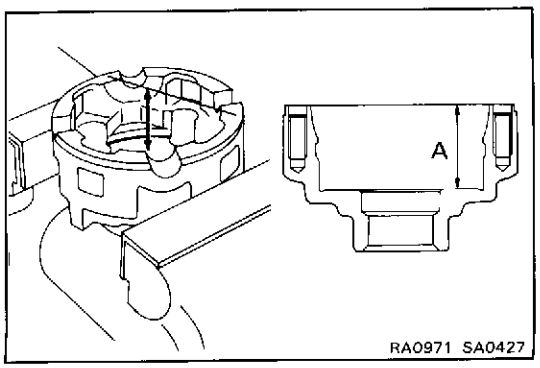

SELECT ADJUSTING SHIM

1. MEASURE RH CASE

Measure the RH case as shown in the figure.

"A" = Case dimension.

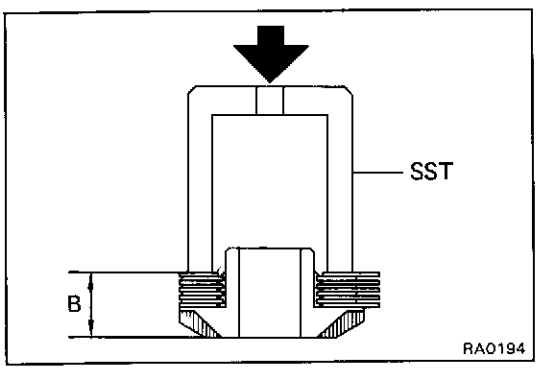

2. MEASURE SIDE GEAR, THRUST WASHER AND CLUTCH PLATE

(a) Assemble the side gear, thrust washers and clutch plates on the side gear.

HINT. Do not assemble the adjusting shims.

(b) Using SST to press down the thrust washers and clutch plates with about 10 kg (22 lb) of pressure, measure dimension "B".

SST 09726-35010

TOTAL SHIM THICKNESS C:

"C" = "A" − "B" − 16.15 mm (0.6358 in.)

(c) Refering to the selection table on the next page select the proper adjusting shims.

HINT: The thrust washer attached to the outside of the side gear is marked from A to M according to thickness. This part is used only during assembly at the factory and therefore is neither a supply part, nor does it have a part number

During repair, install the selected adjusting shim (marked A through E) between the outermost thrust washer and case.

Adjusting shim thickness mm (in.)

Mark	Thickness	Mark	Thickness
A	0.15 (0.0059)	D	0.30 (0 0118)
B	0.20 (0.0079)	E	0 35 (0 0138)
C	0.25 (0 0098)		

Adjusting shim selection table mm (in)

B Dimension	A Dimension 45 00 00 (1 7717)	.01 (1 7720)	.02 (1.7724)	.03 (1.7728)	.04 (1.7732)	.05 (1 7736)	06 (1 7740)	.07 (1 7744)
28 10 (1 1063)							Ⓒ + Ⓒ + Ⓓ	
.12 (1.1071)								
.14 (1 1079)					Ⓒ + Ⓒ + Ⓒ			
16 (1 1087)								
.18 (1.1094)					Ⓔ + Ⓔ			
.20 (1.1102)								
22 (1 1110)					Ⓓ + Ⓔ			
24 (1 1118)								
26 (1.1126)								
28 (1.1134)					Ⓓ + Ⓓ			
.30 (1 1142)								
.32 (1 1150)					Ⓒ + Ⓓ			
.34 (1 1157)								
.36 (1.1165)								
38 (1 1173)					Ⓒ + Ⓒ			
40 (1 1181)								
.42 (1 1189)					Ⓑ + Ⓒ			
.44 (1 1197)								
.46 (1.1205)								
.48 (1.1213)					Ⓑ + Ⓑ			
.50 (1 1220)								
52 (1.1228)					Ⓔ			
54 (1.1236)								
.56 (1.1244)								
.58 (1.1252)					Ⓓ			
.60 (1.1260)								
.62 (1.1268)				Ⓒ				
.64 (1.1276)								
66 (1.1283)			Ⓑ					
68 (1.1291)	Ⓐ							
.70 (1.1299)								

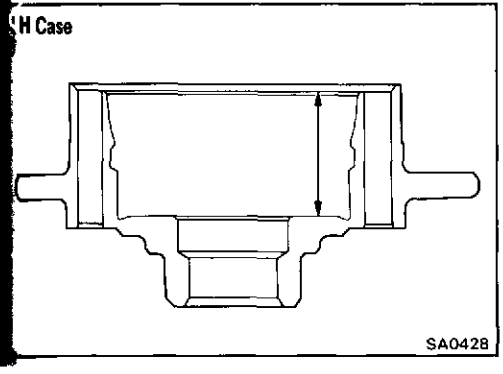

3. SELECT ADJUSTING SHIMS FOR LH CASE IN SAME PROCEDURE

ASSEMBLY OF DIFFERENTIAL CASE

(See page SA-134)

HINT:

- Using a rag, clean off any foreign matter from the parts.
- Apply LSD oil to the contact surfaces of the clutch plates and the thrust washers.
- When installing, the thrust washers (Marking A – M) are not used. To adjust the backlash, use one new thrust washer or the adjusting shim

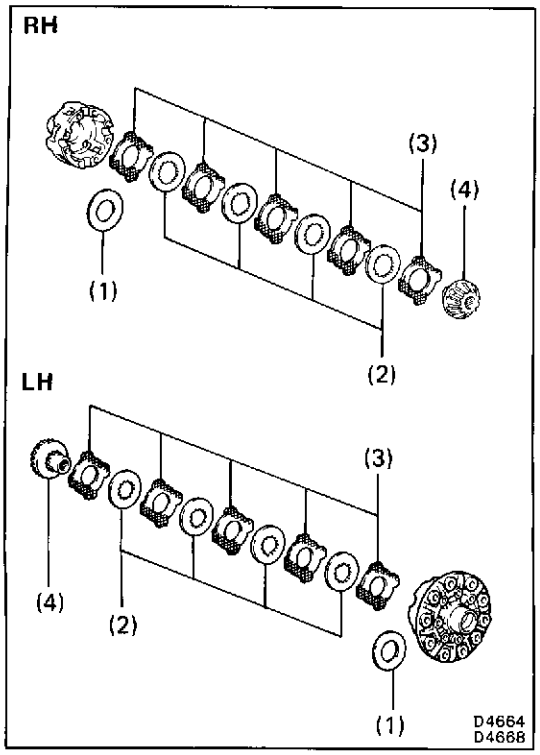

1. MEASURE SIDE GEAR BACKLASH

(a) Install the following parts to the LH and RH cases.

(1) Adjusting shim (0 to 3 pieces)

(2) Clutch plate (4 pieces)

(3) Side gear thrust washer (5 pieces)

(4) Side gear

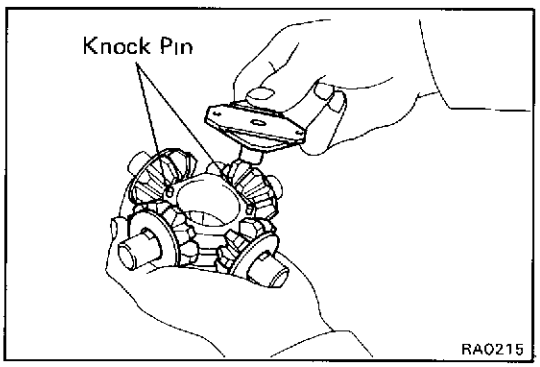

(b) Install the four pinion gears and thrust washers to the spider.

(c) Align the RH retainer holes with the spider knock pins and install the RH retainer.

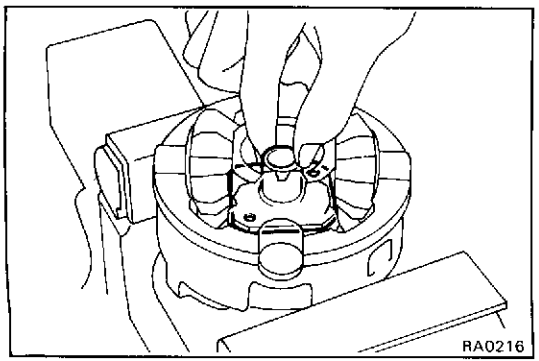

(d) Install the pinion gear and spider to the RH case.

HINT: Install the spider to the RH case tightly, and don move the spring retainer.

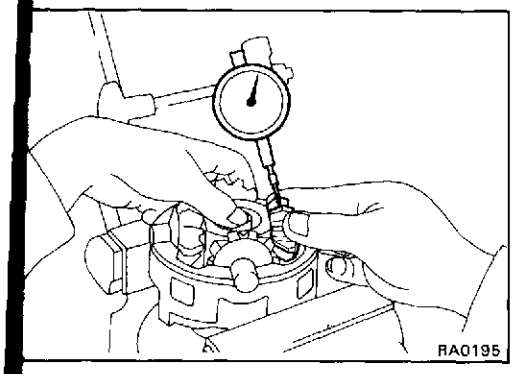

(e) Hold the side gear and spider, measure the side gear backlash.

Backlash: 0.05 — 0.20 mm (0.0020 — 0.0079 in.)

HINT:

- Measure the backlash at the RH case and at the LH case.
- Measure at all four locations

If the backlash is not within specification, select an adjusting shim

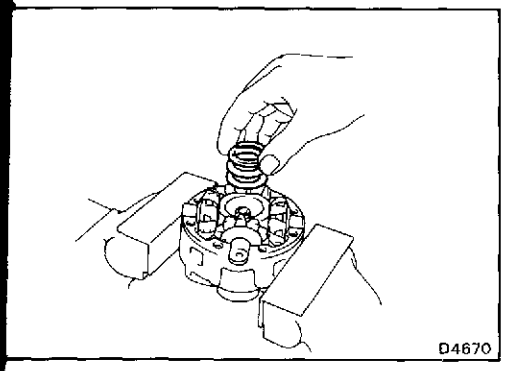

2. ASSEMBLE DIFFERENTIAL CASE

(a) Reinstall the spider and spring RH retainer to the RH case.

HINT: Install the spider the RH case tightly, and don't move the spring.

(b) Install the compression spring and spring LH retainer.

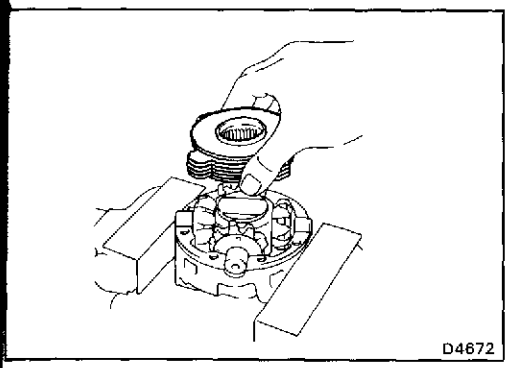

(c) Install the side gear, thrust washers and clutch plates.

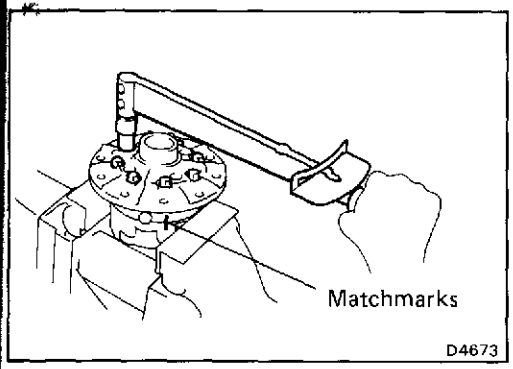

(d) Align matchmarks and assemble LH and RH cases.

HINT: Be careful not to drop the side gear, and check the pinion and side gear alignment.

(e) Tighten the eight bolts uniformly, a little at a time.

Torque: 480 kg-cm (35 ft-lb, 47 N·m)

INSTALLATION OF DIFFERENTIAL

1. INSTALL DIFFERENTIAL CASE IN CARRIER
(See page SA-132)

2. INSTALL DIFFERENTIAL
(See page SA-129)

COIL SPRING TYPE REAR SUSPENISION

COMPONENTS

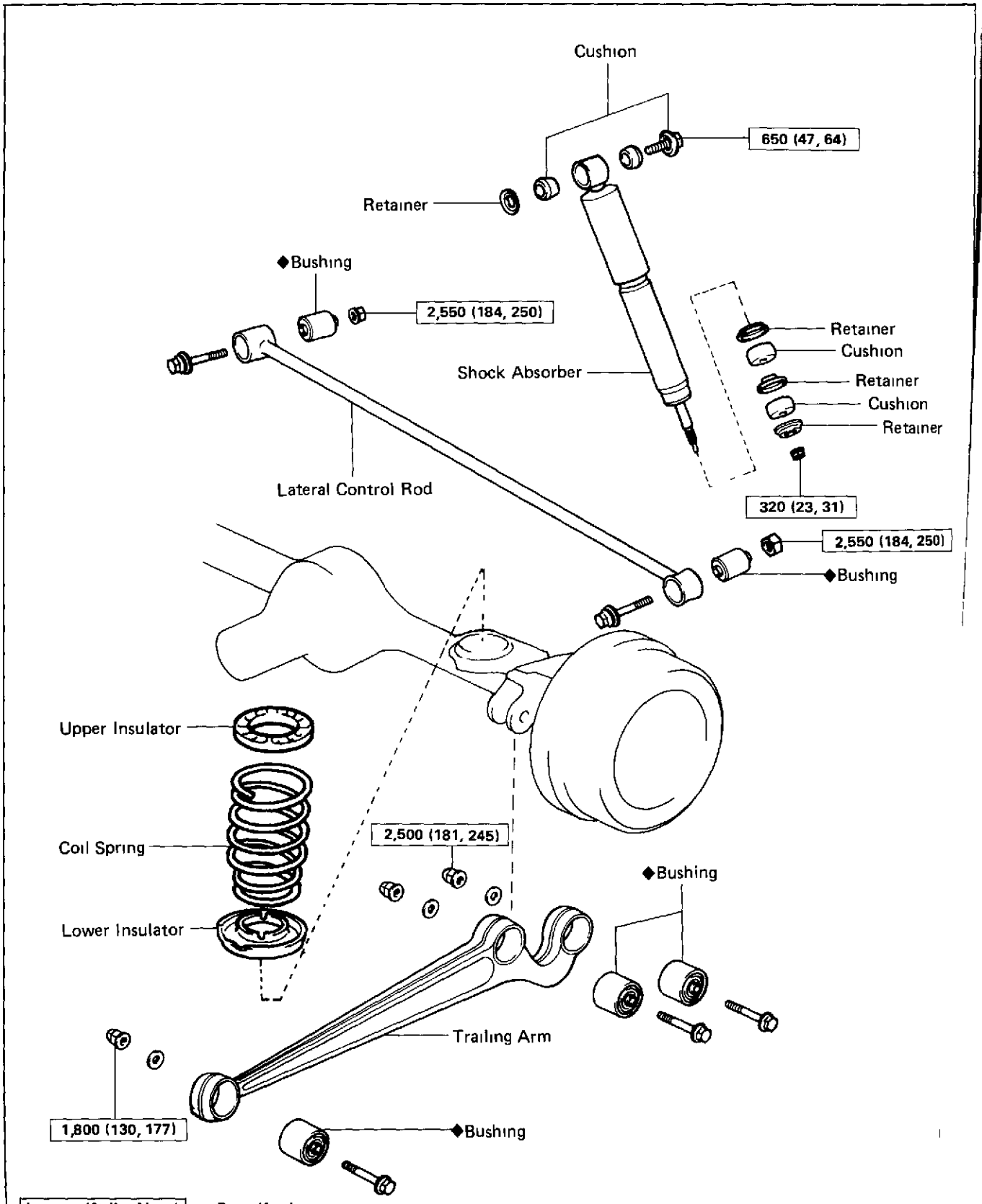

kg-cm (ft-lb, N·m) : Specified torque

◆ Non-reusable part

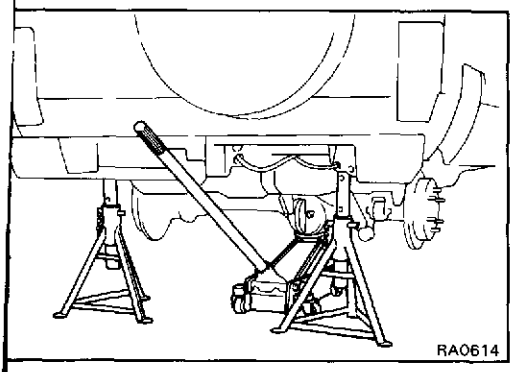
RA0614

Coil Spring and Shock Absorber

(See page SA-200)

REMOVAL OF REAR SHOCK ABSORBER AND COIL SPRING

1. JACK UP VEHICLE

Jack up support the frame with stands. Hold the rear axle housing with a jack.

2. REMOVE REAR WHEEL

3. REMOVE REAR SHOCK ABSORBER

(a) Using a jack, support the rear axle housing.

(b) Remove the shock absorber lower mounting nut, retainers and cushion.

(c) Disconnect the shock absorber from the axle housing

(d) Remove the cushion and retainer from the shock absorber

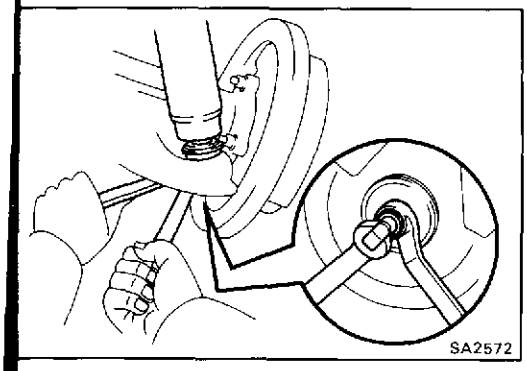
SA2572

(e) Remove the shock absorber upper mounting bolt, retainer, cushions and shock absorber.

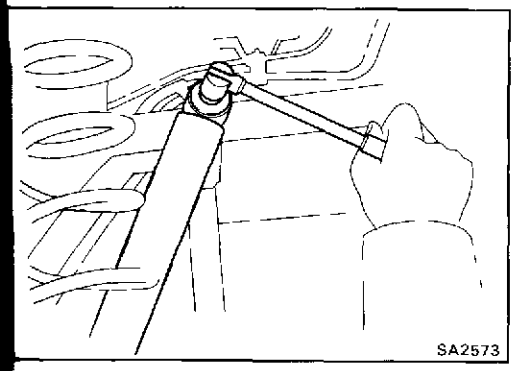
SA2573

4. DISCONNECT LATERAL CONTROL ROD FROM AXLE HOUSING

(a) Remove the bolt and nut and disconnect the lateral control rod from the axle housing.

(b) Remove the bushing from the lateral control rod.

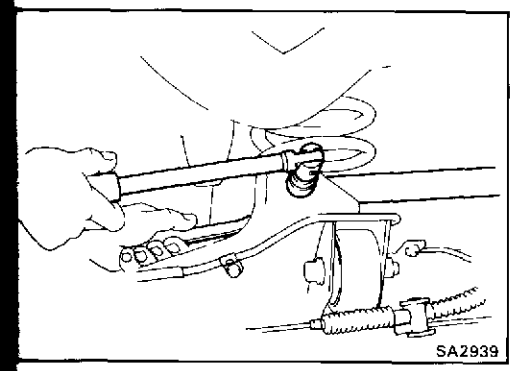
SA2939

5. REMOVE COIL SPRING

(a) Using SST, compress the coil spring.

SST 09727-30020

(b) Remove the coil spring and two coil spring insulators.

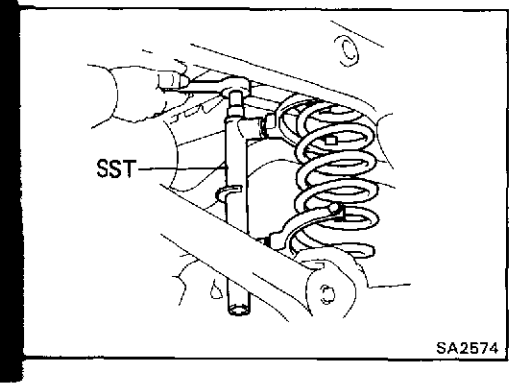

SA2574

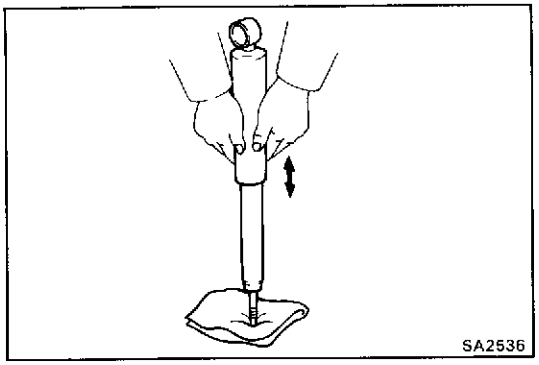
SA2536

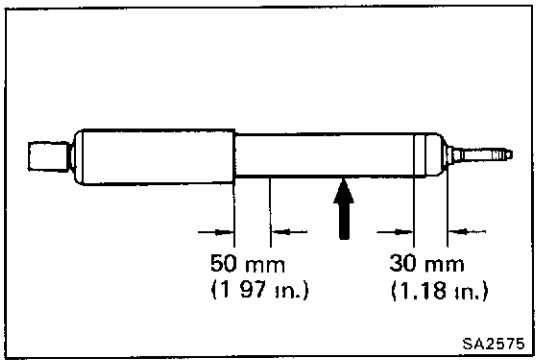

SA2575

INSPECTION OF REAR SHOCK ABSORBER

1. INSPECT OPERATION OF SHOCK ABSORBER

(a) While pushing the shock absorber, check that the pull throughout the stroke is even, and there is no abnormal resistance or noise.

(b) Push the shock absorber in fully and release it. Check that it returns at a constant speed throughout.

2. DISCARD SHOCK ABSORBER

Before discarding the shock absorber, drill a hole 2 – 3 mm (0.079 – 0.118 in.) in diameter at the location shown in the illustration to release the gas inside.

NOTICE:

- **When drilling, chips may fly out work carefully.**
- **The gas is colorless, odorless, and non-poisonous.**

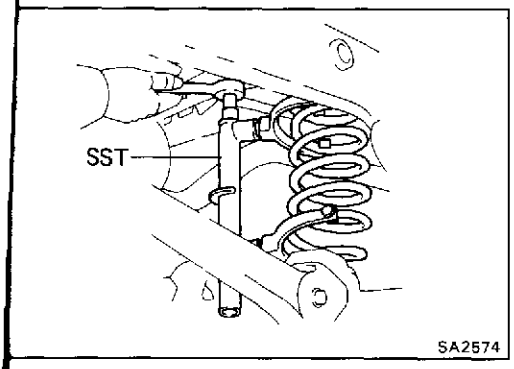

INSTALLATION OF REAR SHOCK ABSORBER AND COIL SPRING

(See page SA-200)

1. INSTALL COIL SPRING

(a) Install the two coil spring insulators.

(b) Using SST, compress the coil spring.

SST 09727-30020

(c) Install coil spring.

(d) Jack up rear axle housing.

(e) Check position of lower insulator.

(f) Check that the lower insulator is installed correctly.

If the insulator is not in correct position, reinstall the coil spring.

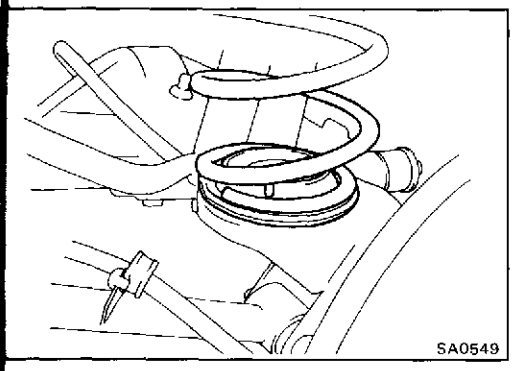

2. CONNECT LATERAL CONTROL ROD

Temporarily connect the lateral control rod to the axle housing with the bushing bolt and nut.

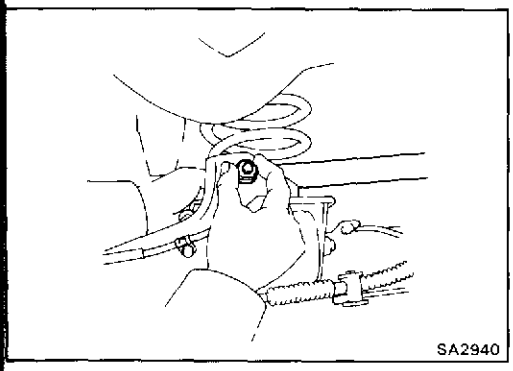

3. INSTALL SHOCK ABSORBER

(a) Install the shock absorber to the frame with the cushions, retainer and bolt.

Torque: 650 kg-cm (47 ft-lb, 64 N·m)

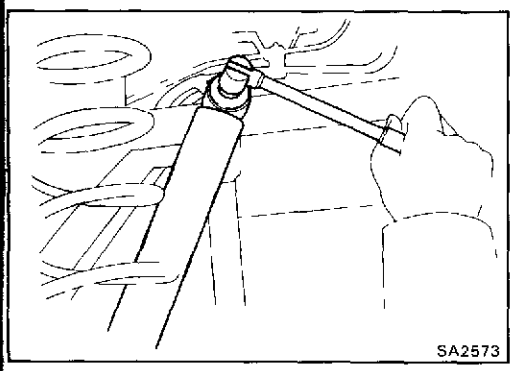

(b) Connect the retainer and cushion to the shock absorber.

(c) Connect the shock absorber to the axle housing with the cushion, reatiners and nut.

Torque: 320kg-cm (23 ft-lb, 31 N·m)

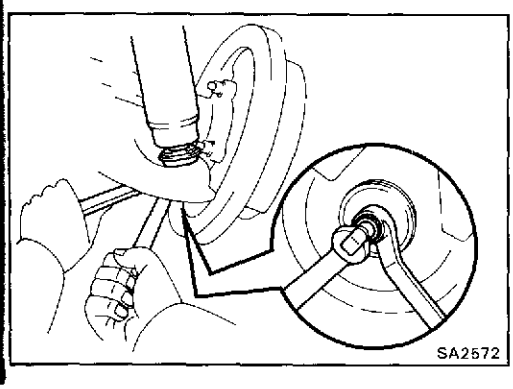

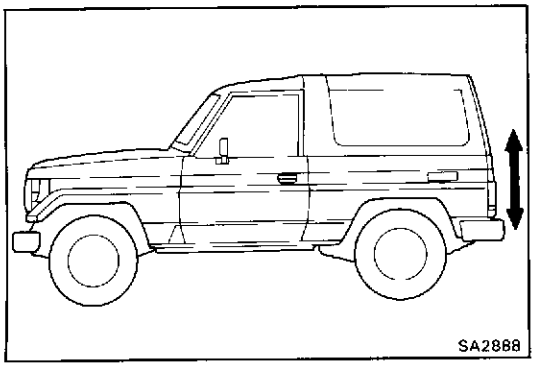
SA2888

4. STABILIZE SUSPENSION

(a) Lower the vehicle.

(b) Bounce the vehicle up and down to stabilize the suspension.

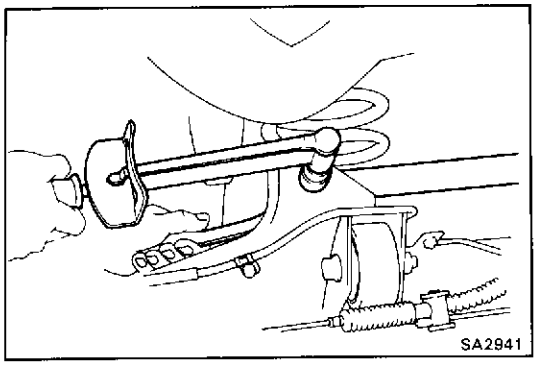
SA2941

5. TORQUE LATERAL CONTROL ROD BOLT AND NUT

(a) Jack up the rear axle housing and support it with the stands.

(b) Torque the lateral control rod nut.

Torque: 2,550 kg-cm (184 ft-lb, 250 N·m)

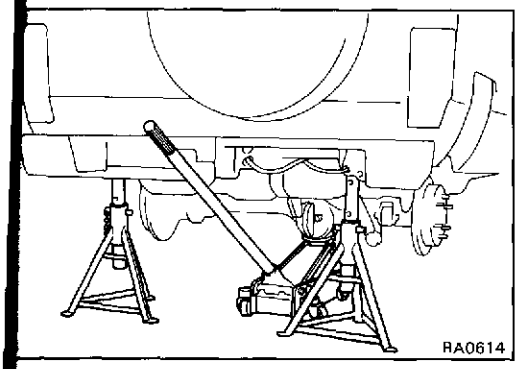

Trailing Arm

(See page SA-200)

REMOVAL OF TRAILING ARM

1. SUPPORT REAR AXLE HOUSING

Jack up and support the frame with stands. Hold the rear axle housing with a jack.

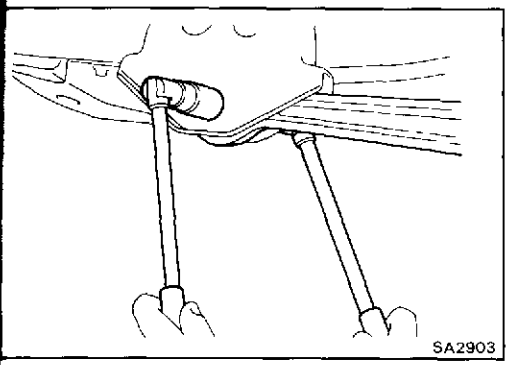

2. REMOVE TRAILING ARM

(a) Remove the front mounting nut and bolt from the frame.

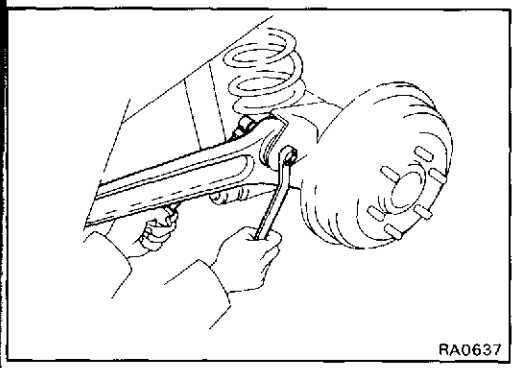

(b) Remove the two rear mounting nuts and bolts from the axle housing.

(c) Lower and remove the trailing arm.

REPLACEMENT OF TRAILING ARM

1. REPLACE THREE TRAILING ARM BUSHINGS

(a) Using SST, press out the bushing.

SST 09228-22020, 09710-30030 (09710-03180)

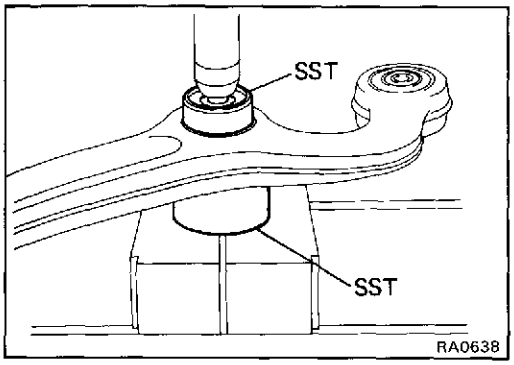

(b) Using SST, press in a new bushing.

SST 09228-22020, 09710-30030 (09710-093180)

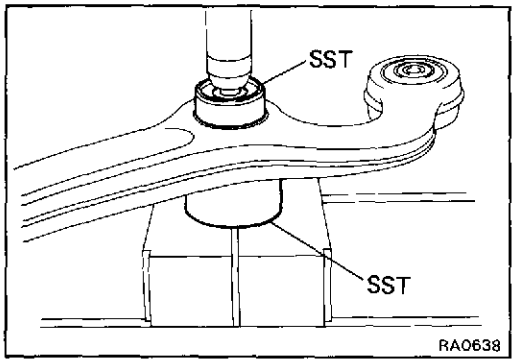

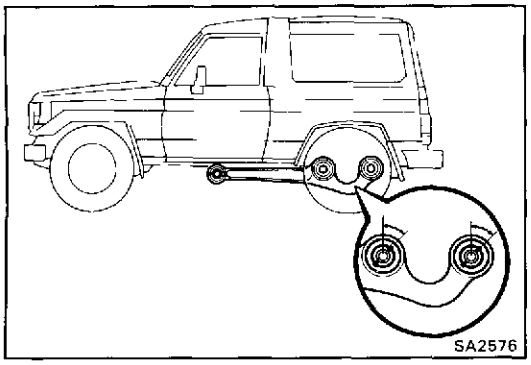

HINT. When assembly the bushing, assemble it so the holes at a 45°angle.

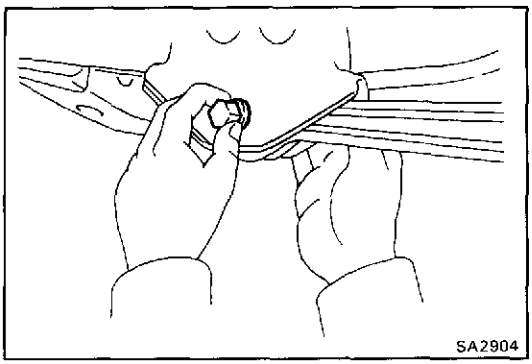

INSTALLATION OF TRAILING ARM

(See page SA-200)

1. INSTALL TRAILING ARM

(a) Temporarily install the trailing arm to the frame with the bolt, washer and nut

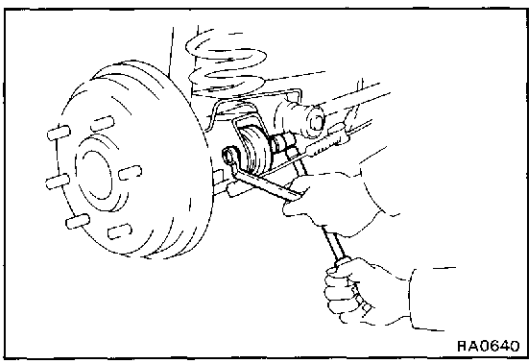

(b) Temporarily connect the trailing arm to the axle housing with the two bolts, washers and nuts.

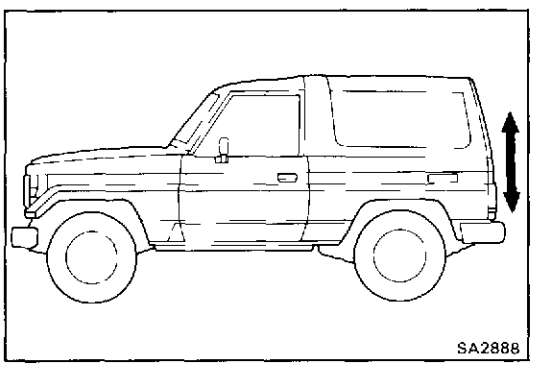

2. STABILIZE SUSPENSION

(a) Lower the vehicle.

(b) Boucne the vehicle up and down to stabilize the suspension.

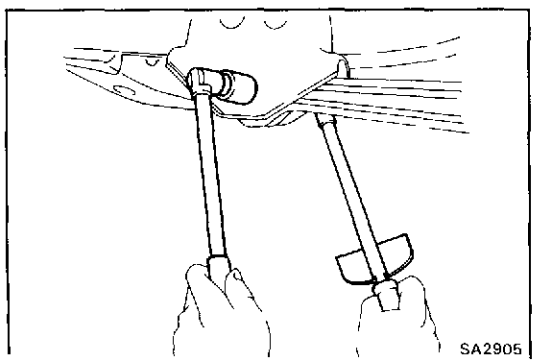

3. TORQUE BOLTS AND NUTS

(a) Torque the bolt and nut

Torque: 1,800 kg-cm (130 ft-lb, 177 N·m)

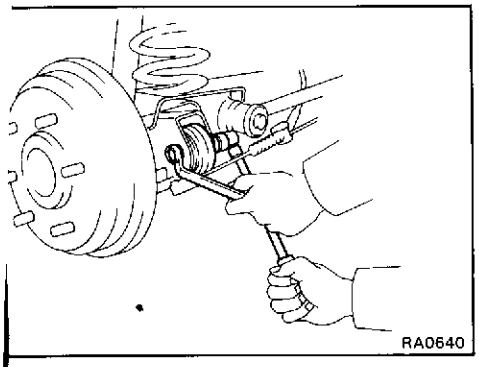

(b) Torque the two bolts and nuts.

Torque: 2,500 kg-cm (181 ft-lb, 245 N·m)

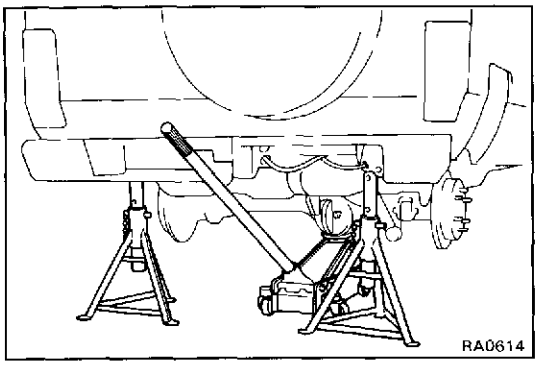

Lateral Control Rod

(See page SA-200)

REMOVAL OF LATERAL CONTROL ROD

1. JACK UP AND SUPPORT REAR AXLE HOUSING

Jack up and support the frame with stands. Hold the rear axle housing with a jack

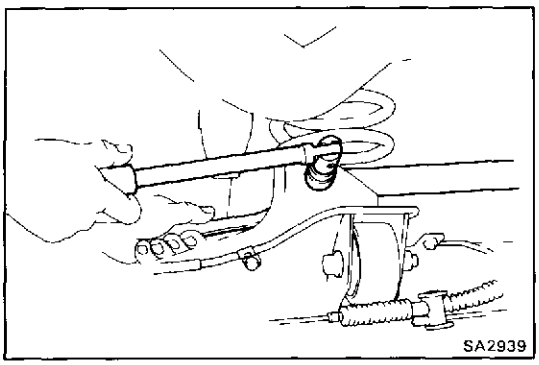

2. DISCONNECT LATERAL CONTROL ROD FROM REAR AXLE HOUSING

(a) Remove the bolt and nut holding the lateral control rod to the rear axle housing

(b) Disconnect the lateral control rod.

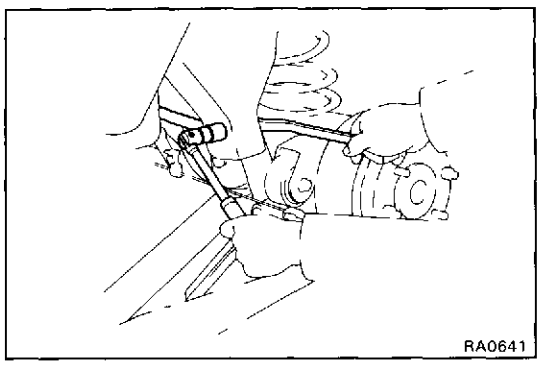

3. DISCONNECT LATERAL CONTROL ROD FROM BODY

(a) Remove the nut and bolt holding the lateral control rod to the body.

(b) Remove the lateral control rod.

REPLACEMENT OF LATERAL CONTROL ROD BUSHING

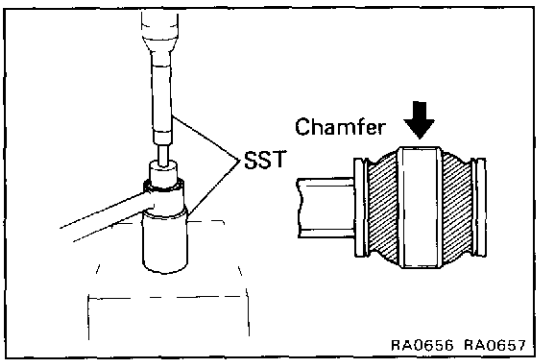

1. REMOVE BUSHING

Using SST and press, press out the bushing from the lateral control rod.

SST 09710-22041
(09710-02020, 09710-02050, 09710-02070)

HINT: When inserting and removing the bushing, press or pull from the chamfered side as shown in the figure.

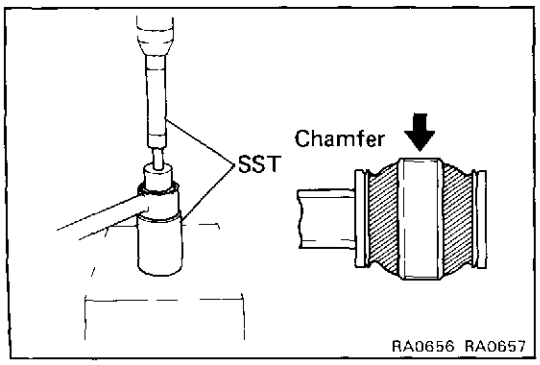

2. INSTALL BUSHING

Using SST and press, press in a new bushing into the lateral control rod.

SST 09710-22041
(09710-02020, 09710-02050, 09710-02070)

HINT: Do not use a lubricant when pressing in the bushing

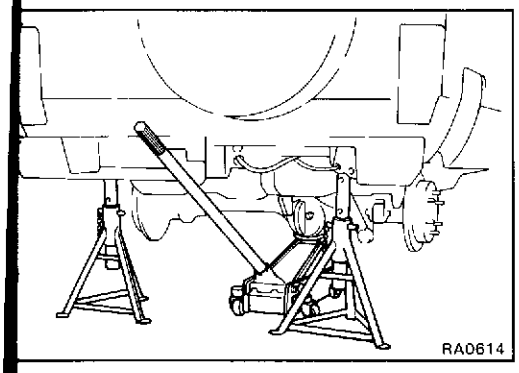
RA0614

INSTALLATION OF LATERAL CONTROL ROD

(See page SA-200)

1. JACK UP AND SUPPORT REAR AXLE HOUSING

Jack up the rear axle housing and support the frame with stands. Hold the rear axle housing with a jack.

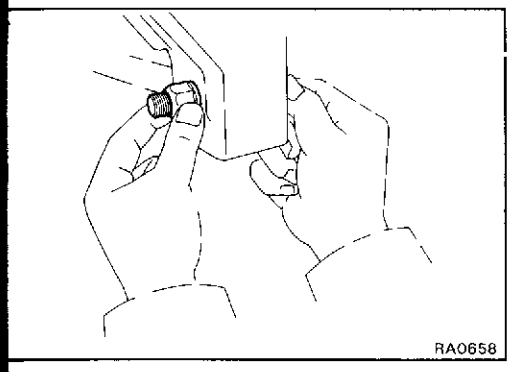
RA0658

2. INSTALL LATERAL CONTROL ROD TO FRAME

Temporarily install the lateral control rod to the frame with the nut and bolt.

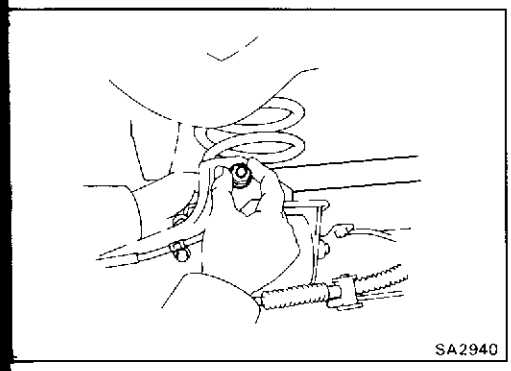
SA2940

2. INSTALL LATERAL CONTROL ROD TO REAR AXLE HOUSING

Temporarily install the lateral control rod to the axle housing with the bushing, bolt and nut.

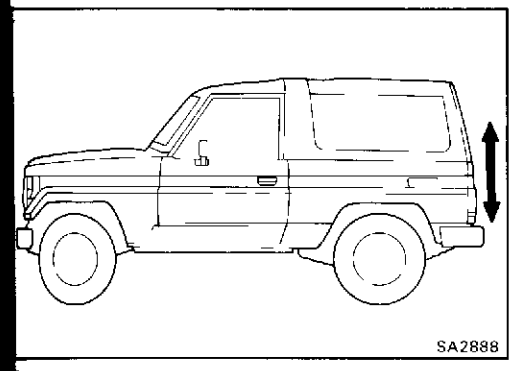
SA2888

3. STABILIZE SUSPENSION

(a) Lower the vehicle.

(b) Bounce the vehicle up and down to stabilize the suspension.

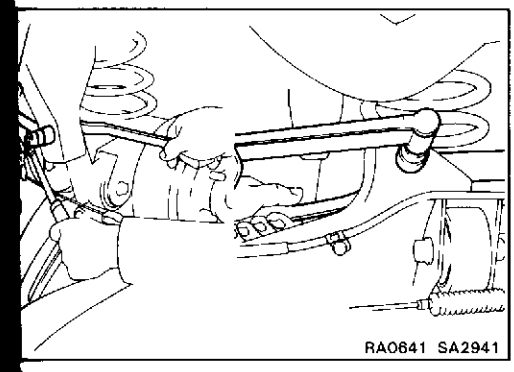
RA0641 SA2941

4. TORQUE BOLT AND NUT

(a) Jack up the axle housing.

(b) Torque the nut and bolt.

Torque: 2,550 kg-cm (184 ft-lb, 250 N·m)

HINT. When tightening the lateral control rod set nut and bolt, lower the vehicle load until the lateral control rod is horizontal.

REAR AXLE SHAFT (Light-Duty)

COMPONENTS

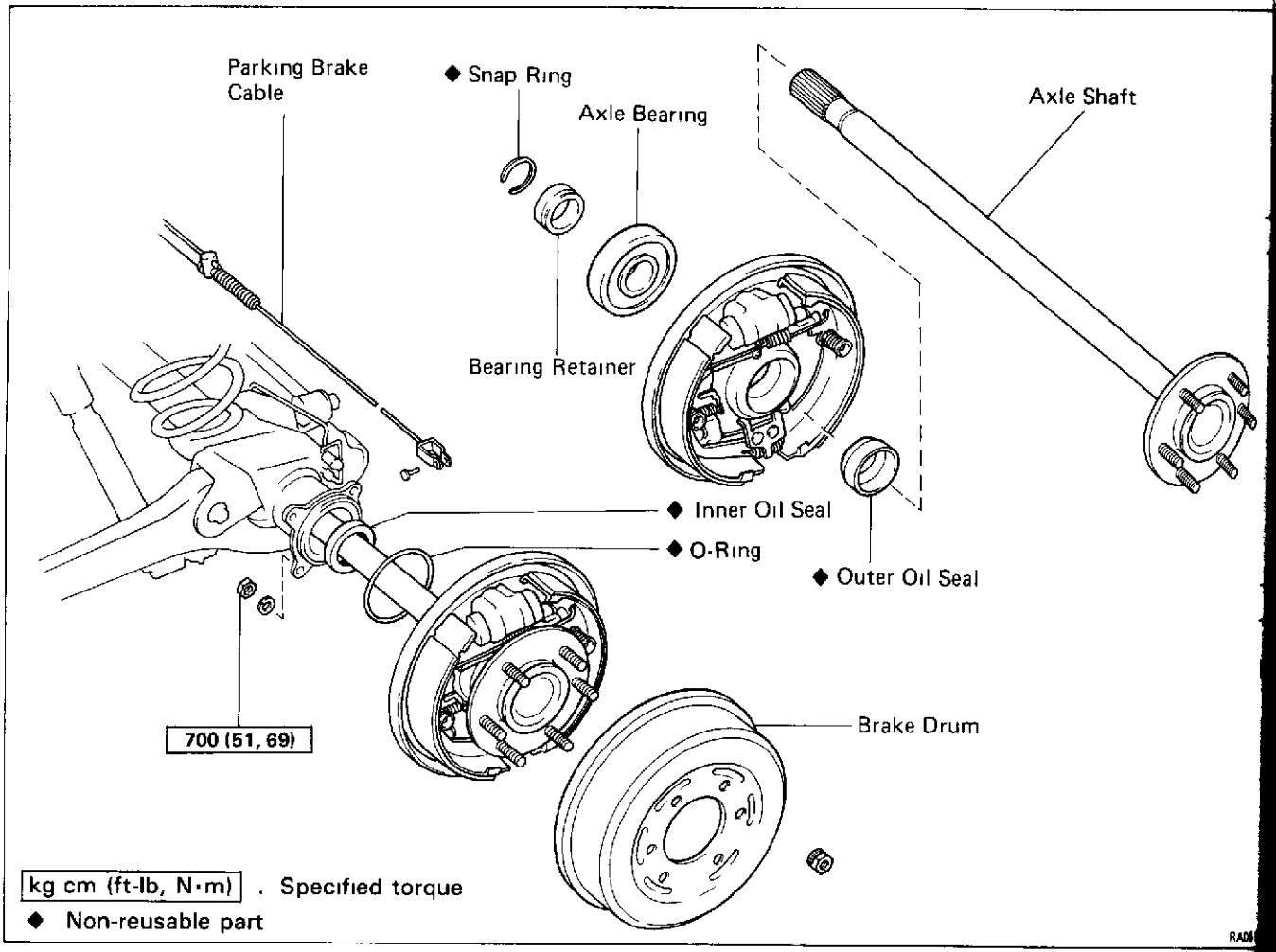

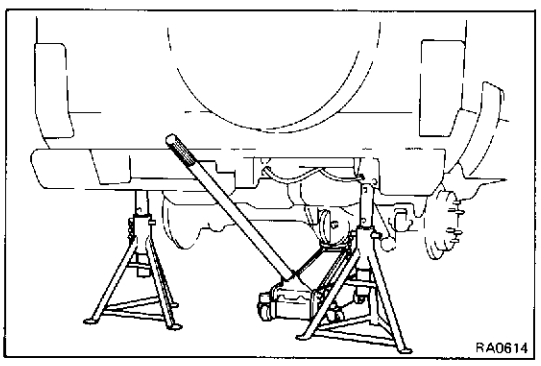

REMOVAL OF REAR AXLE SHAFT

1. JACK UP AND SUPPORT VEHICLE
2. REMOVE WHEEL AND BRAKE DRUM

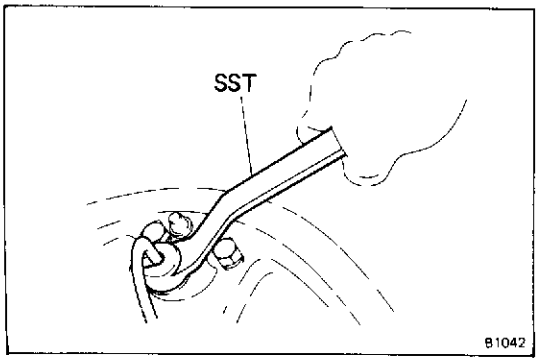

3. DISCONNECT BRAKE TUBE AND PARKING BRAKE CABLE
   (a) Using SST, disconnect the brake tube from the b ing plate.

   SST 09751-36011

   (b) Remove the clip and pin from the parking b cable.

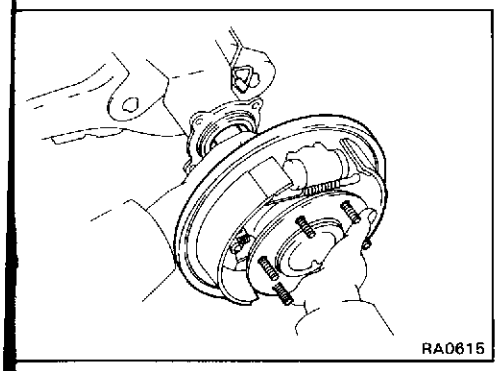

4. REMOVE REAR AXLE SHAFT ASSEMBLY

(a) Remove the four backing plate mounting nuts.

(b) Pull out the rear axle shaft assembly from the rear axle housing.

NOTICE: When pulling out the rear axle shaft, be careful not to damage the oil seal.

5. REMOVE O-RING FROM REAR AXLE HOUSING

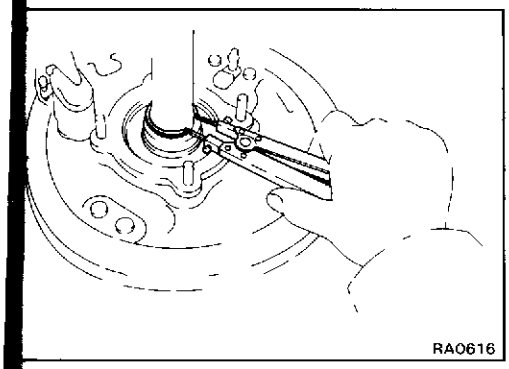

DISASSEMBLY OF REAR AXLE SHAFT ASSEMBLY

(See page SA-210)

1. REMOVE SNAP RING FROM REAR AXLE SHAFT

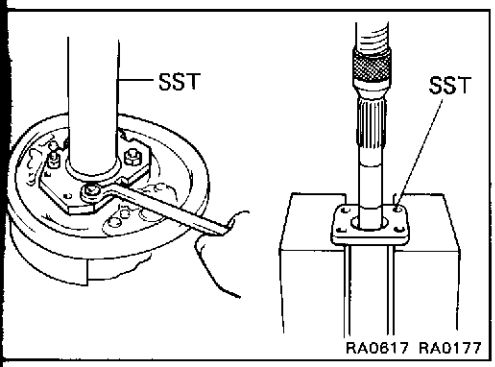

2. REMOVE REAR AXLE SHAFT FROM BACKING PLATE

(a) Attach SST to the backing plate.

SST 09521-25011

(b) Press out the rear axle shaft from the backing plate.

(c) Remove the bearing retainer from the axle shaft.

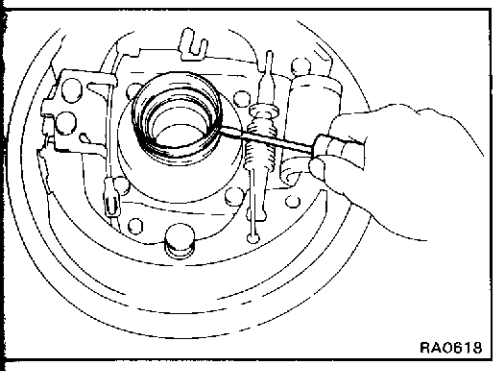

3. REMOVE OUTER OIL SEAL

Using a screwdriver, remove a oil seal.

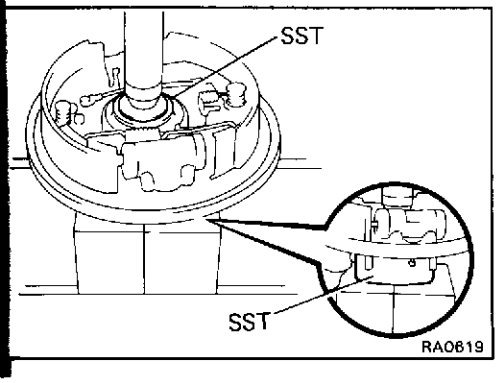

4. REMOVE REAR AXLE BEARING

Using SST, press out the bearing.

SST 09518-36020, 09608-35014 (09608-06100)

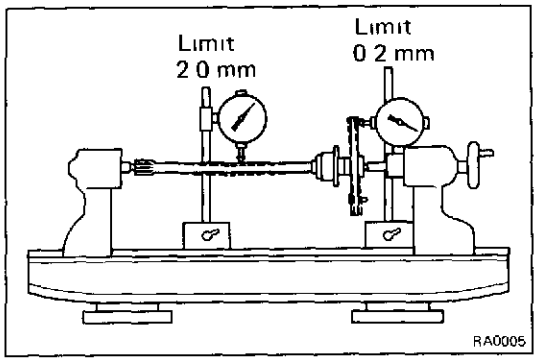

INSPECTION OF REAR AXLE SHAFT

INSPECT REAR AXLE SHAFT AND FLANGE FOR WEAR, DAMAGE OR RUNOUT

Maximum shaft runout: 2.0 mm (0.079 in.)
Maximum flange runout: 0.2 mm (0.008 in.)

If the rear axle shaft or flange are damaged or worn, or if runout is greater than maximum, replace the rear axle shaft.

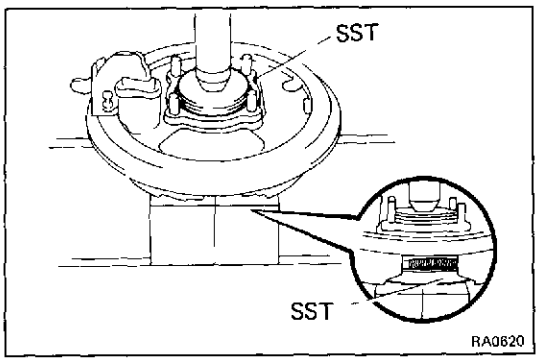

ASSEMBLY OF REAR AXLE SHAFT ASSEMBLY

(See page SA-210)

1. INSTALL REAR AXLE BEARING

Using SST, press in the new bearing to the backing plate.
SST 09515-21010, 09608-35014 (09608-06180)

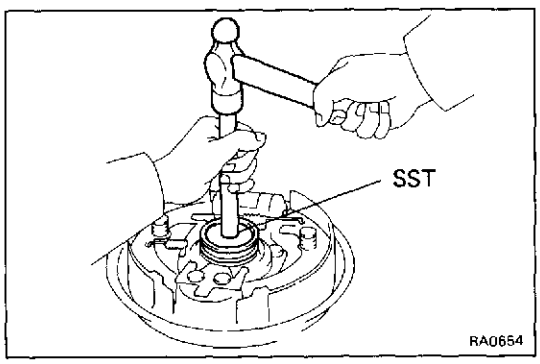

2. INSTALL OUTER OIL SEAL

(a) Using SST, press in the new oil seal to the backing plate.

SST 09608-30012 (09608-04020, 09608-04070)

(b) Apply the MP grease to the oil seal.

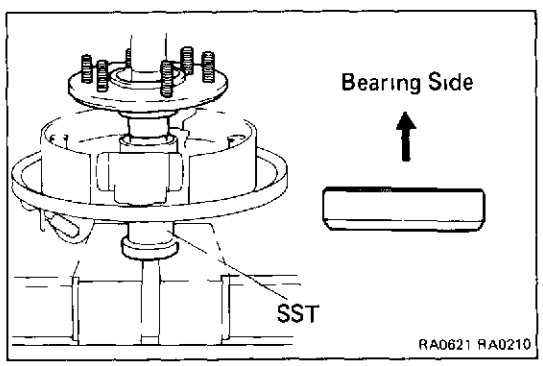

3. INSTALL REAR AXLE SHAFT TO BACKING PLATE

(a) Insert the backing plate and bearing retainer on the rear axle shaft.

(b) Using SST, press the rear axle shaft in to the backing plate.

SST 09316-60010 (09316-00050)

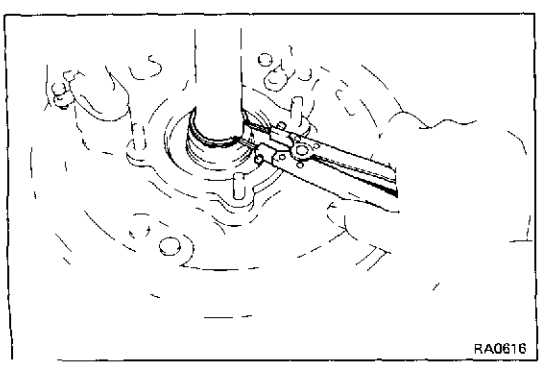

4. INSTALL SNAP RING TO REAR AXLE SHAFT

Using snap ring pliers, install the snap ring.

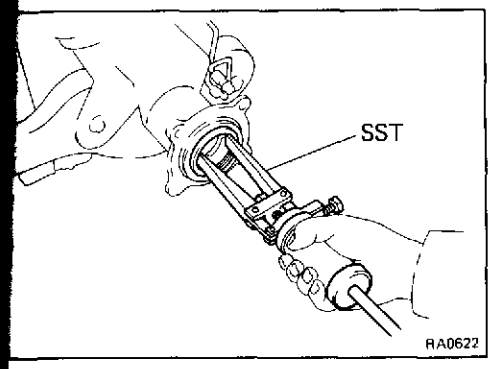

INSTALLATION OF REAR AXLE SHAFT ASSEMBLY

(See page SA-210)

1. REPLACE INNER OIL SEAL

(a) Using SST, remove the oil seal from the rear axle housing.

SST 09308-00010

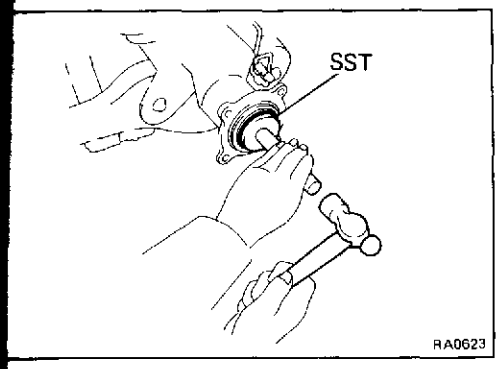

(b) Using SST, drive in a new oil seal.

SST 09608-30012 (09608-04020, 09608-04100)

(c) Apply MP grease to the oil seal.

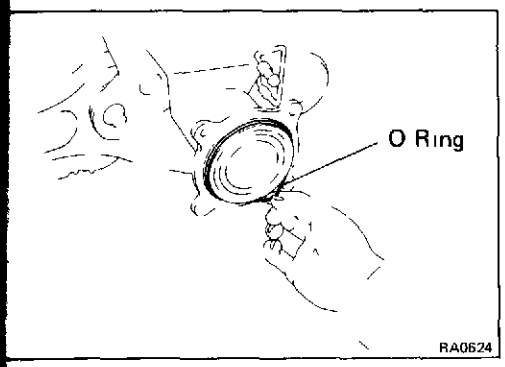

2. INSTALL O-RING TO REAR AXLE HOUSING

(a) Apply MP grease to the O-ring

(b) Install the O-ring to the axle housing.

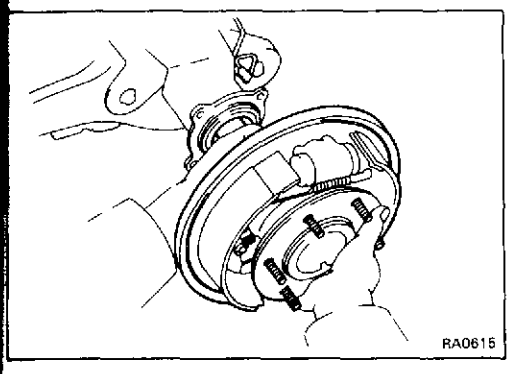

3. INSTALL REAR AXLE SHAFT ASSEMBLY IN AXLE HOUSING

(a) Insert the axle shaft to the housing.

NOTICE: Be careful not to damage the oil seal.

(b) Torque the four backing plate mounting nuts.

Torque: 700 kg-cm (51 ft-lb, 69 N·m)

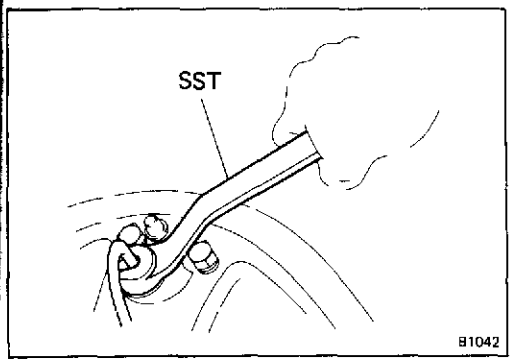

4. CONNECT BRAKE TUBE AND PARKING BRAKE CABLE

SST 09751-36011

5. INSTALL BRAKE DRUM AND WHEEL

6. BLEED BRAKE SYSTEM

(See page BR-7)

PROPELLER SHAFT

	Page
PRECAUTIONS	PR-2
TROUBLESHOOTING	PR-2
PROPELLER SHAFT	PR-2

PRECAUTIONS

Be careful not to grip the propeller shaft tube too tight in the vise as this will cause deformation.

TROUBLESHOOTING

Problem	Possible cause	Remedy	Page
Noise	Sleeve yoke spline worn	Replace sleeve yoke	PR-4
	Spider bearing worn or stuck	Replace spider bearing	PR-4
Vibration	Propeller shaft runout	Replace propeller shaft	PR-3
	Propeller shaft imbalance	Balance propeller shaft	
	Sleeve yoke spline stuck	Replace sleeve yoke	PR-4

PROPELLER SHAFT

COMPONENTS

- **RJ, LJ Series (For Front and Rear Propeller Shaft)**
- **FJ, PZJ, HZJ Series (For Front Propeller Shaft)**

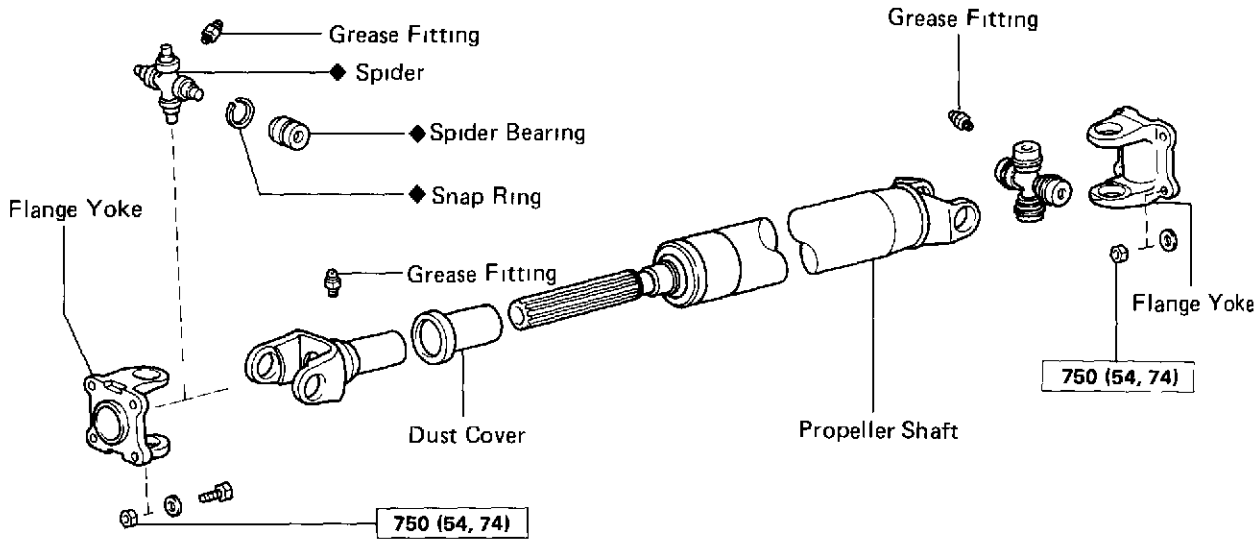

- **BJ, HJ Series (For Front and Rear Propeller Shaft)**
- **FJ, PZJ, HZJ Series (For Rear Propeller Shaft)**

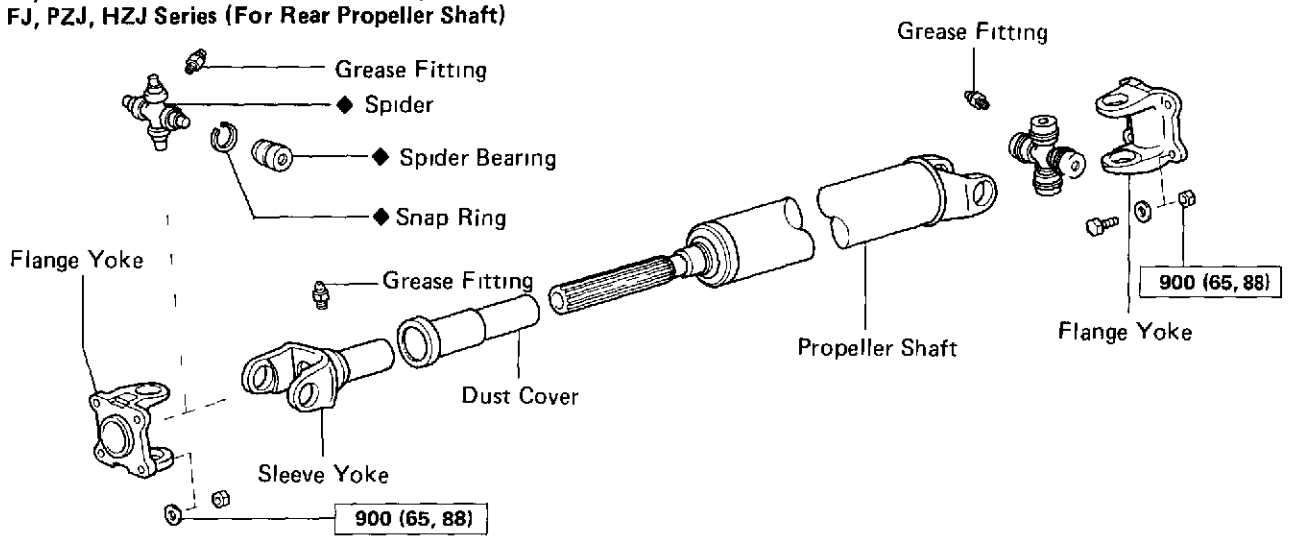

◆ Non-reusable part

kg-cm (ft-lb, N·m) Specified torque

PR027
PR027

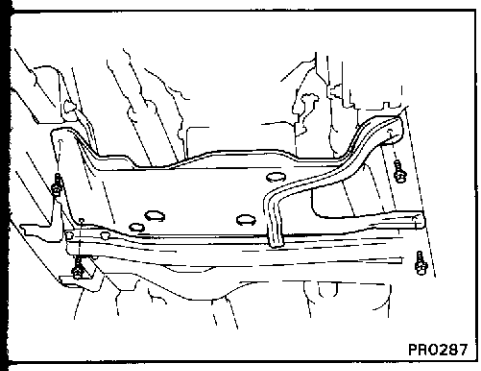
PR0287

REMOVAL OF FRONT AND REAR PROPELLER SHAFT

1. REMOVE UNDER COVER

Remove four bolts and the under cover.

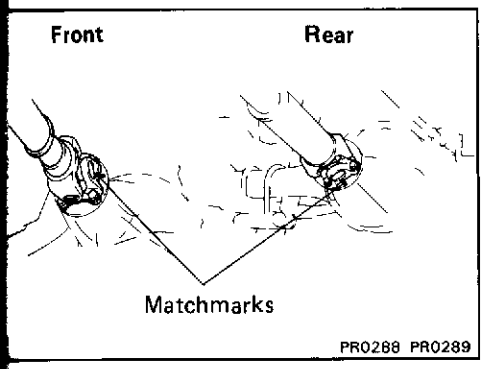

PR0288 PR0289

2. DISCONNECT PROPELLER SHAFT FLANGE FROM COMPANION FLANGE ON DIFFERENTIAL

(a) Put matchmarks on the flanges.

(b) Remove the four bolts and nuts.

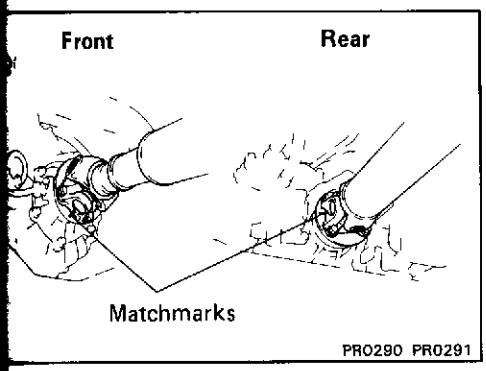

PR0290 PR0291

3. DISCONNECT PROPELLER SHAFT FLANGE FROM COMPANION FLANGE ON TRANSFER

(a) Put matchmarks on the flange.

(b) Remove the four nuts.

(c) Remove the propeller shaft.

INSPECTION OF PROPELLER SHAFT COMPONENTS

1. INSPECT FRONT AND REAR PROPELLER SHAFTS FOR DAMAGE OR RUNOUT

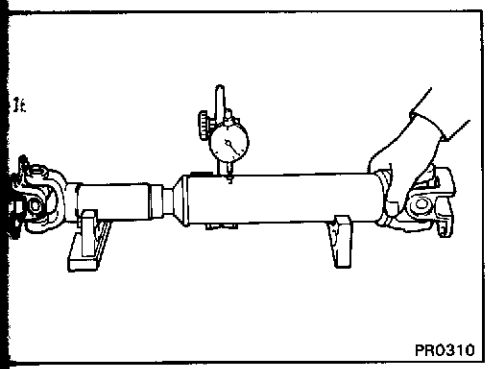
PR0310

If shaft runout is greater than maximum, replace the shaft.

Maximum runout: 0.8 mm (0.031 in.)

2. INSPECT SPIDER BEARINGS

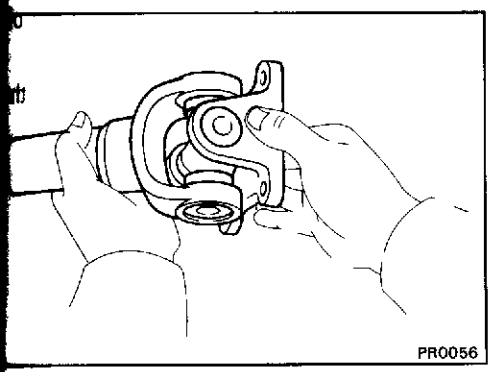
PR0056

(a) Inspect the spider bearings for wear or damage.

(b) Check the spider bearing axial play by turning the yoke while holding the shaft tightly.

Bearing axial play: Less than 0.05 mm (0.0020 in.)

If necessary, replace the spider bearing.

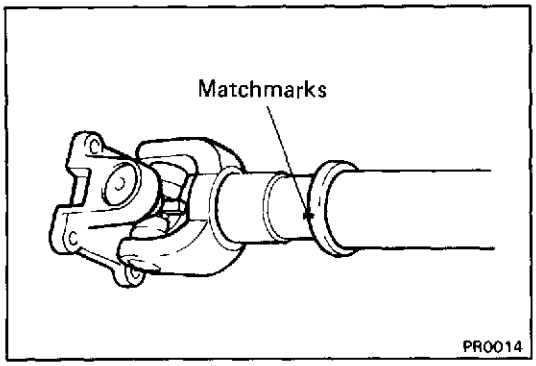

DISASSEMBLY OF PROPELLER SHAFT

1. REMOVE SLEEVE YOKE FROM PROPELLER SHAFT

(a) Place matchmarks on the sleeve yoke and shaft.

(b) Pull out the sleeve yoke from the shaft.

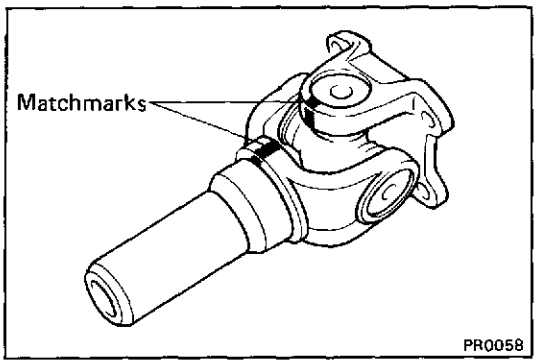

2. REMOVE SPIDER BEARING

(a) Put matchmarks on the sleeve yoke and flange.

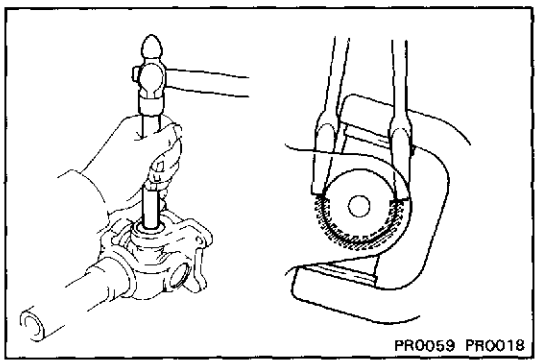

(b) Slightly tap in the bearing outer races.

(c) Using two screwdrivers, remove the four snap ring from the grooves.

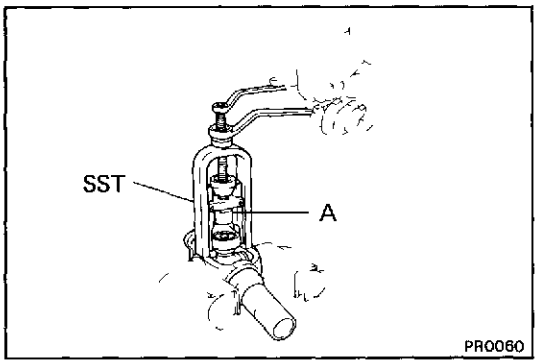

(d) Using SST, push out the bearing from the flange.

SST 09332-25010

HINT: Sufficiently raise the part indicated by A so that does not come into contact with the bearing.

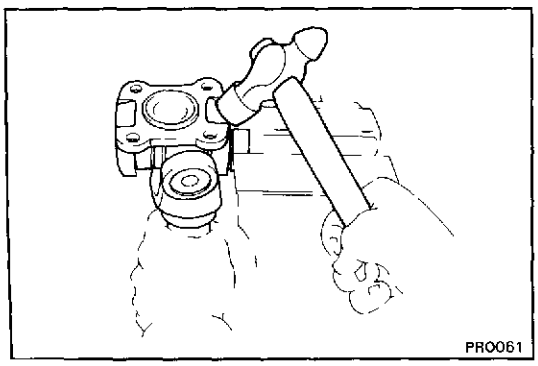

(e) Clamp the bearing outer race in a vise and tap the flange with a hammer.

HINT: Remove the bearing on the opposite side in same procedure

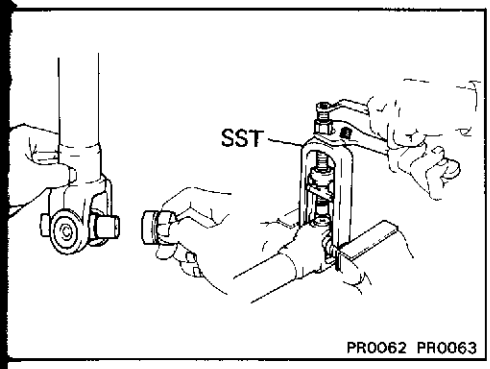

(f) Install the two removed bearing outer races to the spider.

(g) Using SST, push out the bearing from the yoke.

SST 09332-25010

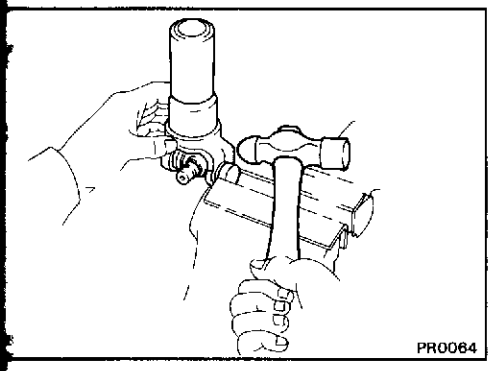

(h) Clamp the outer bearing race in a vise and tap off the yoke with a hammer.

HINT: Remove the bearing on the opposite side in the same procedure.

ASSEMBLY OF PROPELLER SHAFT

(See page PR-2)

HINT: When replacing the spider, be sure that the grease fitting assembly hole is facing in the direction shown in figure.

SPIDER GREASE FITTING ASSEMBLY DIRECTION
Front Propeller Shaft: FJ, PZJ, HZJ, RJ, LJ Series
Rear Propeller Shaft: RJ, LJ Series

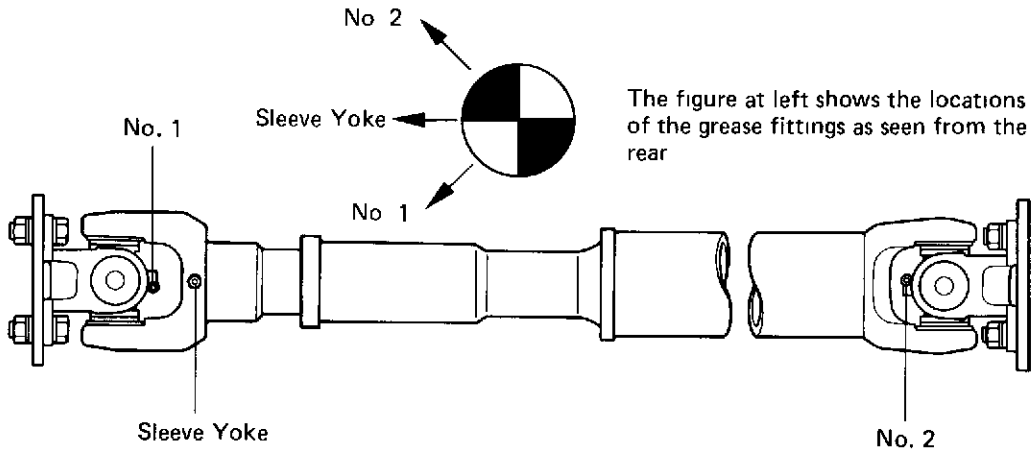

SPIDER GREASE FITTING ASSEMBLY DIRECTION
Front Propeller Shaft: BJ, HJ Series
Rear Propeller Shaft: FJ, PZJ, HZJ, BJ, HJ Series

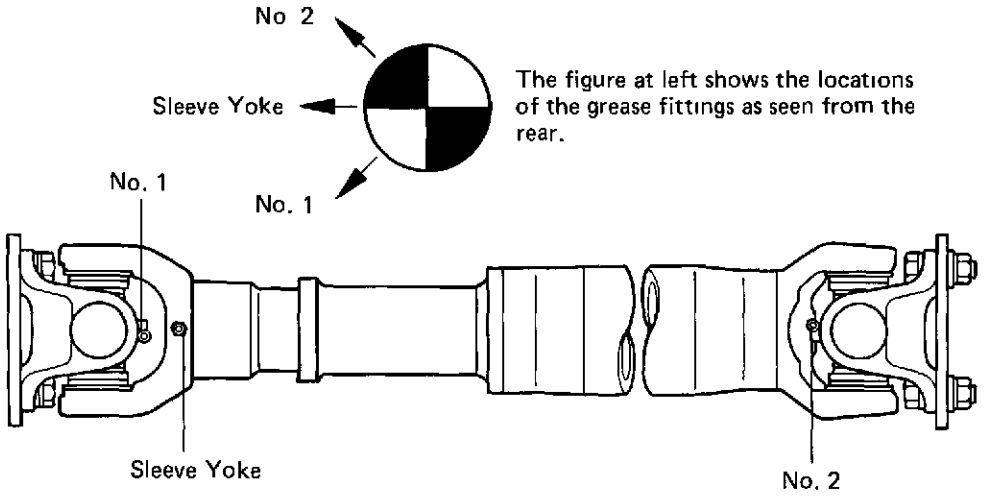

The figure at left shows the locations of the grease fittings as seen from the rear.

PR028

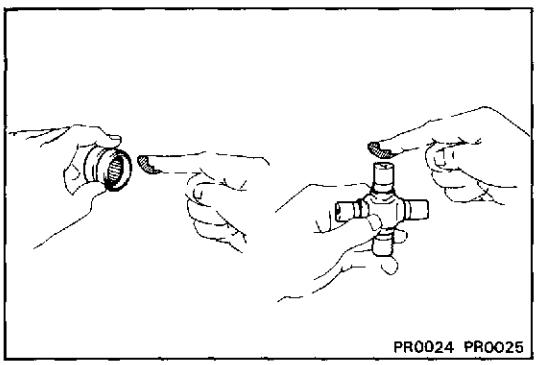

1. INSTALL SPIDER BEARINGS

(a) Apply MP grease to the spider and bearings.

HINT: Be careful not to apply too much grease.

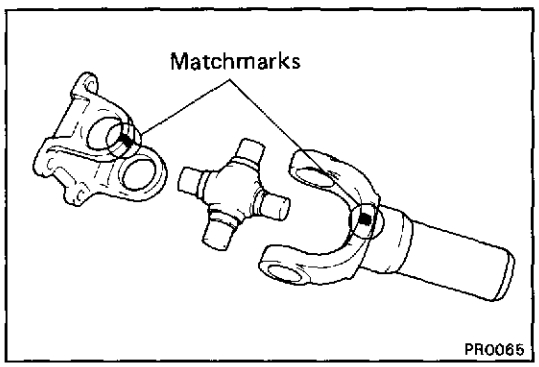

(b) Align the matchmarks on the yoke and flange.

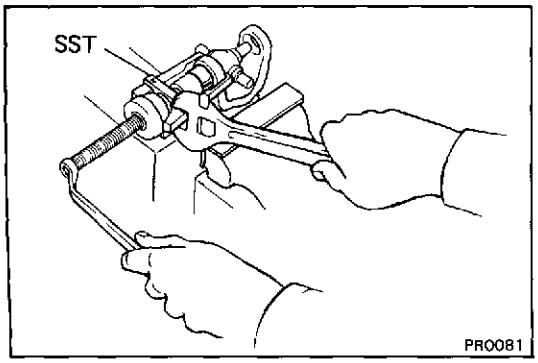

(c) Fit the new spider into the yoke.

(d) Using SST, install the new bearing on the spider

SST 09332-25010

RJ, LJ Series (For Front and Rear Propeller Shaft)
FJ, PZJ, HZJ Series (For Front Propeller Shaft)

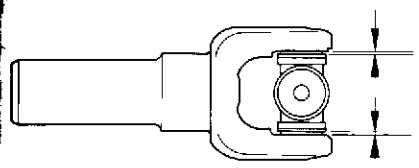

BJ, HJ Series (For Front and Rear Propeller Shaft)
FJ, PZJ, HZJ Series (For Rear Propeller Shaft)

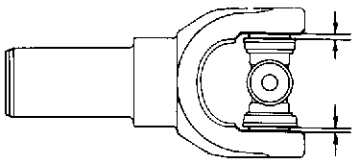

PR0286
PR0068

(e) Using SST, adjust both bearings so that the snap ring grooves are at maximum and equal widths.

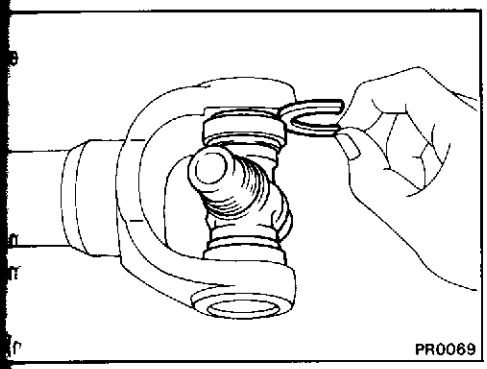

PR0069

(f) Install two snap rings of equal thickness which will allow 0 — 0.05 mm (0 — 0.0020 in.) axial play.

HINT: Do not reuse the snap rings.

Thickness of snap ring

Front Propeller Shaft: FJ, PZJ, HZJ, RJ, LJ Series

Rear Propeller Shaft: RJ, LJ Series

Color	Mark	Thickness mm (in.)
—	1	2.100 — 2.150 (0.0827 — 0.0846)
—	2	2.150 — 2.200 (0.0846 — 0.0866)
—	3	2.200 — 2.250 (0.0866 — 0.0886)
Brown	—	2.250 — 2.300 (0.0886 — 0.0906)
Blue	—	2.300 — 2.350 (0.0906 — 0.0925)
—	6	2.350 — 2.400 (0.0925 — 0.0945)
—	7	2.400 — 2.450 (0.0945 — 0.0965)
—	8	2.450 — 2.500 (0.0965 — 0.0984)

Front Propeller Shaft: BJ, HJ Series

Rear Propeller Shaft: FJ, PZJ, HZJ, BJ, HJ Series

Thickness mm (in.)	Color
2.00 (0.0787)	—
2.03 (0.0799)	Brown
2.06 (0.0811)	Blue
2.09 (0.0823)	—

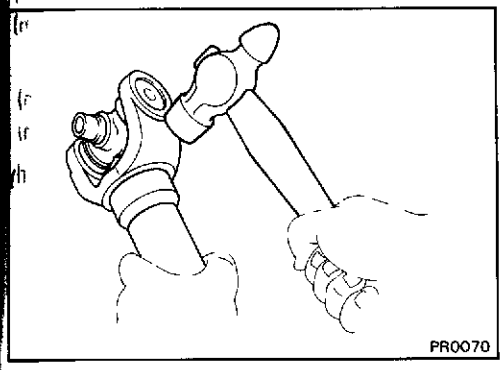

PR0070

(g) Using a hammer, tap the yoke until there is no clearance between the bearing outer race and snap ring.

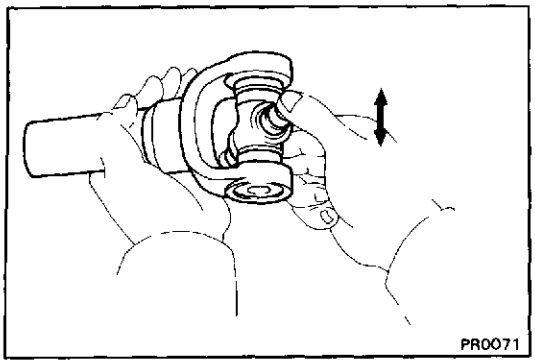
PR0071

(h) Check that the spider bearing moves smoothly.

(i) Check the spider bearing axial play.

Bearing axial play: Less than 0.05 mm (0.0020 in.)

HINT: Install new spider bearings on the flange side in the procedure described above.

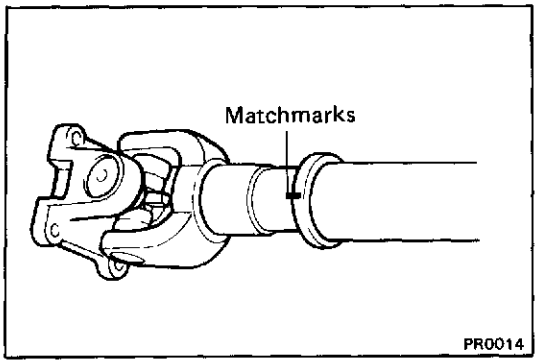

PR0014

2. INSERT SLEEVE YOKE INTO PROPELLER SHAFT

(a) Apply MP grease to the propeller shaft spline and sleeve yoke sliding surface.

(b) Align the matchmarks on the sleeve and propeller shaft.

(c) Install the propeller shaft into the sleeve yoke.

INSTALLATION OF FRONT AND REAR PROPELLER SHAFTS

1. CONNECT PROPELLER SHAFT FLANGE TO COMPANION FLANGE ON TRANSFER

(a) Align the matchmarks on the flanges and connect the flanges with four nuts.

(b) Torque the nuts.

Torque:

Front Propeller Shaft

BJ, HJ Series: 900 kg-cm (65 ft-lb, 88 N·m)
Others: 750 kg-cm (54 ft-lb, 74 N·m)

Rear Propeller Shaft

RJ, LJ Series: 750 kg-cm (54 ft-lb, 74 N·m)
Othes: 900 kg-cm (65 ft-lb, 88 N·m)

HINT: When installing the washers, put them proper in place

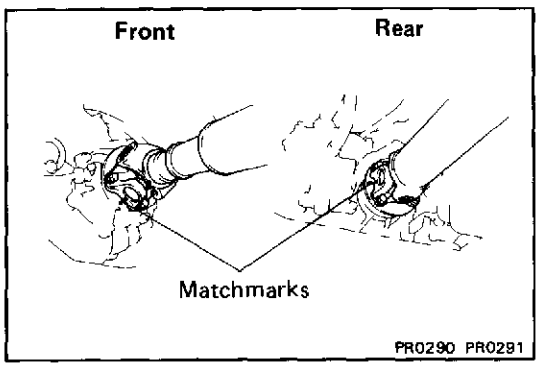

PR0290 PR0291

2. CONNECT PROPELLER SHAFT FLANGE TO COMPANION FLANGE ON DIFFERENTIAL

(a) Align the matchmarks on the flanges and connect the flanges with four bolts and nuts.

(b) Torque the bolts and nuts.

Torque:

Front Propeller Shaft

BJ, HJ Series: 900 kg-cm (65 ft-lb, 88 N·m)
Others: 750 kg-cm (54 ft-lb, 74 N·m)

Rear Propeller Shaft

RJ, LJ Series: 750 kg-cm (54 ft-lb, 74 N·m)
Othes: 900 kg-cm (65 ft-lb, 88 N·m)

HINT: When installing the washers, put them proper in place.

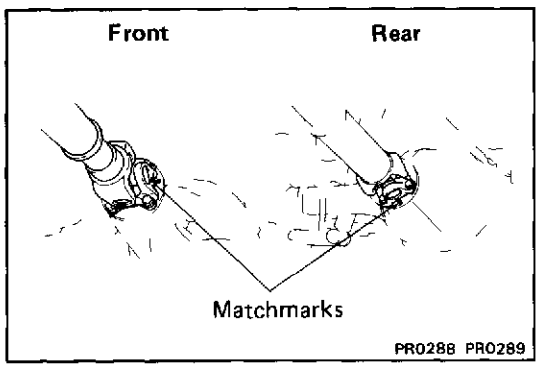

PR0288 PR0289

3. INSTALL UNDER COVER

Install four bolts and the under cover.

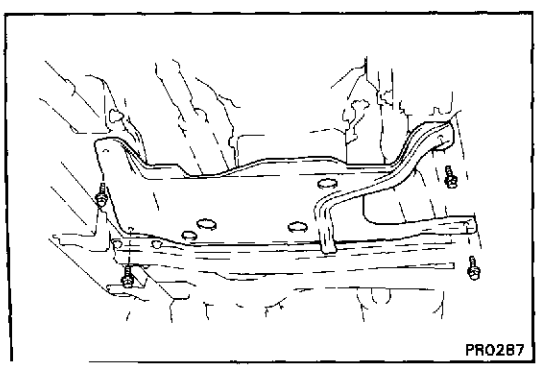
PR0287

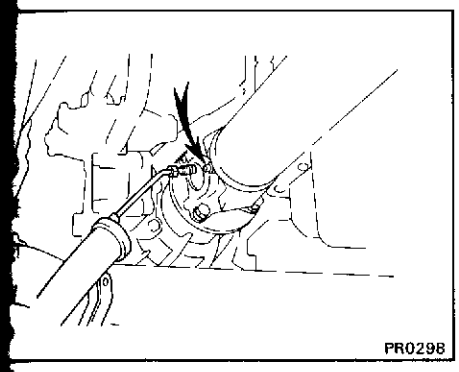

4. APPLY MP GREASE TO GREASE FITTING

Using a grease gun, pump the MP grease into each fitting until it begins to flow around the oil seal

STEERING

	Page
PRECAUTION	SR-2
TROUBLESHOOTING	SR-2
ON-VEHICLE INSPECTION	SR-3
STEERING COLUMN	SR-4
Non-Tilt Steering Column	SR-6
Tilt Steering Column	SR-9
MANUAL GEAR HOUSING	SR-20
POWER STEERING	SR-29
Description	SR-29
On-Vehicle Inspection	SR-33
Power Steering Pump	SR-38
Gear Housing	SR-62
STEERING LINKAGE (HEAVY DUTY)	SR-72
STEERING LINKAGE (LIGHT DUTY)	SR-76

PRECAUTION

Care must be taken to replace parts properly because they may affect the performance of the steering system and result in a driving hazard.

TROUBLESHOOTING

Problem	Possible cause	Remedy	Page
Hard steering	Tires improperly inflated	Inflate tires to proper pressure	A-15
	Insufficient lubricant	Lubricate suspension and steering linkage	
	Excessive caster	Check front wheel alignment	SA-3
	Steering system joints worn	Replace steering system joints	SR-72, 76
	Steering column binding	Inpsect steering column	SR-4
	Steering gear out of adjustment or broken	Adjust or repair steering gear	SR-20, 62
	Power steering belt loose	Adjust belt	SR-33
	Fluid level in reservoir low	Check reservoir	SR-34
	Power steering unit faulty	Check power steering unit	SR-38, 62
Poor return	Tires improperly inflated	Inflate tires to proper pressure	A-15
	Insufficient lubricant	Lubricate suspension	
	Wheel alignment incorrect	Check front wheel alignment	SA-3
	Steering column binding	Inspect steering column	SR-4
	Steering gear out of adjustment or broken	Adjust or repair steering gear	SR-20, 62
Excessive play	Front wheel bearing worn	Replace front wheel bearing	SA-29
	Main shaft yoke or intermediate shaft yoke worn	Replace main shaft or intermediate shaft	SR-4
	Steering system joints worn	Replace steering system joints	SR-72, 76
	Steering gear out of adjustment or broken	Adjust or repair steering gear	SR-20, 62
Abnormal noise	Steering linkage loose	Tighten steering linkage	SR-72, 76
	Steering system joints worn	Replace steering system joints	SR-72, 76
	Steering gear out of adjustment or broken	Adjust or repair steering gear	SR-20, 62

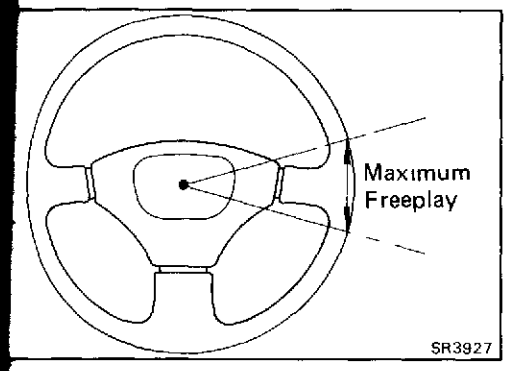

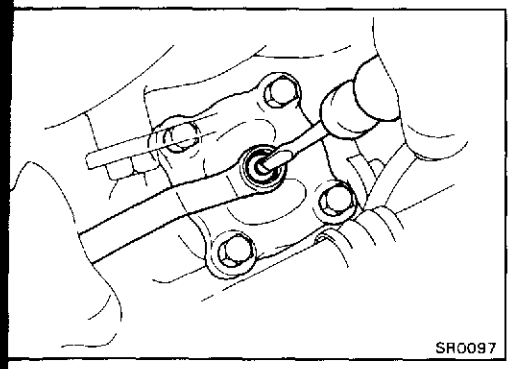

ON-VEHICLE INSPECTION

STEERING WHEEL FREEPLAY

1. **CHECK THAT STEERING WHEEL FREEPLAY IS CORRECT**

   With the vehicle stopped and pointed straight ahead, rock the steering wheel gently back and forth with light finger pressure. Freeplay should not exceed the maximum limit

   Maximum play: 40 mm (1.58 in.)

   If incorrect, adjust or repair as required.

2. **POINT WHEELS STRAIGHT AHEAD**

3. **ADJUST STEERING GEAR HOUSING**

   (a) Loosen the lock nut.

   (b) Turn the adjusting screw clockwise to decrease wheel freeplay and counterclockwise to increase it

   HINT: Turn the adjusting screw in small increments and check the wheel freeplay between each adjustment

4. **CHECK THAT STEERING DOES NOT BIND**

   Turn the steering wheel half way around in both directions.

   Check that the freeplay is correct and steering is smooth and without rough spots.

5. **HOLD ADJUSTING SCREW AND TIGHTEN LOCK NUT**

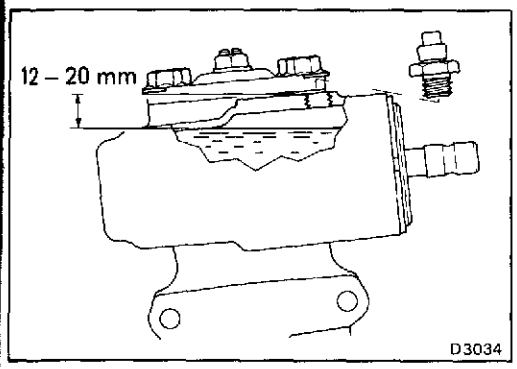

OIL LEVEL

CHECK STEERING GEAR HOUSING OIL LEVEL

Oil level: 12 — 20 mm (0.47 — 0.79 in.)

If low, fill with gear oil and check for leakage

STEERING COLUMN

REMOVAL AND INSTALLATION OF STEERING COLUMN

Remove and install the parts as shown.

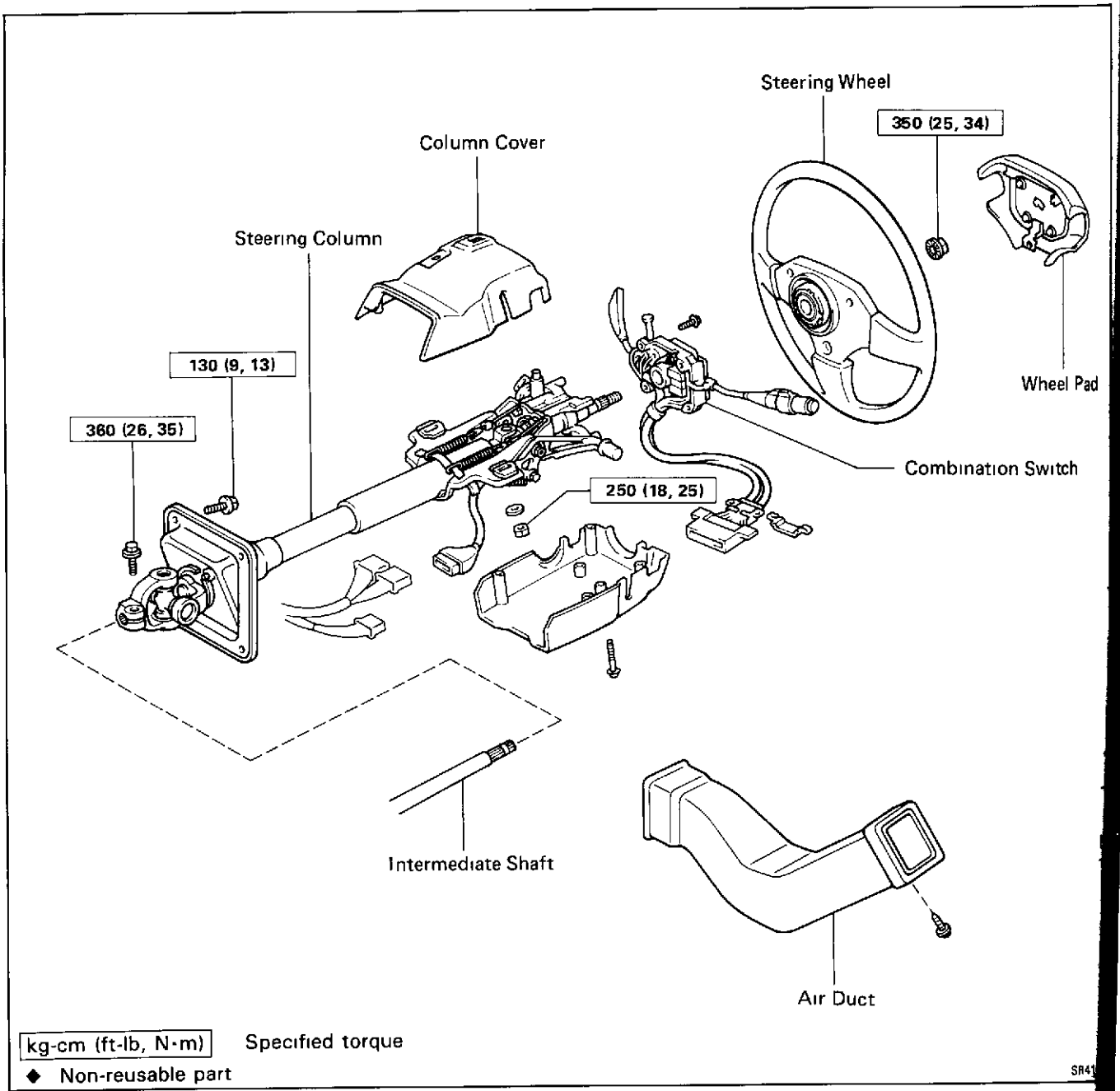

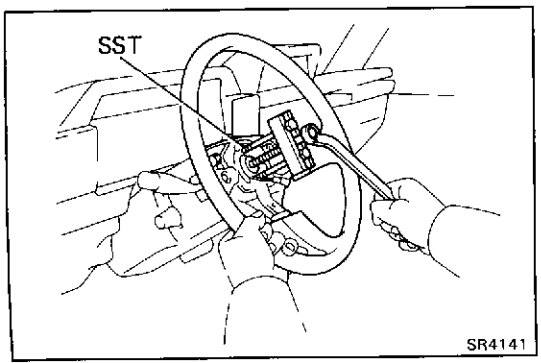

(MAIN POINT OF REMOVAL)

1. REMOVE STEERING WHEEL

Using SST, remove the steering wheel.

SST 09609-20011

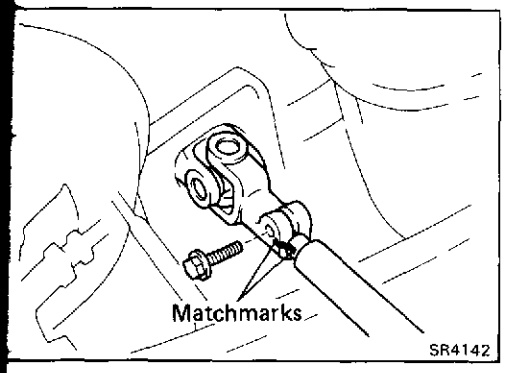

2. DISCONNECT UNIVERSAL JOINT

(a) Place matchmarks on the intermediate shaft and the universal joint.

(b) Disconnect the universal joint from the intermediate shaft.

Tilt Steering Column

COMPONENTS

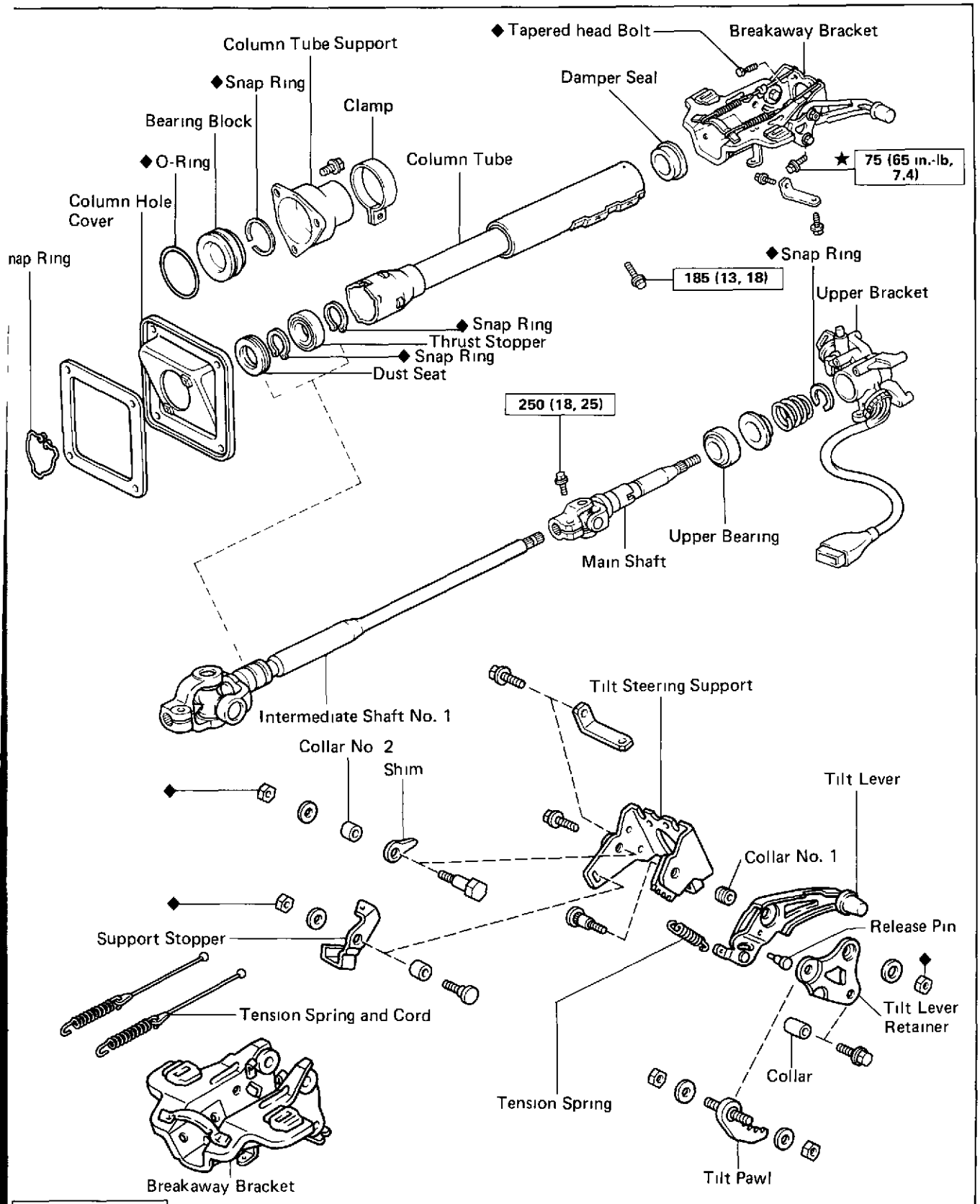

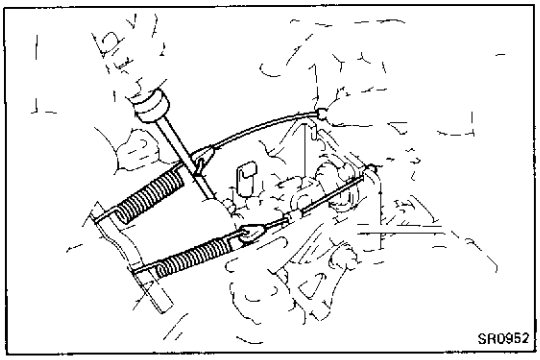

DISASSEMBLY OF STEERING COLUMN

(See page SR-9)

1. REMOVE TENSION SPRINGS AND CORDS

(a) Fully tilt the main shaft upward.

(b) Release the cord from the hook.

(c) Using a screwdriver, pry out the cord tip and remove the spring and cord.

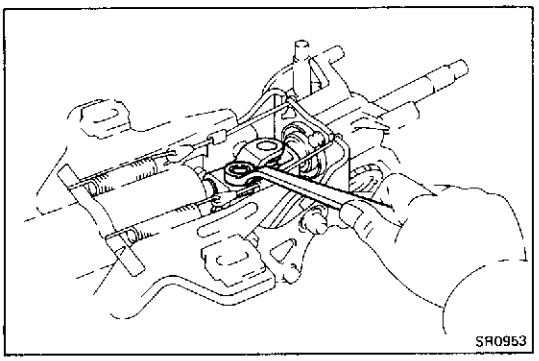

2. DISCONNECT INTERMEDIATE SHAFT FROM MAIN SHAFT

(a) Place matchmarks on the intermediate shaft and universal joint.

(b) Remove the bolt

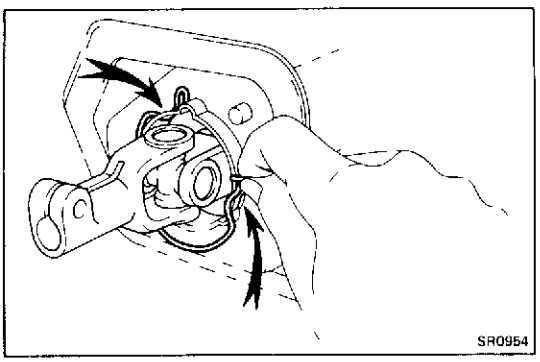

(c) Remove the snap ring.

(d) Pull out the intermediate shaft from the main shaft

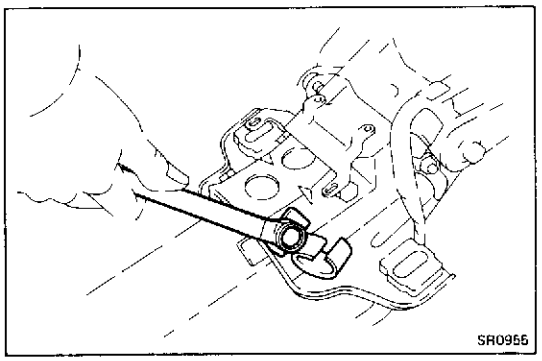

3. REMOVE COLUMN TUBE FROM BREAKAWAY BRACKET

Remove the four bolts with a clamp.

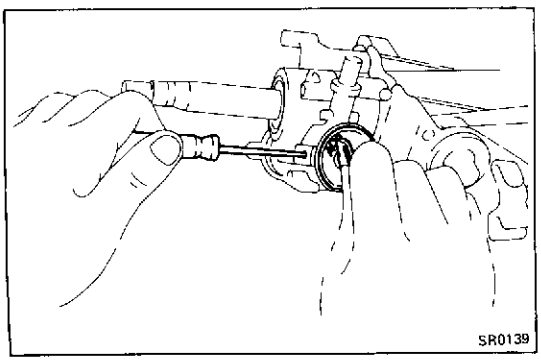

4. REMOVE IGNITION KEY CYLINDER

(a) Place the ignition key at the "ACC" position.

(b) Push down the stop key with a thin rod, and pull out the key cylinder

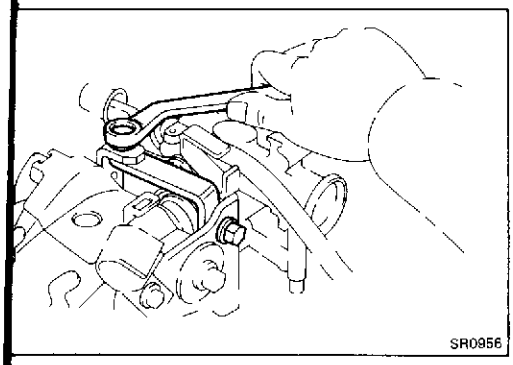

5. REMOVE UPPER BRACKET WITH MAIN SHAFT FROM BREAKAWAY BRACKET

(a) Remove the support reinforcement with two bolts.

(b) Loosen the broken bolt by tapping the chisel.

(c) Remove the three bolts.

(d) Disconnect the upper bracket from the breakaway bracket

6. REMOVE IGNITION SWITCH

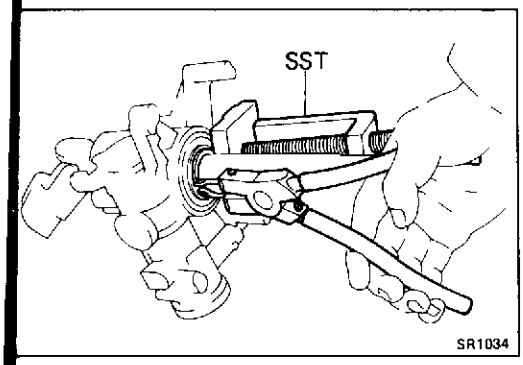

7. REMOVE MAIN SHAFT FROM UPPER BRACKET

(a) Using SST, compress the main shaft and upper bracket.

SST 09950-20017

NOTICE: Do not tighten the SST too tightly.

(b) Using snap ring pliers, remove the snap ring.

(c) Loosen SST and remove the main shaft, spring and collar from the upper bracket.

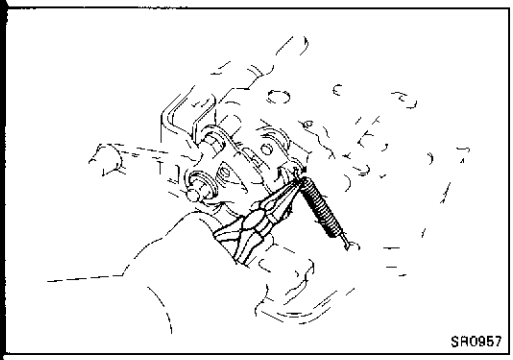

8. DISASSEMBLE TILT STEERING SUPPORT AND BREAKAWAY BRACKET

(a) Remove the tension spring.

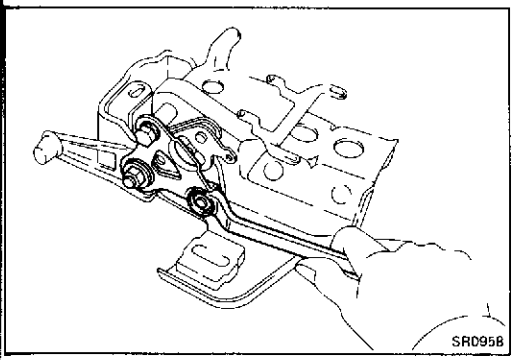

(b) Remove the two nuts and bolt.

(c) Remove the tilt lever retainer and collar.

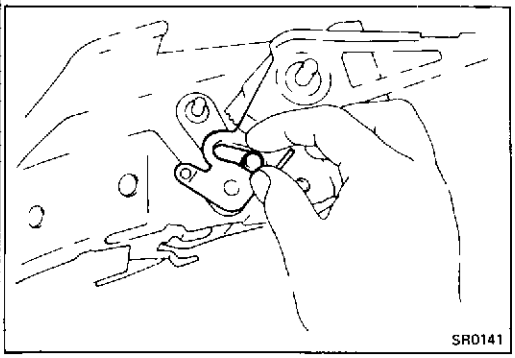

(d) Remove the release pin.

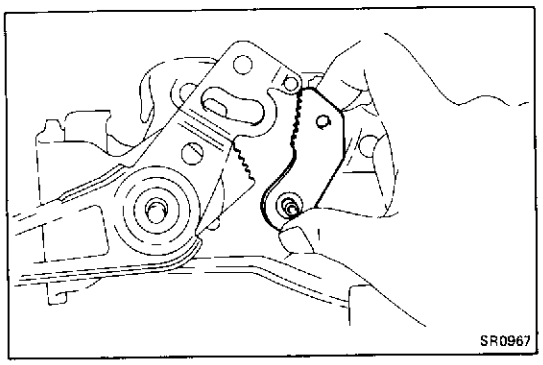

(e) Remove the tilt steering pawl.

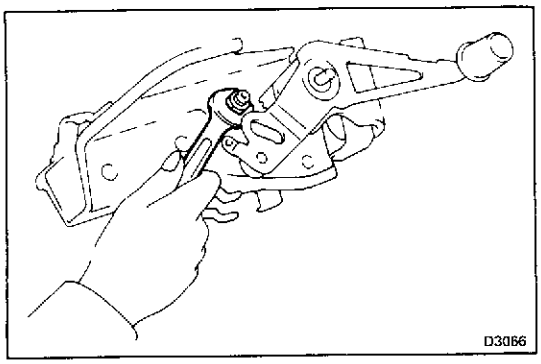

(f) Remove the tilt pawl set bolt.

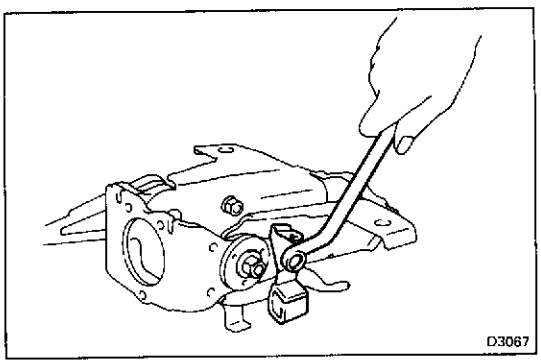

(g) Remove the nut and support stopper bolt with clamp.

(h) Remove the tilt lever set nut.

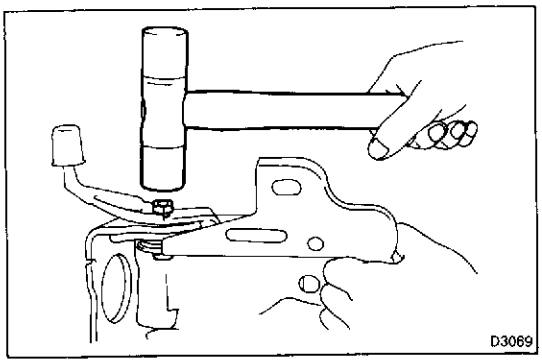

(i) Temporarily install the nut flat with the end of t bolt and tap it with a hammer.

(j) Remove the nut.

(k) Remove the collar and shim.

(l) Remove the another set bolt, nut and collar.

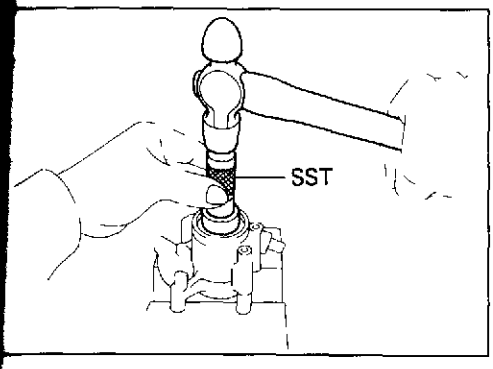

INSPECTION AND REPLACEMENT OF STEERING COLUMN

1. IF NECESSARY, REPLACE BEARING IN UPPER BRACKET

(a) Using SST and a hammer, remove the bearing.

SST 09620-30010 (09623-30010)

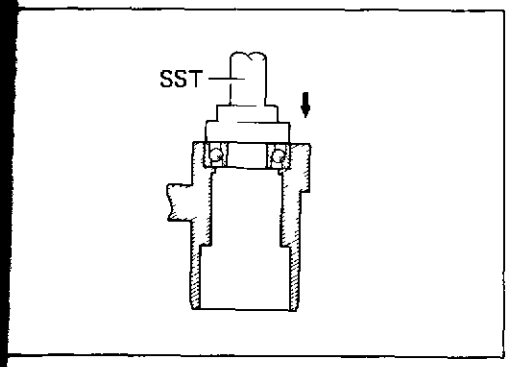

(b) Pack MP grease into the bearing.

(c) Using SST and a hammer, drive the bearing into the bracket.

SST 09620-30010 (09624-30010, 09631-00020)

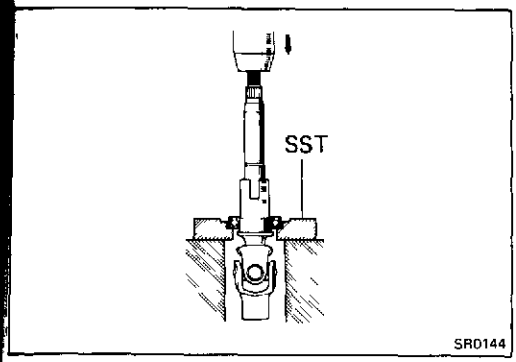

2. IF NECESSARY, REPLACE LOWER BEARING

(a) Using SST and a press, remove the lower bearing from the main shaft.

SST 09527-20011

(b) Pack MP grease into the bearing.

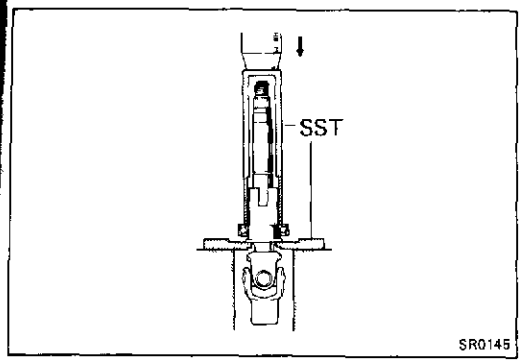

(c) Using SST and a press, assemble the lower bearing and main shaft.

SST 09236-00101 (09237-00010) and 09612-22011

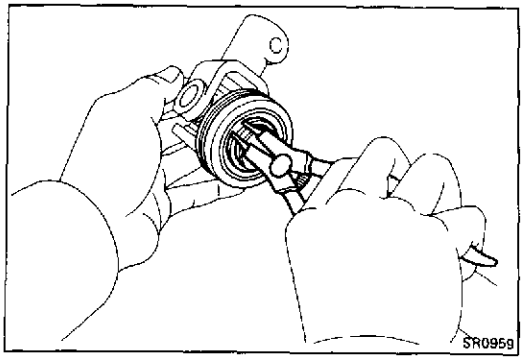

3. IF NECESSARY, REPLACE INTERMEDIATE SHAFT BEARING

(a) Using snap ring pliers, remove the snap ring.

(b) Pull out the bearing from the intermediate shaft.

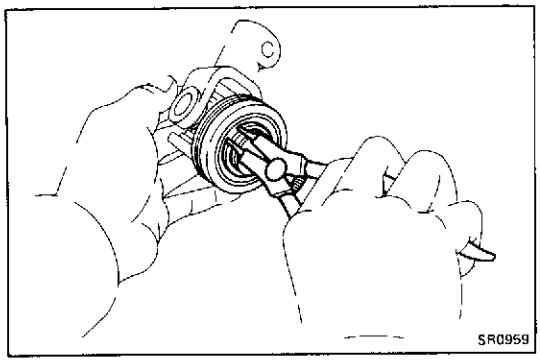

(c) Install the bearing.

(d) Using snap ring pliers, install the snap ring.

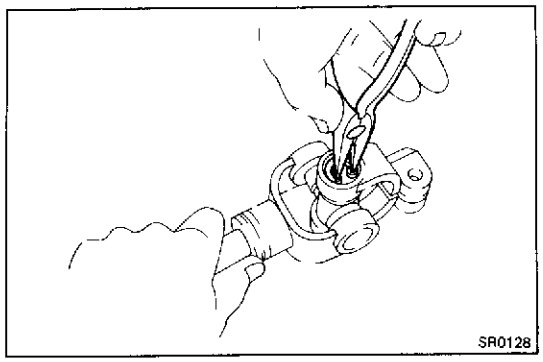

4. IF NECESSARY, REPLACE SPIDER BEARING

(a) Using needle-nose pliers, remove the four snap rings

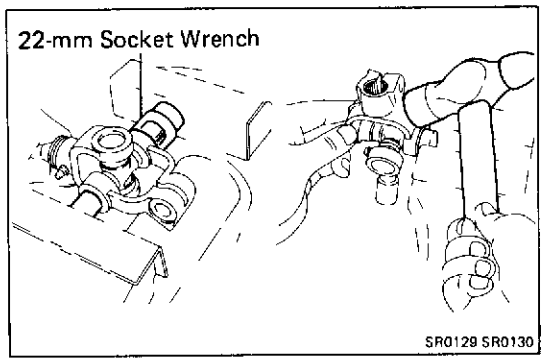

(b) Using a 12-mm and 22-mm socket wrench and vise, press out the yoke side outer race.

(c) Clamp the outer race in a vise and tap off the yoke with a hammer.

HINT: Remove the other bearing races in the same procedure.

(d) Apply molybdenum disulphide lithium base grease to the spider and bearings.

HINT: Be careful not to apply too much grease.

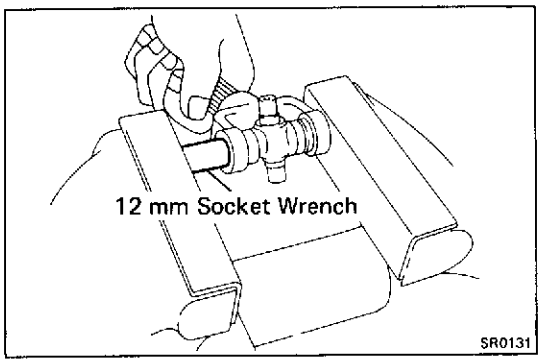

(e) Using a 12-mm socket wrench and vise, press the bearing outer race.

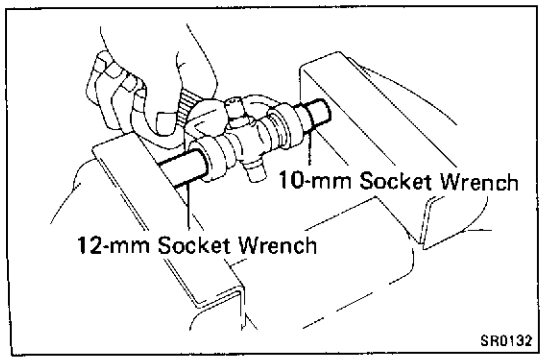

(f) Using a 10-mm and 12-mm socket wrench, adjust both bearings so that the snap ring grooves are maximum and equal widths.

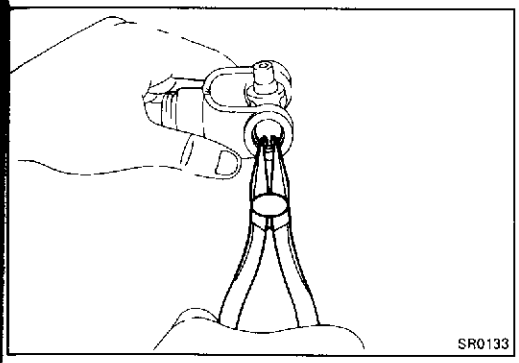

(g) Select two snap rings of the same thickness, which will allow 0 – 0.05 mm (0 – 0.0020 in.) of axial play.

HINT: Do not reuse the snap rings.

Snap ring thickness

Mark	Thickness	mm (in.)
None	1.175 – 1.225	(0.0463 – 0.0482)
Brown	1.225 – 1.275	(0.0482 – 0.0502)
Blue	1.275 – 1.325	(0.0502 – 0.0522)

(h) Using needle-nose pliers, install the snap rings.

HINT: Install the bearing outer races in the yoke side using the same procedure.

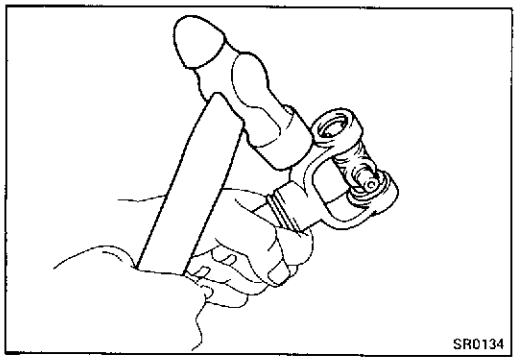

(i) Using a hammer, tap the shaft and yoke until the clearance between the bearing outer race and snap ring is zero.

(j) Check the spider bearing.

- Check that the spider bearing moves smoothly.
- Check the spider bearing axial play.

Bearing axial play: 0.05 mm (0.0020 in.) or less

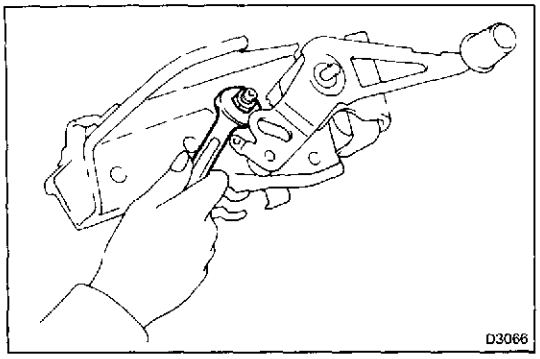

ASSEMBLY OF STEERING COLUMN

(See page SR-6)

1. COAT ALL RUBBING PARTS WITH MP GREASE
2. ASSEMBLE PAWL SET BOLT

   Torque: 185 kg-cm (13 ft-lb, 18 N·m)

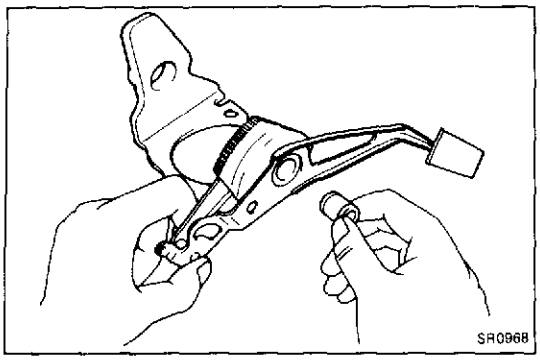

3. ASSEMBLE TILT LEVER TO SUPPORT

   (a) Select a collar No. 1 which will eliminate play.

Outer diameter	mm (in.)
17 989 – 17 996	(0.7082 – 0.7085)
17 996 – 18.003	(0.7085 – 0.7088)
18 003 – 18.010	(0.7088 – 0.7091)
18.010 – 18.017	(0.7091 – 0.7093)
18 017 – 18 024	(0.7093 – 0.7096)

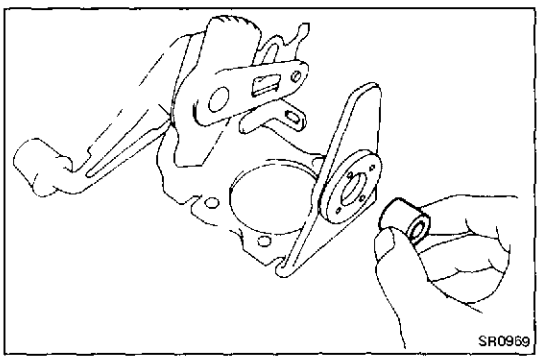

   (b) Install tilt lever and collar No. 1 to the support.

   (c) Select a collar No. 2 which will eliminate all play.

Outer diameter	mm (in.)
17 982 – 18.000	(0.7080 – 0.7087)
18 000 – 18.018	(0.7087 – 0.7094)

   (d) Install collar No. 2 to the support.

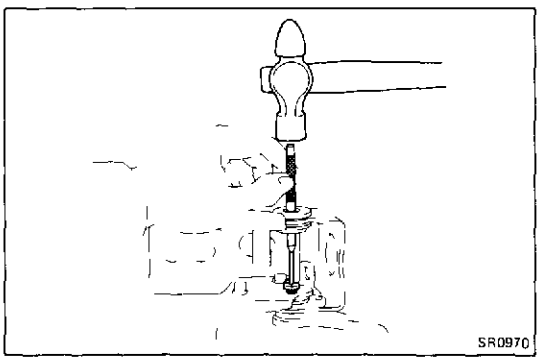

   (e) Drive in the serration bolt to the support.

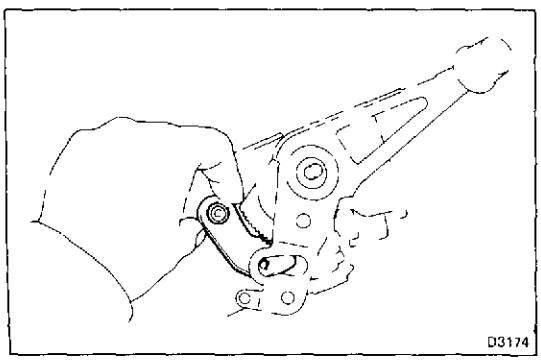

   (f) Install the tilt pawl.

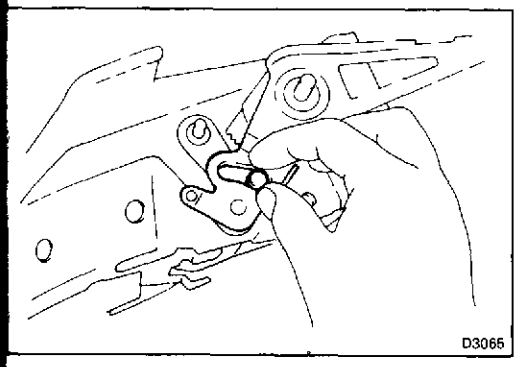

(g) Install the tension spring and the release pin.

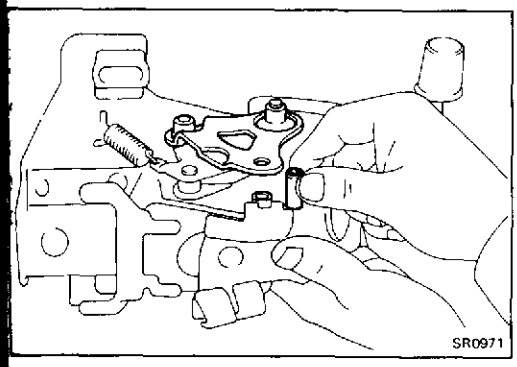

(h) Assemble the collar and tilt lever retainer.

Torque: 185 kg-cm (13 ft-lb, 18 N·m)

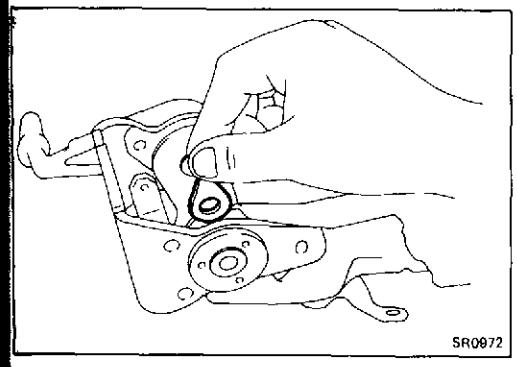

4. INSTALL SHIM, BOLT AND NUT

(a) Select a shim which fits snugly when pressed in by hand.

Mark	Thickness	mm (in.)
None	0.197 – 0.203	(0.0078 – 0.0080)
5	0.495 – 0.505	(0.0195 – 0.0199)
8	0.795 – 0.805	(0.0313 – 0.0317)
14	1.395 – 1.405	(0.0549 – 0.0553)
18	1.795 – 1.805	(0.0707 – 0.0711)

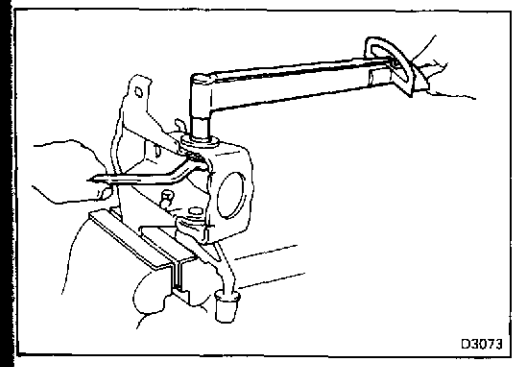

(b) Install the shim, bolt, washer and a lock nut.

Torque: 185 kg-cm (13 ft-lb, 18 N·m)

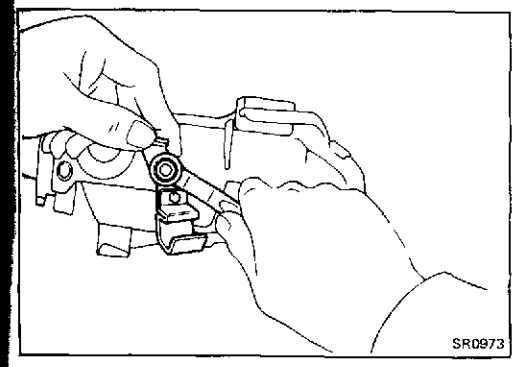

5. INSTALL TILT STEERING SUPPORT STOPPER BOLT

(a) Install the stopper bolt, bracket, washer and nut.

(b) Tighten the nut by holding the bracket as shown.

Torque: 100 kg-cm (7 ft-lb, 10 N·m)

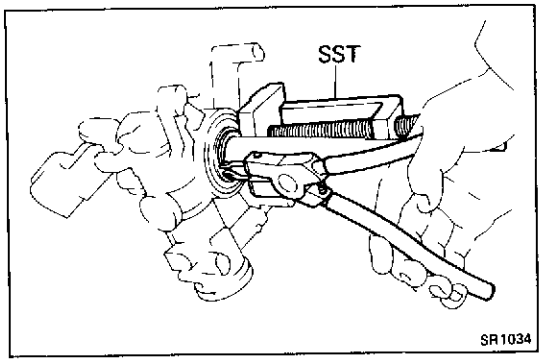

6. ASSEMBLE MAIN SHAFT AND UPPER BRACKET

(a) Assemble the collar, spring and main shaft, and insert them into the bracket.

(b) Using SST and snap ring pliers, install the snap ring by compressing the main shaft and upper bearing.

SST 09950-20017

NOTICE: Do not tighten the SST more than necessary

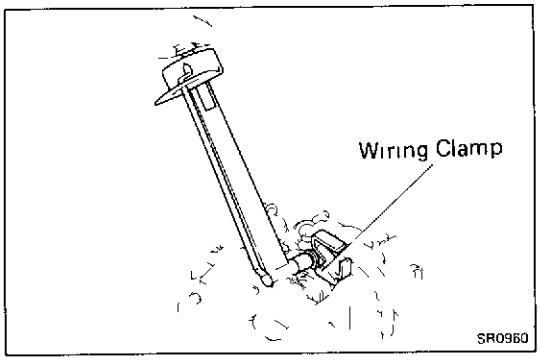

7. ASSEMBLE UPPER BRACKET AND SUPPORT

(a) Apply sealant to one or two threads of the bolt end.

Sealant: Part No. 08833-00070, Three bond 1324 or equivalent

HINT. This adhesive will not harden while exposed to air. It will act as a sealer or binding agent only when applied to threads, etc. and the air is cut off.

(b) Install the two bolts, one with a wiring clamp

Torque: 75 kg-cm (65 in.-lb, 7.4 N·m)

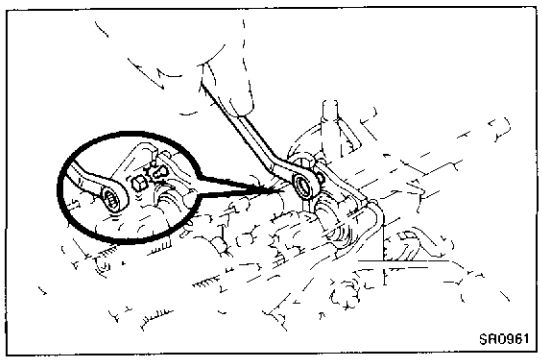

(c) Install the break down bolt and tighten until the bolt head breaks off.

(d) Install the support reinforcement.

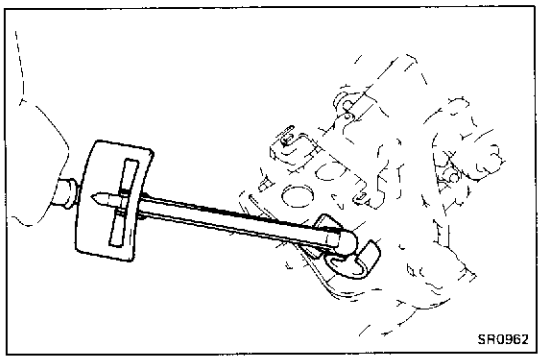

8. INSTALL BREAKAWAY BRACKET TO COLUMN TUBE

Torque: 185 kg-cm (13 kg-cm, 18 N·m)

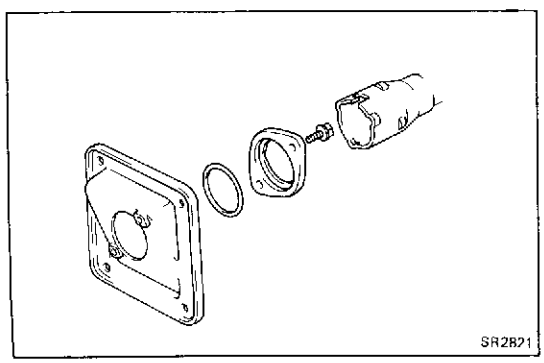

9. INSTALL COLUMN HOLE COVER TO COLUMN TUBE

Install the following parts on the column.

- Hole cover plate
- New O-ring
- Column hole cover

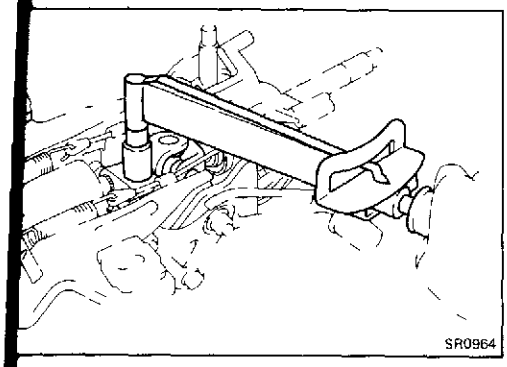

10. CONNECT MAIN SHAFT AND INTERMEDIATE SHAFT

(a) Align the marks on the joint yoke and intermediate shaft and tighten the bolt

Torque: 250 kg-cm (18 ft-lb, 25 N·m)

HINT: Be careful not to push out the damper seal while installing the intermediate shaft.

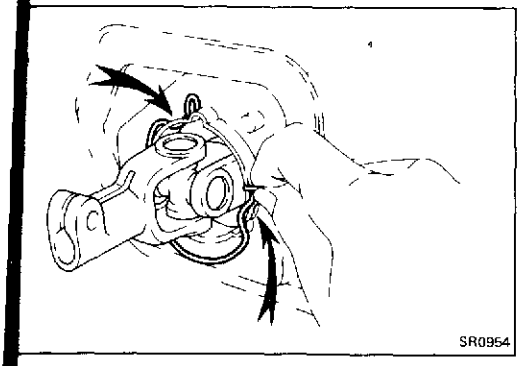

(b) Install the snap ring.

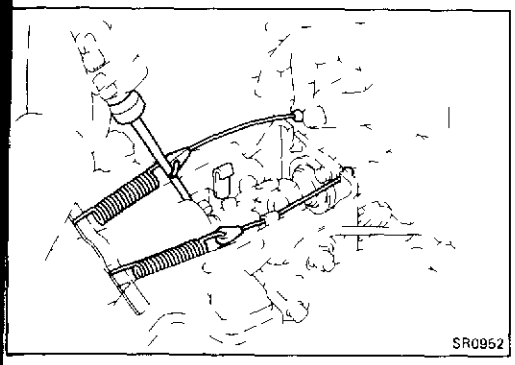

11. INSTALL TWO SPRINGS AND TWO CORDS

(a) Connect the tension spring and cord, and hook the spring to the hanger.

(b) Pry the spring end and hook the cord end to the support.

(c) Hook the cord to the cord guides.

12. CHECK OPERATION OF TILT STEERING LEVER AND SUPPORT

(a) Check that there is no axial or horizontal play at the end of the main shaft.

(b) Check that the main shaft locks securely in all six positions.

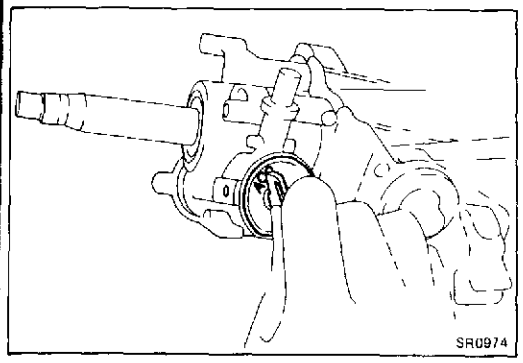

13. INSTALL IGNITION SWITCH

(a) Turn the ignition key plate to the "ACC" position and install the key cylinder into the upper bracket.

(b) Install the ignition switch.

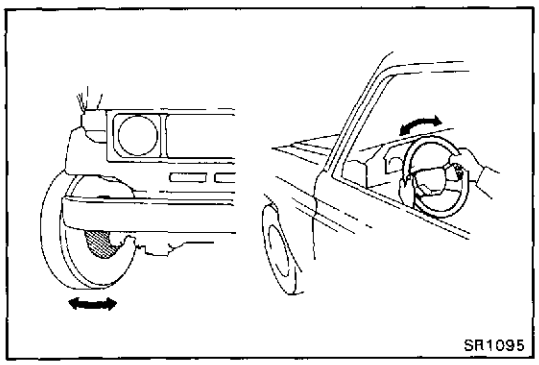
SR1095

FLUID LEVEL CHECK

1. **KEEP VEHICLE LEVEL**

2. **BOOST FLUID TEMPERATURE**

   With the engine idling at 1,000 rpm or less, turn the steering wheel from lock to lock several times to boost fluid temperature

   Fluid temperature: 80°C (176°F)

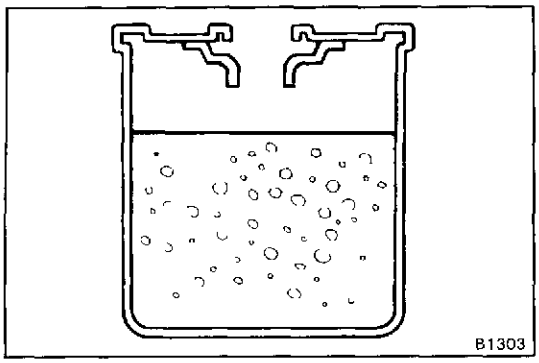
B1303

3. **CHECK FOR FOAMING OR EMULSIFICATION**

   HINT: Foaming and emulsification indicate either the existence of air in the system or that the fluid level is too low.

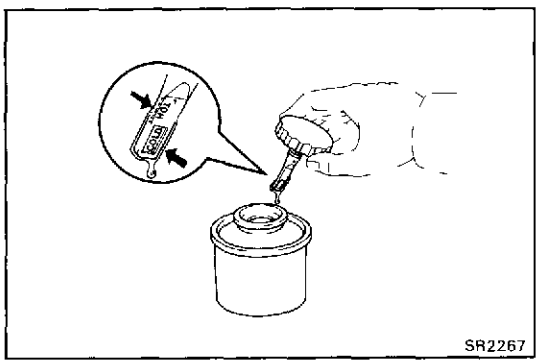
SR2267

4. **CHECK FLUID LEVEL IN RESERVOIR**

   Check the fluid level and add fluid if necessary.

   Fluid: ATF DEXRON® II

   HINT. Check that the fluid level is within the HOT LEVEL of the dipstick. If the fluid is cold, check that it is within the COLD LEVEL of the dipstick.

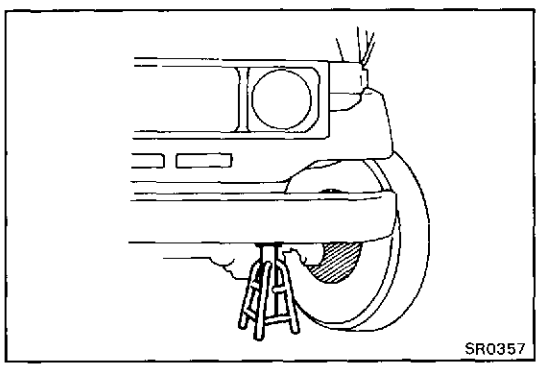
SR0357

REPLACEMENT OF POWER STEERING FLUID

1. **JACK UP FRONT OF VEHICLE AND SUPPORT IT WITH STANDS**

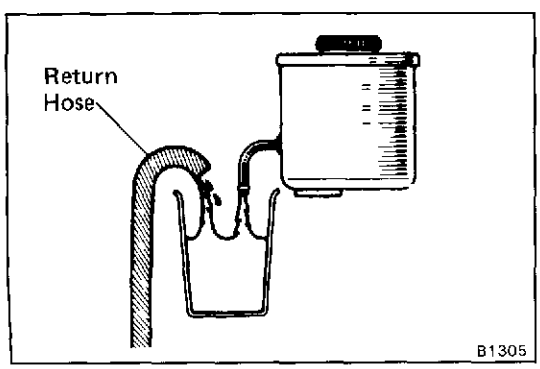

B1305

2. **REMOVE FLUID RETURN HOSE FROM RESERVOIR TANK AND DRAIN FLUID INTO CONTAINER**

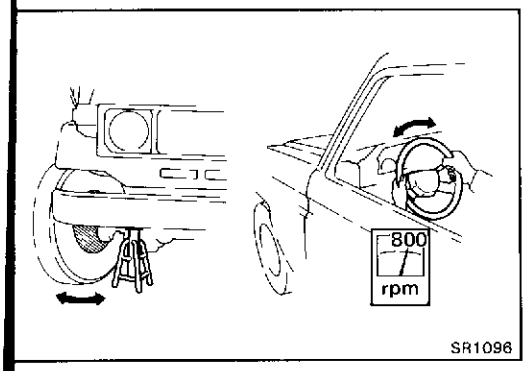

SR1096

3. **TURN STEERING WHEEL FROM LOCK TO LOCK WHILE DRAINING FLUID**

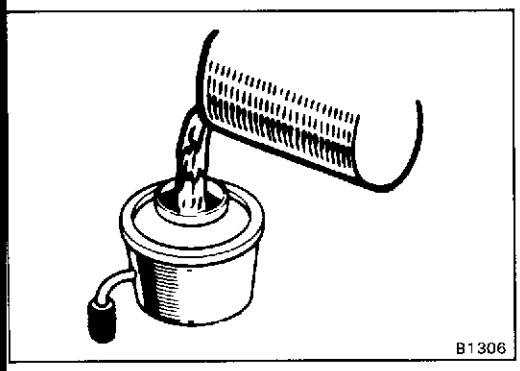
B1306

4. **FILL RESERVOIR TANK WITH FRESH FLUID**

Fluid : ATF DEXRON® II

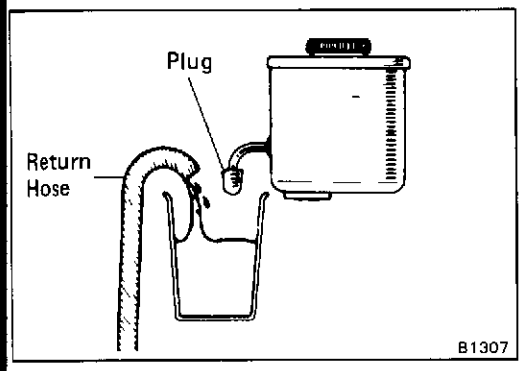

B1307

5. **START ENGINE AND RUN IT AT 1,000 RPM**

After 1 or 2 seconds, fluid will begin to discharge from the return hose Stop the engine immediately at this time.

NOTICE: Take care that some fluid remains left in the reservoir tank.

6. **REPEAT STEPS 4 AND 5 FOUR OR FIVE TIMES UNTIL THERE IS NO MORE AIR IN FLUID**

7. **CONNECT RETURN HOSE TO RESERVOIR TANK**

8. **BLEED POWER STEERING SYSTEM**

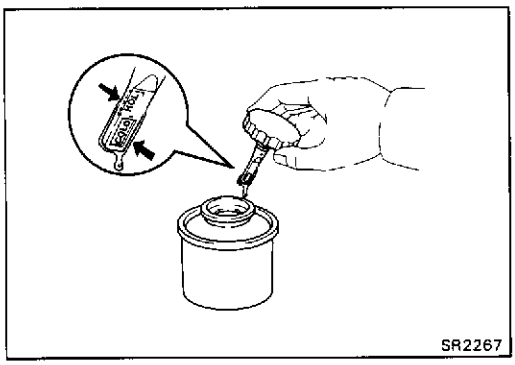
SR2267

BLEEDING OF POWER STEERING SYSTEM

1. **CHECK FLUID LEVEL IN RESERVOIR TANK**

Check the fluid level and add fluid if necessary.

Fluid: ATF DEXRON® II

HINT: Check that the fluid level is within the HOT LEVEL of the dipstick. If the fluid is cold, check that it is within the COLD LEVEL of the dipstick.

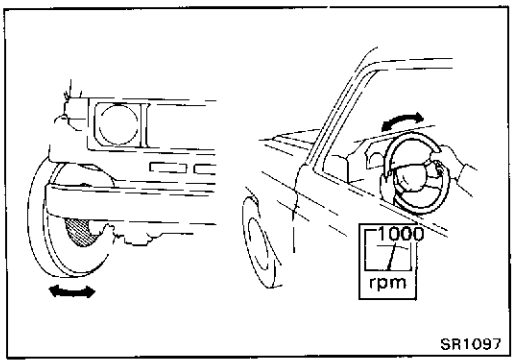

SR1097

2. **START ENGINE AND TURN STEERING WHEEL FROM LOCK TO LOCK THREE OR FOUR TIMES**

With the engine speed below 1,000 rpm, turn the steering wheel to left or right full lock and keep it there for 2 — 3 seconds, then turn the wheel to the reverse full lock and keep it there for 2 — 3 seconds

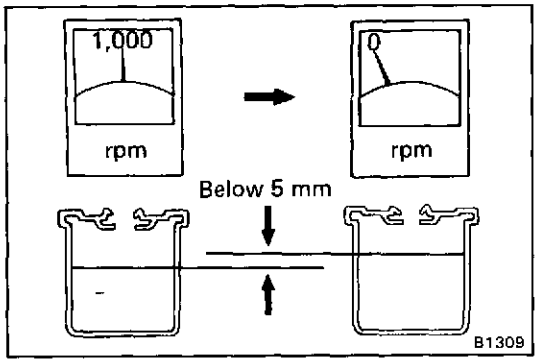

3. **CHECK THAT FLUID IN RESERVOIR IS NOT FOAMY OR CLOUDY AND DOES NOT RISE OVER MAXIMUM WHEN ENGINE IS STOPPED**

Measure the fluid level with the engine running. Stop the engine and measure the fluid level.

Maximum rise: 5 mm (0.20 in.)

If a problem is found, repeat steps 4 and 5 on page SR-35.

Repair the PS if the problem persists

OIL PRESSURE CHECK

1. **CONNECT PRESSURE GAUGE**

(a) Using SST, disconnect the pressure line joint.

SST 09631-22020

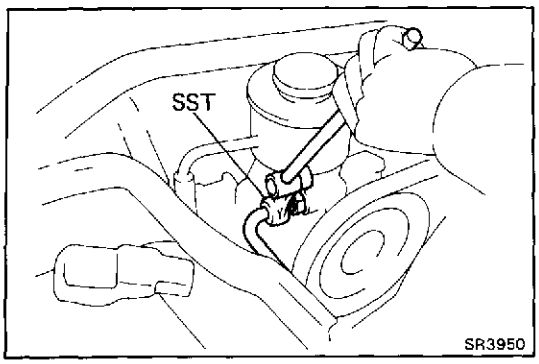

(b) Connect the gauge side of the pressure gauge to the PS pump side and the valve side to the pressure line side.

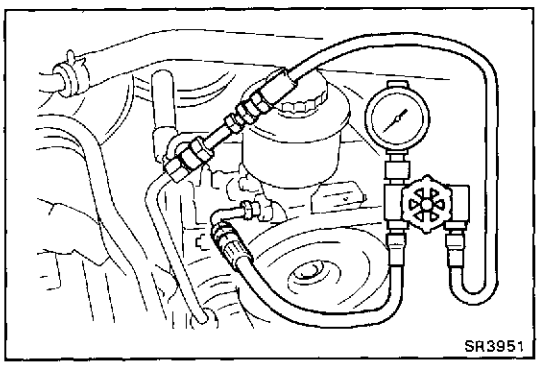

(c) Bleed the system. Start the engine and turn the steering wheel from lock to lock two or three times.

(d) Check that the fluid level is correct.

2. **CHECK THAT FLUID TEMPERATURE IS AT LEAST 80° (176°F)**

3. **START ENGINE AND RUN IT AT IDLE**

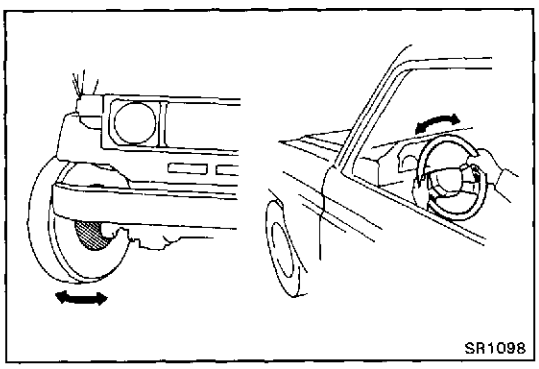

4. **CHECK FLUID PRESSURE READING WITH VALVE CLOSED**

Close the pressure gauge valve and observe the reading on the gauge

Minimum pressure: **FJ Series**
80 kg/cm² (1,138 psi, 7,845 kPa)
HZJ and PZJ Series
85 kg/cm² (1,209 psi, 8,336 kPa)
LJ and RJ Series
75 kg/cm² (1,067 psi, 7,355 kPa)

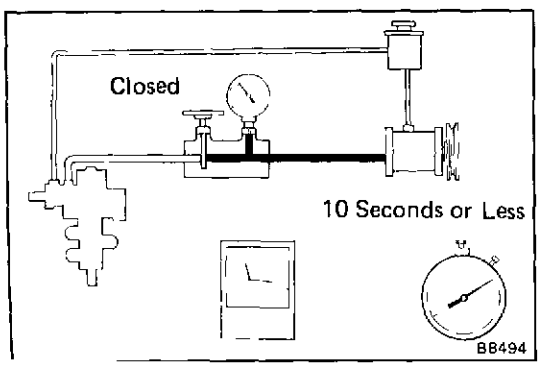

NOTICE:

- **Do not keep the valve closed for more than 10 seconds.**
- **Do not let the fluid temperature become too high.**

If pressure is low, repair or replace the PS pump.

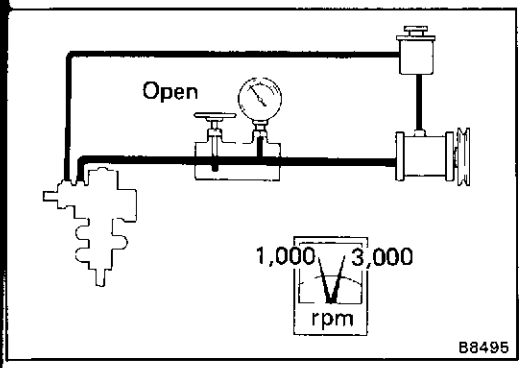

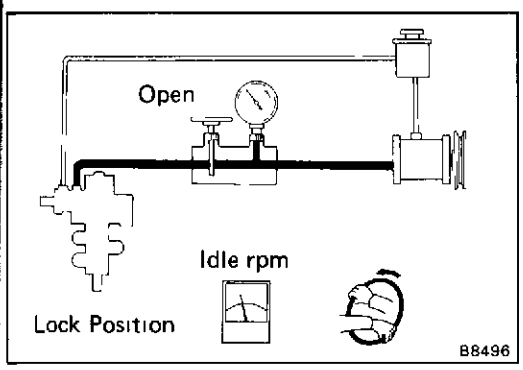

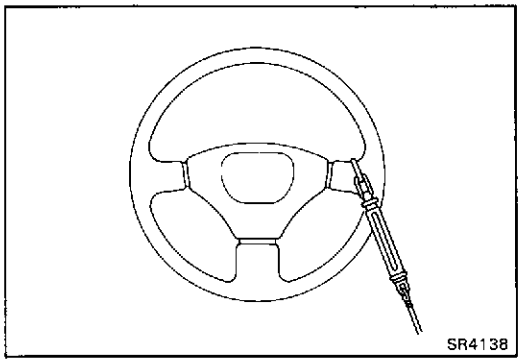

5. **OPEN VALVE FULLY**

6. **CHECK AND RECORD PRESSURE READING AT 1,000 RPM**

7. **CHECK AND RECORD PRESSURE READING AT 3,000 RPM**

Check that there is 5 kg/cm^2 (71 psi, 490 kPa) or less difference in pressure between the 1,000 rpm and 3,000 rpm checks.

If the difference is excessive, repair or replace the flow control valve of the PS pump.

8. **CHECK PRESSURE READING WITH STEERING WHEEL TURNED TO FULL LOCK**

Be sure the pressure gauge valve is fully opened and the engine idling

Minimum pressure: **FJ Series**
80 kg/cm^2 (1,138 psi, 7,845 kPa)
HZJ and PZJ Series
85 kg/cm^2 (1,209 psi, 8,336 kPa)
LJ and RJ Series
75 kg/cm^2 (1,067 psi, 7,355 kPa)

NOTICE:
- **Do not maintain lock position for more than 10 seconds.**
- **Do not let the fluid temperature become too high.**

If pressure is low, the gear housing has an internal leak and must be repaired or replaced.

9. **MEASURE STEERING EFFORT**

(a) Center the steering wheel and run the engine at idle.

(b) Using a spring scale, measure the steering effort in both directions

Maximum steering effort: 4 kg (8.8 lb, 39 N)

If steering effort is excessive, repair the power steering unit.

HINT: Be sure to consider tire type, pressure and contact surface before making your diagnosis.

Power Steering Pump

REMOVAL AND INSTALLATION OF POWER STEERING PUMP

Remove and install the parts as shown.

FJ Series

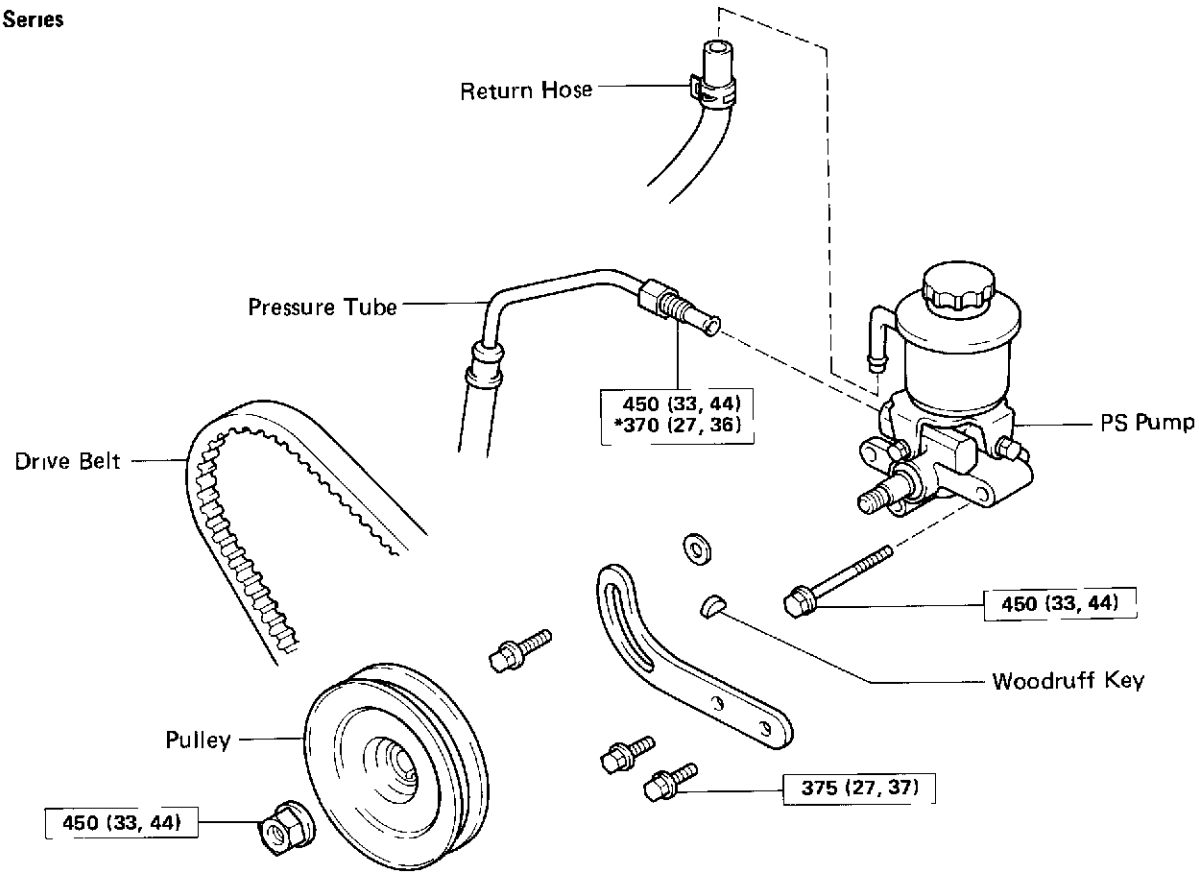

5R3

HZJ and PZJ Series

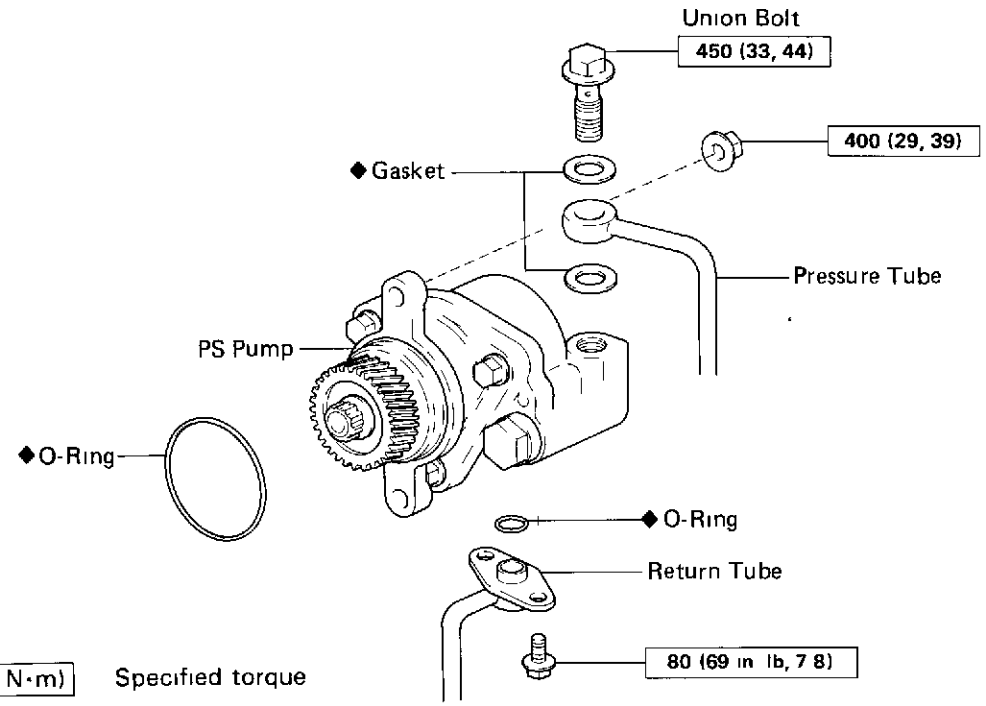

kg-cm (ft-lb, N·m) Specified torque

◆ Non-reusable part

* For use of SST

J and RJ Series

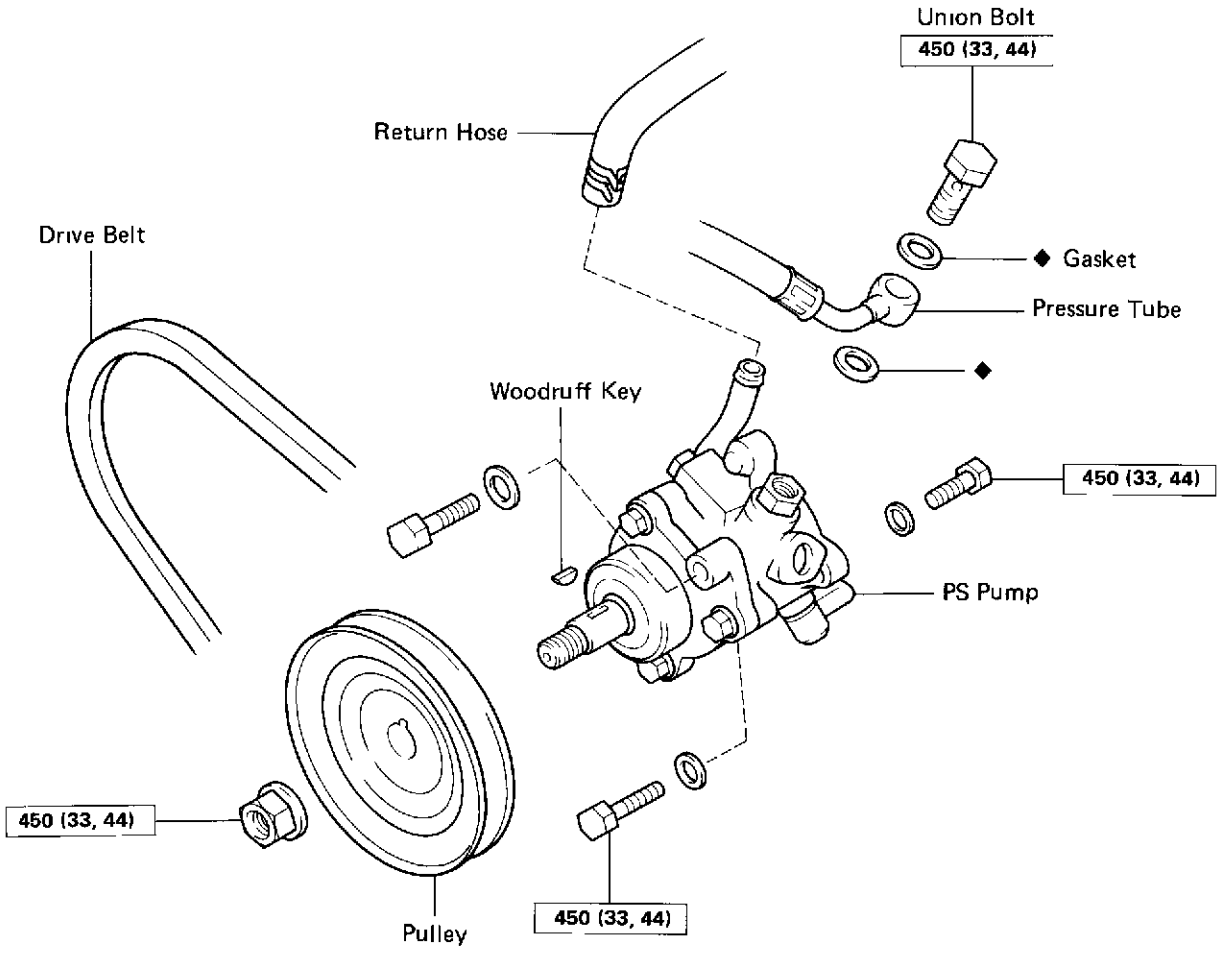

kg-cm (ft-lb, N·m) : Specified torque
◆ Non-reusable part

SR4145

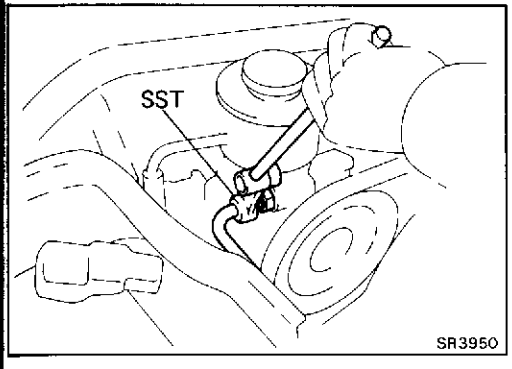

SR3950

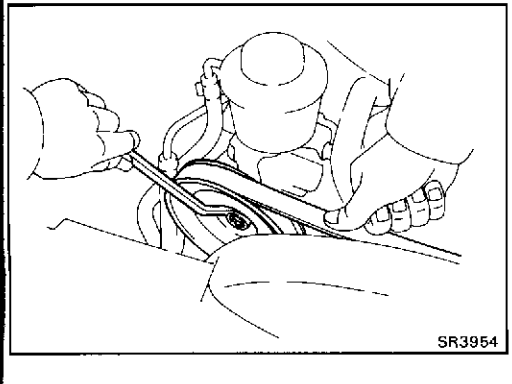

SR3954

(MAIN POINT OF REMOVAL AND INSTALLATION)

1. **(FJ Series)**
DISCONNECT AND CONNECT PRESSURE TUBE

Using SST, disconnect and connect the pressure tube from/to the PS pump.

SST 09631-22020

Torque: 370 kg-cm (27 ft-lb, 36 N·m)

HINT: Use a torque wrench with a fulcrum length of 300mm (11.81 in.).

2. **(Ex. HZJ and PZJ Series)**
LOOSEN PULLEY NUT

Push on the drive belt with your hand to hold the pulley in place and loosen the pulley nut.

3. **(Ex. HZJ and PZJ Series)**
ADJUST DRIVE BELT TENSION AFTER INSTALLING PS PUMP
(See page SR-33)

COMPONENTS (LJ and RJ series)

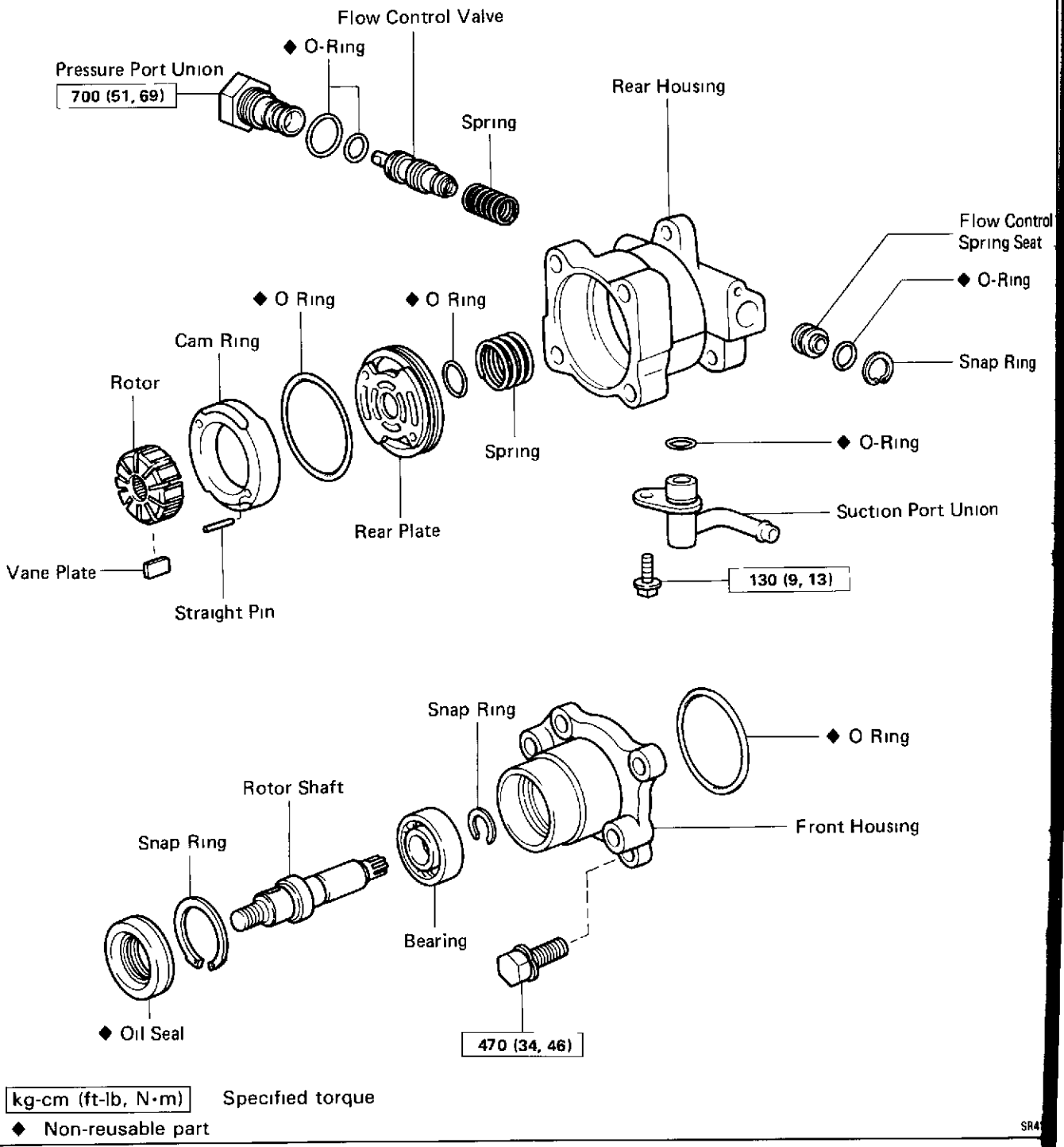

kg-cm (ft-lb, N·m) Specified torque

◆ Non-reusable part

SR4

DISASSEMBLY OF POWER STEERING PUMP

1. **CLAMP PS PUMP IN VISE**

   NOTICE: Do not tighten the vise too tight.

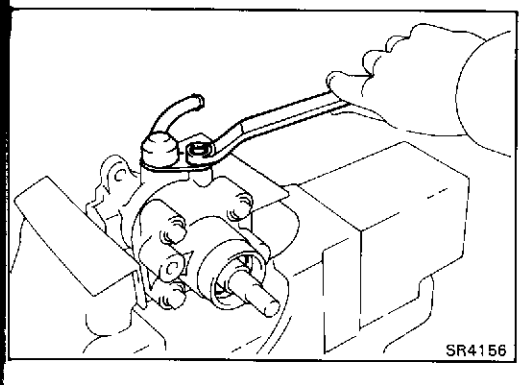

2. REMOVE SUCTION PORT UNION

(a) Remove the bolt and union.

(b) Remove the O-ring from the union.

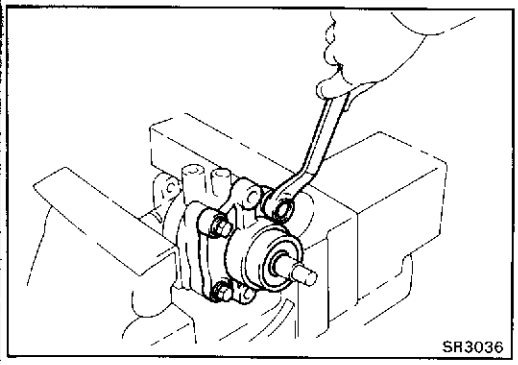

3. REMOVE FOUR FRONT HOUSING BOLTS

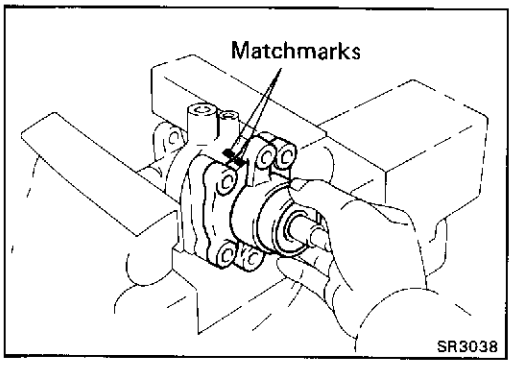

4. REMOVE FRONT HOUSING

(a) Place matchmarks on the front and rear housing

(b) Using a plastic hammer, tap off the front housing.

NOTICE: Be careful that the vane plates, rotor and cam ring do not fall out.

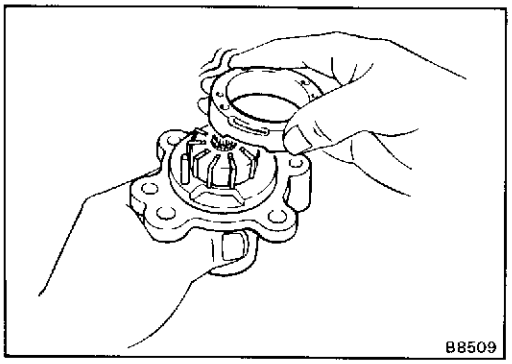

5. REMOVE CAM RING, ROTOR AND VANE PLATES

NOTICE: Be careful not to scratch the cam ring, rotor or vane plates.

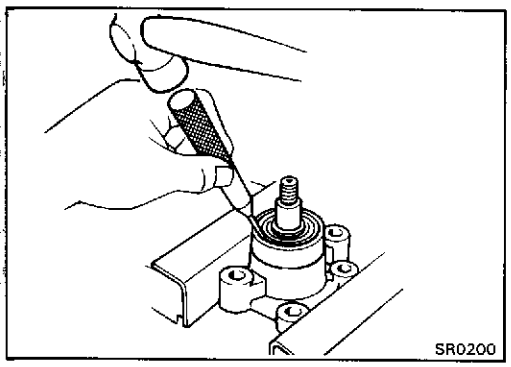

6. REMOVE ROTOR SHAFT

(a) Clamp the front housing in a vise.

NOTICE: Do not tighten the vise too tight.

(b) Using a chisel and hammer, pry off the oil seal.

(c) Using snap ring pliers, remove the snap ring.

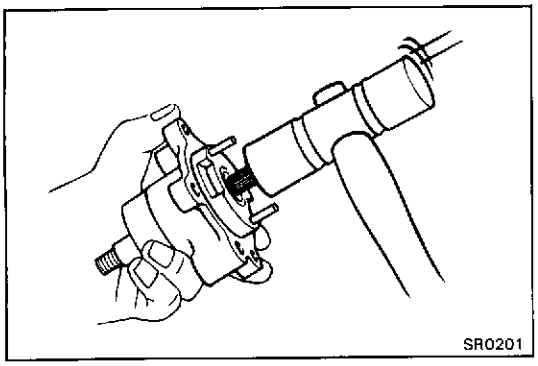
SR0201

(d) Using a plastic hammer, lightly tap the rotor shaft out of the front housing.

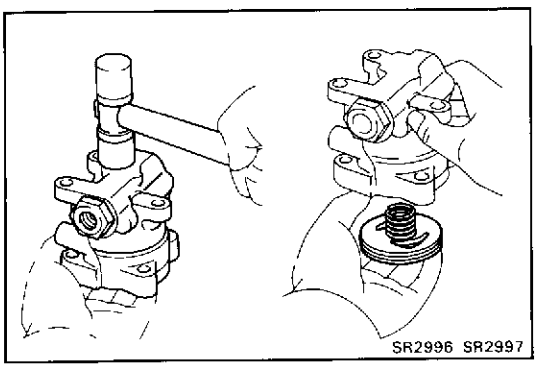
SR2996 SR2997

7. REMOVE REAR PLATE AND SPRING

Using a plastic hammer, tap the bottom end of the rear housing, and remove the rear plate and spring.

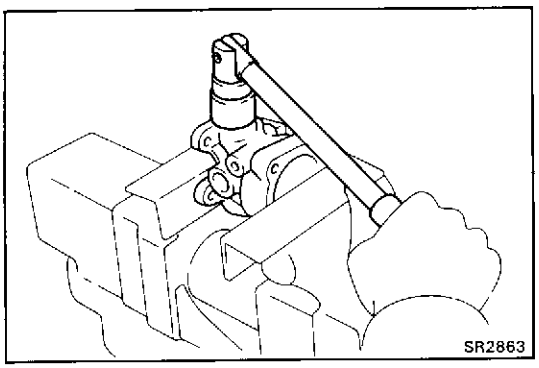
SR2863

8. REMOVE PRESSURE PORT UNION

(a) Remove the pressure port union.

(b) Remove the O-rings from the union and housing

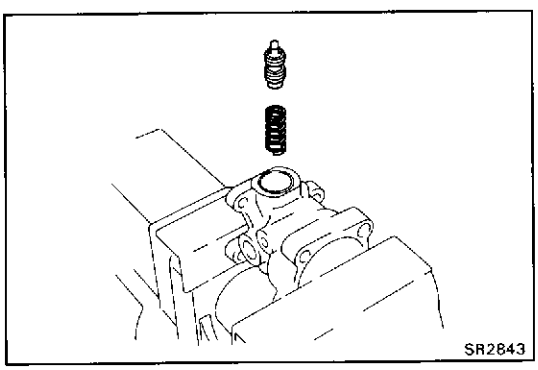
SR2843

(c) Remove the flow control valve and spring.

NOTICE: Use care not to drop, scratch or nick th valve.

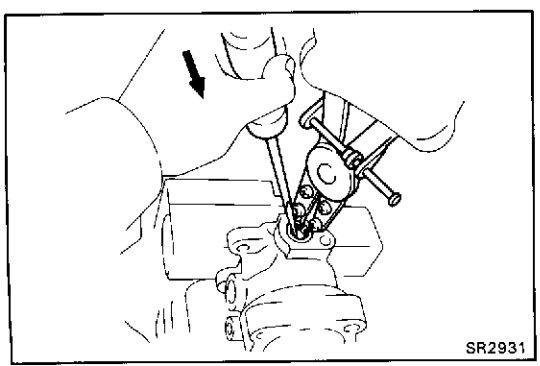
SR2931

9. REMOVE FLOW CONTROL SPRING SEAT

(a) Temporarily install a bolt to the spring seat.

(b) Push the bolt and remove the snap ring with sn ring pliers

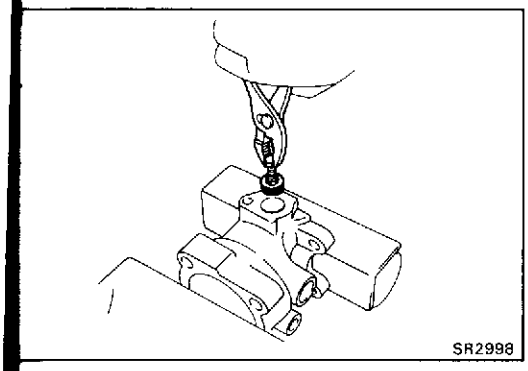
SR2998

(c) Pull out the bolt and remove the spring seat.

(d) Remove the O-ring from the spring seat.

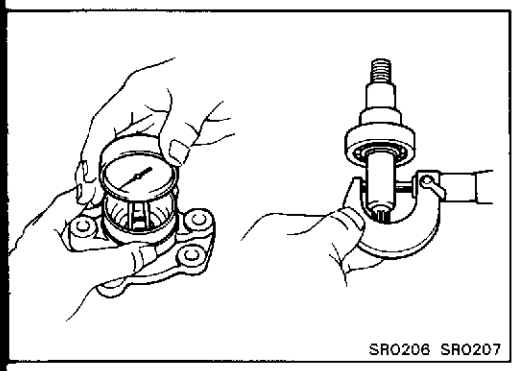
SR0206 SR0207

INSPECTION OF POWER STEERING PUMP

1. INSPECT BUSHING AND MEASURE BUSHING OIL CLEARANCE

(a) Check the bushing for wear or damage. The bushing cannot be replaced separately.

If wear or damage is found, replace entire housing.

(b) Check the oil clearance between the bushing and rotor shaft.

Maximum oil clearance: 0.07 mm (0.0028 in.)

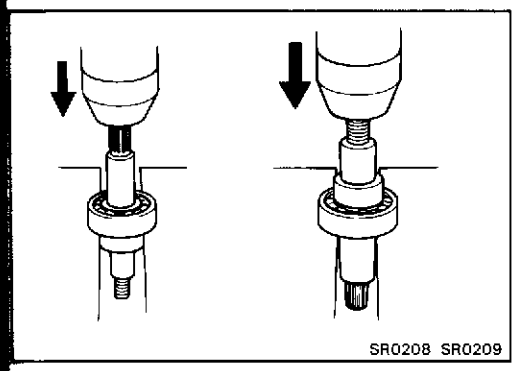
SR0208 SR0209

2. IF NECESSARY, REPLACE ROTOR SHAFT BEARING

(a) Using snap ring pliers, remove the snap ring.

(b) Using a press, press out the bearing.

(c) Using a press, press in a new bearing.

(d) Using snap ring pliers, install the snap ring.

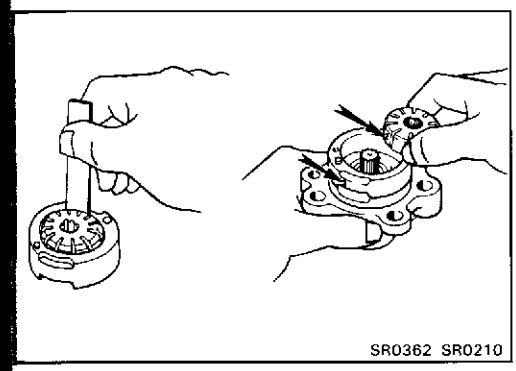
SR0362 SR0210

3. INSPECT ROTOR AND CAM RING

Measure the cam ring thickness. Check that the difference between the rotor and cam ring measurement is less than maximum.

Maximum difference: 0.06 mm (0.0024 in.)

If the difference is excessive, replace the cam ring with one having the same letter as on the rotor.

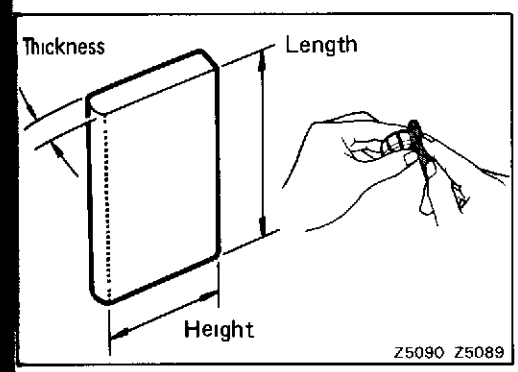

Z5090 Z5089

4. INSPECT AND MEASURE VANE PLATES

(a) Check the vane plates for wear or scratches

(b) Measure the length, height and thickness of the vane plates.

Minimum length: 14.97 mm (0.5894 in.)

Minimum height: 7.8 mm (0.307 in.)

Minimum thickness: 1.7 mm (0.067 in.)

(c) Measure the clearance between the vane plate and rotor groove.

Maximum clearance: 0.06 mm (0.0024 in.)

HINT: There are five vane lengths with the following rotor and cam ring numbers.

Rotor and cam ring number	Vane length mm (in.)
None	14.996 – 14.998 (0.5904 – 0.5905)
1	14.994 – 14.996 (0.5903 – 0.5904)
2	14.992 – 14.994 (0.5902 – 0.5903)
3	14.990 – 14.992 (0.59016 – 0.59024)
4	14.988 – 14.990 (0.5901 – 0.5902)

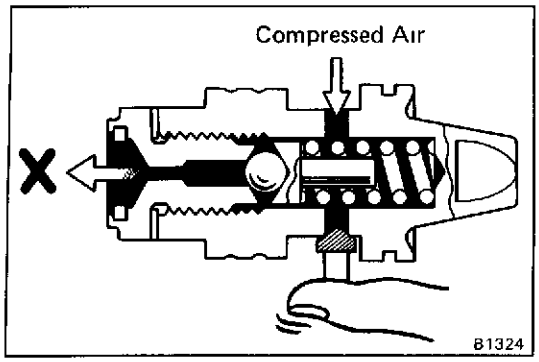

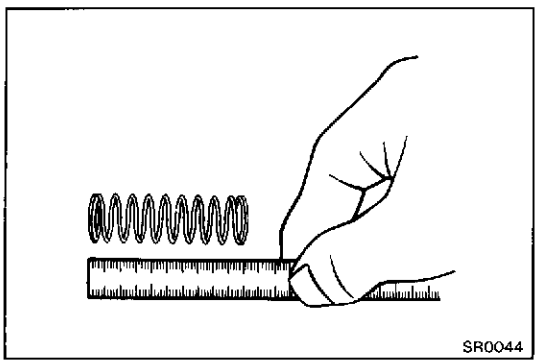

5. INSPECT FLOW CONTROL VALVE

(a) Check the flow control valve for wear or damage.

(b) Apply fluid to the valve and check that it falls smoothly into the valve hole by its own weight.

(c) Check the flow control valve for leakage. Close one of the holes and apply compressed air [4 or 5 kg/cm^2 (57 or 71 psi, 392 or 490 kPa)] into the opposite side, and confirm that air does not come out from the end hole.

If necessary, replace the valve with one having the same letter as inscribed on the rear housing.

6. INSPECT FLOW CONTROL VALVE SPRING

Check that the spring is within specification.

Spring length: 47 – 50 mm (1.85 – 1.97 in.)

If the spring is not within specification, replace it

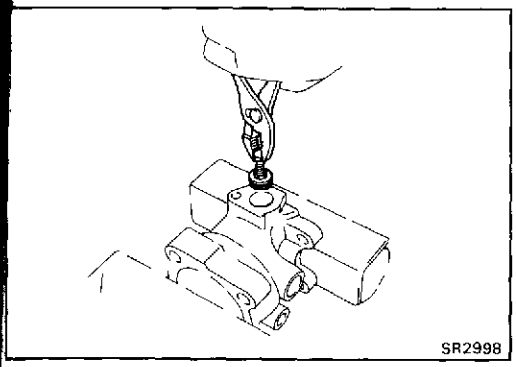
SR2998

ASSEMBLY OF POWER STEERING PUMP

(See page SR-54)

1. INSTALL FLOW CONTROL SPRING SEAT

(a) Install a new O-ring to the spring seat.

(b) Insert the spring seat to the housing.

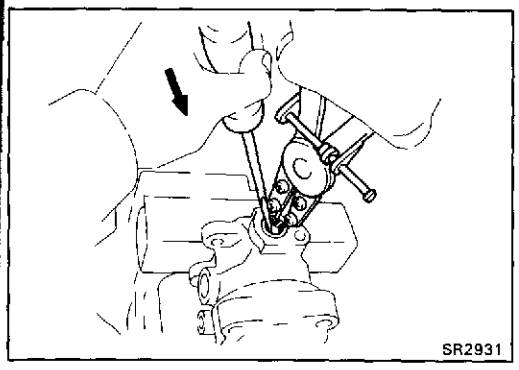
SR2931

(c) Using snap ring pliers, install the snap ring.

2. INSTALL FLOW CONTROL VALVE AND SPRING

(a) Install new O-ring to the housing.

(b) Insert the spring and valve to the housing

HINT: Be sure the letter inscribed on the flow control valve matches the letter stamped on the rear of the pump body.

Inscribed mark: A, B, C, D, E or F

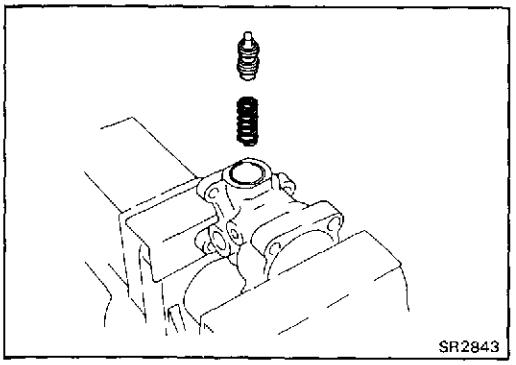
SR2843

3. INSTALL PRESSURE PORT UNION

(a) Install a new O-ring to the pressure port union.

(b) Install and torque the union.

Torque: 700 kg-cm (51 ft-lb, 69 N·m)

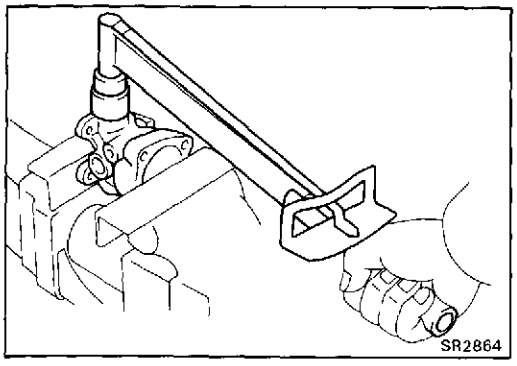
SR2864

4. INSTALL ROTOR SHAFT TO FRONT HOUSING

Install the rotor shaft into the front housing by tapping it in with a plastic hammer.

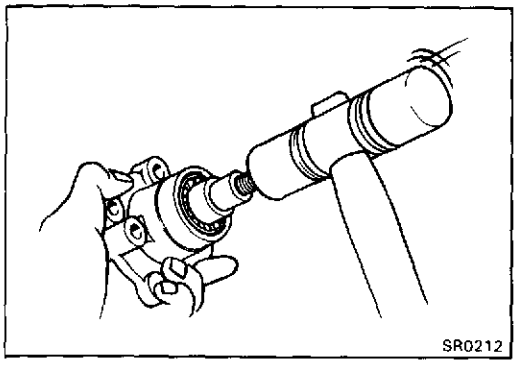
SR0212

5. INSTALL SNAP RING

Using snap ring pliers, install the snap ring to the front housing.

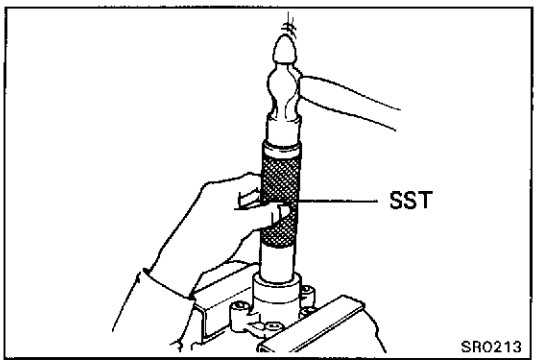

6. INSTALL OIL SEAL

(a) Apply a light coat of MP grease to the oil seal lip

(b) Using SST and hammer, install the oil seal.

SST 09608-30012 (09608-04030)

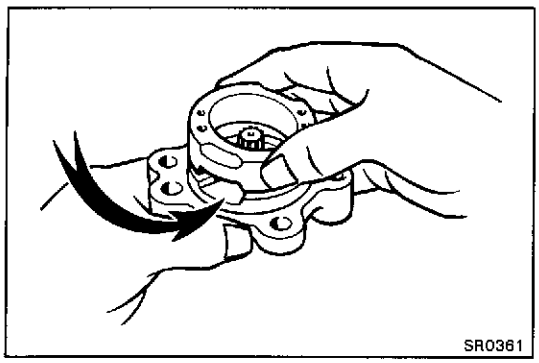

7. INSTALL NEW O-RING

8. INSTALL CAM RING

Align the fluid passages of the cam ring and front housing, and install the cam ring.

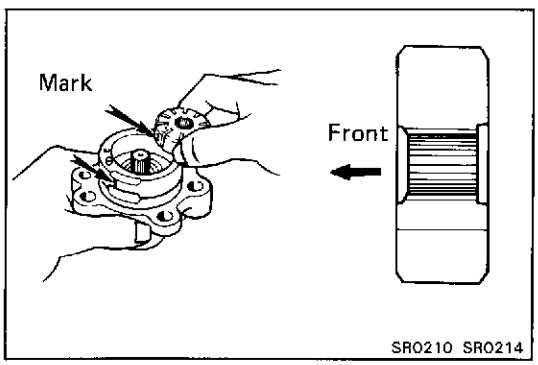

9. INSTALL ROTOR

Install the rotor with the chamfered end facing toward the front

HINT: Be sure the letters inscribed on the cam ring and rotor match

Inscribed mark: 1, 2, 3, 4, or None

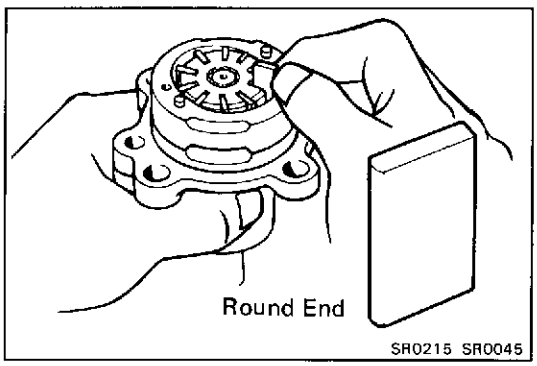

10. INSTALL VANE PLATES

Install the vane plates with the round end facing outward.

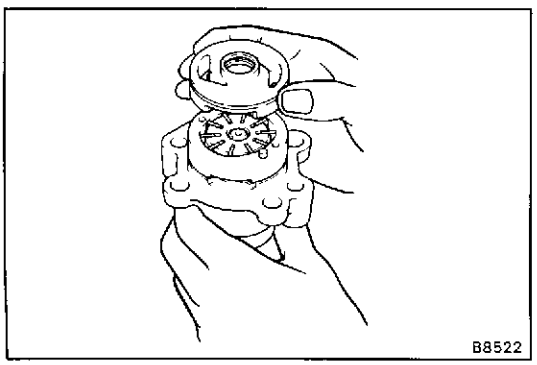

11. INSTALL REAR PLATE AND SPRING

(a) Align the fluid passages of the rear plate and cam ring, and install the rear plate

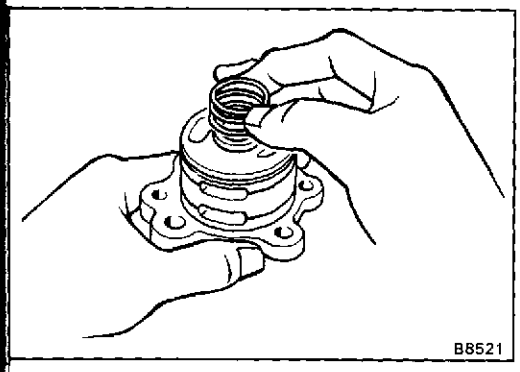

(b) Place the spring on the rear plate.

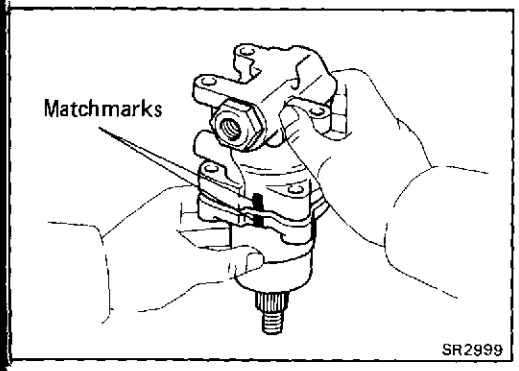

12. INSTALL REAR HOUSING

(a) Align the matchmarks on the front and rear housing and assemble them.

(b) Tighten the front and rear housing mount bolts by hand.

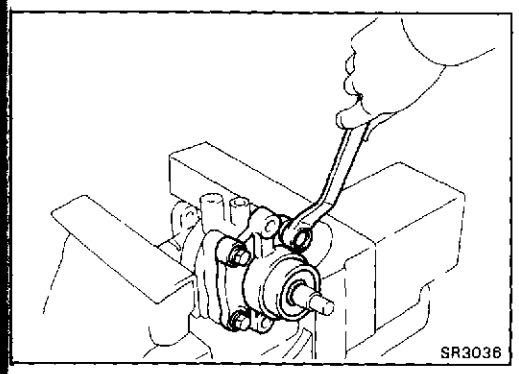

13. TIGHTEN FOUR HOUSING BOLTS

(a) Clamp the rear housing in a vise.

NOTICE: Do not tighten the vise too tight.

(b) Tighten the four housing bolts evenly in 3 or 4 passes.

Torque: 470 kg-cm (34 ft-lb, 46 N·m)

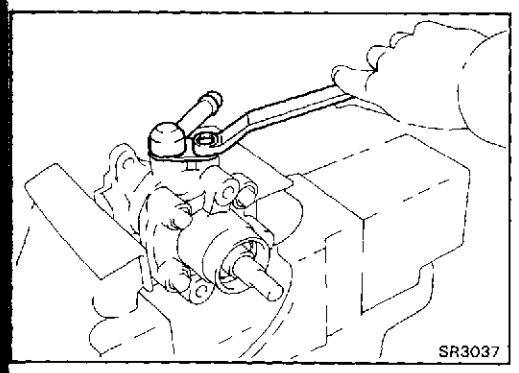

14. INSTALL SUCTION PORT UNION

Insert and tighten the union

Torque: 130 kg-cm (9 ft-lb, 13 N·m)

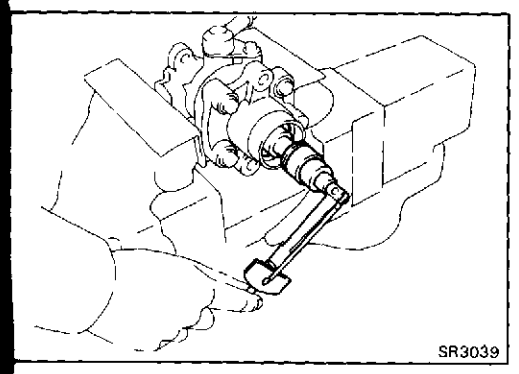

15. CHECK ROTOR SHAFT ROTATION CONDITION

(a) Check that the rotor shaft rotates smoothly without abnormal noise.

(b) Provisionally install the pulley nut and check the rotation torque.

Rotation torque: 2.8 kg-cm (2.4 in.-lb, 0.3 N·m) or less

Gear Housing

REMOVAL AND INSTALLATION OF GEAR HOUSING

Remove and install the parts as shown.

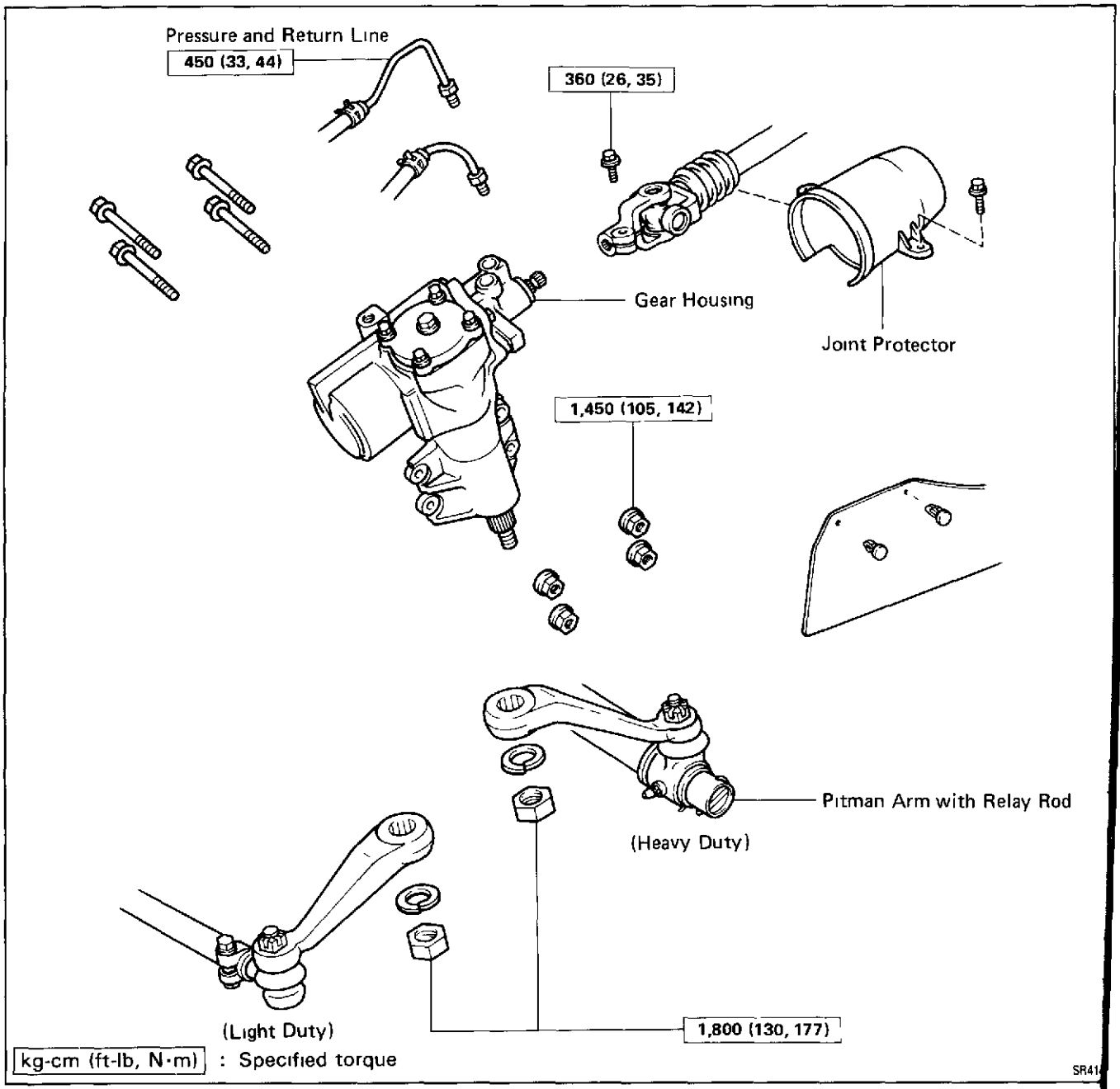

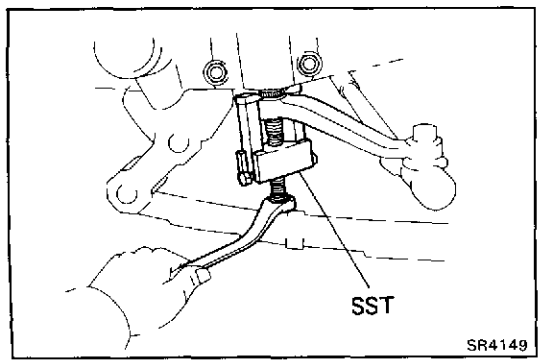

(MAIN POINTS OF REMOVAL AND INSTALLATION)

1. DISCONNECT PITMAN ARM

(a) Loosen the pitman arm nut.

(b) Using SST, disconnect the pitman arm from the s
tor shaft.

SST 09628-62011

(c) Remove the nut, the spring washer and the arm.

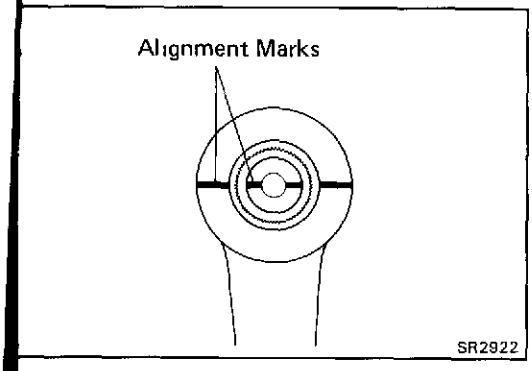

(d) When connecting the pitman arm, align alignment marks on the pitman arm and the sector shaft, and install the spring washer and nut.

Torque: 1,800 kg-cm (130 ft-lb, 177 N·m)

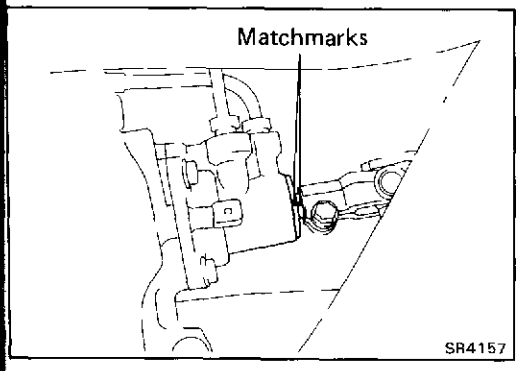

2. DISCONNECT UNIVERSAL JOINT FROM GEAR HOUSING

(a) Place matchmarks on the universal joint and the worm shaft

(b) Loosen the universal joint upper bolt

(c) Remove the universal joint lower bolt.

(d) Slide the joint backward to disconnect the joint from the worm shaft.

COMPONENTS

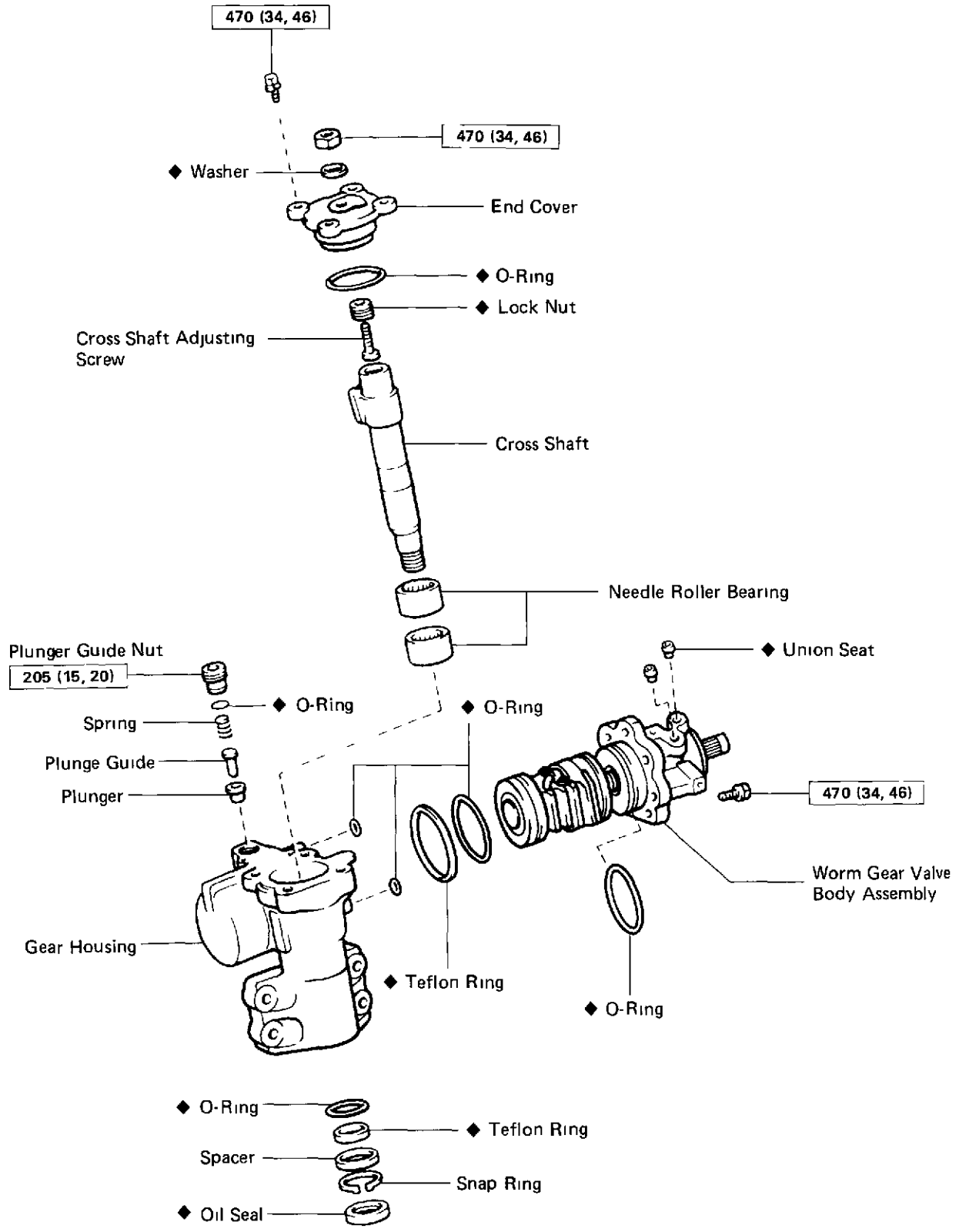

kg-cm (ft-lb, N·m) Specified torque

◆ Non-reusable part

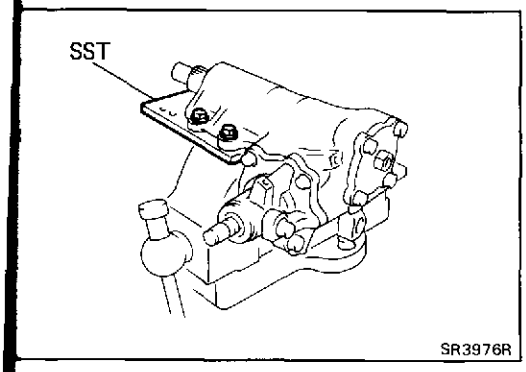

DISASSEMBLY OF GEAR HOUSING

(See page SR-64)

1. MOUNT HOUSING ON STAND

Mount the gear housing on SST and clamp SST in a vise.

SST 09630-00012 (09631-00140)

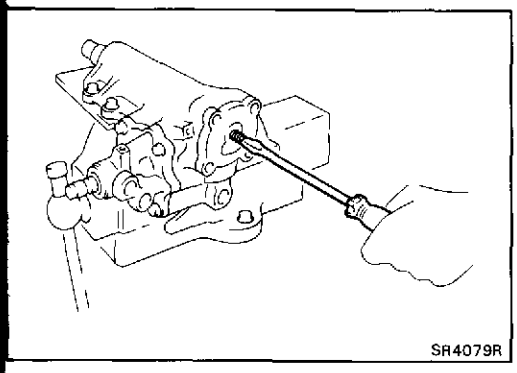

2. REMOVE END COVER

(a) Remove the adjusting screw lock nut.

(b) Remove the four bolts.

(c) Screw in the adjusting screw until the cover comes off.

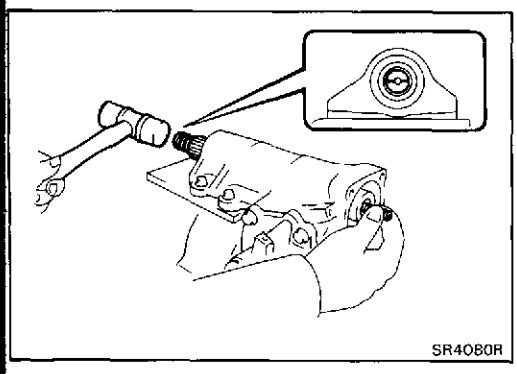

3. REMOVE CROSS SHAFT

Using a plastic hammer, tap on the cross shaft end and pull out the shaft.

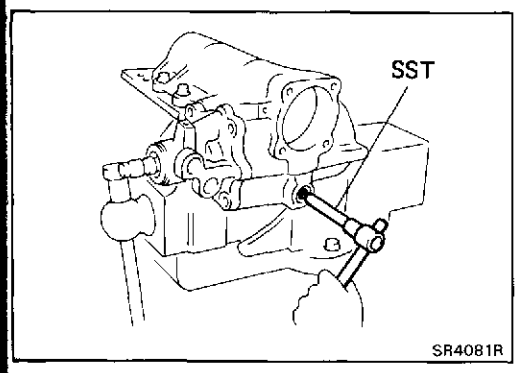

4. REMOVE PLUNGER GUIDE NUT

(a) Using SST, remove the plunger guide nut.

SST 09043-38100

(b) Remove the spring, plunger and plunger guide.

(c) Remove the O-ring.

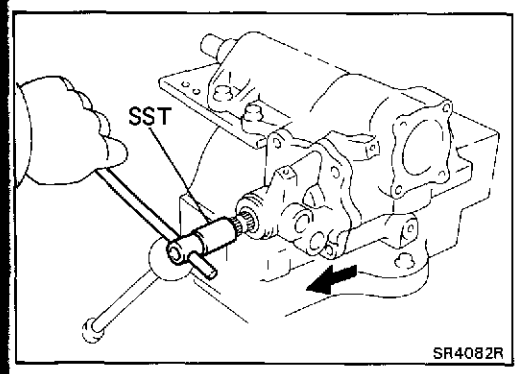

5. REMOVE WORM GEAR VALVE BODY ASSEMBLY

(a) Remove the four cap bolts from the housing.

(b) Using SST, turn the shaft clockwise to disconnect the worm gear valve body assembly from gear housing

SST 09616-00010

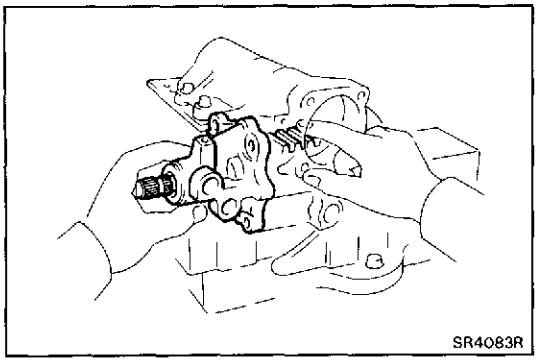
SR4083R

(c) Hold the power piston nut with your thumb so it cannot move, then withdraw the valve body and power piston assembly.

NOTICE: Ensure that the power piston nut does not come off the worm shaft.

(d) Remove the O-ring.

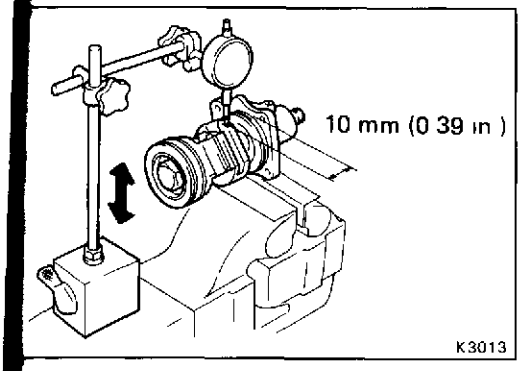

INSPECTION AND REPLACEMENT OF GEAR HOUSING

1. CHECK BALL CLEARANCE

(a) Mount the valve body in a vise.

(b) Using a dial indicator, check the ball clearance Move the worm gear up and down.

Maximum ball clearance: 0.15 mm (0.0059 in.)

If clearance is excessive, the power control valve assembly must be replaced.

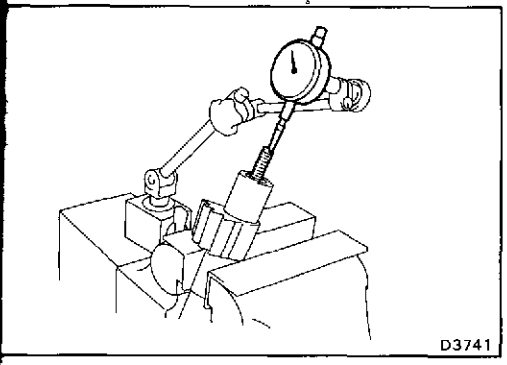

2. INSPECT CROSS SHAFT ADJUSTING SCREW THRUST CLEARANCE

(a) Clamp the cross shaft in a vise.

(b) Using a dial indicator, measure the thrust clearance

Thrust clearance: 0.03 — 0.05 mm (0.0012 — 0.0020 in.)

If thrust clearance is not correct, adjust the thrust clearance.

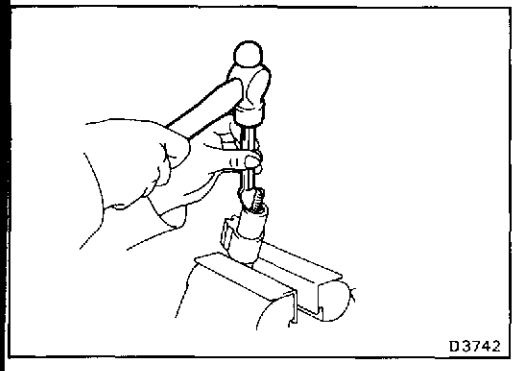

3. IF NECESSARY, ADJUST THRUST CLEARANCE

(a) Using a chisel and hammer, remove the lock nut stake.

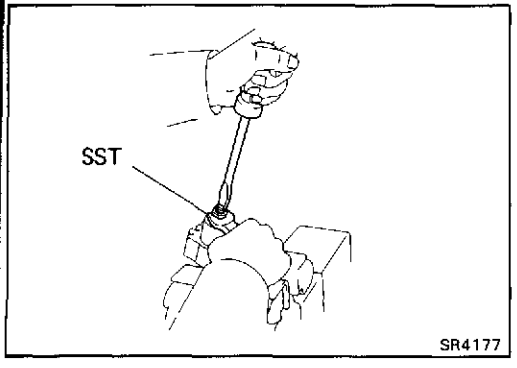

(b) Using SST, remove the lock nut.

SST 09630-00012 (09631-00050)

(c) Adjust the adjusting screw for correct thrust clearance and tighten a new lock nut.

(d) Stake the lock nut.

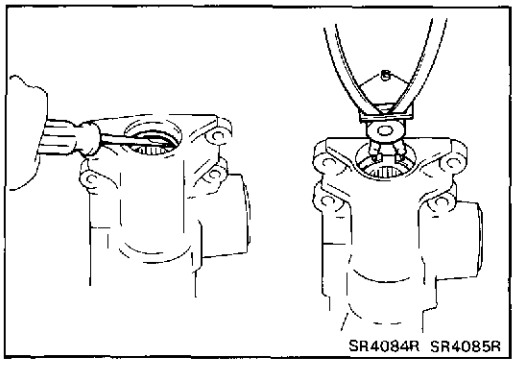

4. IF NECESSARY, REPLACE NEEDLE ROLLER BEARING

(a) Using a screwdriver, pry out the oil seal.

(b) Using snap ring pliers, remove the snap ring.

(c) Remove the metal spacer, teflon ring and O-ring.

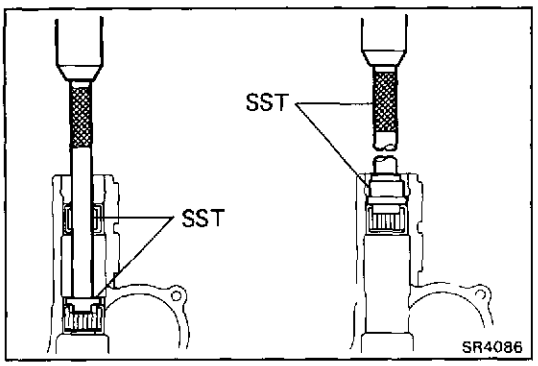

(d) Using SST, press out the upper bearing.

SST 09630-00012 (09631-00020, 09631-00070)

(e) Using SST, press out the lower bearing.

SST 09630-00012 (09631-00020, 09631-00090)

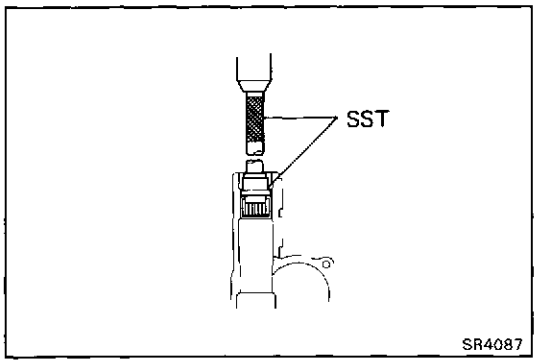

(f) Using SST, press in a new lower bearing.

SST 09630-00012 (09631-00020, 09631-00090)

HINT: Install the lower bearing so that it is positioned 23.1 mm (0.909 in.) away from the housing inner end surface.

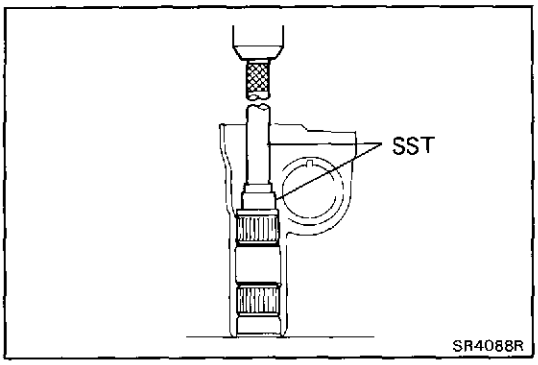

(g) Using SST, press in a new upper bearing

SST 09630-00012 (09631-00020, 09631-00090)

HINT: The bearing's top end should be installed so that it aligns with the housing end surface.

(h) Install a new O-ring and metal spacer.

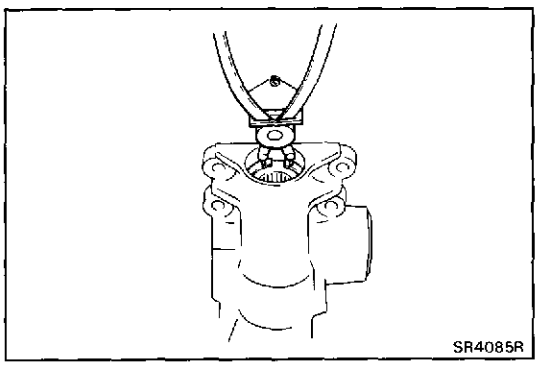

(i) Using snap ring pliers, install the snap ring.

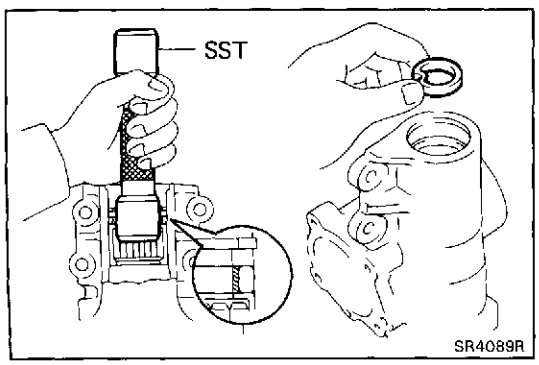

(j) Form a new teflon ring into a heart shapeand in it with hand

(k) Using SST, form the teflon ring.

NOTICE: The teflon ring must be squeezed befor serting the sector shaft or damage will result.

SST 09630-00012 (09631-00120)

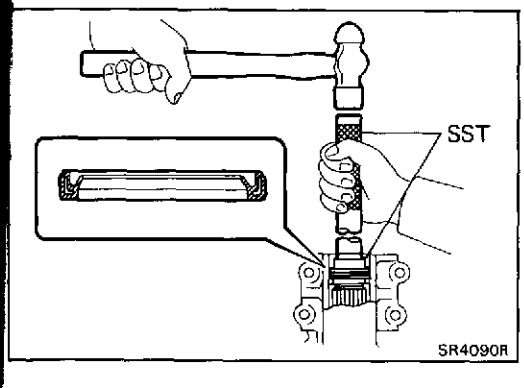

(l) Using SST, drive a new oil seal into the gear housing.

SST 09630-00012 (09631-00020, 09631-00090)

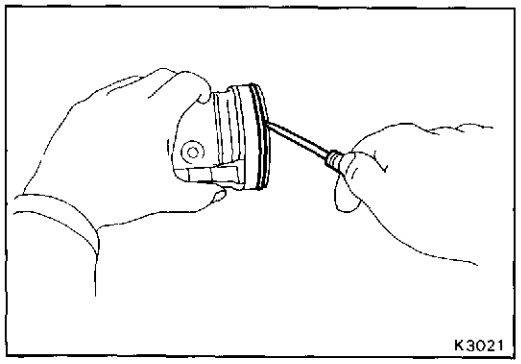

5. IF NECESSARY, REPLACE CONTROL VALVE TEFLON RING

(a) Using a screwdriver, remove the teflon ring and O-ring.

NOTICE: Be careful not to damage the control valve.

(b) Install a new O-ring.

(c) Expand a new teflon ring with your fingers.

NOTICE: Be careful not to over-expand the teflon ring

(d) Install a new teflon ring.

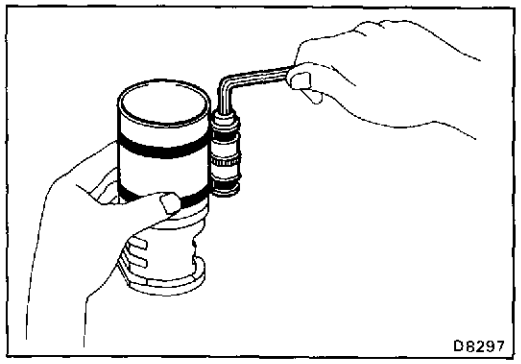

(e) Coat the teflon ring with power steering fluid and snug it down with piston ring compressor for 5 — 7 minutes.

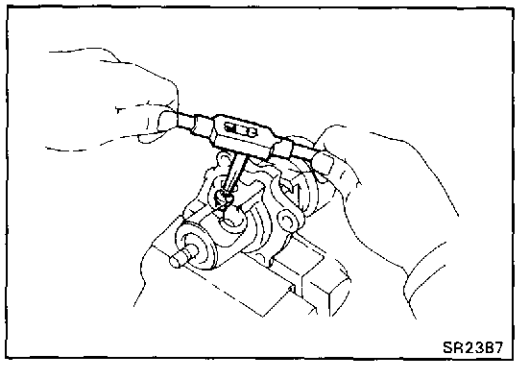

6. IF NECESSARY, REPLACE UNION SEAT

(a) Using a screw extractor, remove the union seat.

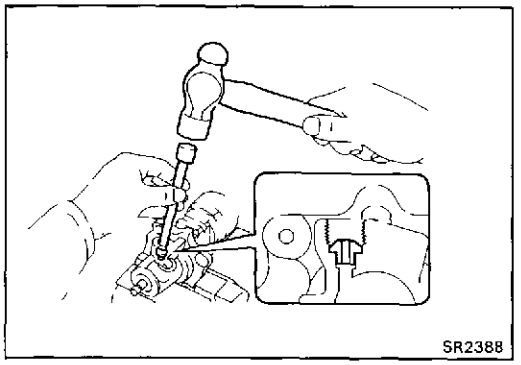

(b) Using a plastic hammer and extension bar, tap in a new union seat.

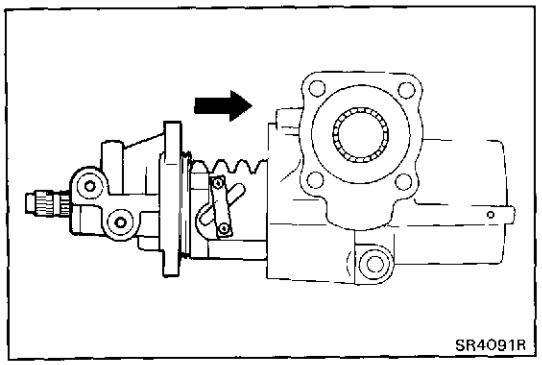
SR4091R

ASSEMBLY OF GEAR HOUSING

(See page SR-64)

1. INSTALL WORM GEAR VALVE BODY ASSEMBLY

(a) Install the three O-rings to the gear housing and valve body

(b) Mount the gear housing on SST and clamp SST in vise

SST 09630-00012 (09631-00140)

(c) Insert the worm gear valve body assembly to the gear housing as shown.

(d) Install and torque the four bolts.

Torque: 470 kg-cm (34 ft-lb, 46 N·m)

NOTICE: Be careful not to damage the teflon ring.

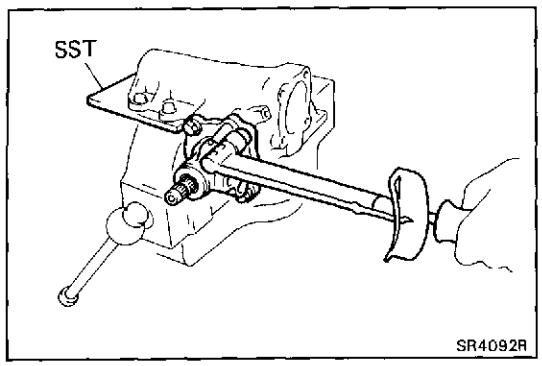

SR4092R

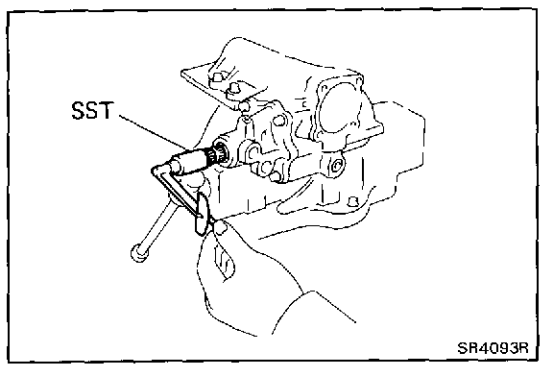

SR4093R

(e) Using SST, check the worm gear preload.

SST 09616-00010

Preload: (at starting)
3 — 5.5 kg-cm (2.6 — 4.8 in.-lb, 0.3 — 0.5 N·m)

HINT: Hold the power piston nut to prevent it from turning.

If preload is not correct, replace the worm gear assembly.

2. INSTALL PLUNGER GUIDE NUT

(a) Install the plunger, plunger guide and spring

(b) Install a new O-ring to the plunger guide nut and install the plunger guide nut with SST.

SST 09043-38100

Torque: 205 kg-cm (15 ft-lb, 20 N·m)

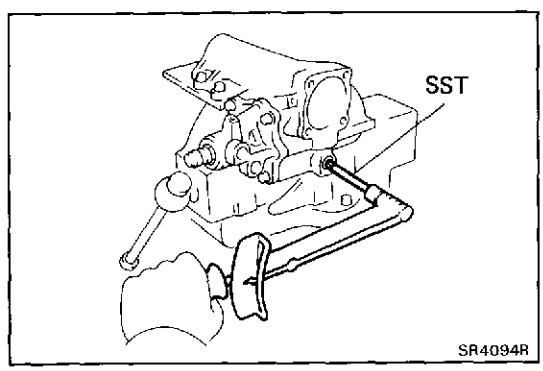

SR4094R

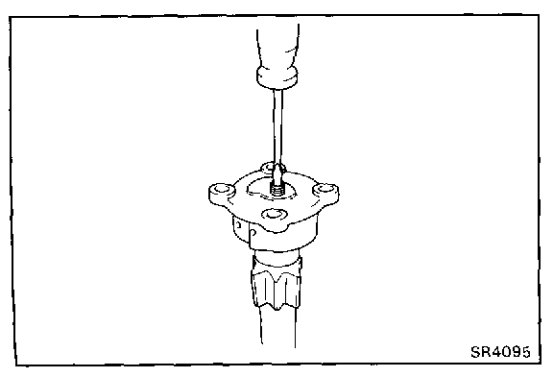
SR4095

3. INSTALL CROSS SHAFT AND END COVER

(a) Install a new O-ring on the end cover.

(b) Using a screwdriver, assemble the cross shaft to end cover.

HINT: Fully loosen the adjusting screw.

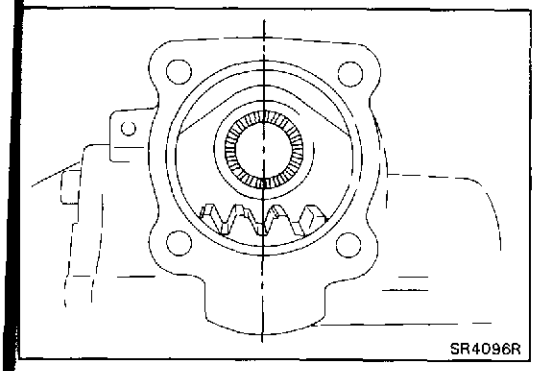
SR4096R

(c) Set the worm gear at the center of the gear housing.

(d) Insert and push the cross shaft into the gear housing so that the center teeth mesh together.

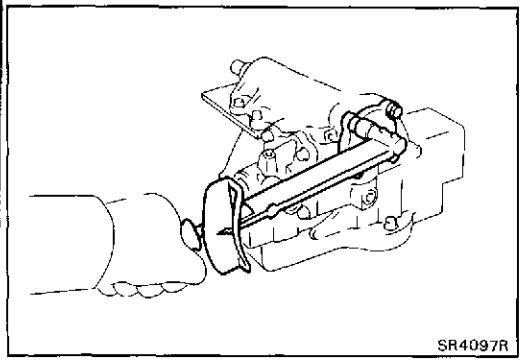
SR4097R

(e) Install the four cap bolts. Torque the bolts in a diagonal pattern

Torque: 470 kg-cm (34 ft-lb, 46 N·m)

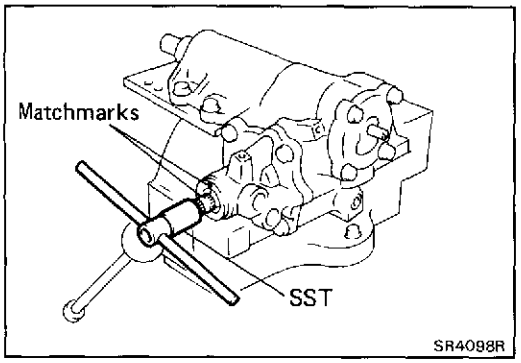

SR4098R

4. DETERMINE CENTER POSITION OF GEAR HOUSING

(a) Using SST, turn the worm shaft so full lock in both directions and determine the exact center.

SST 09616-00010

(b) Place matchmarks on the worm shaft and housing to show neutral position.

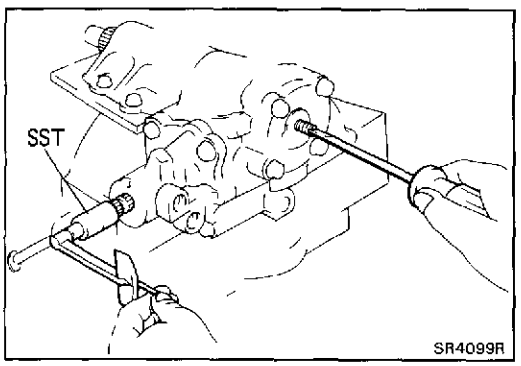

SR4099R

5. ADJUST CROSS SHAFT ADJUSTING SCREW

(a) Install SST with a torque meter on the worm shaft.

SST 09616-00010

(b) Turn the adjusting screw while measuring the preloaduntilit is correct.

Total preload: (at starting)

7.5 — 11 kg-cm (6.5 — 9.6 in.-lb, 0.74 — 9.6 N·m)

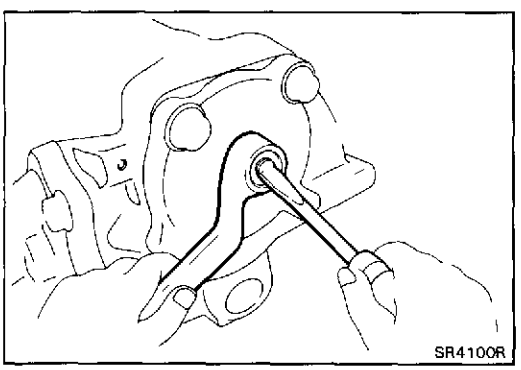
SR4100R

6. INSTALL NEW WASHER

7. INSTALL AND TIGHTEN LOCK NUT

Torque the lock nut while holding the adjusting screw.

Torque: 470 kg-cm (34 ft-lb, 46 N·m)

8. CHECK TOTAL PRELOAD

STEERING LINKAGE (LIGHT DUTY)

REMOVAL AND INSTALLATION OF STEERING LINKAGE

Remove and install the parts as shown.

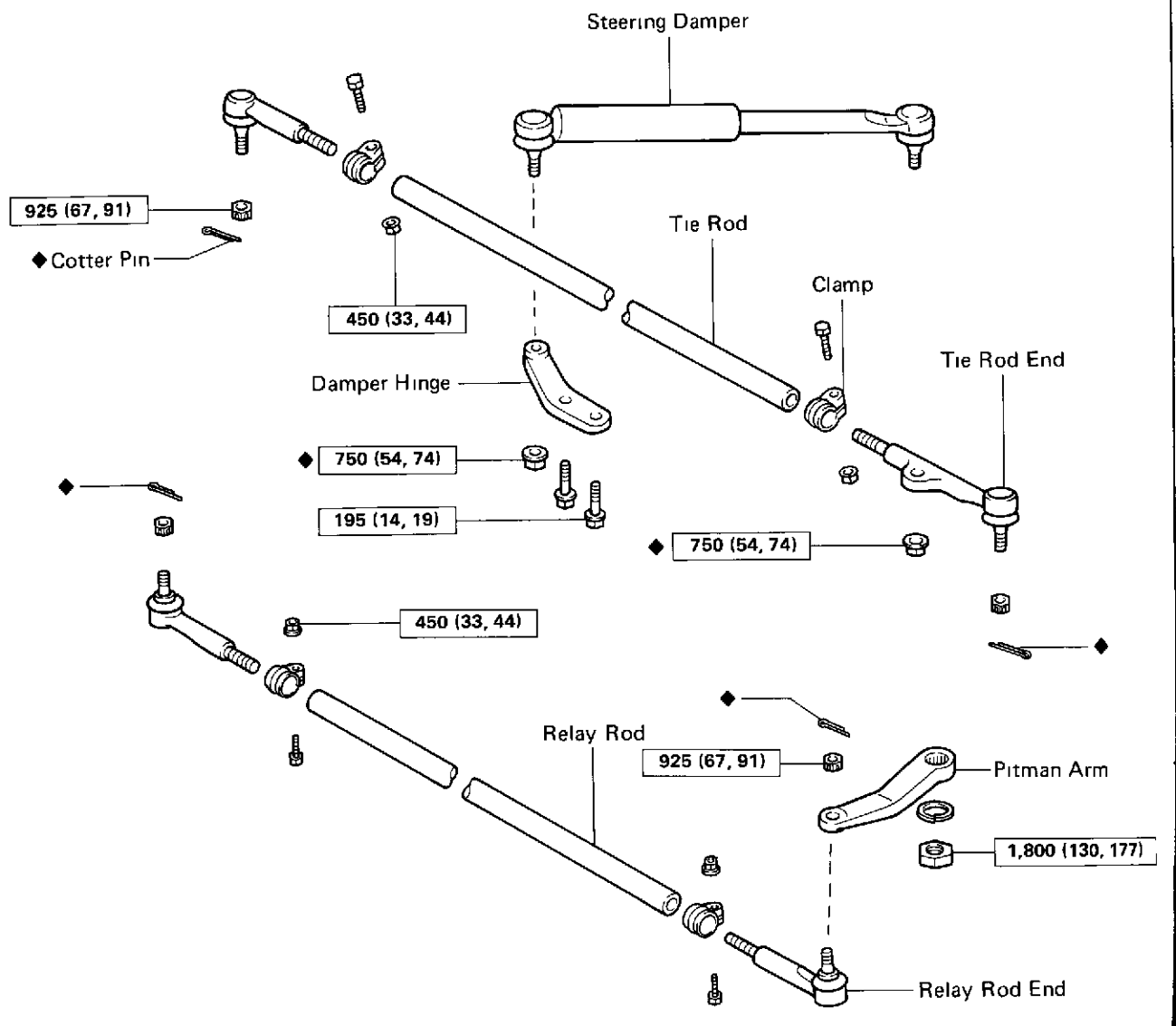

kg-cm (ft-lb, N·m) : Specified torque

◆ Non-reusable part

SR415

HINT.

- When connecting the ball stud to the arm or rod, r move the grease on the joint surfaces
- After torquing the ball stud nut to specified torque, a vance the nut just enough to insert the cotter pin.
- After installing any of the steering linkage comp nents, check the front wheel alignment and side sl (See page SA-3)

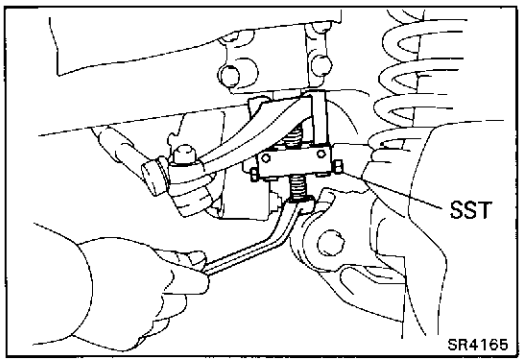

(MAIN POINTS OF REMOVAL AND INSTALLATION)

1. DISCONNECT AND CONNECT PITMAN ARM FROM/TO SECTOR SHAFT

(a) Loosen the pitman arm nut.

(b) Using SST, disconnect pitman arm from sector shaft.

SST 09628-62011

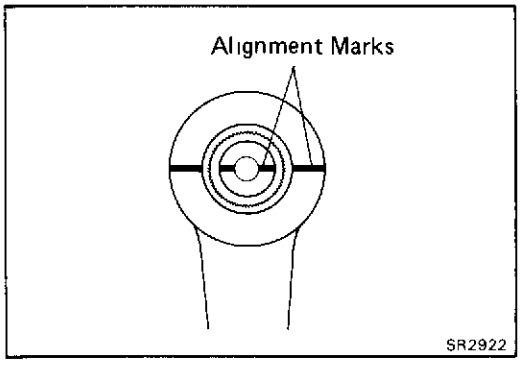

(c) When connecting, align alignment marks on the pitman arm and the sector shaft, and install the spring washer and nut.

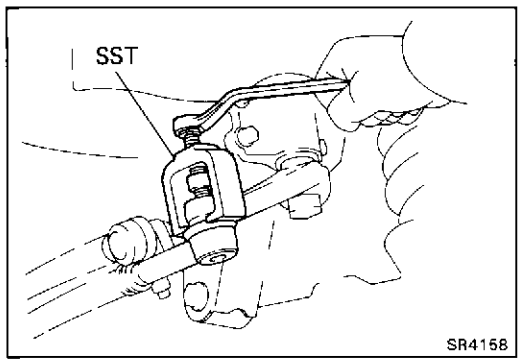

2. DISCONNECT PITMAN ARM FROM RELAY ROD

(a) Remove the cotter pin and nut.

HINT: Before removing the arm, temporarily install the pitman arm nut.

(b) Using SST, disconnect the pitman arm from relay rod.

SST 09611-22012

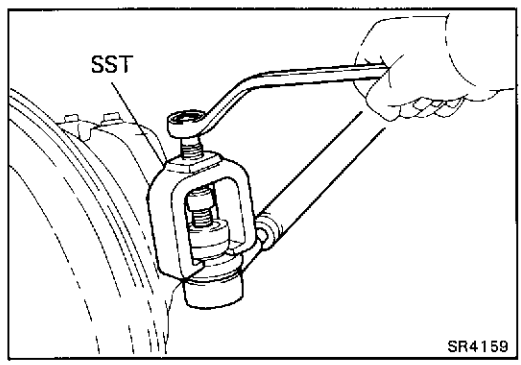

3. DISCONNECT RELAY ROD FROM KNUCKLE ARM

(a) Remove the cotter pin and nut

(b) Using SST, disconnect the relay rod from knuckle arm

SST 09611-12010

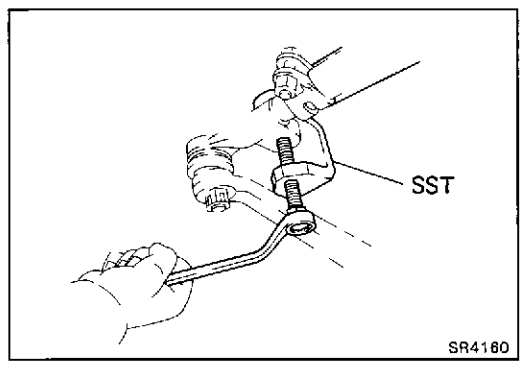

4. DISCONNECT STEERING DAMPER FROM TIE ROD

(a) Remove the nut

(b) Using SST, disconnect steering damper from tie rod.

SST 09611-12010

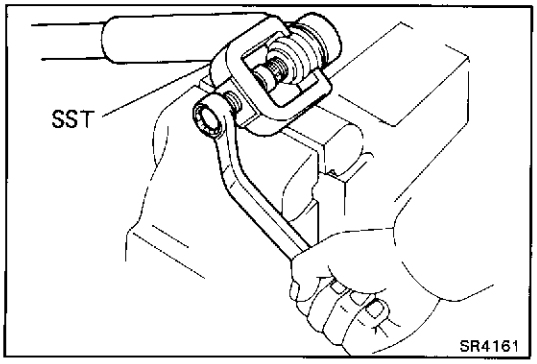

5. DISCONNECT STEERING DAMPER FROM HINGE

(a) Clamp the hinge in a vise.

(b) Using SST, disconnect the damper from hinge.

SST 09611-22012

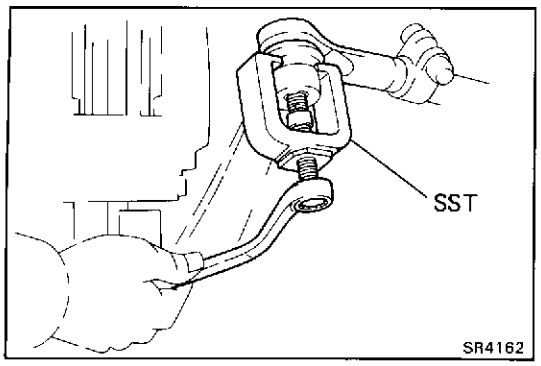

6. DISCONNECT TIE ROD FROM KNUCKLE ARM

(a) Remove the cotter pin and nut

(b) Using SST, disconnect the tie rod from knuckle arm

SST 09611-22012

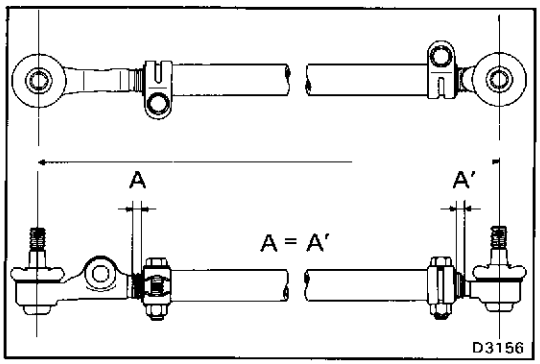

7. IF NECESSARY, ADJUST TIE ROD LENGTH

(a) Loosen the tie rod end clamp.

(b) Turn the tie rod ends equal amounts into the tie rod tube. Tie rods should be approximately 1,207 mm (47.51 in.).

(c) Temporarily tighten the tie rod end clamp

8. IF NECESSARY, ADJUST RELAY ROD LENGTH

(a) Loosen the relay rod end clamp.

(b) Turn the relay rod ends equal amounts into the relay rod tube. Relay rods should be approximately 1,20 mm (47.51 in.).

(c) Temporarily tighten the relay rod end clamp

BRAKE SYSTEM

	Page
PRECAUTIONS	BR-2
TROUBLESHOOTING	BR-2
CHECKS AND ADJUSTMENTS	BR-6
MASTER CYLINDER	BR-10
BRAKE BOOSTER	BR-17
VACUUM PUMP	BR-49
FRONT BRAKE	BR-62
Drum Brake	BR-62
Disc Brake	BR-69
REAR BRAKE	BR-76
Drum Brake	BR-76
Disc Brake	BR-86
Parking Brake	BR-93
LOAD SENSING PROPORTIONING VALVE (LSPV)	BR-102

PRECAUTIONS

1. **Care must be taken to replace each part properly as it could affect the performance of the brake system and result in a driving hazard. Replace the parts with parts of the same part number or equivalent.**

2. **It is very important to keep parts and the area clean when repairing the brake system.**

TROUBLESHOOTING

Problem	Possible cause	Remedy	Page
Low or spongy pedal	Linings worn	Replace brake shoes	BR-62, 76
	Leak in brake system	Repair leak	93
	Master cylinder faulty	Repair or replace master cylinder	BR-10
	Air in brake system	Bleed brake system	BR-7
	Wheel cylinder faulty	Repair wheel cylinder	BR-62, 76
	Piston seals worn or damaged	Repair brake cylinder	BR-69, 86
	Rear brake automatic adjuster faulty	Repair or replace adjuster	BR-62, 76 93
Brakes drag	Parking brake out of adjustment	Adjust parking brake	BR-9
	Binding parking brake wire	Repair as necessary	
	Booster push rod out of adjustment	Adjust push rod	BR-47
	Tension or return spring faulty	Replace spring	BR-62, 76 93
	Brake line restricted	Repair as necessary	
	Lining cracked or distorted	Replace shoe	BR-69, 86
	Wheel cylinder or caliper piston sticking	Repair as necessary	BR-69, 86
	Adjuster broken	Replace adjuster	BR-62, 76 93
	Master cylinder faulty	Repair or replace master cylinder	BR-11
Brakes pull	Tires improperly inflated	Inflate tires to proper pressure	
	Oil or grease on shoes or pads	Check for cause. Replace shoes or pads	BR-69, 8
	Brake shoes distorted, linings worn or glazed	Replace brake shoes	BR-69, 8
	Brake pads distorted, worn or glazed	Replace pads	BR-69, 8
	Drum or disc out of round	Replace drum or disc	BR-62, 7
	Tension or return spring faulty	Replace spring	BR-69, 8
	Wheel cylinder faulty	Repair wheel cylinder	BR-69, 8
	Piston frozen in brake cylinder	Repair cylinder	BR-62, 7
	Brake pad sticking	Replace pads	BR-62, 7

TROUBLESHOOTING (Cont'd)

Problem	Possible cause	Remedy	Page
rd pedal but akes efficient	Oil or grease on linings	Check for cause. Replace shoes or pads	BR-62, 76 93
	Brake shoes distorted, linings worn or glazed, drums worn	Replace brake shoes	BR-69, 86
	Brake pads distorted, worn or glazed	Replace pads	BR-69, 86
	Piston frozen in brake cylinder	Repair cylinder	BR-69, 86
	Brake booster faulty	Repair booster	BR-17
	Vacuum leaks	Repair as necessary	
	Vacuum pump faulty	Repair or replace vacuum pump	BR-49
	Brake line restricted	Repair as necessary	
Snapping or clicking noise when brakes are applied	(Drum brake)		
	Brake shoes binding at backing plate ledges	Lubricate	BR-62, 76 93
	Backing plate ledges worn	Replace and lubricate ledges	BR-62, 76 93
	Loose or missing shoe hold-down spring	Replace shoe hold-down spring	BR-62, 76 93
	Loose set bolt at backing plate	Tighten	BR-62, 76 93
	(Disk brake)		
	Loose or missing pad support plate	Replace pad support plate	BR-69, 86
	Loose installation bolt	Tighten	BR-69, 86
	Wear on slide bushing	Replace slide bushing	BR-69, 86
Scraping or grinding noise when brakes are applied	Worn brake linings or pads	Replace or refinish drums or rotors if heavily scored	BR-62, 76
	Caliper to wheel or rotor interference	Replace as required	BR-69, 86
	Dust cover to rotor or backing plate to drum interference	Correct or replace	BR-62, 76
	Other brake system components faulty	Repair or replace as necessary	
	Tires rubbing against chassis and/or body	Repair as necessary	

TROUBLESHOOTING (Cont'd)

Problem	Possible cause	Remedy	Page
Squeaking, squealing groaning or chattering noise when brakes are applied HINT Brake friction materials inherently generate noise and heat in order to dissipate energy. As a result, occasional squeal is normal and is aggravated by severe environmental conditions such as cold, heat, wetness, snow, salt, mud, etc. This occasional squeal is not a functional problem and does not indicate any loss of brake effectiveness	Brake drums and linings, rotors and pads worn or scored	Inspect, repair or replace	BR-62, 76
	Dirty, greased, contaminated or glazed linings or pads	Clean or replace	
	Improper linings or pads using	Inspect for correct usage or replace	
	Maladjustment of brake pedal or booster push rod	Inspect and adjust	BR-6, 47
	(Disc brake)		
	Missing or damaged brake pad anti-squeal shim	Replace	BR-69, 86
	Pad wear and pad wear indicator making contact with the rotor	Replace	BR-69, 86
	Burred or rusted calipers	Clean or deburr	BR-69, 86
	(Drum brake)		
	Weak damaged or incorrect shoe hold-down springs, loose or damaged shoe hold-down spring pins and springs and grooved backing plate ledges	Inspect, repair or replace	BR-62, 76 93
Squealing and squeaking noise when brakes are not applied	Maladjustment of brake pedal or booster push rod	Inspect and adjust	BR-6, 47
	Poor return of brake booster or master cylinder or wheel cylinder	Inspect, repair or replace	BR-10, 17
	(Disc brake)		
	Rusted or stuck piston	Inspect and lubricate as necessary	BR-69, 86
	Improper positioning of pad in caliper	Reinstall correctly	BR-69, 86
	Rotor rubbing against caliper housing	Inspect and replace	BR-69, 86
	Improper installation of disc brake pad support plate	Reinstall correctly	BR-69, 86
	Pad wear and pad wear indicator making contact with the rotor	Replace	BR-69, 86
	(Drum brake)		
	Weak, damaged or incorrect shoe hold-down springs	Replace	BR-62, 76 93
	Grooved backing plate ledges	Replace	BR-62, 76 93
	Bent or warped backing plate causing interference with drum	Repair or replace	
	Improper machining of drum causing interference with backing plate or shoe	Replace drum	BR-62, 76 93
	Other brake system components: Loose or extra parts in brakes Rear drum adjustment too tight causing lining to glaze Worn, damaged or insufficiently lubricated wheel bearings	Inspect, repair or replace as necessary	BR-62, 76 93

TROUBLESHOOTING (Cont'd)

Problem	Possible cause	Remedy	Page
Groaning, clicking or rattling noise when brakes are not applied	Stones or foreign material trapped inside wheel covers	Remove foreign material	
	Loose wheel nuts	Tighten to correct torque	
		Replace if stud holes are elongated	
	Maladjustment of brake pedal or booster push rod	Inspect and adjust	BR-6, 47
	Worn, damaged or dry wheel bearings	Inspect and lubricate or replace	
	(Disc brake)		
	Loose or missing anti-rattle spring or pad support plate or crimping on outer pad	Inspect, repair or replace	BR-69, 86
	Failure of shim	Inspect, replace if necessary	BR-69, 86
	Wear on slide bushing	Inspect, replace if necessary	BR-69, 86
	Loose installation bolt	Inspect, tighten if necessary	BR-69, 86
	Poor return of piston	Inspect, repair or replace	BR-69, 86
	(Drum brake)		
	Loose or extra parts	Inspect and repair	BR-62, 76 93

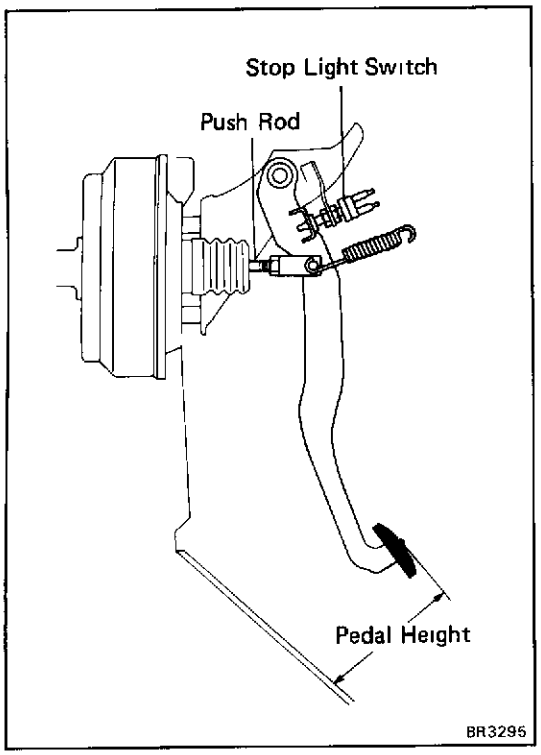

CHECKS AND ADJUSTMENTS

CHECK AND ADJUSTMENT OF BRAKE PEDAL

1. CHECK THAT PEDAL HEIGHT IS CORRECT

Pedal height from asphalt sheet: 161—171 mm (6.34—6.73 in.)

If incorrect, adjust the pedal height.

2. IF NECESSARY, ADJUST PEDAL HEIGHT

(a) Sufficiently loosen the stop light switch.

(b) Loosen the clevis lock nut.

(c) Adjust the pedal height by turning the pedal push rod.

(d) Return the stop light switch until its body lightly contacts the pedal stopper.

(e) After adjusting the pedal height, check and adjust the pedal freeplay.

(f) Tighten the clevis lock nut.

Torque: 375 kg-cm (27 ft-lb, 37 N·m)

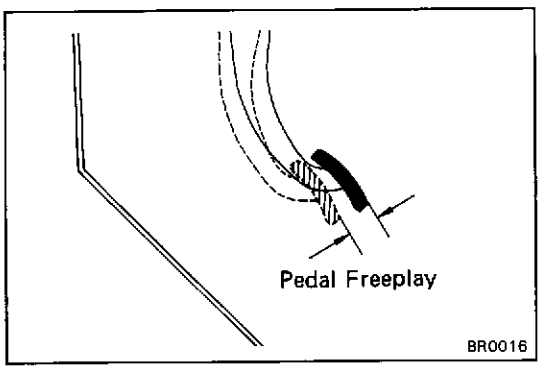

3. CHECK PEDAL FREEPLAY

(a) Stop the engine and depress the brake pedal several times until there is no more vacuum left in the booster.

(b) Push in the pedal until the beginning of resistance is felt. Measure the distance, as shown.

Pedal freeplay: 3 — 6 mm (0.12 — 0.24 in.)

4. IF NECESSARY, ADJUST PEDAL FREEPLAY

(a) If incorrect, adjust the pedal freeplay by turning the pedal push rod.

(b) Start the engine and confirm that pedal freeplay exists.

(c) After adjusting the pedal freeplay, check the pedal height.

5. CHECK THAT PEDAL RESERVE DISTANCE IS CORRECT

Release the parking brake lever.

With engine running, depress the pedal and measure the pedal reserve distance, as shown.

Pedal reserve distance from asphalt sheet at 50 kg (110 lb, 490 N):

Front disc type	**More than 68 mm (2.68 in.)**
Front drum type	
• Heavy-Duty	
70, 73 series	**More than 100 mm (3.94 in.)**
75 series	**More than 90 mm (3.54 in.)**
• Light-Duty	**More than 105 mm (4.13 in.)**

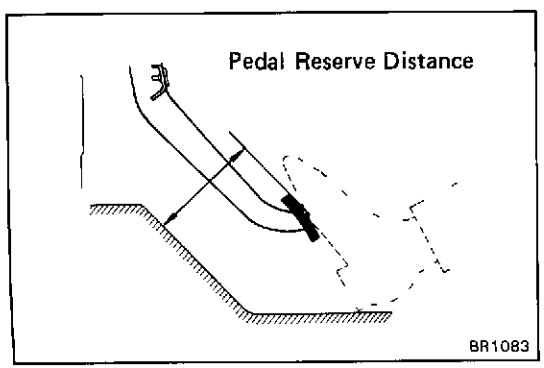

If incorrect, troubleshoot the brake system.

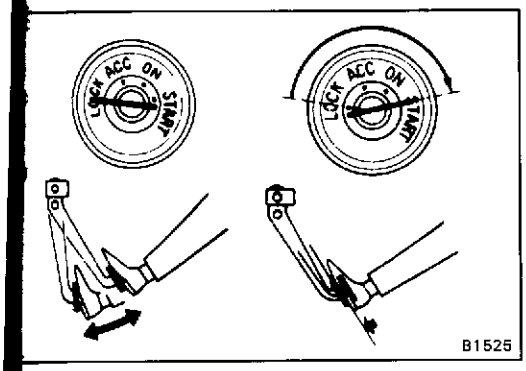

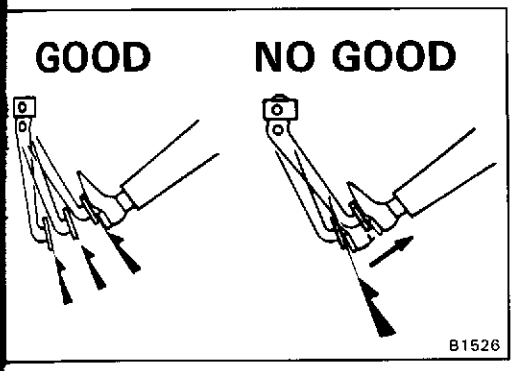

OPERATIONAL TEST OF BRAKE BOOSTER

HINT: If the booster leaks or lacks of vacuum, repair before testing.

1. OPERATING CHECK

(a) Depress the brake pedal several times with the engine off, and check that there is no change in the pedal reserve distance.

(b) Depress the brake pedal and start the engine. If the pedal goes down slightly, operation is normal.

2. AIR TIGHTNESS CHECK

(a) Start the engine and stop it after one or two minutes. Depress the brake pedal several times slowly. If the pedal goes down the farthest the first time, but gradually rises after the second or third time, the booster is air tight.

(b) Depress the brake pedal while the engine is running, and stop it with the pedal depressed. If there is no change in pedal reserve travel after holding the pedal for thirty seconds, the booster is air tight.

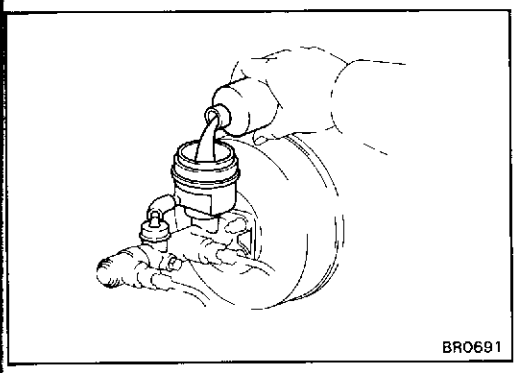

BLEEDING OF BRAKE SYSTEM

HINT: If any work is done on the brake system or if air is suspected in the brake lines, bleed the system of air.

NOTICE: Do not let brake fluid remain on a painted surface. Wash it off immediately.

1. FILL BRAKE RESERVOIR WITH BRAKE FLUID

Check the reservoir after bleeding each wheel. Add fluid, if necessary.

Brake fluid: SAE J1703 or FMVSS No.116 DOT3

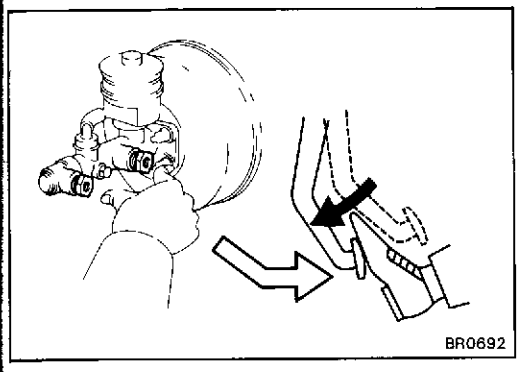

2. BLEED MASTER CYLINDER

HINT: If the master cylinder was disassembled or if the reservoir becomes empty, bleed the air from the master cylinder.

(a) Disconnect the brake tubes from the master cylinder. Use a container to catch the brake fluid

(b) Slowly depress the brake pedal and hold it.

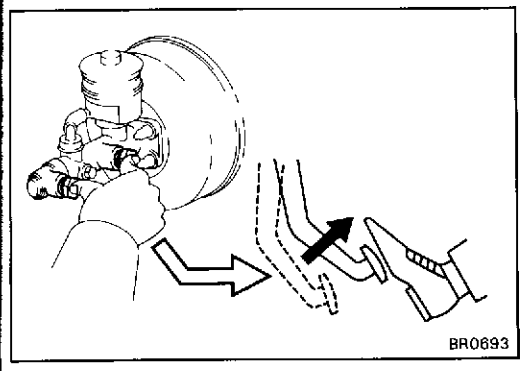

(c) Block off the outlet holes with your fingers, and release the brake pedal.

(d) Repeat (b) and (c) three or four times.

(e) Connect the brake tubes to the master cylinder

3. **CONNECT VINYL TUBE TO WHEEL CYLINDER BLEEDER PLUG**

Insert other end of the tube in a half-full container of brake fluid

HINT: Begin air bleeding from the wheel cylinder with the longest hydraulic line.

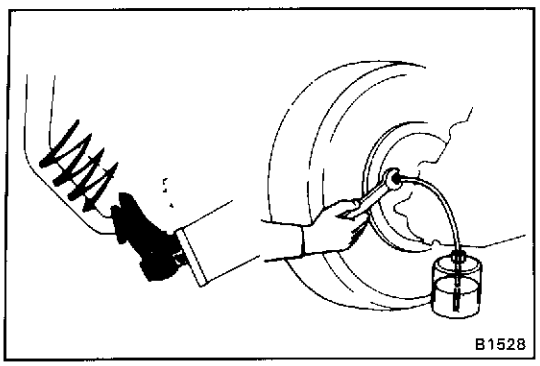

4. **BLEED AIR FROM BRAKE LINE**

(a) Slowly pump the brake pedal several times.

(b) While an assistant press on the pedal, loosen the bleeder plug until fluid starts to run out. Then close the bleeder plug.

(c) Repeat this procedure until there are no more air bubbles in the fluid.

Bleeder plug tightening torque:
110 kg-cm (8 ft-lb, 11 N·m)

5. **REPEAT PROCEDURE FOR EACH WHEEL**

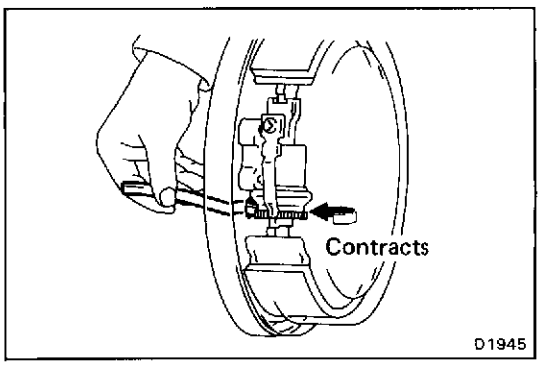

ADJUSTMENT OF BRAKE SHOE CLEARANCE (Front Drum Brake Type)

ADJUST BRAKE SHOE CLEARANCE

(a) Jack up and support the vehicle.

(b) Remove the shoe adjusting hole plugs from the backing plate

(c) Using a screwdriver, turn the adjusting nut until the wheel locks

(d) Using a screwdriver, turn the adjusting nut until the wheel turns freely.

Standard number of notches to be backed off:
7 — 8 notches

(e) Repeat the steps (c) and (d) for the other wheel cylinder.

(f) Install the shoe adjusting hole plugs.

(g) Repeat the steps from (b) to (f) for another wheel

(h) Check that the pedal reserve distance is correct. (See page BR-6)

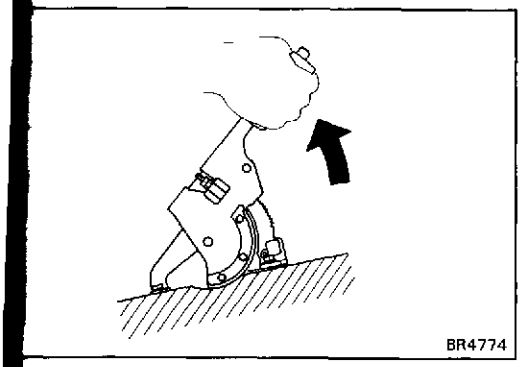
BR4774

CHECK AND ADJUSTMENT OF PARKING BRAKE

1. CHECK THAT PARKING BRAKE LEVER TRAVEL IS CORRECT

Pull the parking brake lever all the way up, and count the number of clicks.

Parking brake lever travel at 20 kg (44.1 lb, 196 N):
7 — 9 clicks

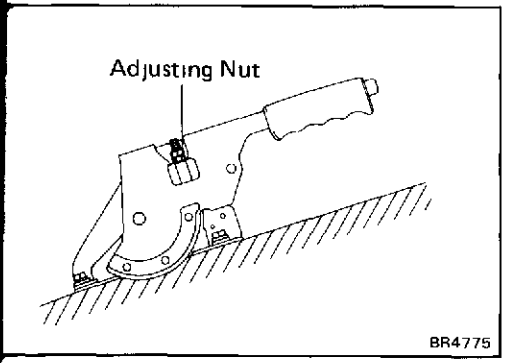

BR4775

2. IF NECESSARY, ADJUST PARKING BRAKE

HINT: Before adjusting the parking brake lever travel, make sure that the rear brake shoe clearance has been adjusted.

(a) For shoe clearance adjustment, see step 9 on page BR-84 or see step 11 on page BR-101.

(b) Loosen the two adjusting nuts and adjust the parking brake cable until travel is correct.

MASTER CYLINDER

COMPONENTS

Ex. 2L-T Engine (RHD)

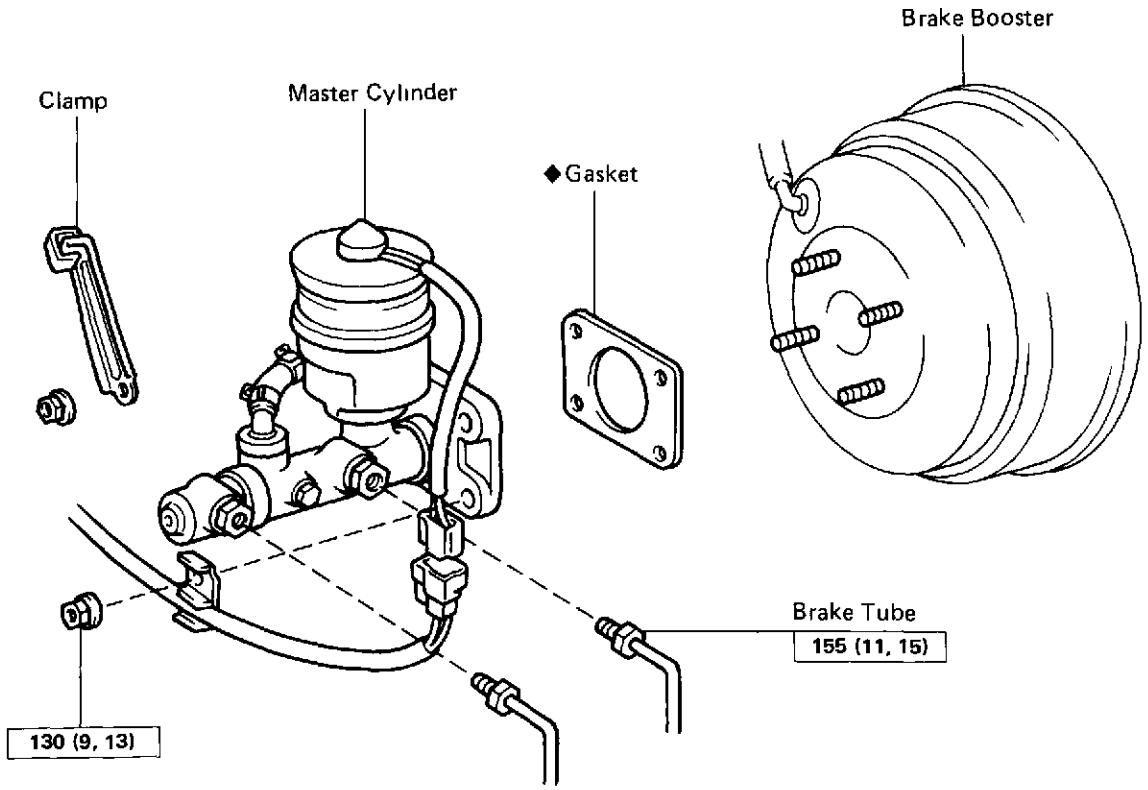

2L-T Engine (RHD)

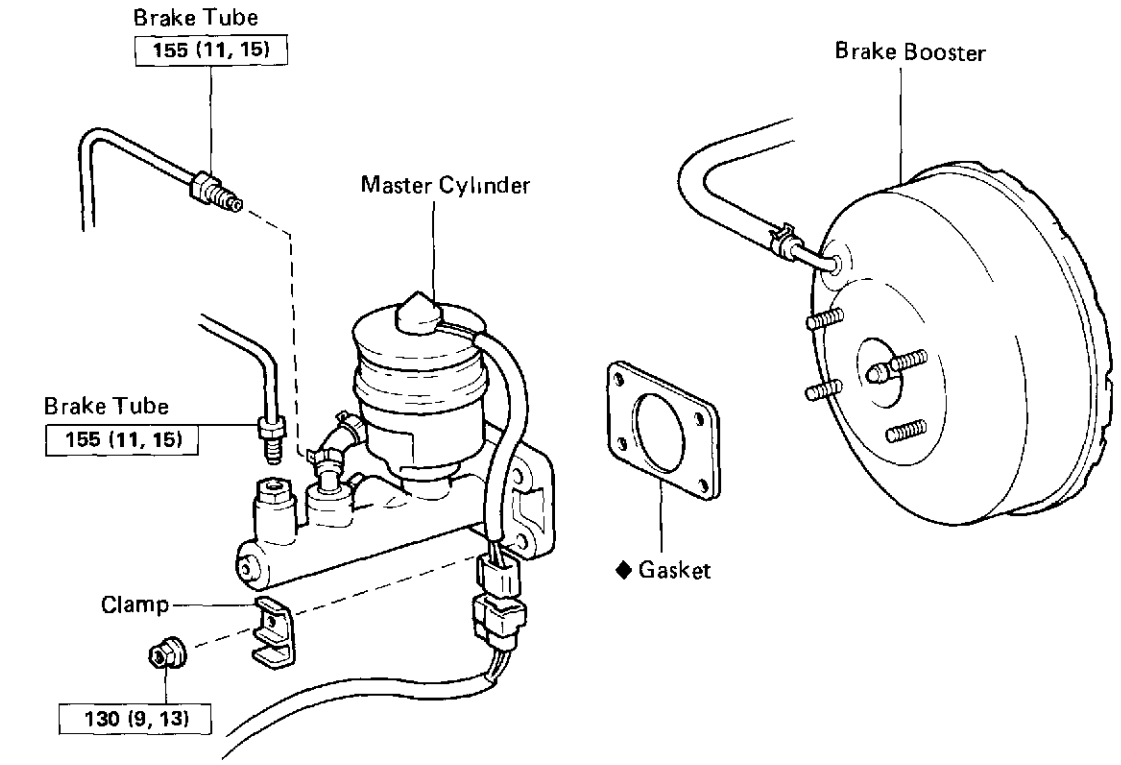

kg-cm (ft-lb, N·m) : Specified torque

◆ Non-reusable part

REMOVAL OF MASTER CYLINDER

1. **DISCONNECT LEVEL WARNING SWITCH CONNECTOR**

2. **TAKE OUT FLUID WITH SYRINGE**

   NOTICE: Do not let brake fluid remain on a painted surface. Wash it off immediately.

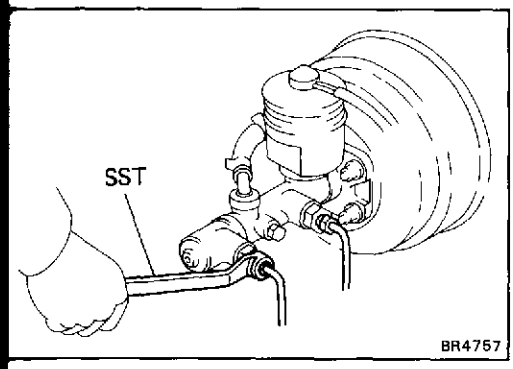

3. **DISCONNECT TWO BRAKE TUBES**

   Using SST, disconnect two brake tubes from the master cylinder.

   SST 09751-36011

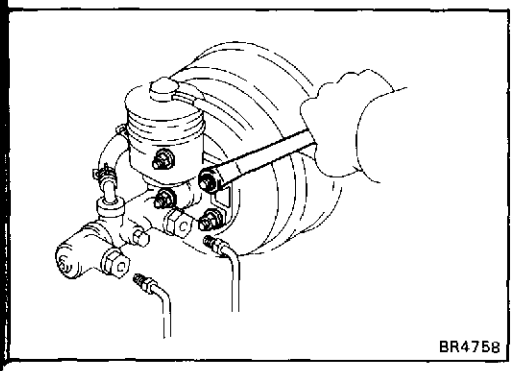

4. **REMOVE MASTER CYLINDER**

   (a) Remove the four nuts

   (b) Remove the master cylinder, clamp and gasket from the brake booster.

DISASSEMBLY OF MASTER CYLINDER

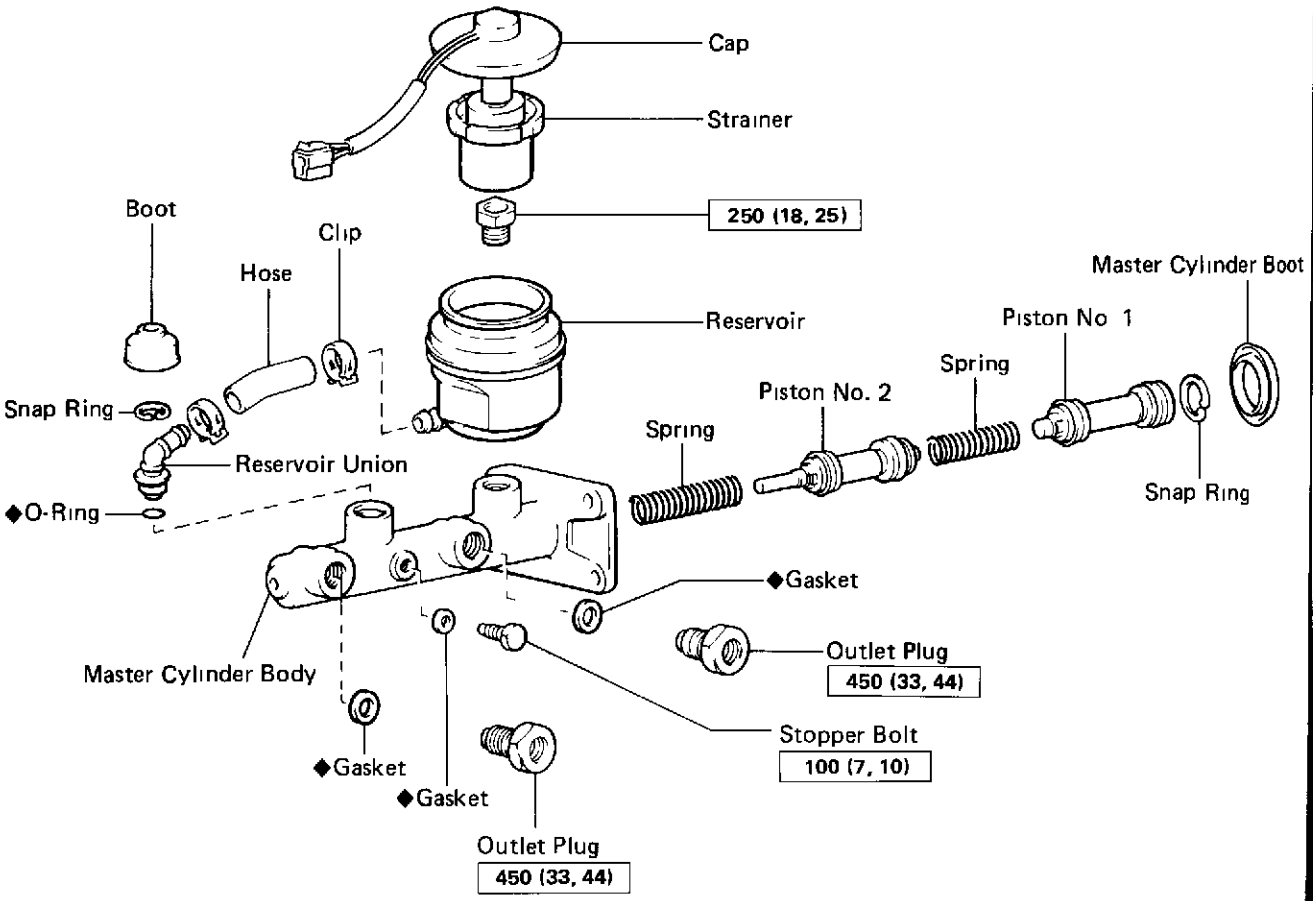

kg-cm (ft-lb, N·m) : Specified torque
◆ Non-reusable part

D3608

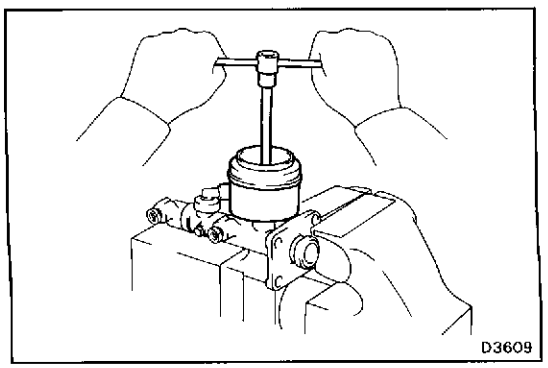

1. **PLACE CYLINDER IN VISE**

2. **REMOVE RESERVOIR AND HOSE**
   (a) Using pliers, slide the union side hose clip toward th reservoir.
   (b) Remove the cap and strainer.
   (c) Remove the set bolt from the reservoir.

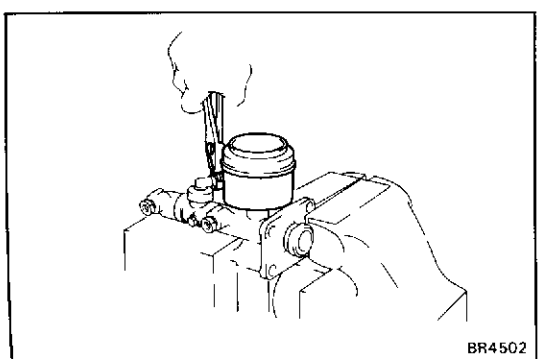

   (d) Remove the reservoir with the hose from the ma cylinder.
   (e) If necessary, remove the hose from the reserv

3. **REMOVE BOOT**

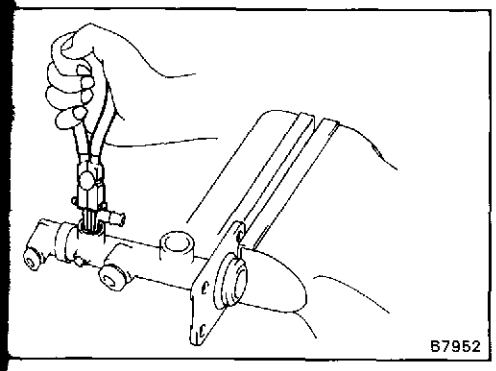

4. REMOVE RESERVOIR UNION

(a) Using snap ring pliers, remove the snap ring.

(b) Remove the reservoir union and O-ring.

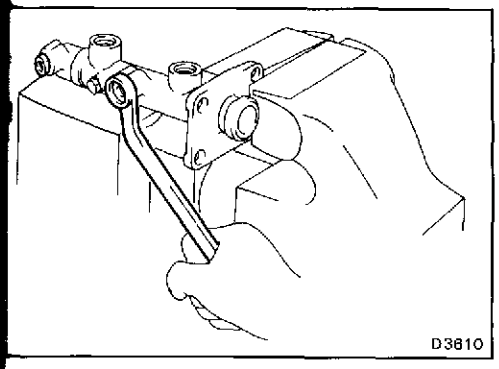

5. REMOVE OUTLET PLUGS

Remove the two outlet plugs and gaskets.

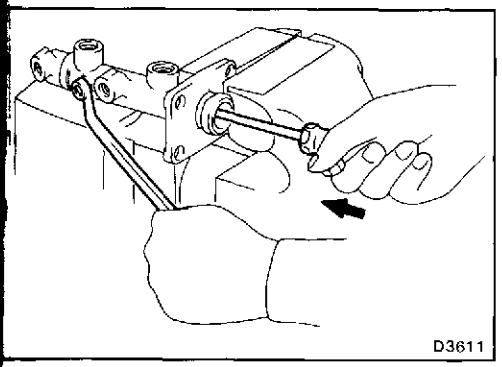

6. REMOVE PISTON STOPPER BOLT

Using a screwdriver, push the pistons in all the way, and remove the piston stopper bolt and gasket.

HINT: Tape the screwdriver tip before use.

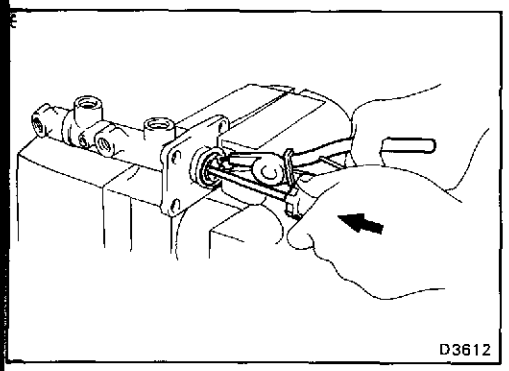

7. REMOVE TWO PISTONS AND SPRINGS

(a) Push in the piston with a screwdriver and remove the snap ring with snap ring pliers.

(b) Remove the No.1 piston and spring by hand, pulling straight out, not at an angle.

NOTICE: If pulled out at an angle, there is posibility of damaging the cylinder.

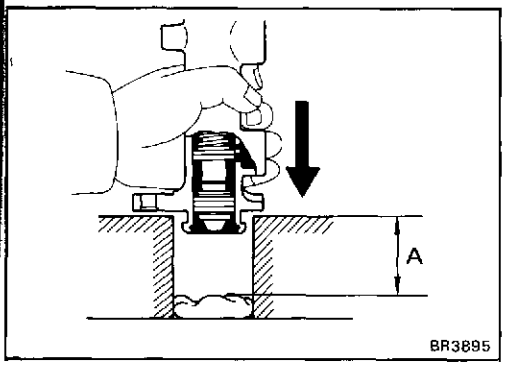

(c) Place a rag and two wooden block on the work table and lightly tap the cylinder flange against the block edges until the piston drops out of the cylinder.

HINT: Make sure the distance (A) from the rag to the top of the block is at least 100 mm (0 394 in.).

INSPECTION OF MASTER CYLINDER COMPONENTS

HINT: Clean the disassembled parts with compressed air.

1. **INSPECT CYLINDER BORE FOR RUST AND SCORING**
2. **INSPECT CYLINDER FOR WEAR OR DAMAGE**

If necessary, clean or replace the cylinder.

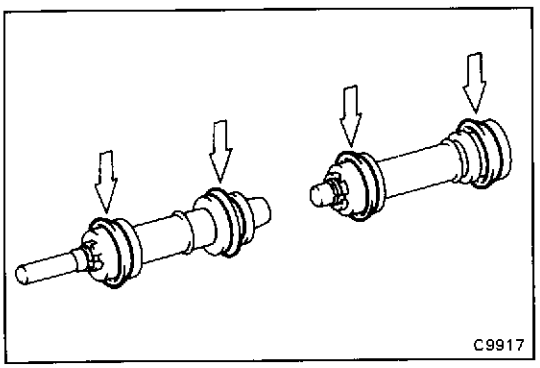
C9917

ASSEMBLY OF MASTER CYLINDER

(See page BR-12)

1. **APPLY LITHIUM SOAP BASE GLYCOL GREASE TO RUBBER PARTS INDICATED BY ARROWS**

2. **INSTALL TWO SPRING AND PISTONS**

NOTICE: Be careful not to damage the rubber lips on the pistons.

(a) Insert two springs and pistons straight in, not at an angle.

NOTICE: If inserted at an angle, there is posibility of damaging the cylinder bore.

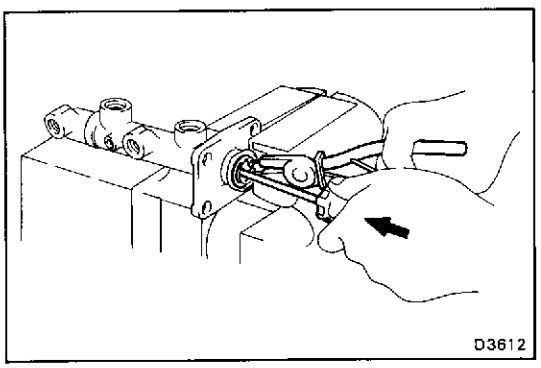
D3612

(b) Push in the piston with a screwdriver and install the snap ring with snap ring pliers.

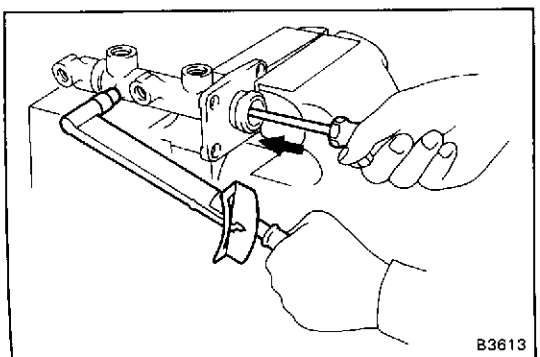
B3613

3. **INSTALL PISTON STOPPER BOLT AND NEW GASKET**

Using a screwdriver, push the pistons in all the way and install the piston stopper bolt over a new gasket.

Torque the bolt.

Torque: 100 kg-cm (7 ft-lb, 10 N·m)

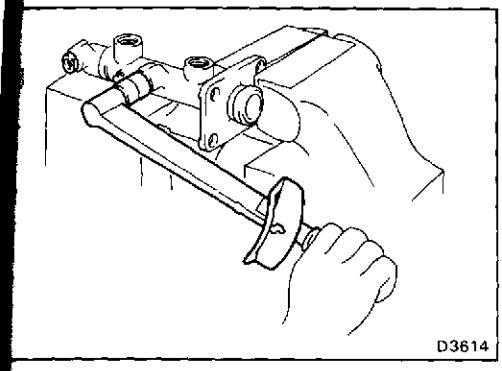

4. INSTALL OUTLET PLUGS

Install the two outlet plugs over a new gasket.

Torque the plugs.

Torque: 450 kg-cm (33 ft-lb, 44 N·m)

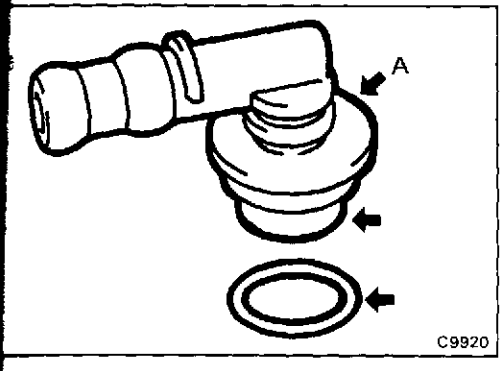

5. INSTALL RESERVOIR UNION

(a) Apply lithium soap base glycol grease to the reservoir union.

(b) Pack the lithium soap base glycol grease on the union (A)

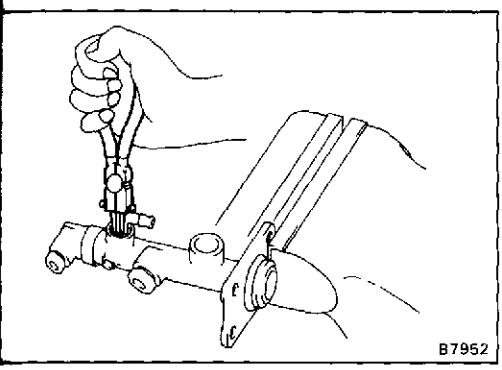

(c) Install the union to the master cylinder through the new O-ring.

(d) Using snap ring pliers, install the snap ring.

(e) Install the bolt.

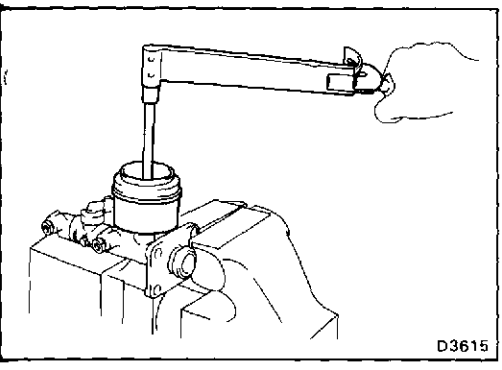

6. INSTALL RESERVOIR AND HOSE

(a) Connect the hose to union and reservoir

(b) Install the reservoir on the master cylinder with the "MAX" mark facing toward the front.

(c) Install the gasket and torque the bolt.

Torque: 250 kg-cm (18 ft-lb, 25 N·m)

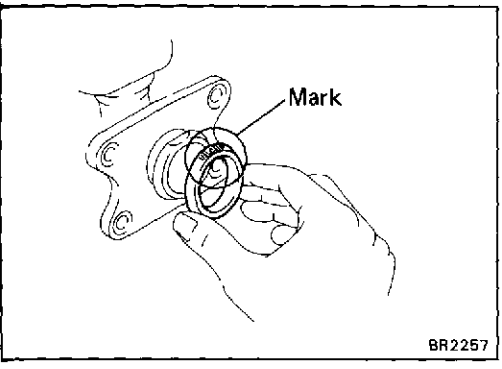

7. CLEAN OUT GROOVE ON LOWER INSTALLATION SURFACE OF MASTER CYLINDER

8. CONFIRM THAT " UP " MARK ON MASTER CYLINDER BOOT IS IN CORRECT POSITION

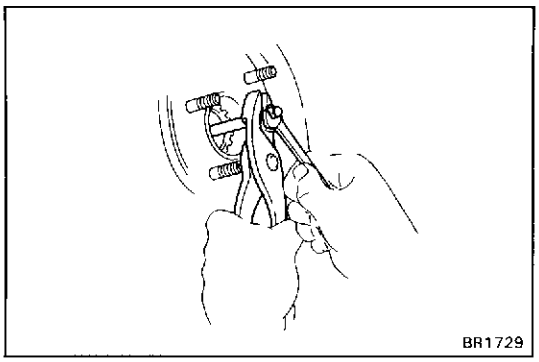

INSTALLATION OF MASTER CYLINDER

1. **ADJUST LENGTH OF BRAKE BOOSTER PUSH ROD BEFORE INSTALLING MASTER CYLINDER**
(See page BR-47)

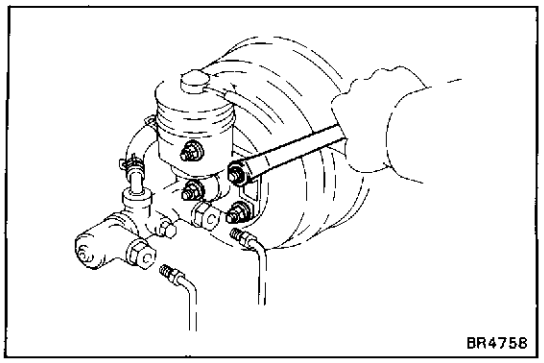

2. **INSTALL MASTER CYLINDER**

Install the master cylinder and clamp on the brake booster with the four nuts over a new gasket.

Torque: 130 kg-cm (9 ft-lb, 13 N·m)

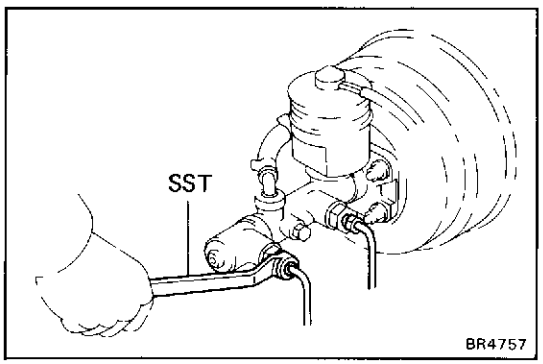

3. **CONNECT TWO BRAKE TUBES**

(a) Finger tighten the union nuts.

(b) Using SST, torque the union nuts.

SST 09751-36011

Torque: 155 kg-cm (11 ft-lb, 15 N·m)

4. **CONNECT LEVEL WARNING SWITCH CONNECTOR**

5. **FILL BRAKE RESERVOIR WITH BRAKE FLUID AND BLEED BRAKE SYSTEM**
(See page BR-7)

6. **CHECK FOR FLUID LEAKAGE**

7. **CHECK AND ADJUST BRAKE PEDAL**

BRAKE BOOSTER

REMOVAL OF BRAKE BOOSTER

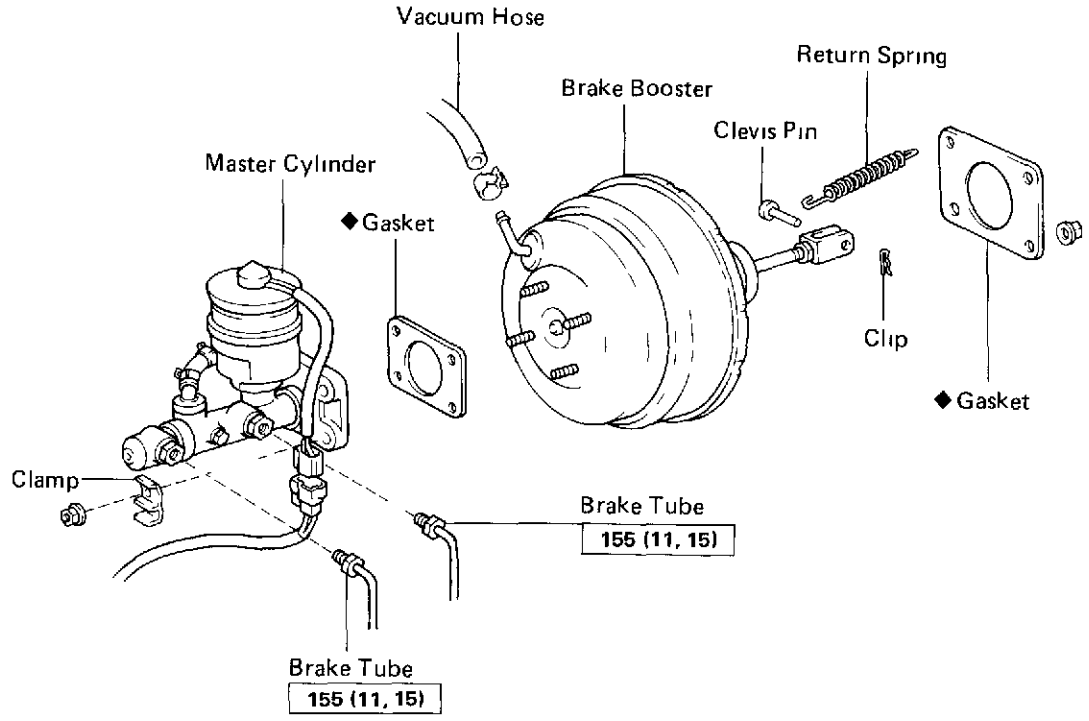

kg-cm (ft-lb, N·m) : Specified torque
♦ Non-reusable part

BR4442

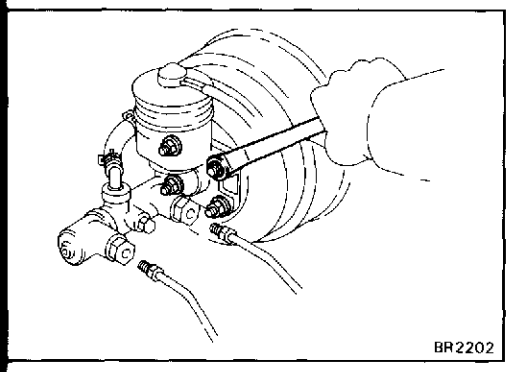

BR2202

1. **REMOVE MASTER CYLINDER**
   (See page BR-10)

2. **DISCONNECT VACUUM HOSE FROM BRAKE BOOSTER**

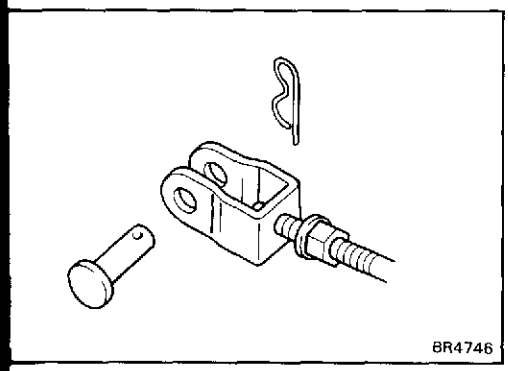

BR4746

3. **DISCONNECT BRAKE PEDAL FROM CLEVIS**
   (a) Remove the return spring.
   (b) Remove the clip.
   (c) Loosen the lock nut.
   (d) Remove the clevis pin.

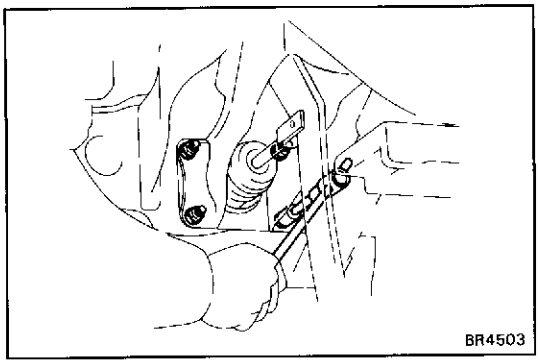

4. REMOVE BRAKE BOOSTER

(a) Remove the four nuts.

(b) Remove the clevis.

(c) Pull out the brake booster to underside.

Brake Booster

AISIN Type Single Booster

COMPONENTS

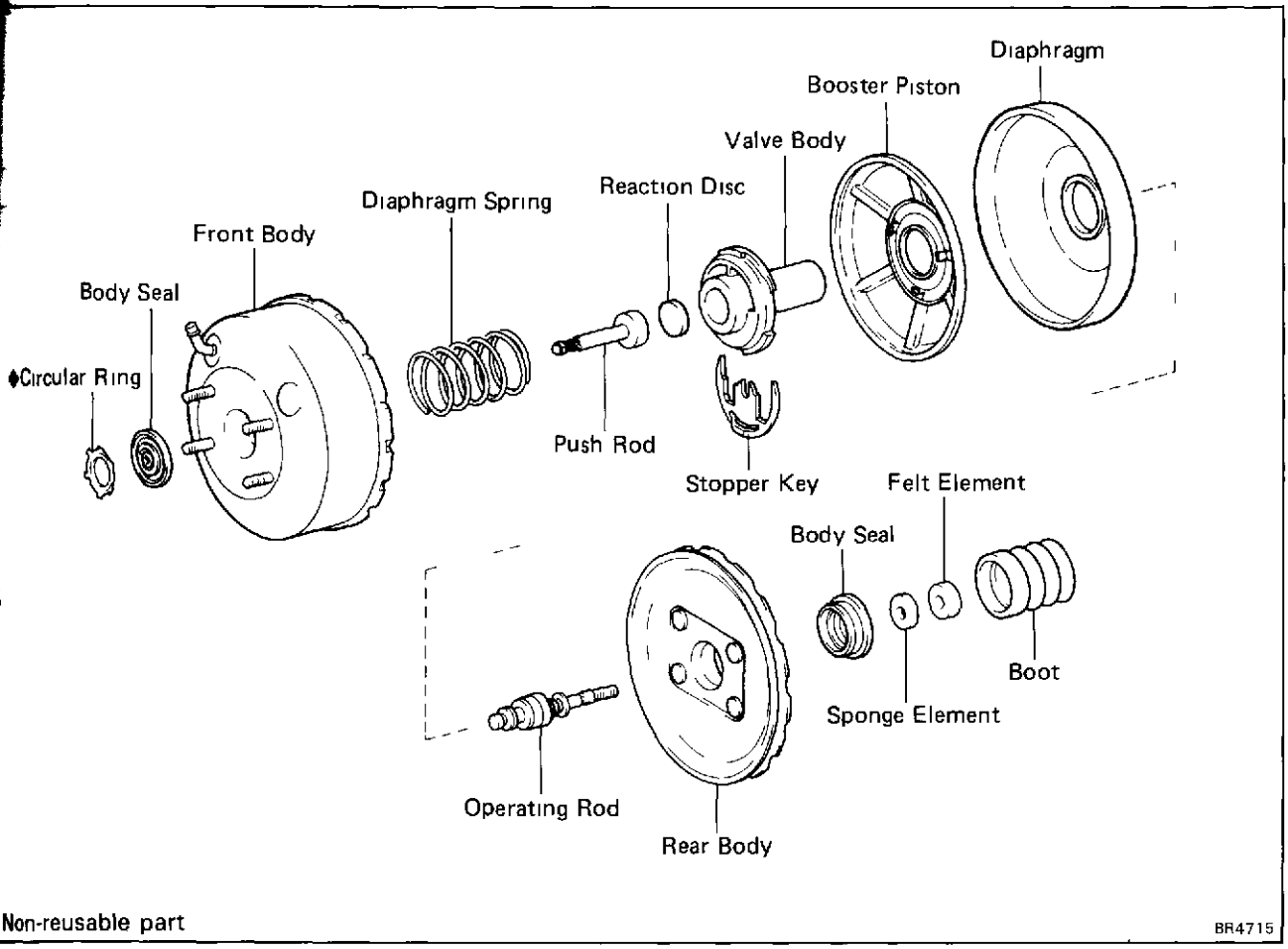

◆ Non-reusable part

BR4715

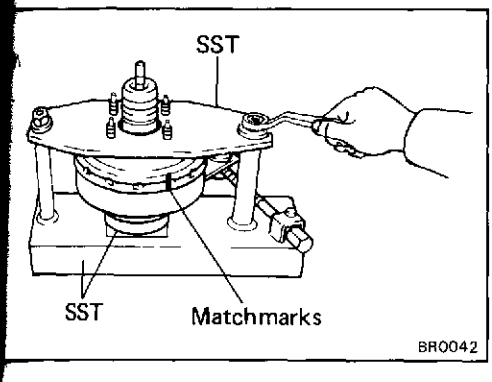

BR0042

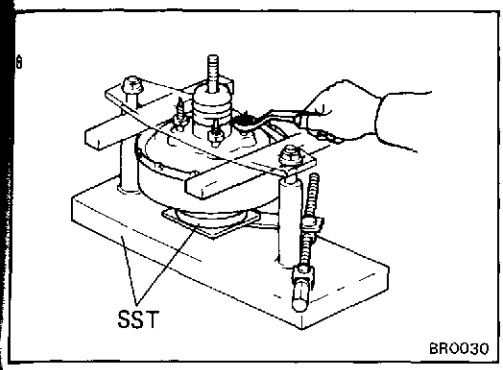

BR0030

DISASSEMBLY OF BRAKE BOOSTER

1. SEPARATE FRONT AND REAR BODIES

(a) Put matchmarks on the front and rear bodies.

(b) Set the booster in SST.

SST 09753-00013 and 09753-40010

NOTICE: Be careful not to tighten the two nuts of SST too tight.

(c) Turn the front body clockwise until the front and rear bodies separate

(d) Loosen the upper left and right nuts of SST, and insert pieces of wood between the front body and upper plate.

NOTICE: Be careful that the pieces of wood do not contact the rear body.

(e) Evenly tighten down the four booster mounting nuts to separate the front and rear bodies.

(f) Remove the diaphragm spring and push rod

2. REMOVE BOOT FROM REAR BODY

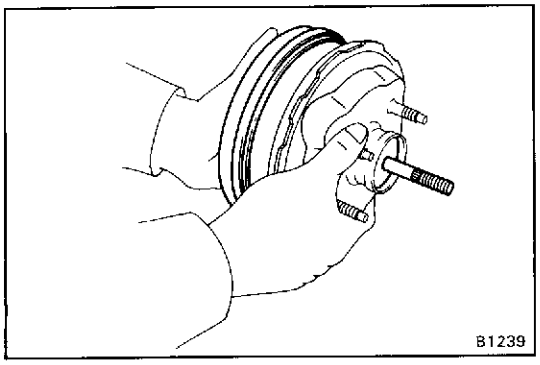

3. REMOVE DIAPHRAGM ASSEMBLY FROM REAR BODY

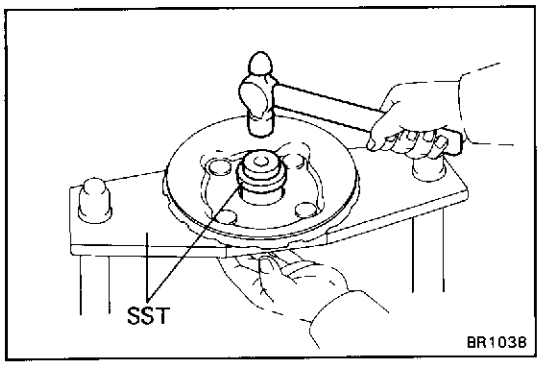

4. REMOVE BODY SEAL FROM REAR BODY

Using SST, remove the seal

SST 09753-00013 and 09753-30020

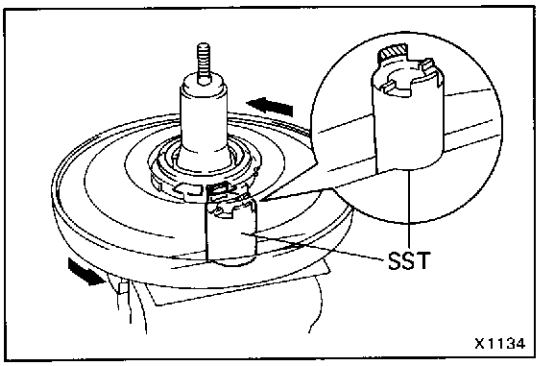

5. REMOVE VALVE BODY AND DIAPHRAGM FRO BOOSTER PISTON

(a) Mount SST in vise.

SST 09736-27010

(b) Put the diaphragm assembly on SST and turn it separate the valve body and booster piston.

(c) Remove the diaphragm from the booster piston.

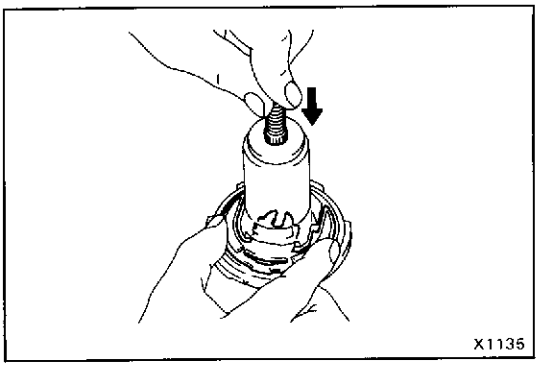

6. REMOVE OPERATING ROD FROM VALVE BODY

(a) Push the operating rod in the valve body and rem the stopper key.

(b) Pull out the operating rod with the two elemen

7. REMOVE REACTION DISC FROM VALVE BODY

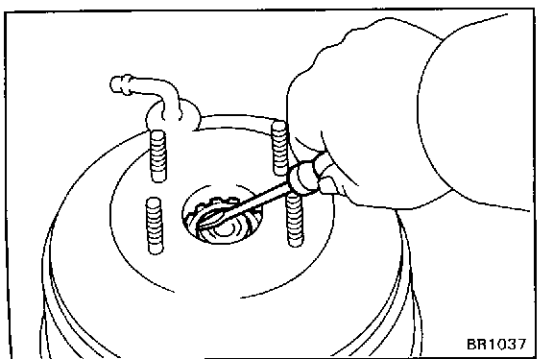

8. REMOVE BODY SEAL FROM FRONT BODY

Using a screwdriver, pry out the circular ring, and re the seal.

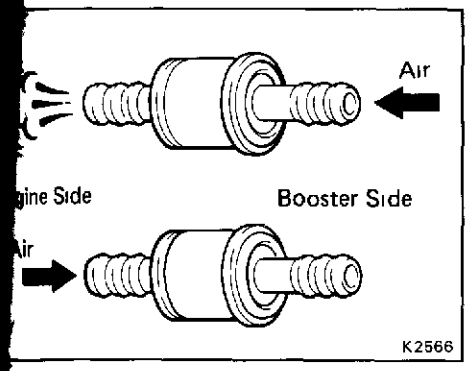

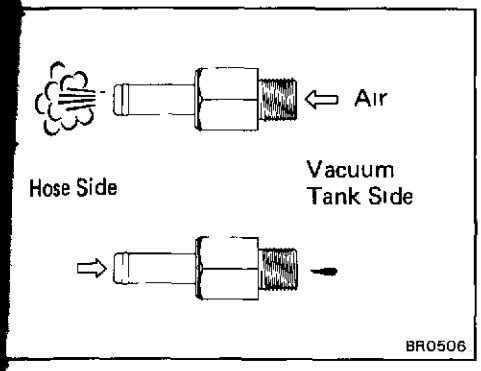

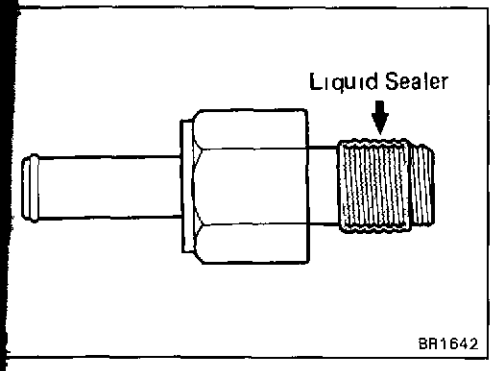

INSPECTION OF BRAKE BOOSTER COMPONENTS

INSPECT CHECK VALVE OPERATION

(Gasoline Engine)

(a) Remove the check valve.

(b) Check that air flows from the booster side to the engine side.

(c) Check that air does not flow from the engine side to the booster side.

If necessary, replace the check valve.

(d) Install the check valve.

(Diesel Engine)

(a) Remove the check valve from the vacuum line.

(b) Check that air flows from the vacuum tank side to the hose side.

(c) Check that air dose not flow from the hose side to the vacuum tank side.

If necessary, replace the check valve.

(d) Apply liquid sealer to the check valve as shown.

Sealant: Part No. 08826-00080 or equivalent

(e) Install the check valve.

Torque: 300 kg-cm (22 ft-lb, 29 N·m)

(f) Install the vacuum hose to the check valve with hose clamp.

ASSEMBLY OF BRAKE BOOSTER

(See page BR-19)

1. APPLY SILICONE GREASE TO PARTS SHOWN BELOW

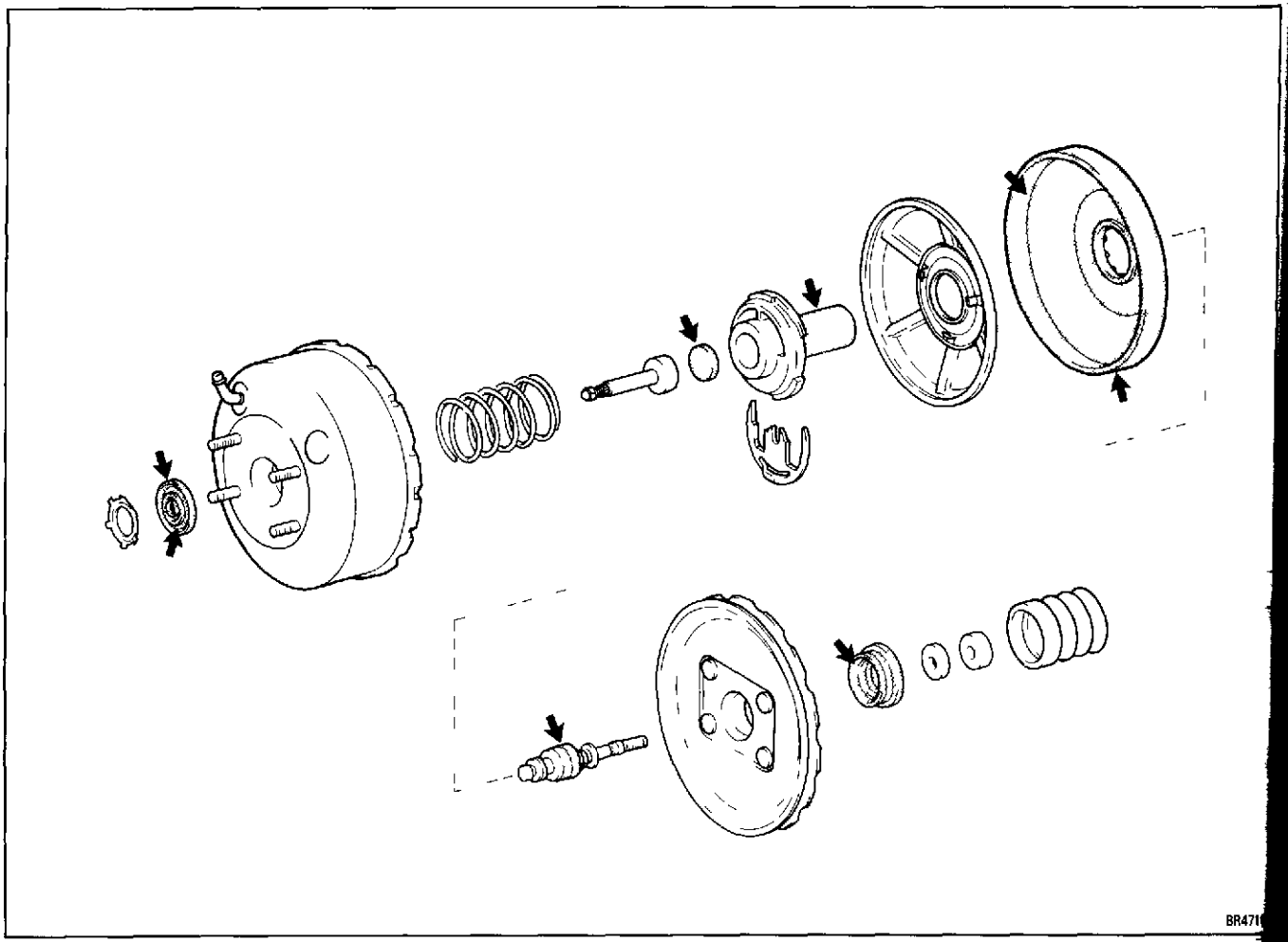

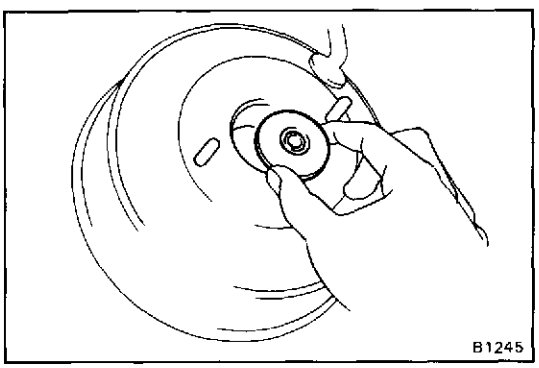

2. INSTALL BODY SEAL TO FRONT BODY
   (a) Place the body seal in position.
   (b) Secure the body seal with the circular ring.

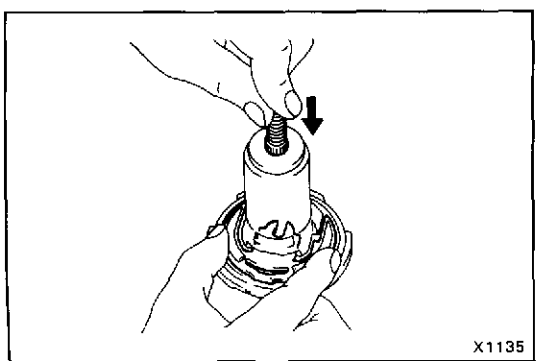

3. INSTALL OPERATION ROD TO VALVE BODY
   (a) Insert the operation rod in the valve body.
   (b) Push the operation rod in the valve body and inst the stopper key.

   HINT: Install the stopper key as the stopper rubber the key facing upward.

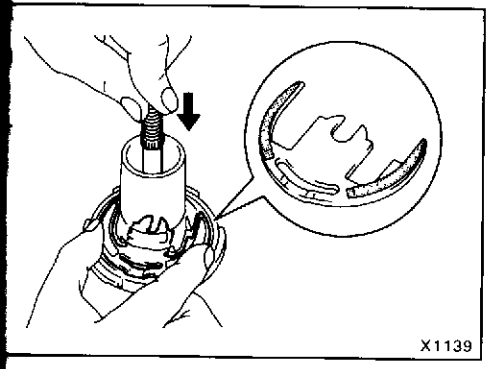

(c) Pull the operation rod and confirm that the stopper key is working.

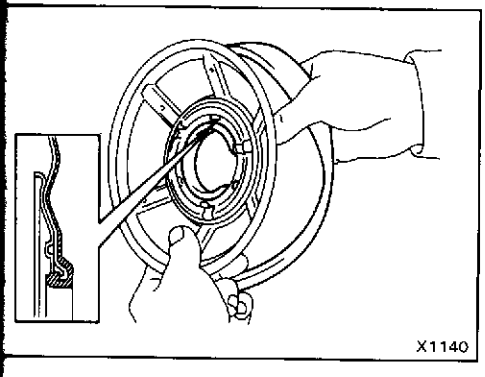

4. INSTALL VALVE BODY AND DIAPHRAGM TO BOOSTER PISTON

(a) Install the diaphragm to the booster piston as shown.

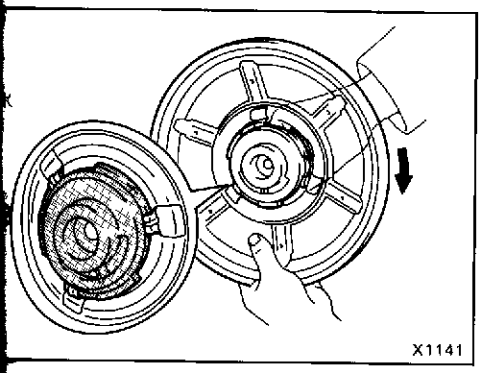

(b) Insert the valve body to the booster piston and turn the valve body as shown.

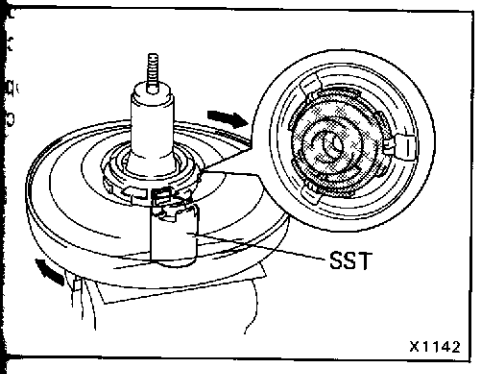

(c) Tape the protrusion of SST and mount it in vise.

SST 09753-30011

(d) Put the assembly on SST and turn the booster piston clockwise until it locks.

HINT: Turn the booster piston as the piston keeps horizontal condition.

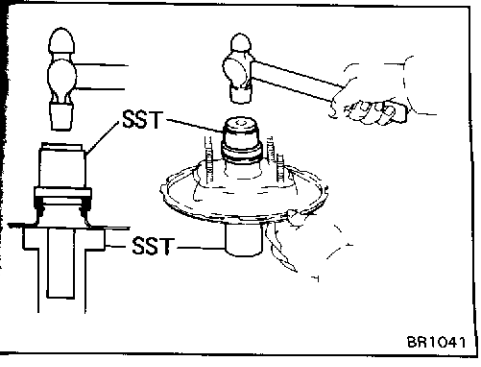

5. INSTALL BODY SEAL TO REAR BODY

Using SST, drive in the seal.

SST 09309-36010 and 09753-30020

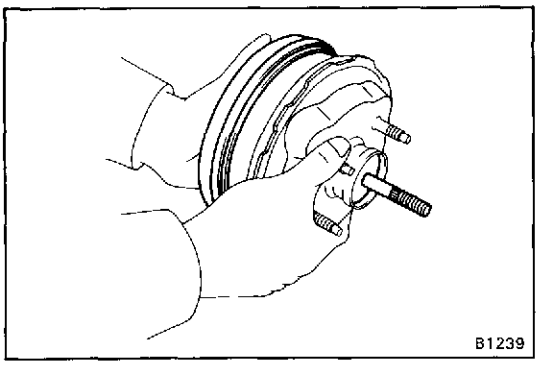

6. INSTALL DIAPHRAGM ASSEMBLY TO REAR BODY

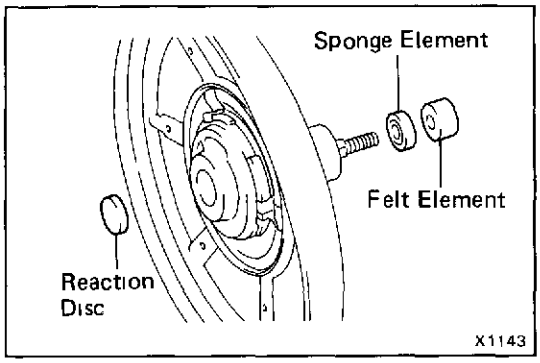

7. INSTALL FOLLOWING PARTS TO REAR BODY

(a) Felt element

(b) Sponge element

(c) Boot

8. INSTALL REACTION DISC TO VALVE BODY

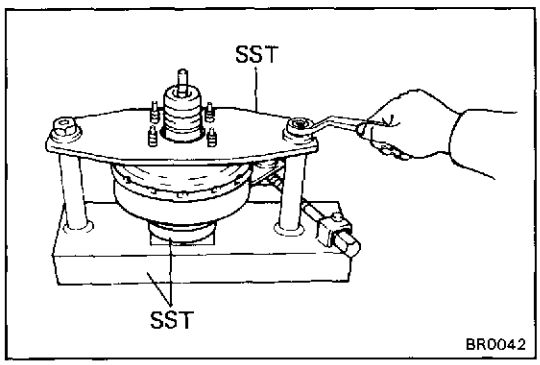

9. ASSEMBLE FRONT AND REAR BODIES

(a) Place the spring and push rod in the front body.

(b) Using SST, compress the spring between the fro and rear bodies.

SST 09753-00013 and 09753-40010

NOTICE: Be careful not to tighten the two nuts of S too tight.

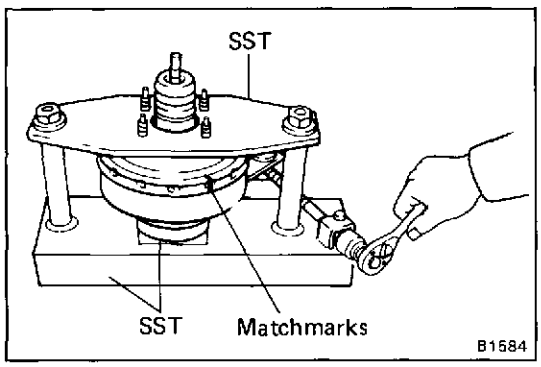

(c) Assemble the front and rear bodies by turning the fr body counterclockwise until the matchmarks mat

HINT: If the front body is too tight to be turned, ap more silicone grease on the diaphragm edge that conta the front and rear bodies.

AISIN Type Tandem Booster

COMPONENTS

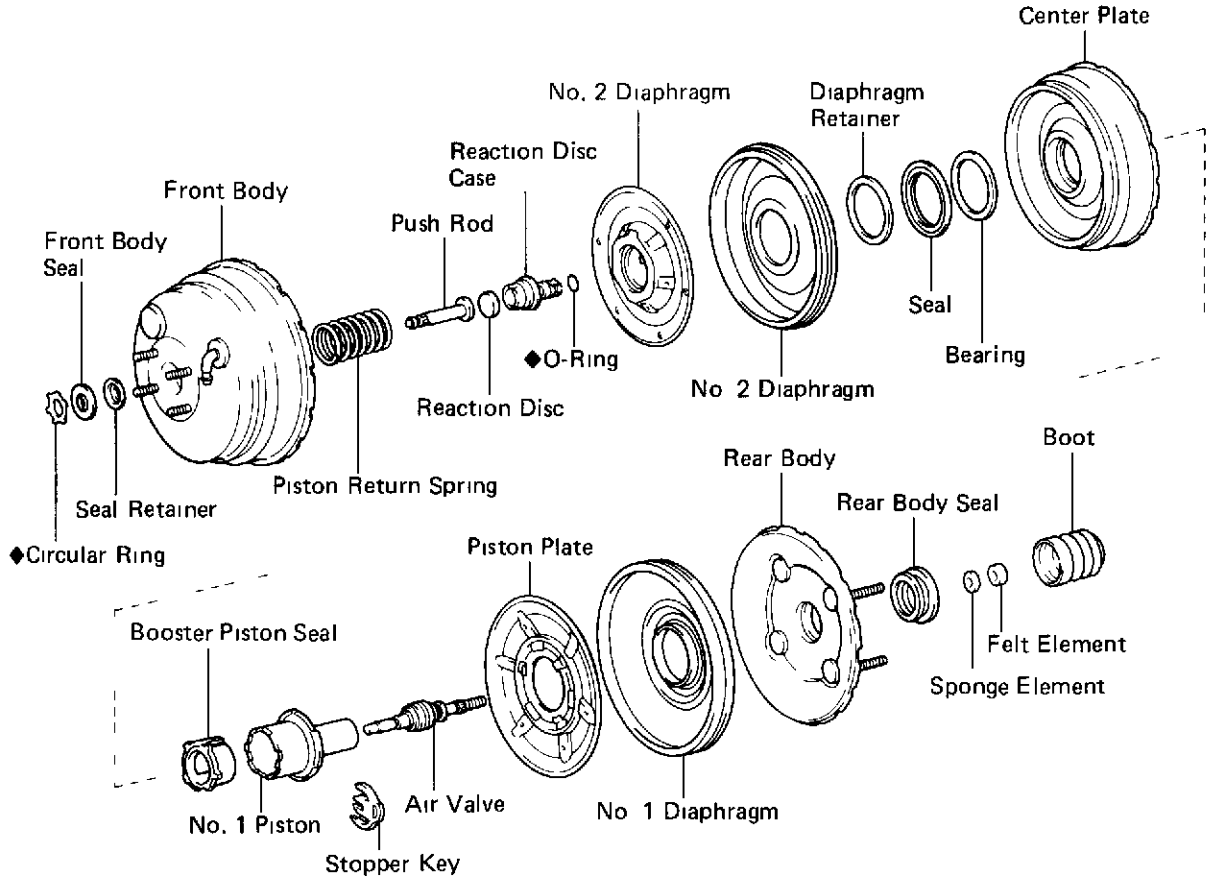

◆ Non-reusable part

BR4717

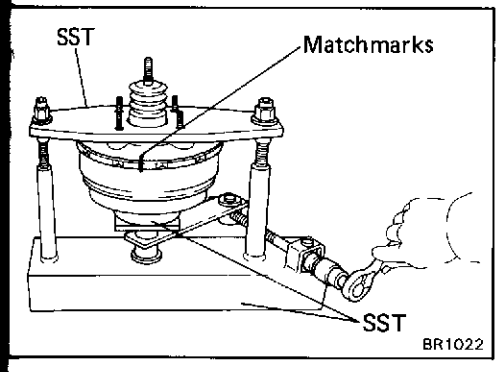

DISASSEMBLY OF BRAKE BOOSTER

1. **REMOVE CLEVIS AND LOCK NUT**

2. **SEPARATE FRONT AND REAR BODIES**

   (a) Set the booster in SST.

   SST 09753-00013 and 09753-40010

   (b) Put matchmarks on the front and rear bodies

   NOTICE: Be careful not to tighten the two nuts of SST too tight.

   (c) Turn the front body clockwise to separate the front and rear bodies.

   (d) Remove the rear body, push rod and piston return spring from the front body.

3. **REMOVE BOOT FROM REAR BODY**

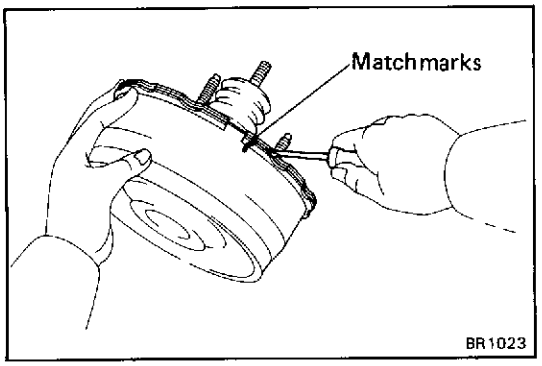

4. REMOVE REAR BODY FROM CENTER PLATE ASSEMBL

Before separating, put matchmarks on the rear body an center plate assembly.

Using a screwdriver, separate and remove the rear bod from center plate assembly.

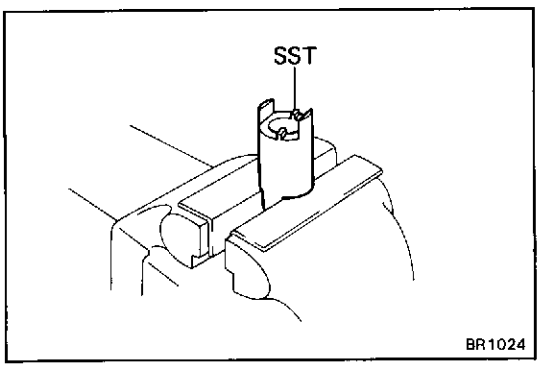

5. REMOVE NO.1 DIAPHRAGM AND PISTON PLATE FRO CENTER PLATE ASSEMBLY

(a) Mount SST in vise.

SST 09753-30011

(b) Set the center plate assembly on SST.

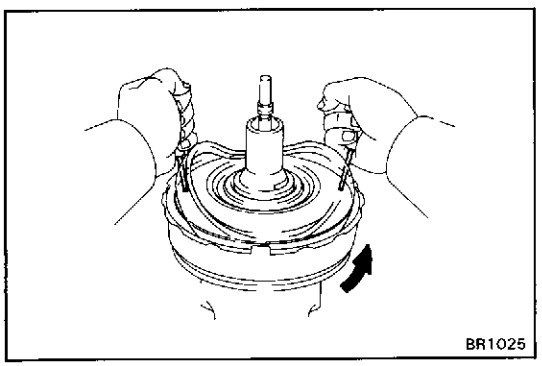

(c) Fold the No.1 diaphragm upward, insert two p punches into the holes on the piston plate.

(d) Turn the piston plate counterclockwise until the pist plate and No.1 diaphragm separate from the cent plate assembly, and remove them.

(e) Separate the No.1 diaphragm from the piston pla

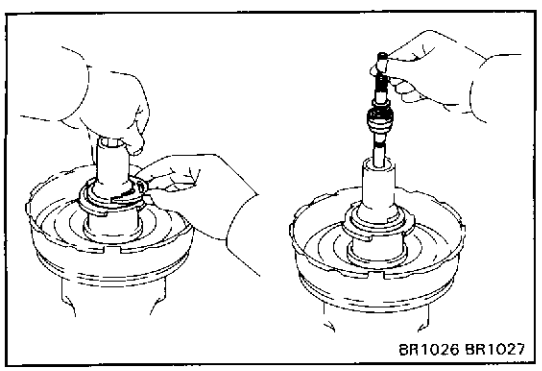

6. REMOVE STOPPER KEY AND AIR VALVE

(a) Push in the valve operating rod and pull out the va stopper key.

(b) Remove the air valve from the No 1 piston with sponge and felt element.

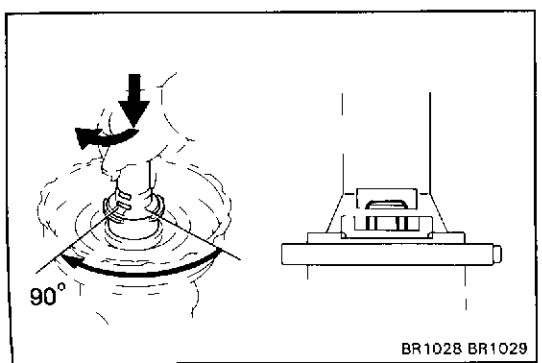

7. DISASSEMBLE CENTER PLATE ASSEMBLY

(a) While pushing in the No.1 piston, turn it a quarte one turn and check that the sight in the stopper hole is as shown in the illustration.

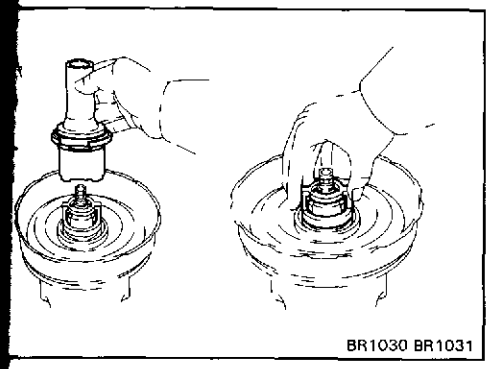
BR1030 BR1031

(b) Remove the No.1 piston from the No.2 piston.
(c) Remove the booster piston seal from the No.1 piston

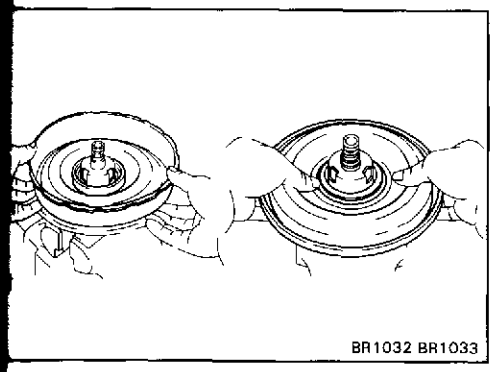
BR1032 BR1033

(d) Remove the center plate.
(e) Remove the No.2 diaphragm and No.2 piston.
(f) Remove the No.2 diaphragm from the No.2 piston.
(g) Remove the diaphragm retainer from the No.2 diaphragm.

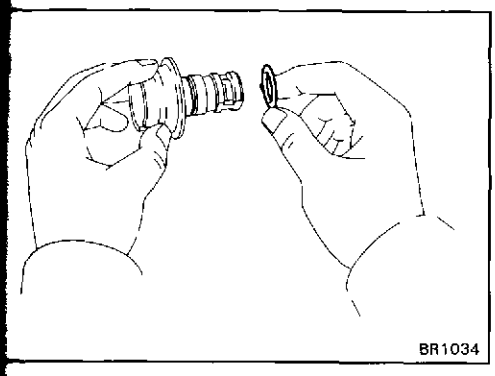
BR1034

8. REMOVE REACTION DISC AND O-RING

(a) Push out the reaction disc from the reaction disc case.
(b) Remove the O-ring from the reaction disc case.

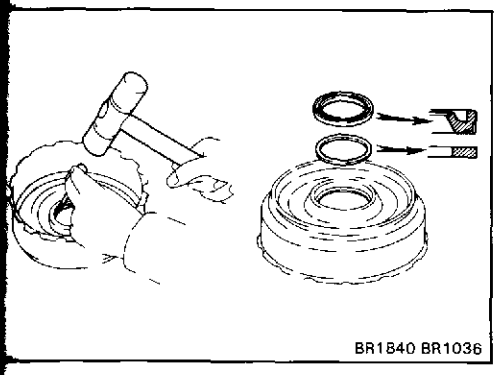
BR1840 BR1036

9. REMOVE CENTER PLATE BEARING AND SEAL

Using a screwdriver, tap out the bearing and seal.

NOTICE: Be careful not to scratch the center plate.

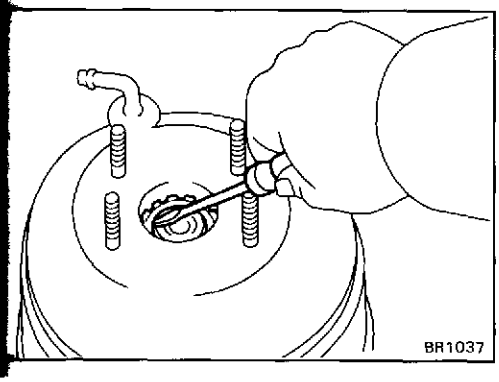
BR1037

10. REMOVE BODY SEAL FROM FRONT BODY

Using a screwdriver, pry out the circular ring, and remove the front body seal Then remove the seal retainer from the seal.

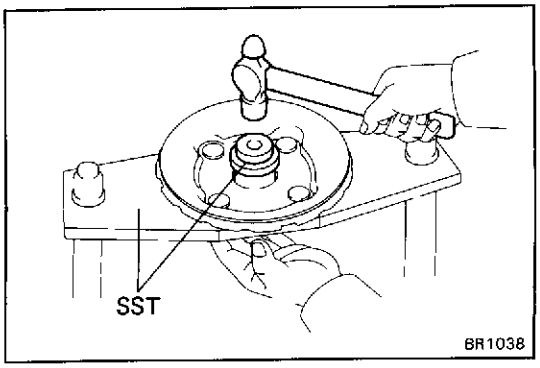

11. REMOVE BODY SEAL FROM REAR BODY

Using SST, tap out the body seal from the rear body.

SST 09753-00013 and 09753-30020

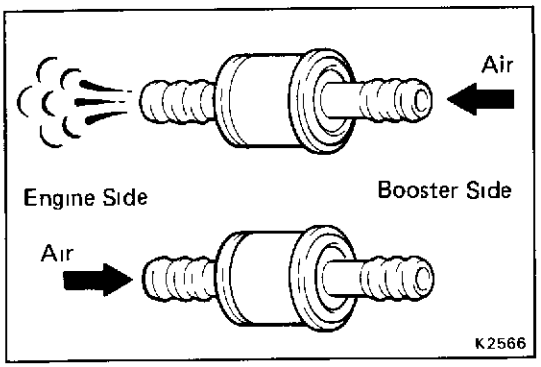

INSPECTION OF BRAKE BOOSTER COMPONENTS

INSPECT CHECK VALVE OPERATION

(a) Remove the check valve.

(b) Check that air flows the booster side to the engine side.

(c) Check that air does not flow from the engine side to the booster side

If necessary, replace the check valve.

(d) Install the check valve.

ASSEMBLY OF BRAKE BOOSTER

(See page BR-25)

1. APPLY SILICONE GREASE TO PARTS SHOWN BELOW

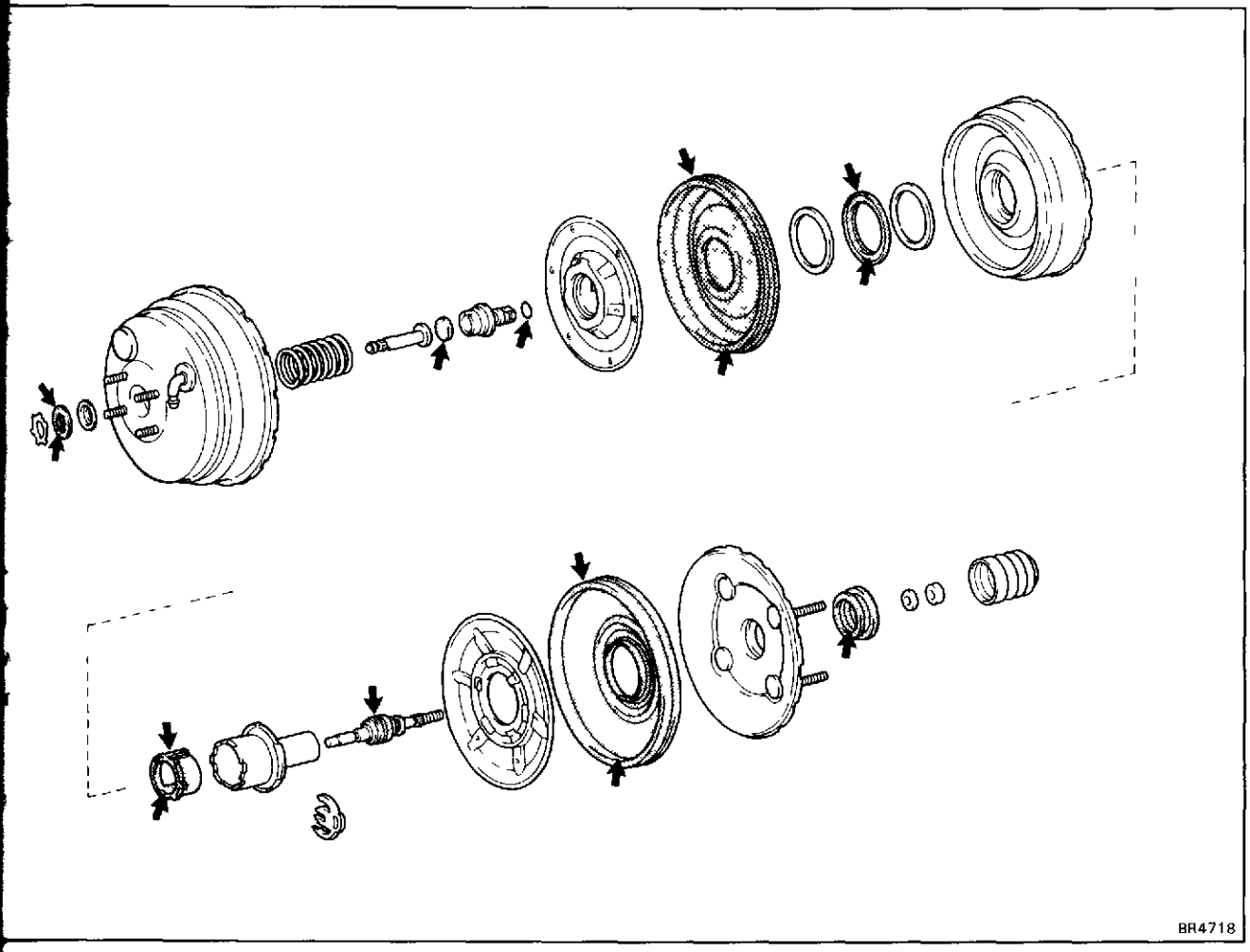

BR4718

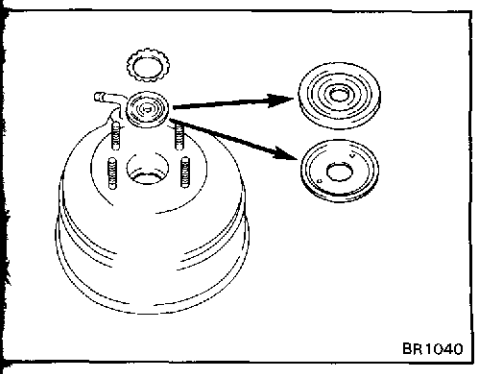

BR1040

2. INSTALL BODY SEAL TO FRONT BODY
   (a) Install the seal retainer to the body seal.
   (b) Install the body seal to the front body.
   (c) Secure the body seal with the circular ring.

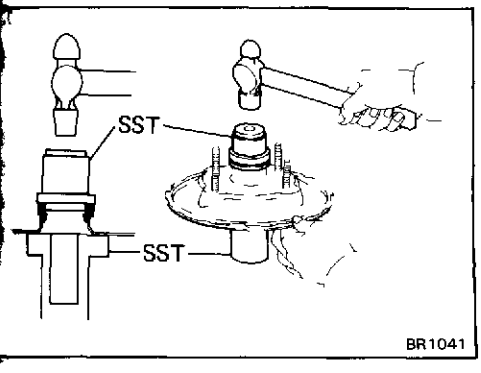

BR1041

3. INSTALL BODY SEAL TO REAR BODY
   (a) Apply silicone grease to the rubber portion of the body seal.
   (b) Using SST, install the body seal.

   SST 09309-36010 and 09753-30020

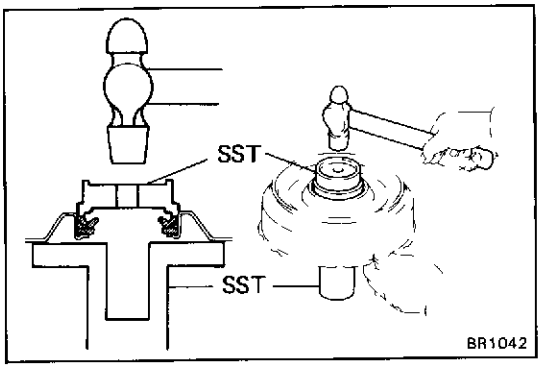

4. INSTALL CENTER PLATE BEARING AND SEAL

(a) Apply silicone grease to the seal.

(b) Using SST, install the bearing and seal in position.

SST 09309-36010 and 09608-10010

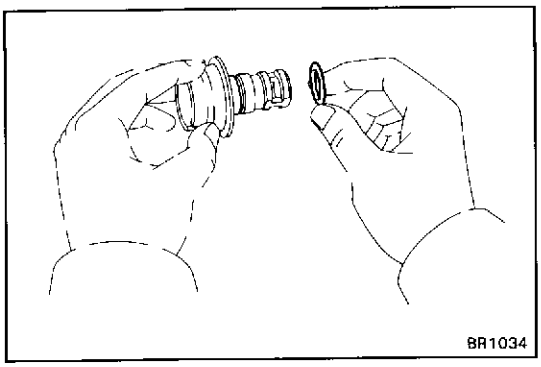

5. INSTALL O-RING TO REACTION DISC CASE

(a) Install new O-ring to the reaction disc case.

(b) Apply silicone grease to the O-ring portion.

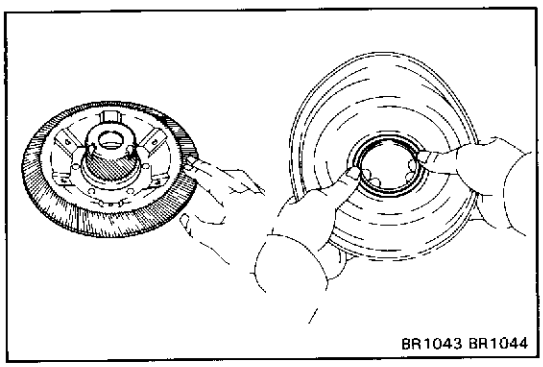

6. ASSEMBLE CENTER PLATE ASSEMBLY

(a) Apply silicone grease to the No 2 piston as shown

(b) Install diaphragm retainer to the No.2 diaphragm.

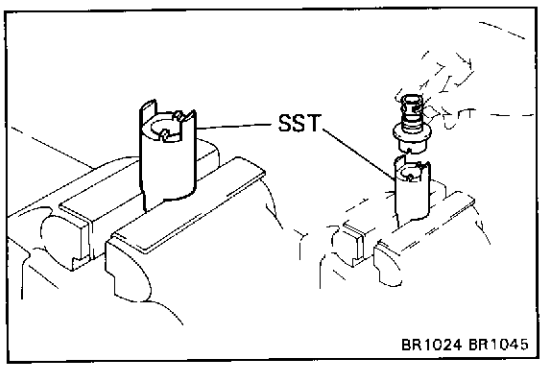

(c) Mount SST in vise.

SST 09753-30011

(d) Put the reaction disc case on SST.

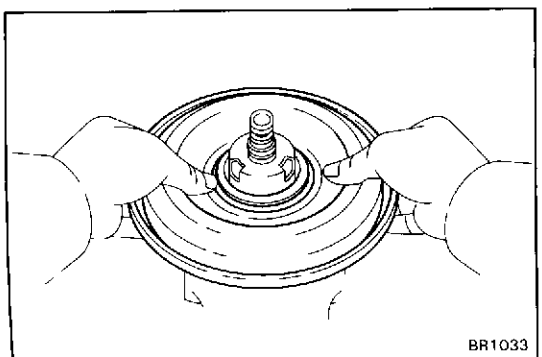

(e) Install the No.2 piston to the case, and install the N diaphragm.

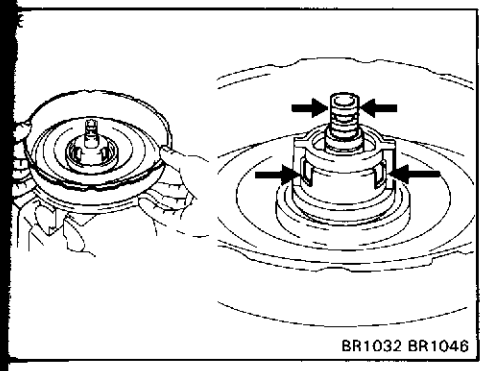
BR1032 BR1046

(f) Install the center plate and hook the No.2 diaphragm to the center plate outside ditch.

(g) Check that the positions of the reaction disc case and No.2 piston are as shown.

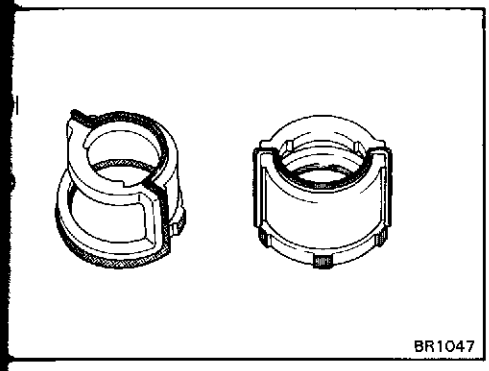
BR1047

(h) Apply silicone grease to the booster piston seal as shown.

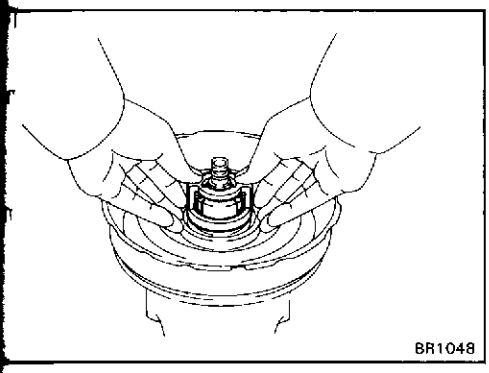
BR1048

(i) Install the booster piston seal as shown, and check that there is no clearance between the No.2 piston and booster piston seal.

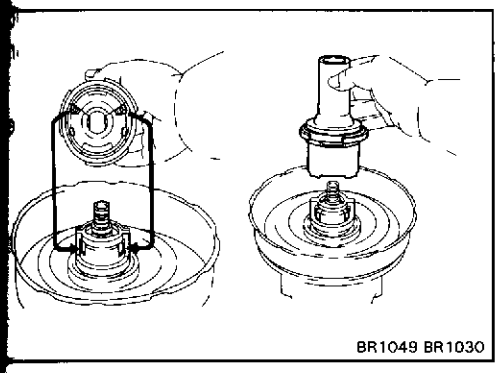
BR1049 BR1030

(j) Align the two holes of the No.2 piston and the matching protrusions on the No.1 piston as well as the cut portion of the reaction disc case head and matching portion inside the No.1 piston and install the No.1 piston.

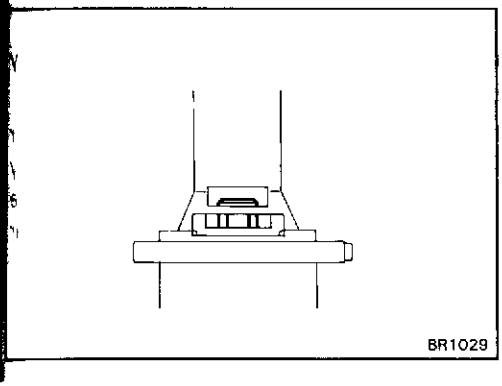
BR1029

(k) Check that the sight in the stopper key hole is as shown in the illustration.

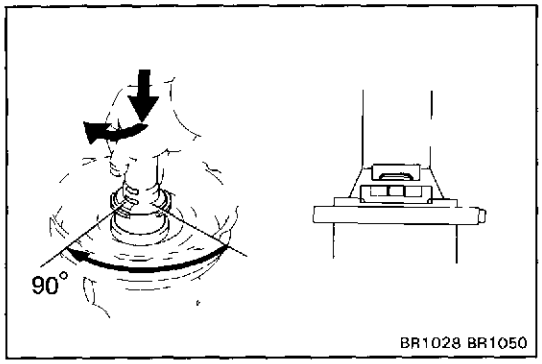

(l) While pushing in the No. 1 piston, turn it a quarter of one turn, and check that the sight in the stopper key hole is as shown in the illustration.

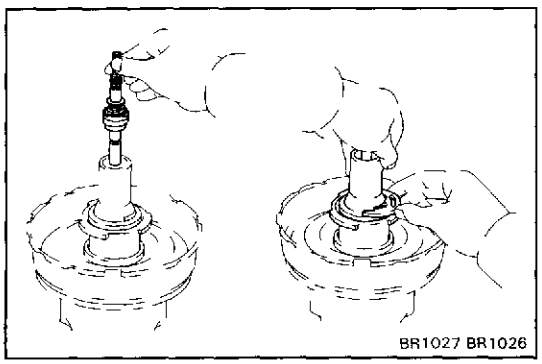

7. INSTALL AIR VALVE AND STOPPER KEY

(a) Install the air valve to the No. 1 piston

(b) Push in the valve operating rod and install the valve stopper key.

HINT. Install the stopper key as the stopper rubber on the key facing upward.

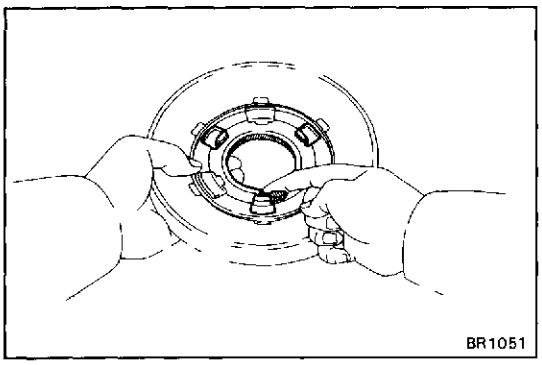

8. INSTALL NO.1 DIAPHRAGM AND PISTON PLATE TO CENTER PLATE ASSEMBLY

(a) Apply silicone grease to the piston plate where the No. 1 diaphragm contacts.

(b) Install the No. 1 diaphragm to the piston plate

(c) Apply silicone grease to the piston plate subassembly, where the No. 1 piston contacts as shown.

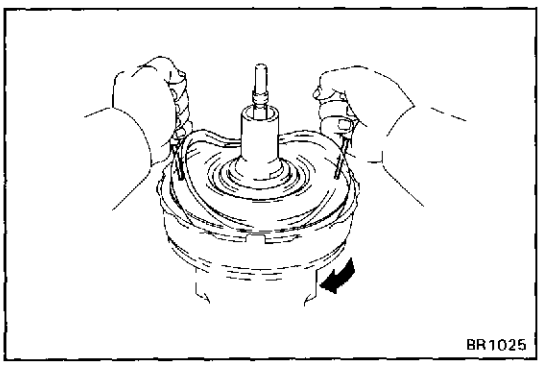

(d) Install the piston plate subassembly in place, and f the No. 1 diaphragm upward, insert the two punches into the holes on the piston plate.

(e) Push in and turn the piston plate clockwise until plate locks.

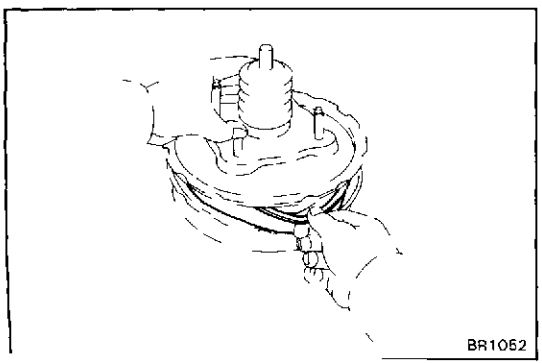

9. INSTALL REAR BODY TO CENTER PLATE ASSEMB

(a) Apply silicone grease to the inside of the rear b seal where the No. 1 piston contacts.

(b) Align the matchmarks, and temporarily install the body and align the four cut portions of the rear and protrusions of the center plate. Then lift u rear body and install the No. 1 diaphragm to the body outside ditch.

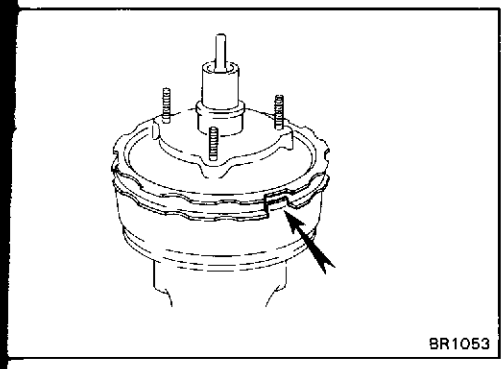
BR1053

(c) Recheck that the four cut portions of the rear body are in alignment with the protrusions of the center plate, and install the rear body.

(d) Install the sponge element, felt element and boot to the No.1 piston.

(e) Apply silicone grease to the reaction disc and install it to the reaction disc case

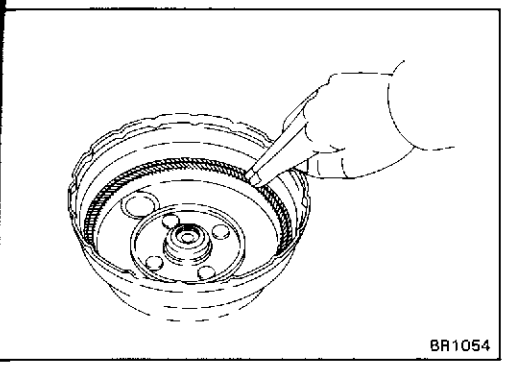
BR1054

10. ASSEMBLE FRONT AND REAR BODIES

(a) Apply silicone grease to the front body as shown

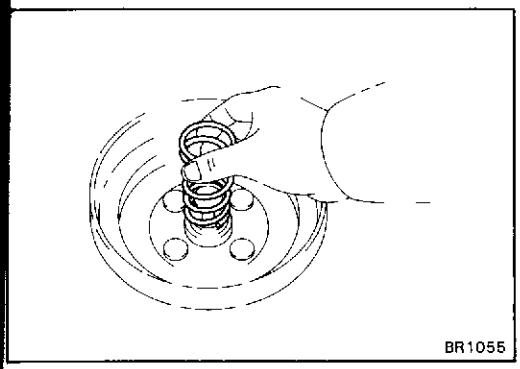
BR1055

(b) Place the front body on SST.

SST 09753-00013 and 09753-40010

(c) Place the spring and push rod in the front body.

(d) Place the rear body assembly in the front body.

(e) Using SST, compress the piston return spring between the front and rear bodies

NOTICE: Be careful not to tighten the two nuts of SST too tight.

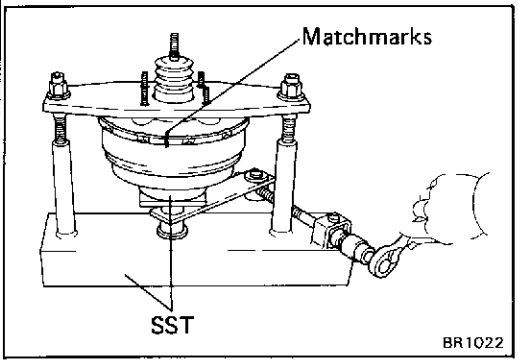

BR1022

(f) Assemble the front and rear bodies by turning the front body counterclockwise until the matchmarks match.

JKC Type Single Booster

COMPONENTS

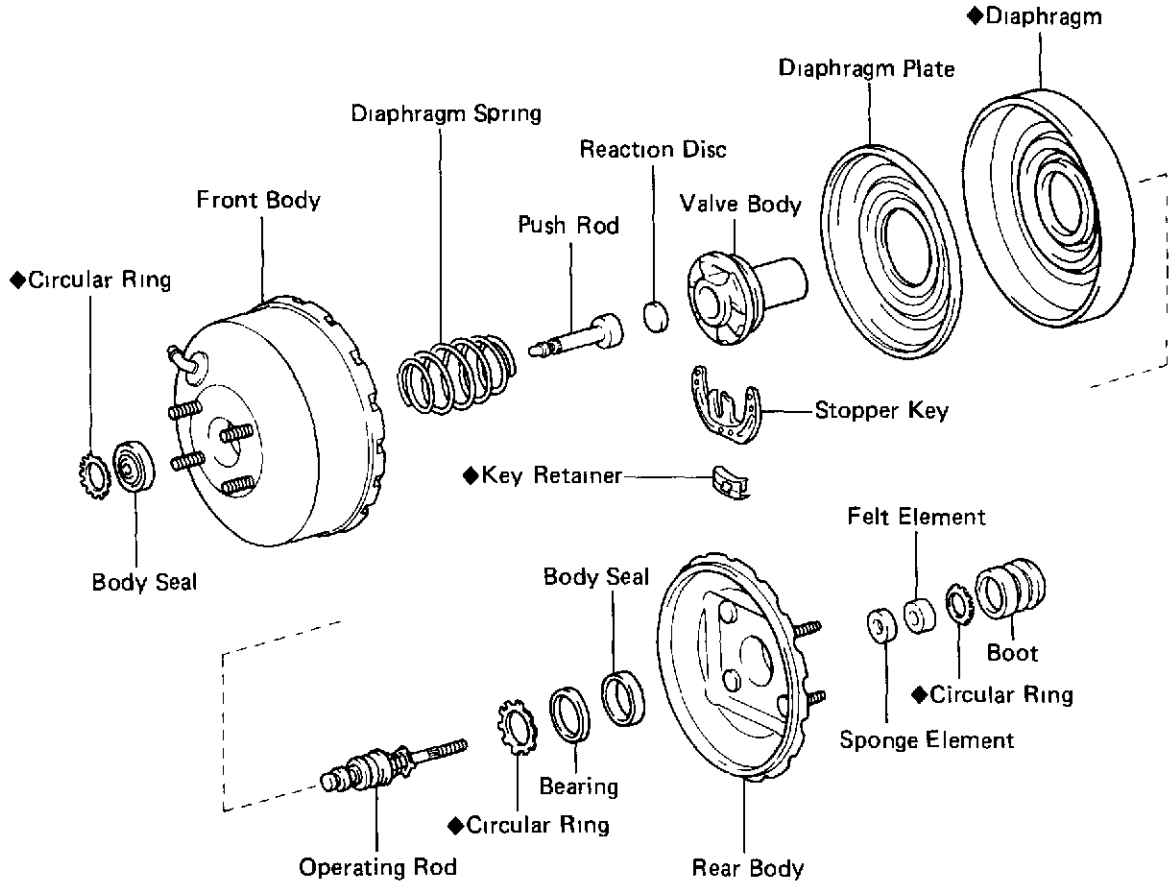

◆ Non-reusable part

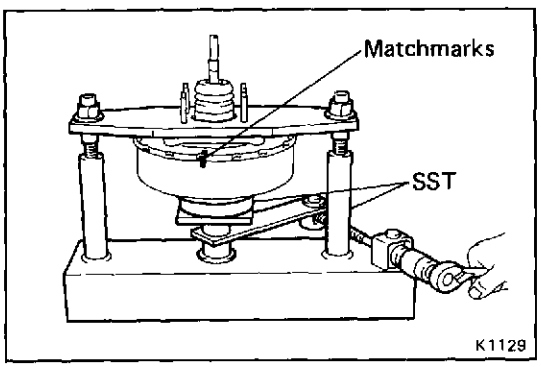

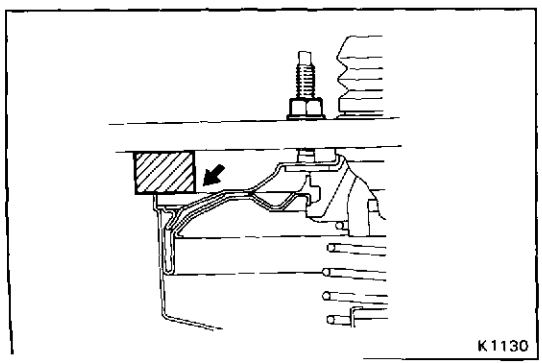

DISASSEMBLY OF BRAKE BOOSTER

1. SEPARATE FRONT AND REAR BODIES

(a) Put matchmarks on the front and rear bodies.

(b) Set the booster in SST

SST 09753-00013 and 09753-40010

NOTICE: Be careful not to tighten the two nuts of S too tight.

(c) Turn the front body clockwise until the front and bodies separate.

(d) Loosen the upper left and right nuts of SST, an sert pieces of wood between the front body an per plate.

NOTICE: Be careful that the pieces of wood do not tact the rear body.

(e) Evenly tighten down the four booster mounting to separate the front and rear bodies.

(f) Remove the diaphragm spring and push rod.

2. REMOVE BOOT FROM REAR BODY

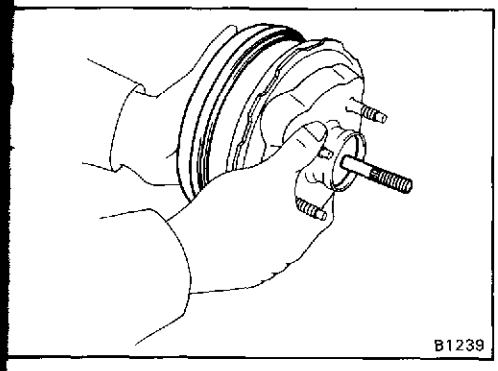

3. **REMOVE DIAPHRAGM ASSEMBLY FROM REAR BODY**

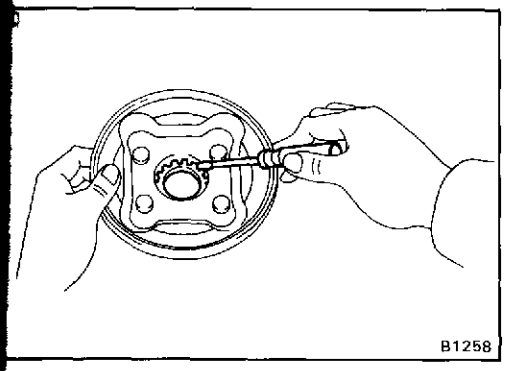

4. **REMOVE BEARING AND BODY SEAL FROM REAR BODY**

Using a screwdriver, pry out the circular ring , and remove the bearing and body seal.

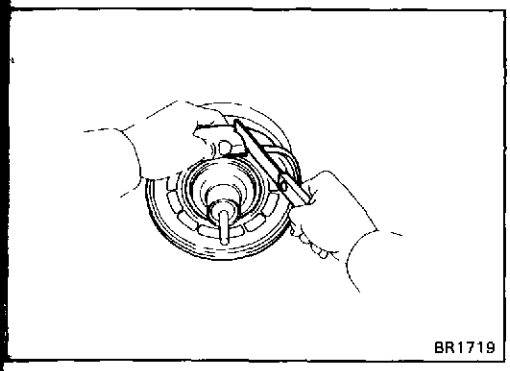

5. **REMOVE VALVE BODY AND DIAPHRAGM FROM DIAPHRAGM PLATE**

(a) Using a knife, cut off the diaphragm.

NOTICE: Be careful not to damage the valve body when cutting the diaphragm.

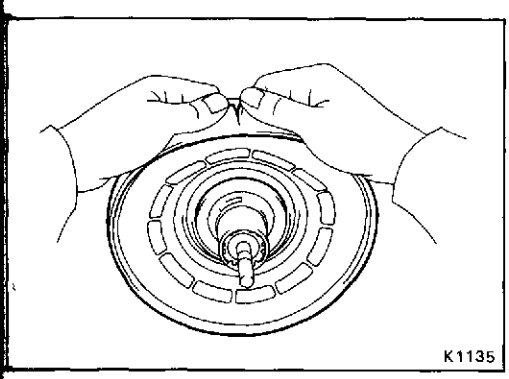

(b) Pull out diaphragm and remove the valve body.

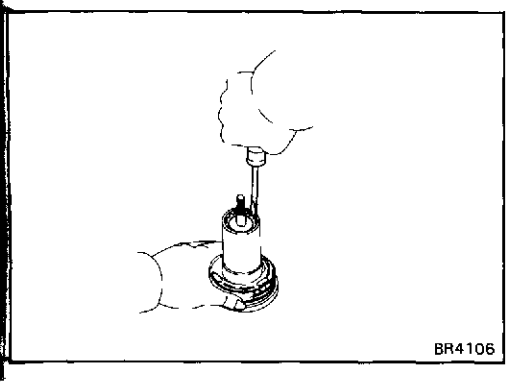

6. **REMOVE OPERATING ROD FROM VALVE BODY**

(a) Using a screwdriver, pry out the circular ring.

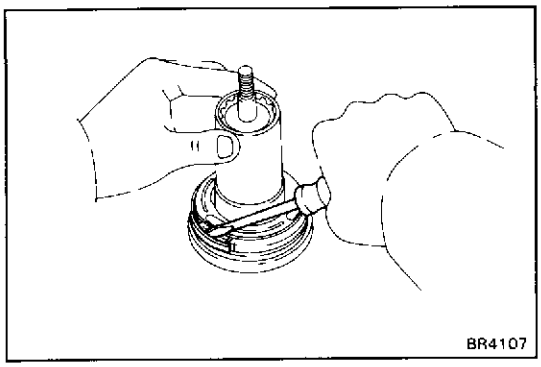

(b) Remove the key retainer

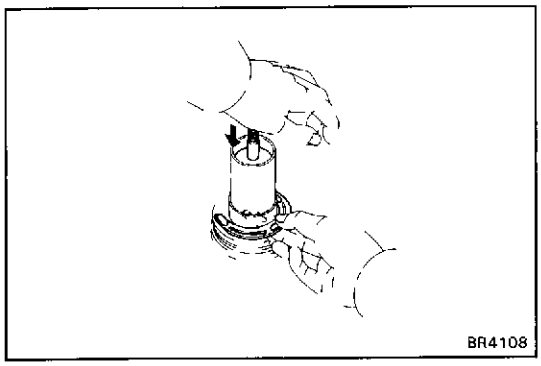

(c) While pushing in the operating rod, remove the stopper key.

(d) Pull out the operating rod with the two elements

7. REMOVE REACTION DISC FROM VALVE BODY

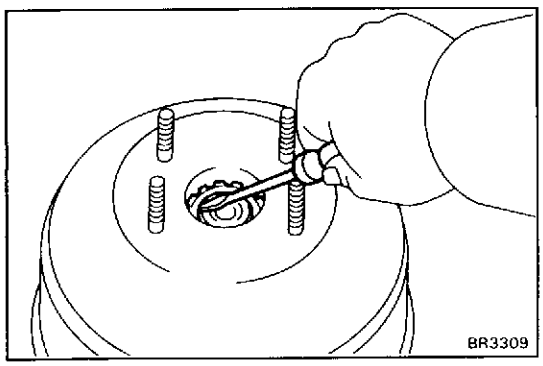

8. REMOVE BODY SEAL FROM FRONT BODY

Using a screwdriver, pry out the circular ring, and remove the body seal.

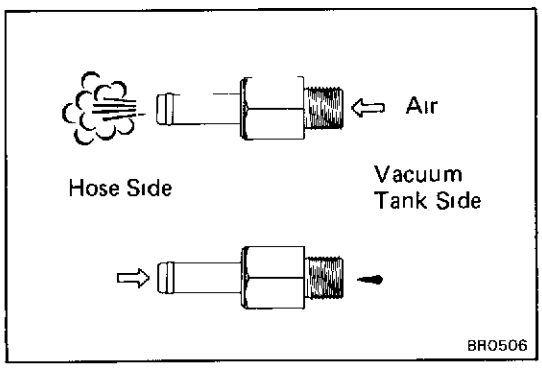

INSPECTION OF BRAKE BOOSTER COMPONENTS

INSPECT CHECK VALVE OPERATION

(a) Remove the check valve from the vacuum line

(b) Check that air flows from the vacuum tank side to the hose side.

(c) Check that air does not flow from the hose side to the vacuum tank side

If necessary, replace the check valve.

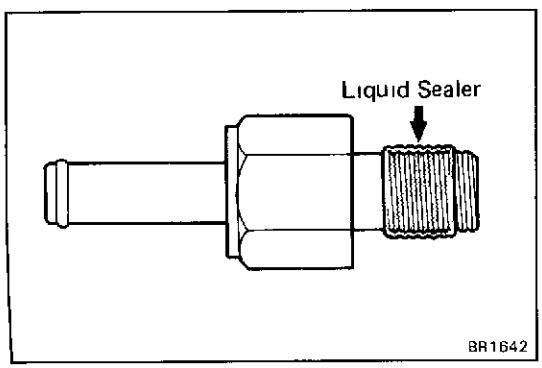

(d) Apply liquid sealer to the check valve as shown.

Sealant: Part No. 08826-00080 or equivalent

(e) Install the check valve.

Torque: 300 kg-cm (22 ft-lb, 29 N·m)

(f) Install the vacuum hose to the check valve with hose clamp

ASSEMBLY OF BRAKE BOOSTER

(See page BR-34)

1. APPLY SILICONE GREASE TO PARTS SHOWN BELOW

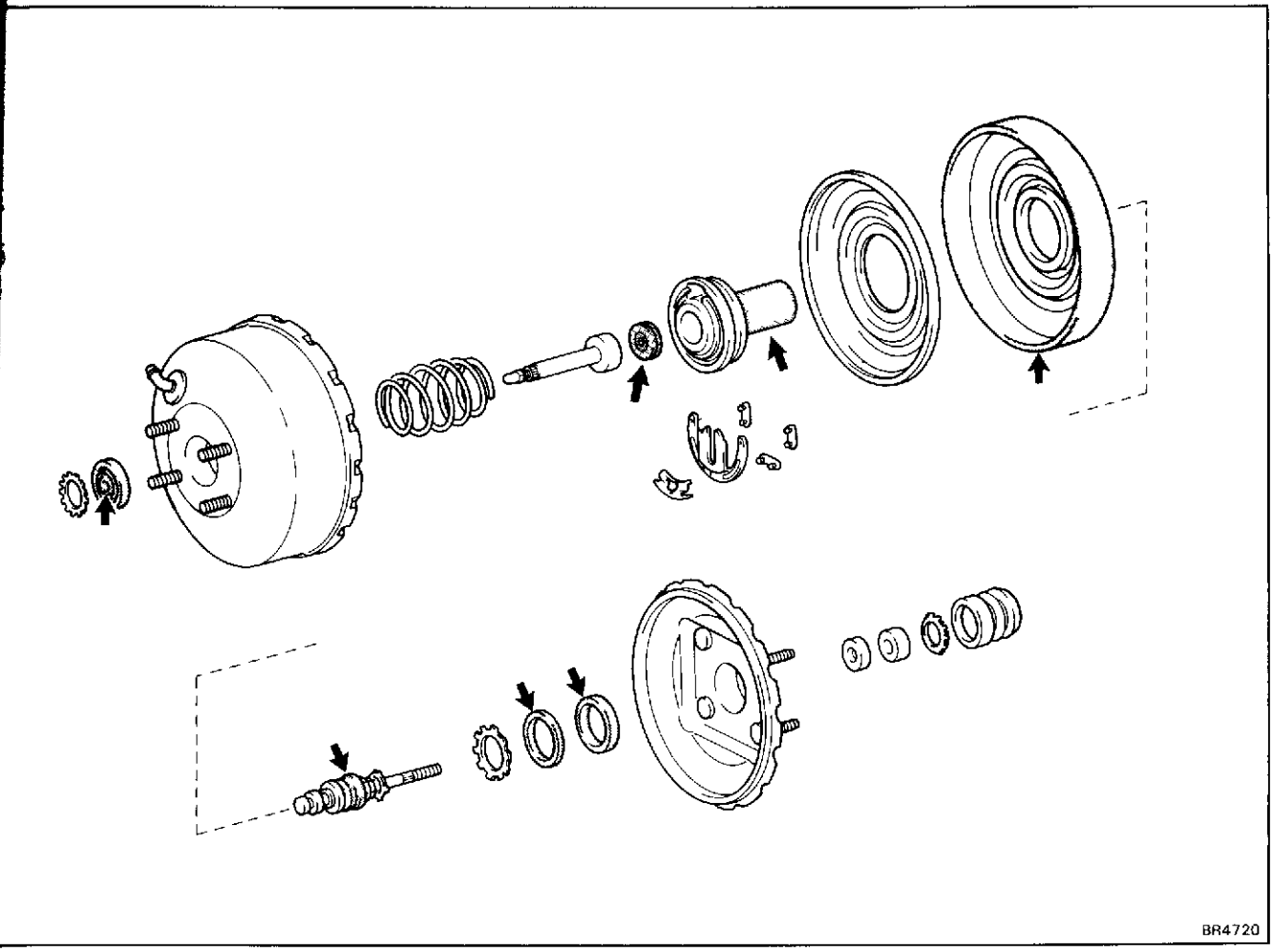

BR4720

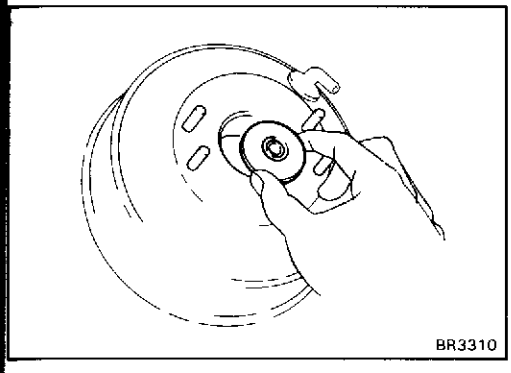

BR3310

2. INSTALL BODY SEAL AND RETAINER TO FRONT BODY

(a) Place the body seal in position.

(b) Secure the body seal with a new circular ring

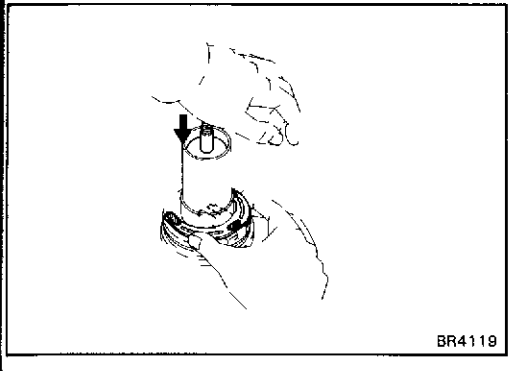

BR4119

3. INSTALL OPERATING ROD TO VALVE BODY

(a) Insert the operating rod into the valve body.

(b) Push the operating rod in the valve body and install the stopper key.

HINT: Install the stopper key as the stopper rubber on the key facing upward.

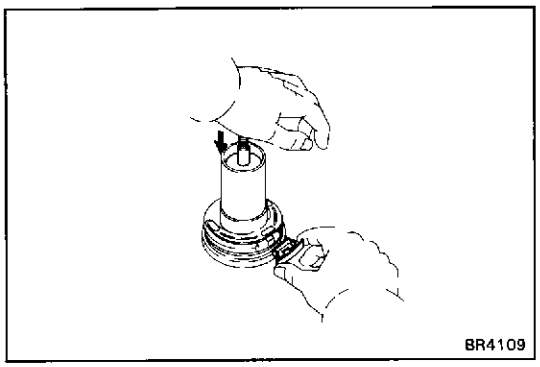
BR4109

(c) Install a new key retainer.

HINT: Align the retainer protrusion and valve body groove, insert the key retainer into the valve body until the clicking sound is heared.

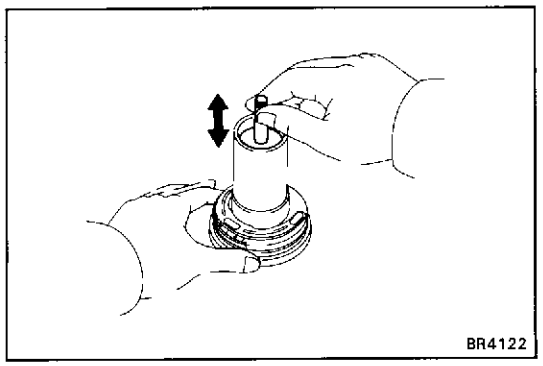
BR4122

(d) Pull the operating rod and confirm that the stopper key is working.

4. INSTALL REACTION DISC TO VALVE BODY

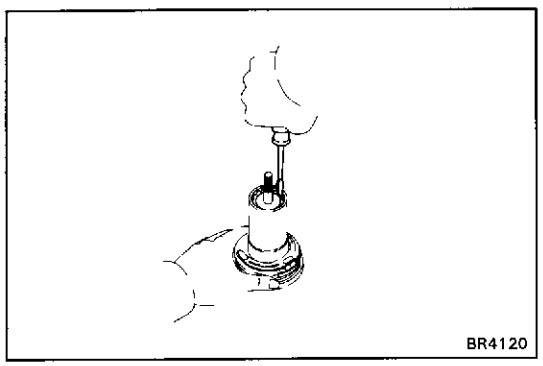
BR4120

5. INSTALL ELEMENTS

(a) Install the sponge element and felt element.

(b) Secure the elements with a new circular ring.

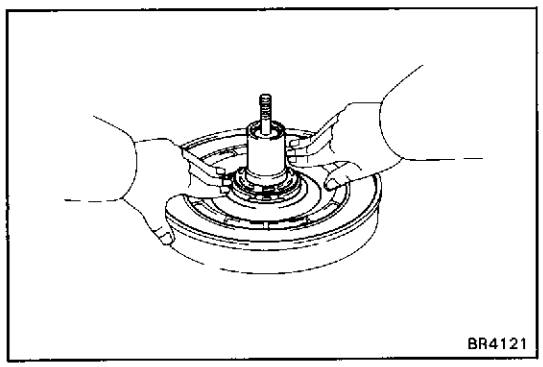
BR4121

6. INSTALL VALVE BODY AND DIAPHRAGM TO D APHRAGM PLATE

(a) Insert the valve body in the diaphragm plate

(b) Install the diaphragm between the diaphragm pla and valve body

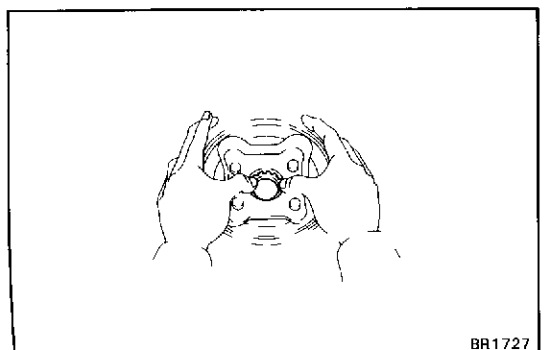
BR1727

7. INSTALL BODY SEAL AND BEARING TO REAR BOD

(a) Place the body seal and bearing in position.

(b) Secure the bearing with a new circular ring.

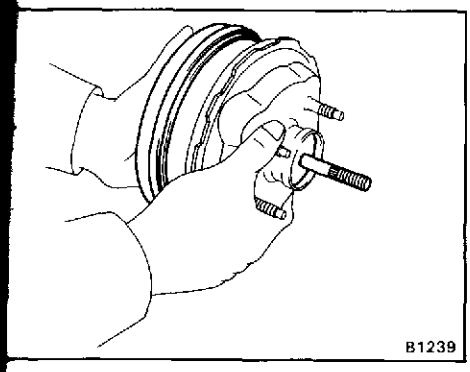
B1239

8. INSTALL DIAPHRAGM ASSEMBLY TO REAR BODY

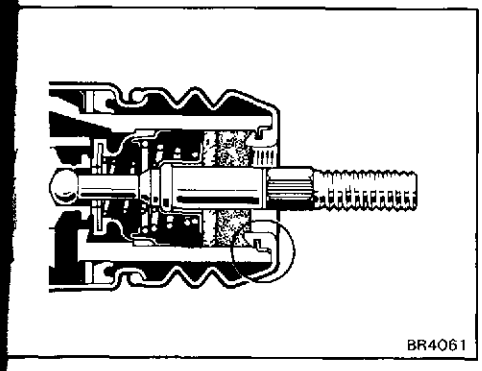
BR4061

9. INSTALL BOOT TO REAR BODY

(a) Install the boot to the assembly.

(b) Check that the circular ring fit into the groove of the boot as shown in the illustration.

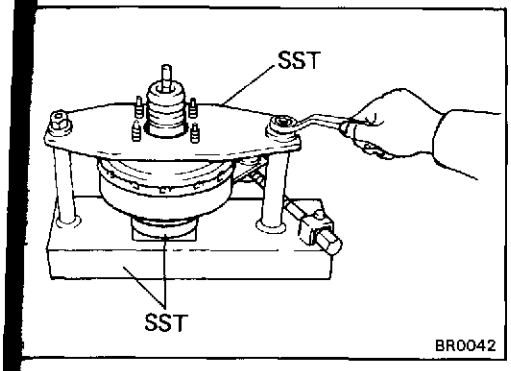

BR0042

10. ASSEMBLE FRONT AND REAR BODIES

(a) Place the spring and push rod in the front body.

(b) Using SST, compress the spring between the front and rear bodies.

SST 09753-00013 and 09753-40010

NOTICE: Be careful not to tighten the two nuts of SST too tight.

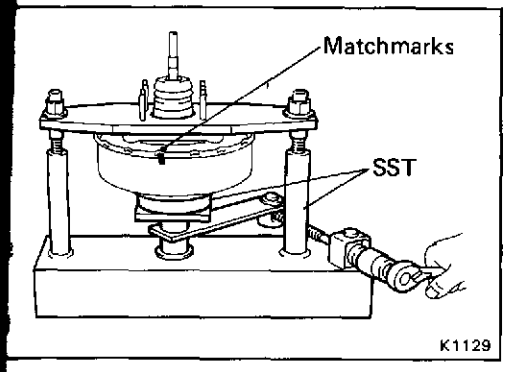

K1129

(c) Assemble the front and rear bodies by turning the front body counterclockwise until the matchmarks match

HINT: If the front body is too tight to be turned, apply more silicone grease on the diaphragm edge that contacts the front and rear bodies.

JKC Type Tandem Booster

COMPONENTS

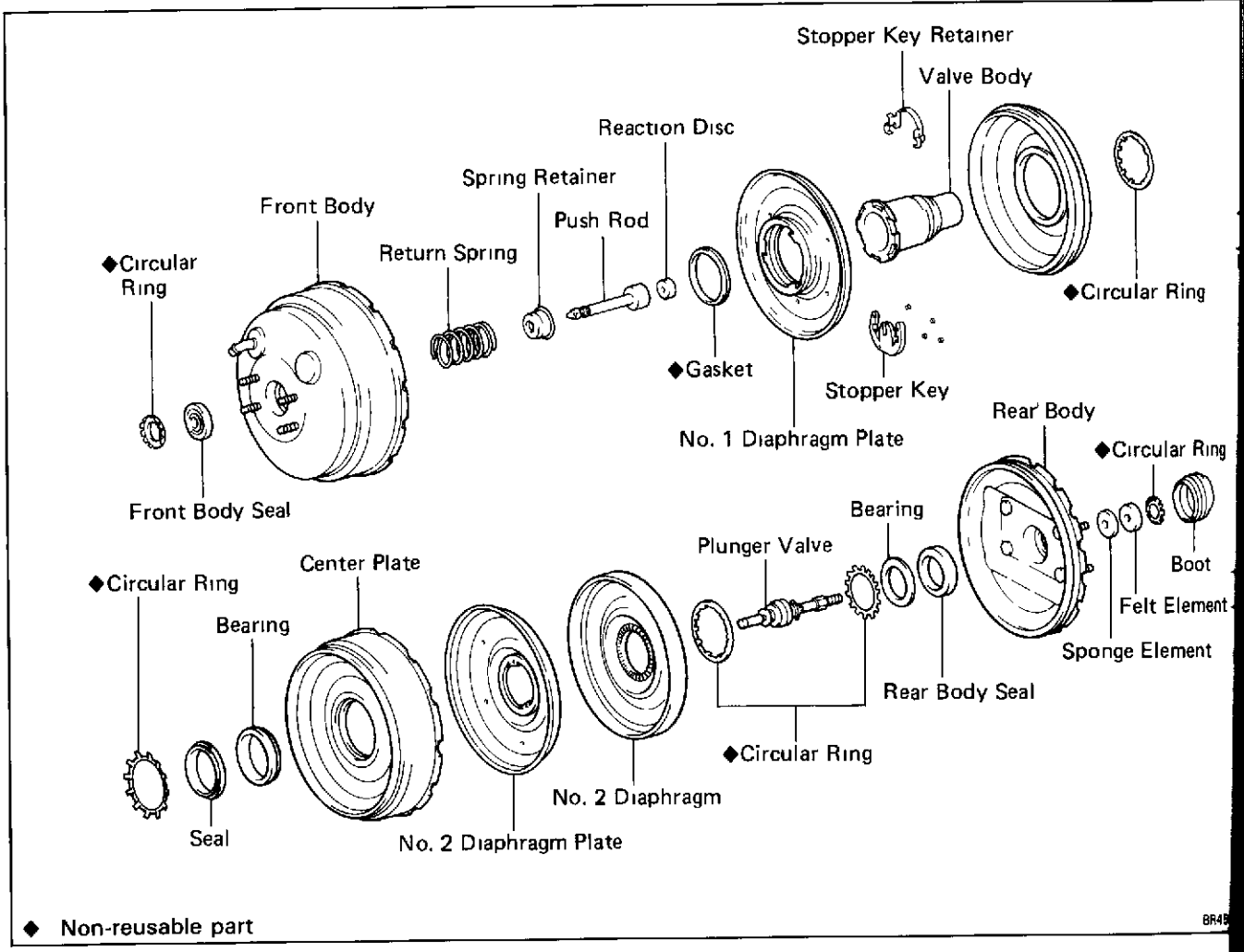

◆ Non-reusable part

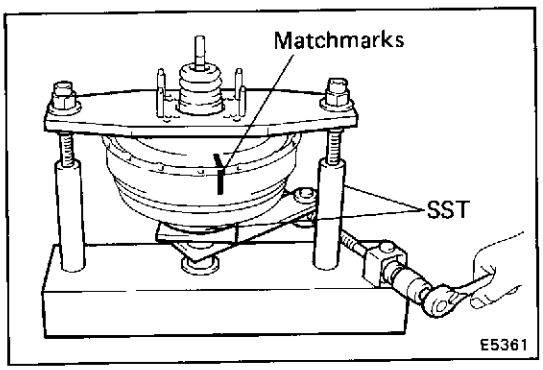

DISASSEMBLY OF BRAKE BOOSTER

1. SEPARATE FRONT AND REAR BODIES

(a) Set the booster in SST.

SST 09753-00013 and 09753-40010

(b) Put matchmarks on the front and rear bodies.

NOTICE: Be careful not to tighten the two nuts of SST too tight.

(c) Turn the front body clockwise to separate the fr and rear bodies.

(d) Remove the rear body, push rod, spring retainer piston return spring from the front body.

2. REMOVE BOOT FROM REAR BODY

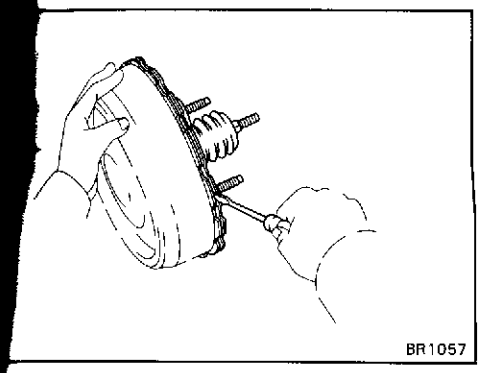

3. REMOVE REAR BODY FROM CENTER PLATE ASSEMBLY

Using a screwdriver, separate and remove the rear body from center plate assembly.

HINT. Tape the screwdriver tip before use.

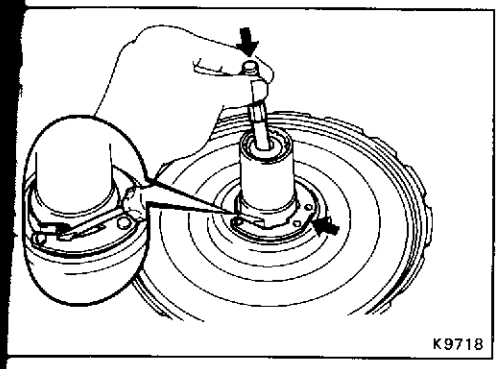

4. REMOVE PLUNGER VALVE

(a) Using a screwdriver, crush the protrusion of the stopper key retainer as shown in the illustration.

(b) While pushing in the plunger valve, remove the stopper key.

(c) Remove the stopper key retainer.

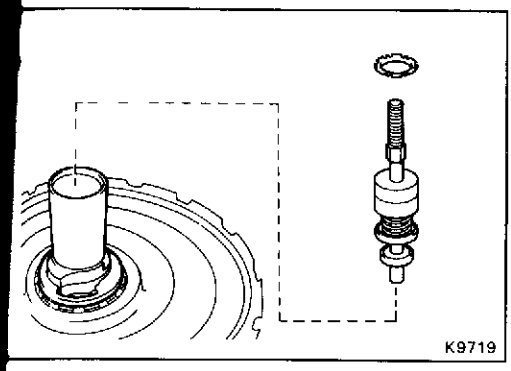

(d) Using a screwdriver, pry out the circular ring

(e) Remove the plunger valve with the sponge and felt elements from the valve body.

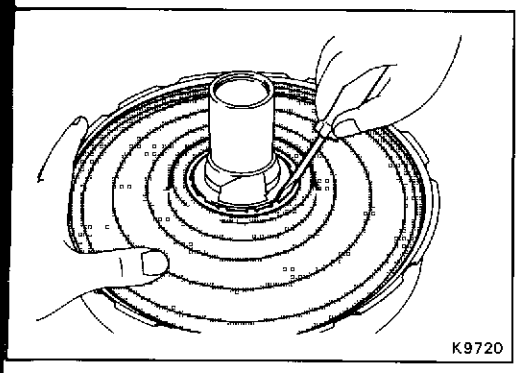

5. REMOVE NO.2 DIAPHRAGM

(a) Using a screwdriver, pry out the circular ring.

(b) Remove the No.2 diaphragm.

(c) Remove the No 2 diaphragm plate.

6. REMOVE CENTER PLATE FROM ASSEMBLY

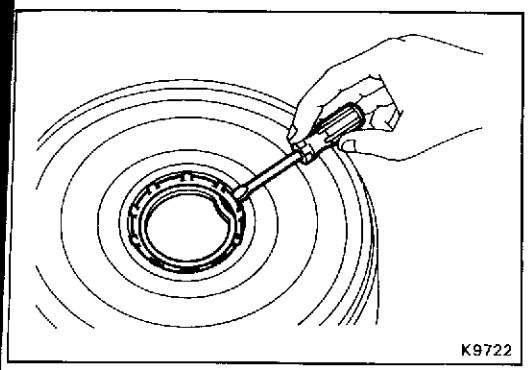

7. REMOVE SEAL AND BEARING FROM CENTER PLATE

(a) Using a screwdriver, pry out the circular ring from the center plate.

(b) Remove the seal and bearing.

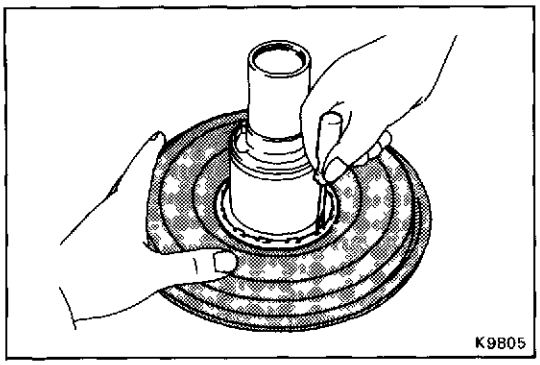

8. REMOVE NO.1 DIAPHRAGM

(a) Using a screwdriver, pry out the circular ring.

(b) Remove the No.1 diaphragm.

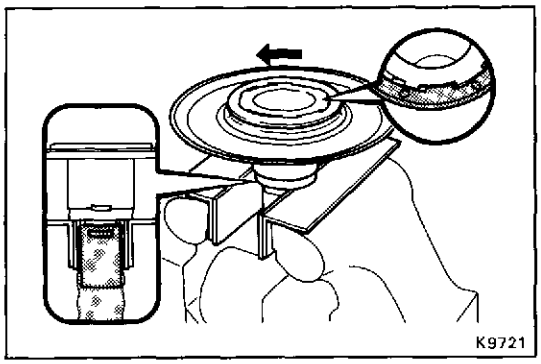

9. REMOVE NO.1 DIAPHRAGM PLATE

(a) Wind a cloth or an equivalent to the valve body, and using soft jaws, clamp the diaphragm plate assembly in the vise.

NOTICE: Do not tighten the vise too tight.

(b) Using a screwdriver, lift up the protrusion of the No. diaphragm plate and turn the plate one third of on turn counterclockwise.

(c) Remove the No.1 diaphragm plate and O-ring.

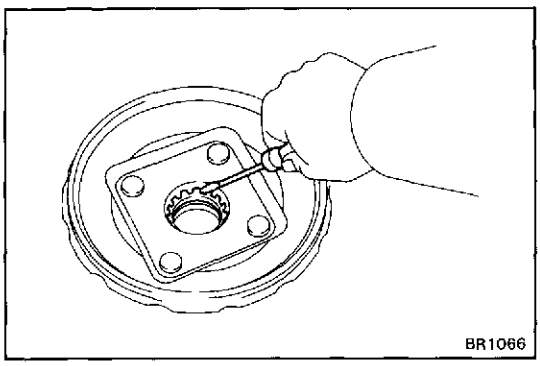

10. REMOVE BODY SEAL AND BEARING FROM REAR BOD

(a) Using a screwdriver, pry out the circular ring from th rear body.

(b) Remove the body seal and bearing.

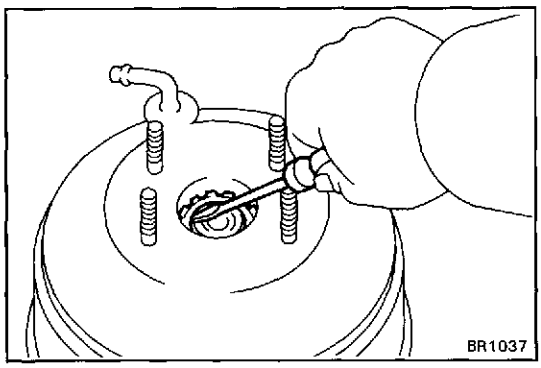

11. REMOVE BODY SEAL FROM FRONT BODY

(a) Using a screwdriver, pry out the circular ring.

(b) Remove the body seal.

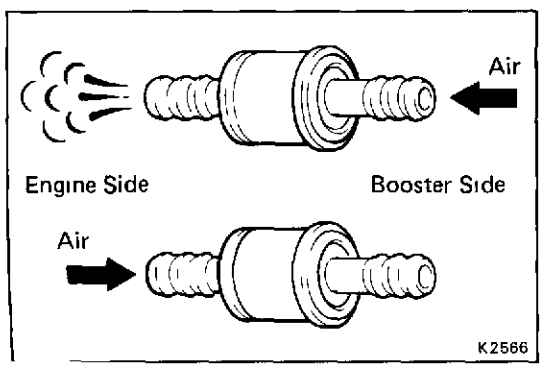

INSPECTION OF BRAKE BOOSTER COMPONEN

INSPECT CHECK VALVE OPERATION

(a) Remove the check valve.

(b) Check that air flows from the booster side to th gine side.

(c) Check that air does not flow from the engine si the booster side.

If necessary, replace the check valve.

(d) Install the check valve in place.

ASSEMBLY OF BRAKE BOOSTER

(See page BR-40)

1. APPLY SILICONE GREASE TO PARTS SHOWN BELOW

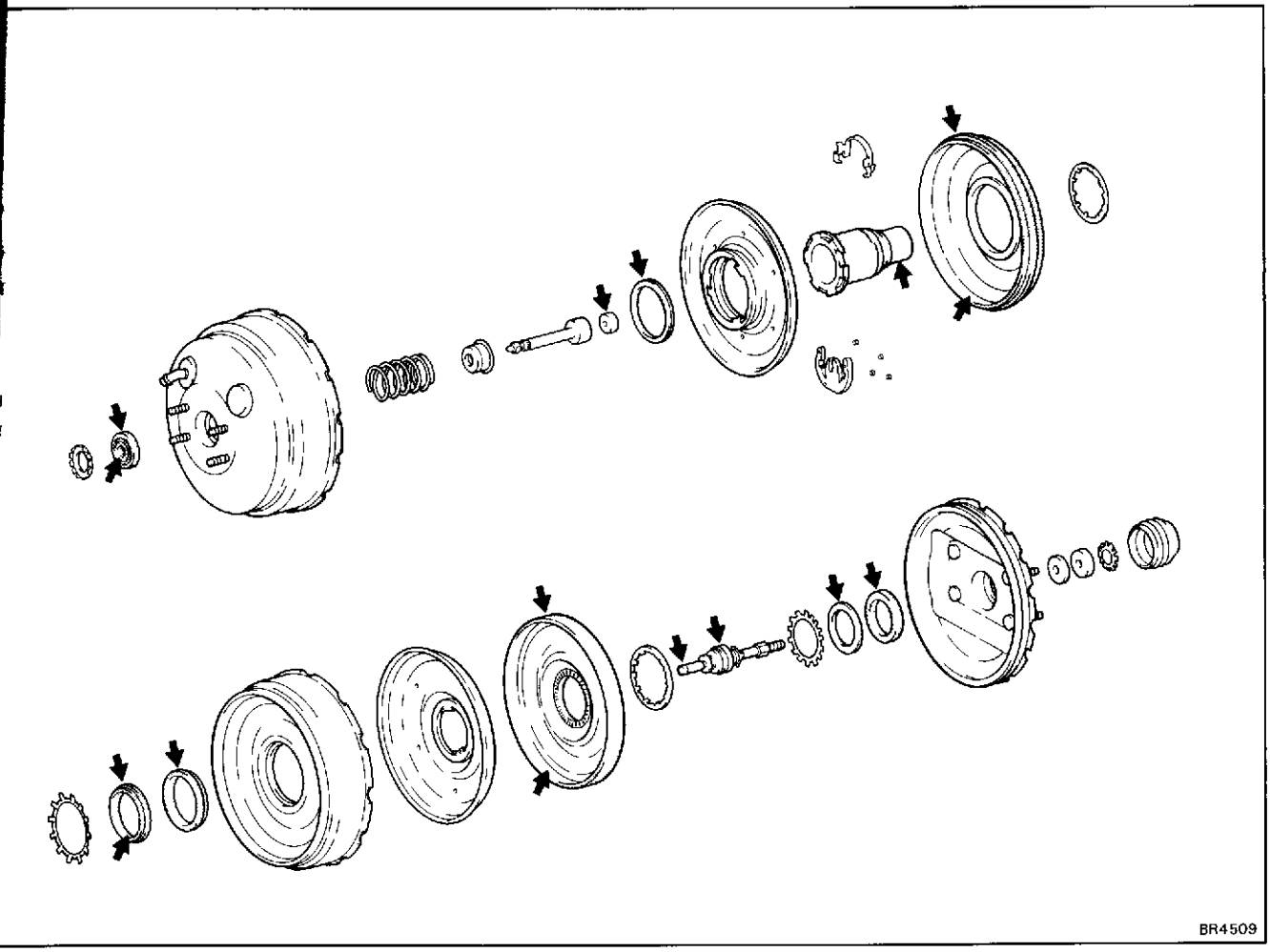

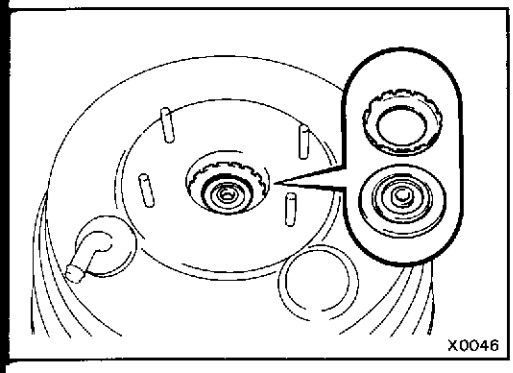

2. INSTALL BODY SEAL TO FRONT BODY
   (a) Apply silicone grease to the body seal and install it to the front body.
   (b) Secure the body seal with a new circular ring.

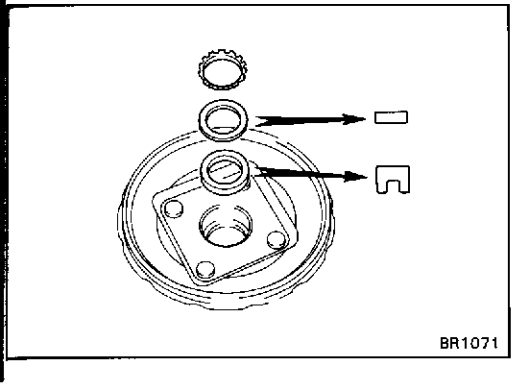

3. INSTALL BODY SEAL TO REAR BODY
   (a) Apply silicone grease to the body seal and install it to the rear body.
   (b) Install the bearing and secure the body seal and bearing with a new circular ring.

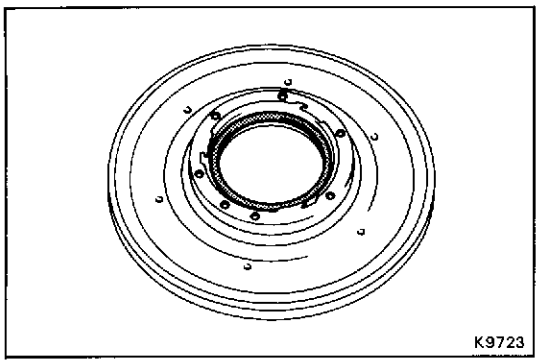

4. INSTALL No.1 DIAPHRAGM PLATE TO VALVE BODY

(a) Install a new O-ring to the NO.1 diaphragm plate.

(b) Set the No.1 diaphragm plate on the valve body.

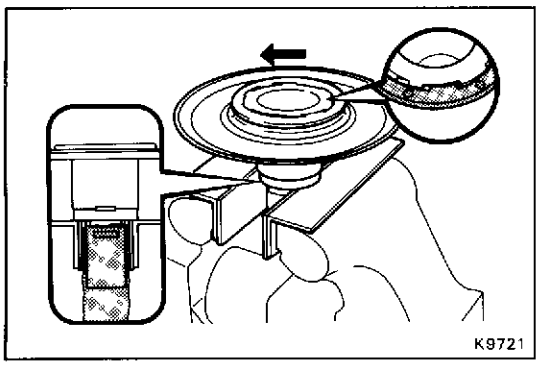

(c) Wind a cloth or an equivalent to the valve body, and using soft jaws, clamp the diaphragm plate assembly in the vise.

NOTICE: Do not tighten the vise too tight.

(d) Align the protrusion of the No.1 diaphragm plate and cut portion of the valve body, then turn the plate one third of one turn counterclockwise.

(e) Stake the protrusion of the No 1 diaphragm plate

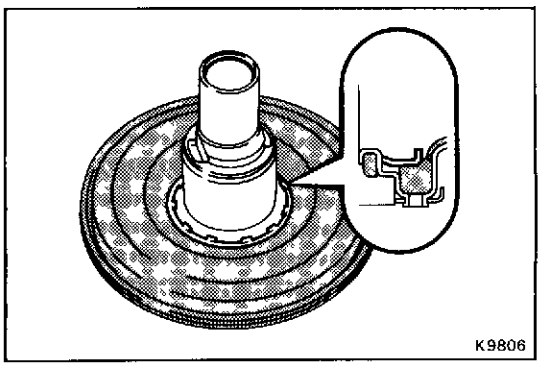

5. INSTALL NO.1 DIAPHRAGM

(a) Install the No.1 diaphragm onto the No.1 diaphragm plate.

(b) Secure the diaphragm with the new circular ring

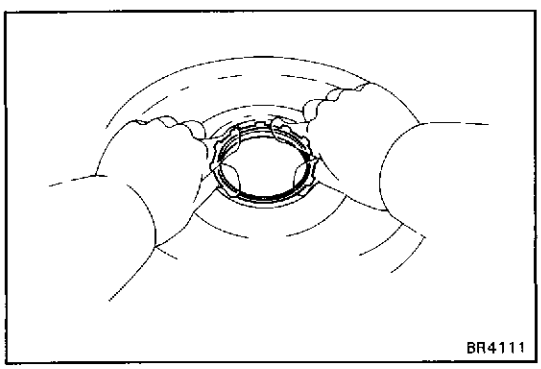

6. ASSEMBLE CENTER PLATE ASSEMBLY

(a) Install the bearing and a new circular ring to the se

(b) Install the seal assembly to the center plate.

(c) Apply silicone grease on the circular ring with t thickness about 2.0 mm (0.79 in.).

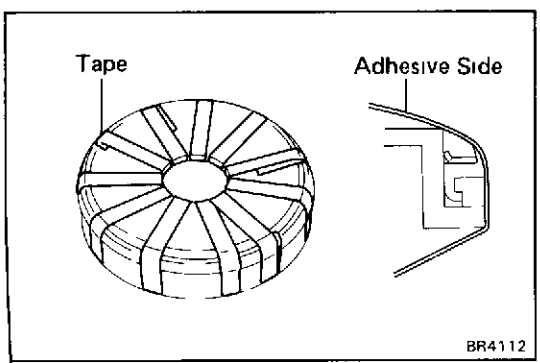

(d) Wind the thin tape to the center plate as shown in illustration so as not to the seal lip fold under w inserting the valve body.

HINT: Wind the tape so the adhesive side faces outside.

(e) Apply silicon grease to the tape and valve body tact portions.

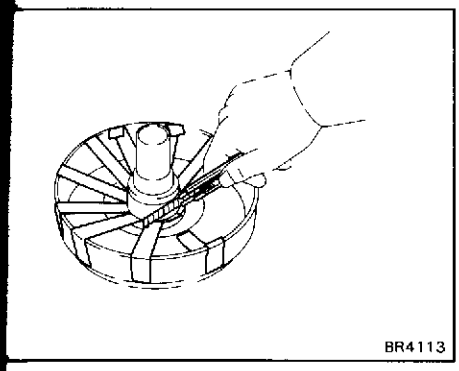
BR4113

(f) Install the center plate to the valve body.

NOTICE: Be careful not to the seal lip fold under.

(g) Cut off the tapes and pull out them.

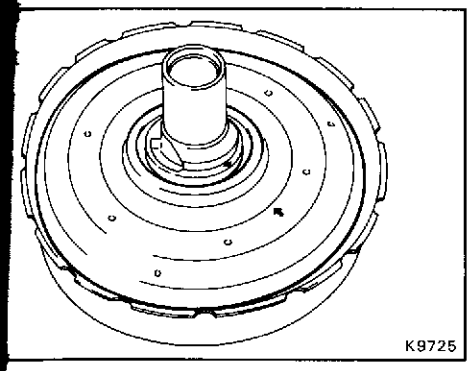
K9725

7. INSTALL NO.2 DIAPHRAGM PLATE

Align the arrows on the valve body and No.2 diaphragm plate, then install the diaphregm plate to the valve body.

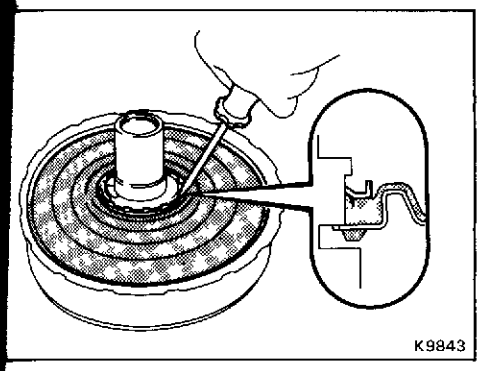
K9843

8. INSTALL NO.2 DIAPHRAGM

(a) Install the No.2 diaphragm onto the No.2 diaphragm plate.

(b) Secure the diaphragm with a new circular ring.

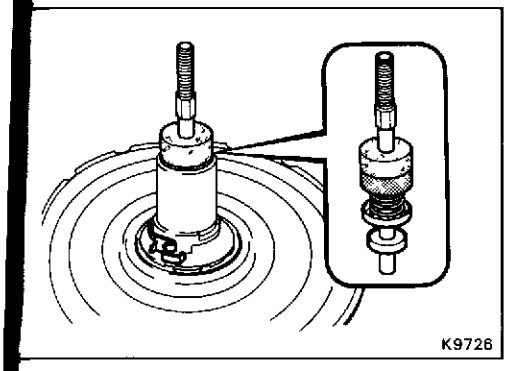
K9726

9. INSTALL PLUNGER VALVE

(a) Install the sponge and felt elements to the plunger valve.

(b) Install the plunger valve to the valve body.

(c) Install the stopper key retainer to the valve body.

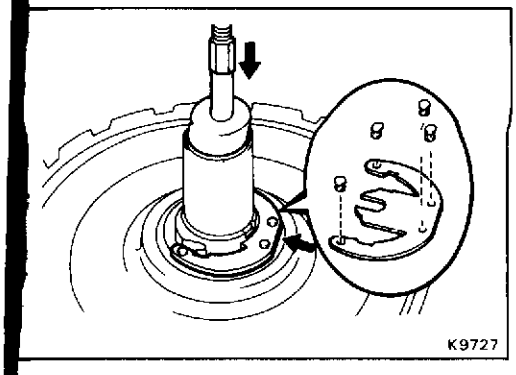
K9727

(d) While pushing in the plunger valve, install the stopper key.

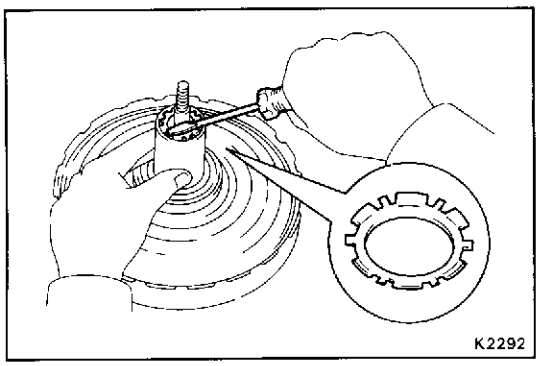

(e) Secure the plunger valve with a new circular ring.

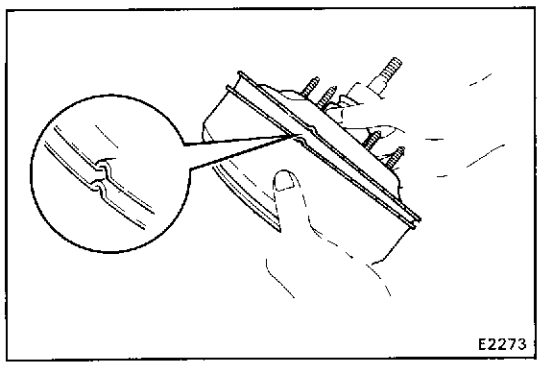

10. INSTALL REAR BODY TO CENTER PLATE ASSEMBLY

Align the each protrusions of the center plate and rear body, install the rear body to the center plate assembly.

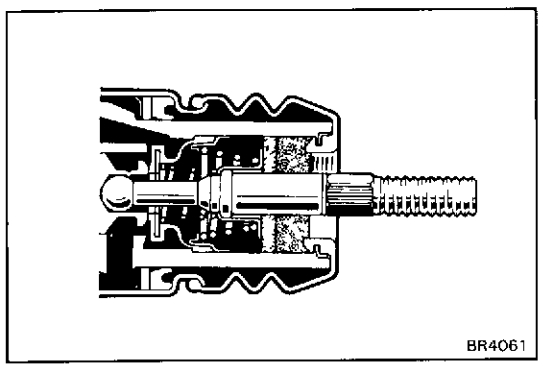

11. INSTALL BOOT

(a) Install the boot to the assembly.

(b) Check that the circular ring fit into the groove of the boot as shown in the illustration.

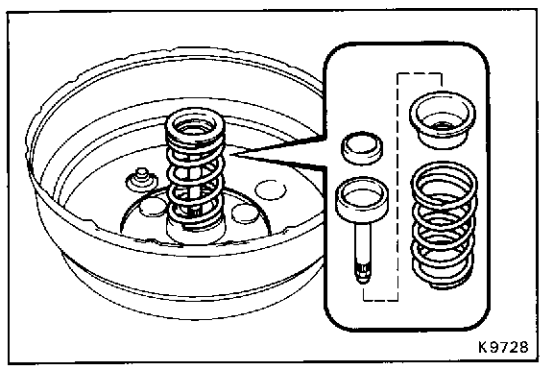

12. ASSEMBLE FRONT AND REAR BODIES

(a) Place the front body on SST.

SST 09753-00013 and 09753-40010

(b) Install the following parts to the front body.

- Return spring
- Spring retainer
- Push rod
- Reaction disc

HINT: Before installing the reaction disc, apply silicone grease to the reaction disc.

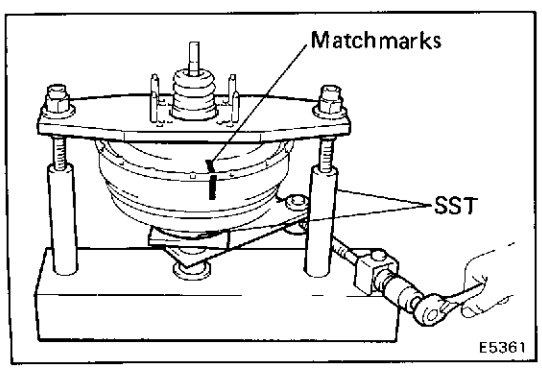

(c) Place the rear body assembly into the front body.

(d) Using SST, compress the spring between the front and rear bodies.

SST 09753-00013 and 09753-40010

NOTICE: Be careful not to tighten the two nuts of SST too tight.

(e) Assemble the front and rear bodies by turning the front body counterclockwise until the matchmarks ma

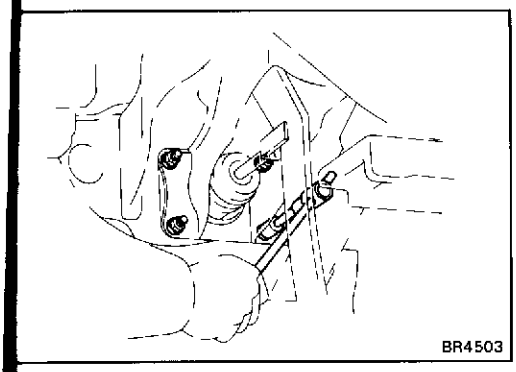
BR4503

INSTALLATION OF BRAKE BOOSTER

(See page BR-17)

1. **INSTALL BRAKE BOOSTER AND CLEVIS**

   Install the brake booster, and torque the four nuts

   Torque: 130 kg-cm (9 ft-lb, 13 N·m)

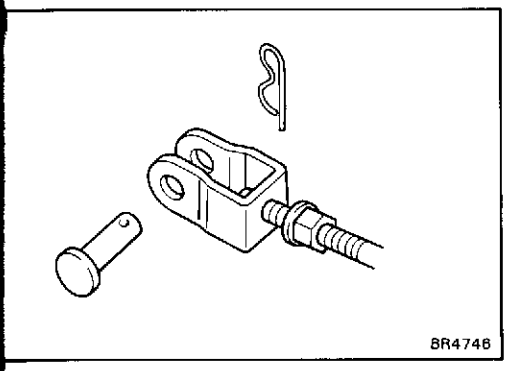
BR4746

2. **CONNECT CLEVIS TO BRAKE PEDAL**

   Insert the clevis pin into the clevis and brake pedal and install the clip to the clevis pin.

3. **INSTALL PEDAL RETURN SPRING**

4. **CONNECT VACUUM HOSE TO BRAKE BOOSTER**

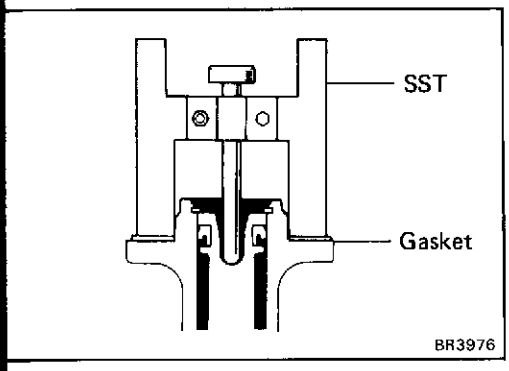

BR3976

5. **ADJUST LENGTH OF BOOSTER PUSH ROD**

   (a) Install the gasket on the master cylinder.

   (b) Set the SST on the gasket, and lower the pin until its tip slightly touches the piston.

   SST 09737-00010

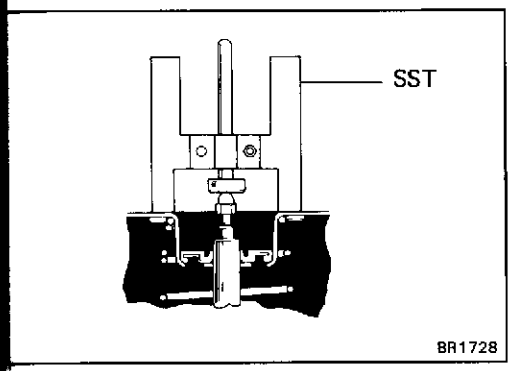

BR1728

   (c) Turn SST upside down, and position it on the booster.

   SST 09737-00010

   (d) Measure for clearance between the booster push rod and pin head (SST).

   Clearance: 0 mm (0 in.)

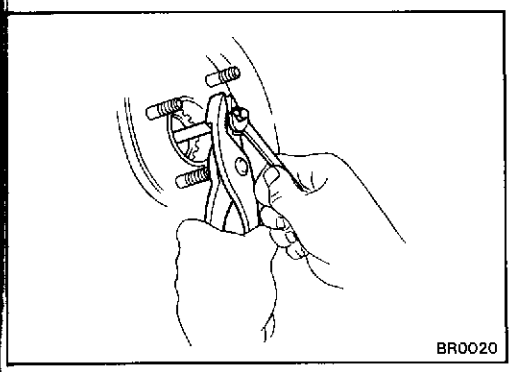
BR0020

   (e) Adjust the booster push rod length until the push rod lightly touches the pin head.

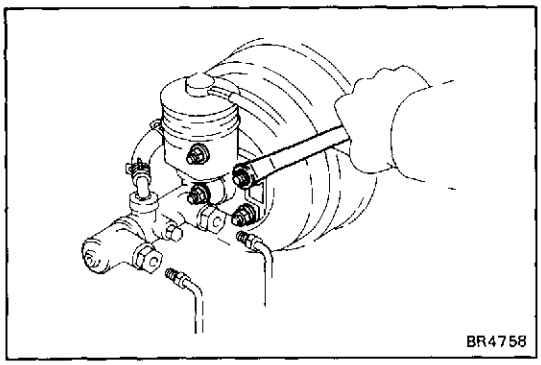

6. INSTALL MASTER CYLINDER
(See page BR-10)

7. FILL BRAKE RESERVOIR WITH BRAKE FLUID AND BLEED BRAKE SYSTEM
(See page BR-7)

8. CHECK FLUID LEAKAGE

9. CHECK AND ADJUST BRAKE PEDAL
(See page BR-6)

10. PERFORM OPERATIONAL CHECK
(See page BR-7)

Disc Brake

COMPONENTS

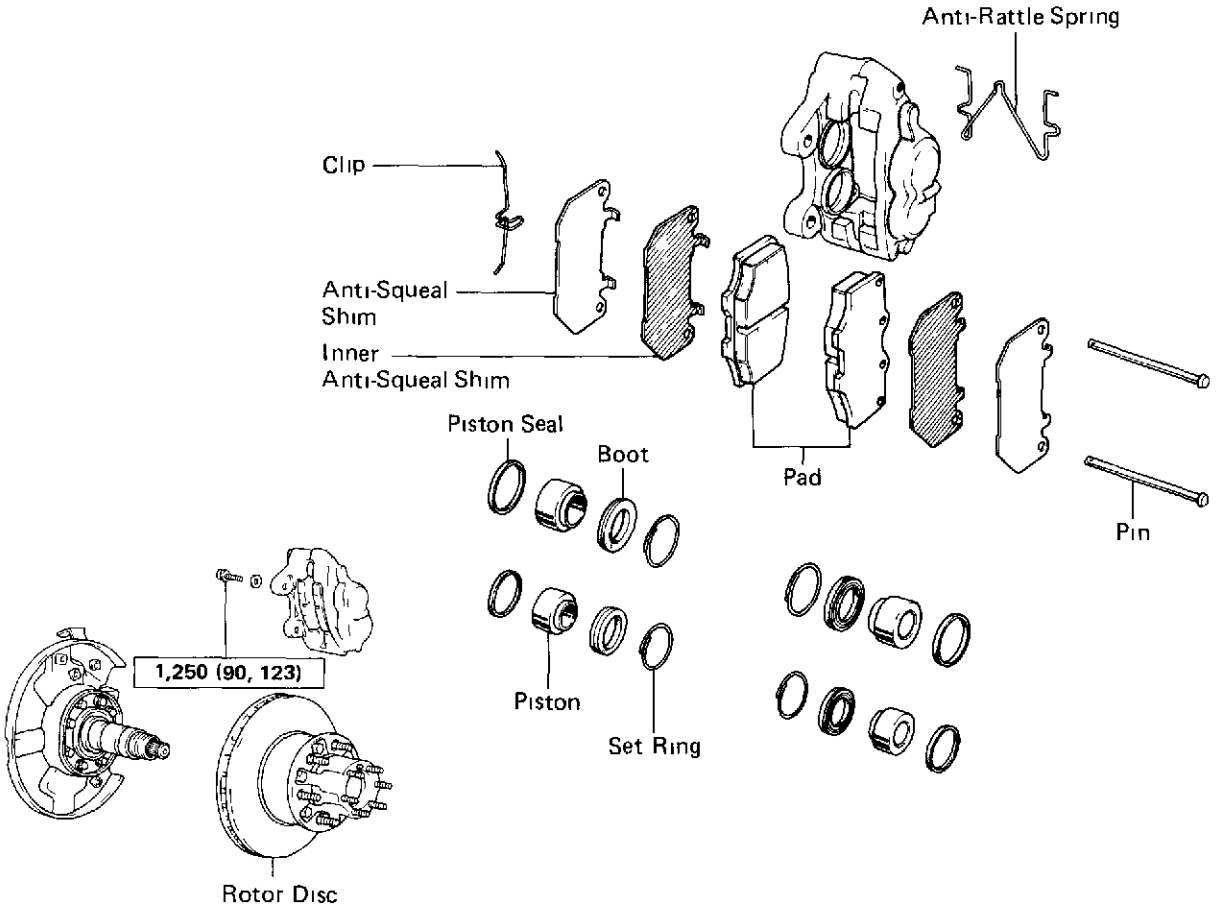

kg-cm (ft-lb, N·m) . Specified torque

♦ Non-reusable part

BR4801 BR0266

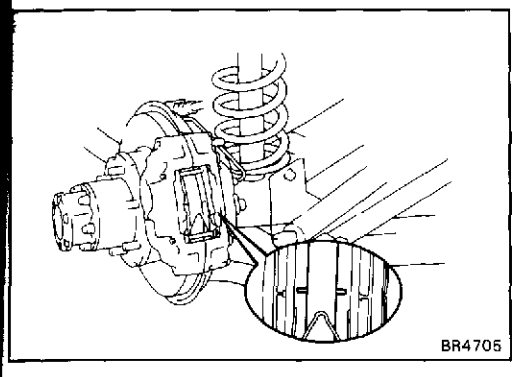

BR4705

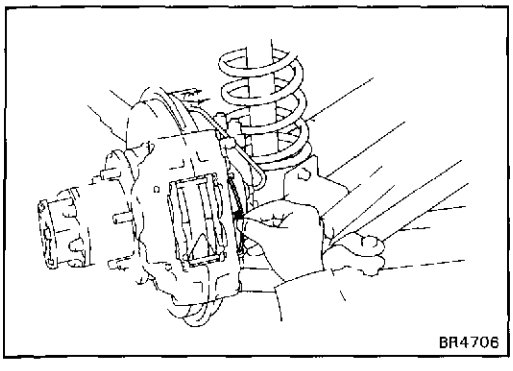

BR4706

REPLACEMENT OF BRAKE PADS

1. REMOVE FRONT WHEEL

2. INSPECT PAD LINING THICKNESS

Check the pad thickness through the cylinder inspection hole and replace pads if not within specification.

Minimum thickness

Except Australia:	**1.0 mm (0.039 in.)**
Australia:	**4.0 mm (0.157 in.)**

3. REMOVE FOLLOWING PARTS

(a) Anti-rattle clip

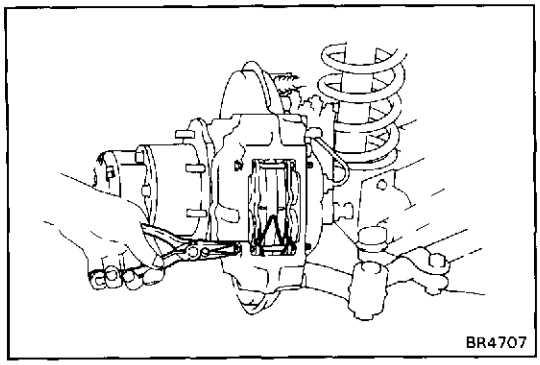
BR4707

(b) Two pins

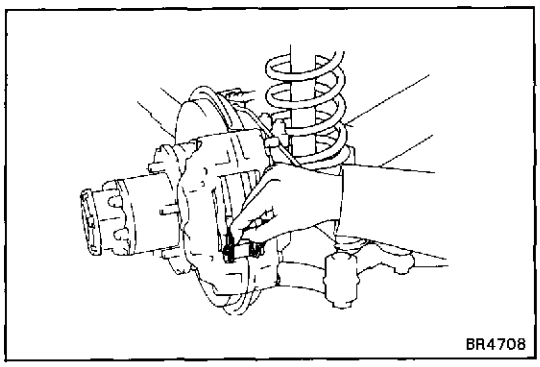
BR4708

(c) Anti-rattle spring

(d) Two pads

(e) Four anti-squeal shims

4. **CHECK ROTOR DISC THICKNESS**
(See page BR-73)

5. **CHECK ROTOR DISC RUNOUT**
(See page BR-73)

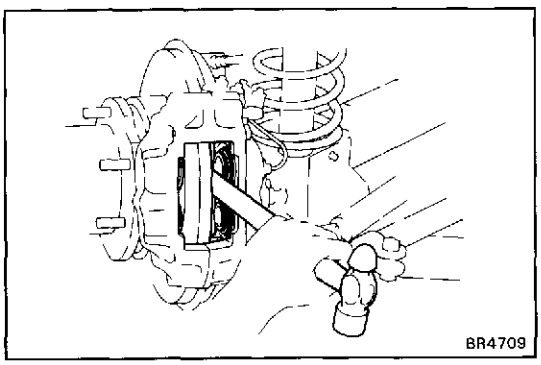
BR4709

6. **INSTALL NEW PADS**

(a) Draw out a small amount of brake fluid from the reservoir.

(b) Press in the piston with a hammer handle or an equivalent.

HINT: Always change the pad on one wheel at a time as there is possibility of the opposite piston flying out

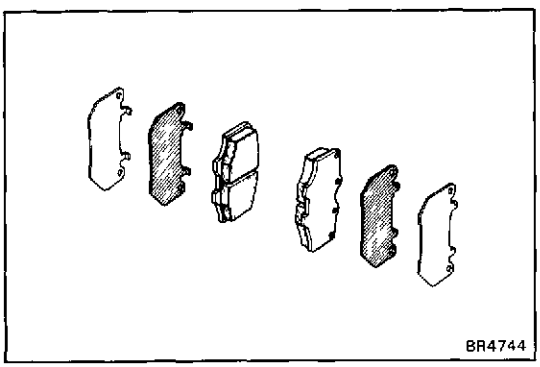
BR4744

(c) Install the four anti-squeal shims to new pads as shown.

(d) Install the new pads into the cylinder.

NOTICE: Do not allow oil or grease to get on the rubbing face.

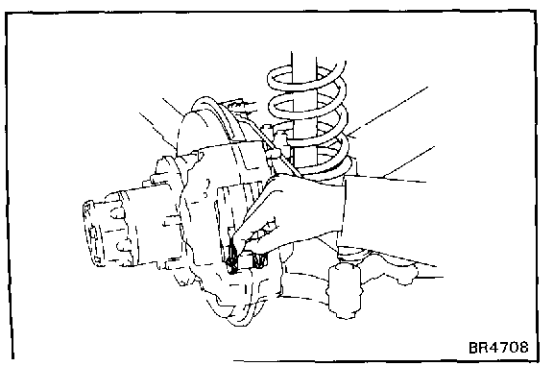
BR4708

7. **INSTALL ANTI-RATTLE SPRING**

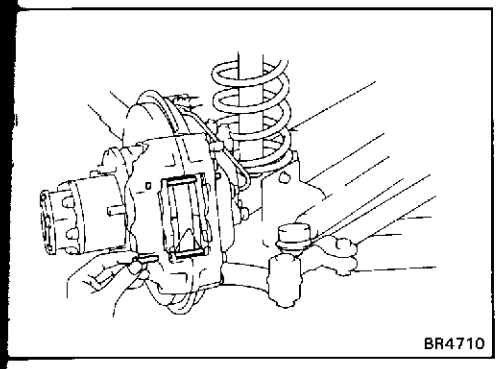

8. INSTALL TWO PINS

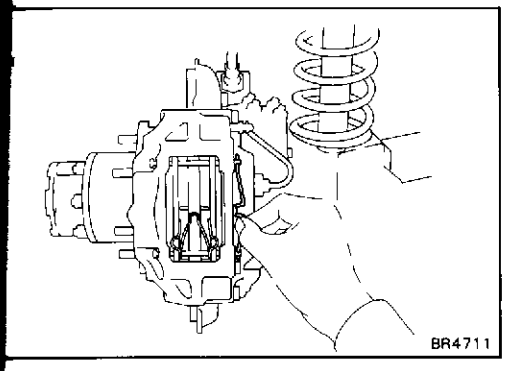

9. INSTALL ANTI-RATTLE CLIP

REMOVAL OF CYLINDER

(See page BR-69)

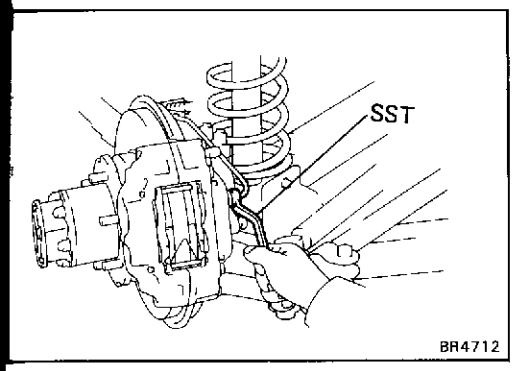

1. REMOVE FRONT WHEEL

2. DISCONNECT BRAKE TUBE

Using SST, disconnect the brake tube

Use a container to catch the brake fluid.

SST 09751-36011

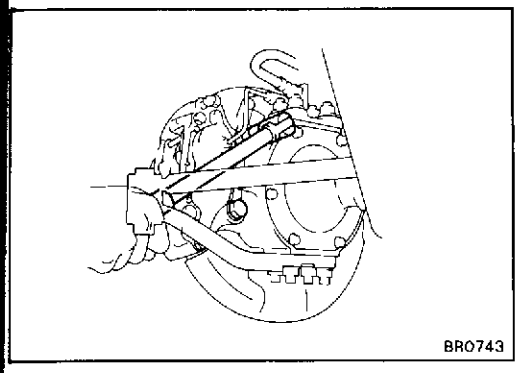

3. REMOVE CYLINDER

Remove the two mounting bolts and cylinder.

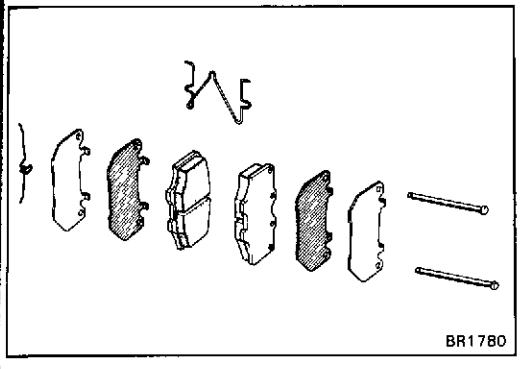

4. REMOVE FOLLOWING PARTS

(a) Anti-rattle clip

(b) Two pins

(c) Anti-rattle spring

(d) Two pads

(e) Four anti-squeal shims

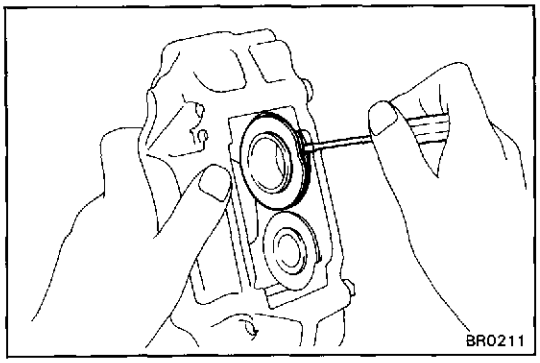

DISASSEMBLY OF CYLINDER

1. REMOVE CYLINDER BOOT SET RINGS AND BOOTS

Using a screwdriver, remove the cylinder boot set rings and boots

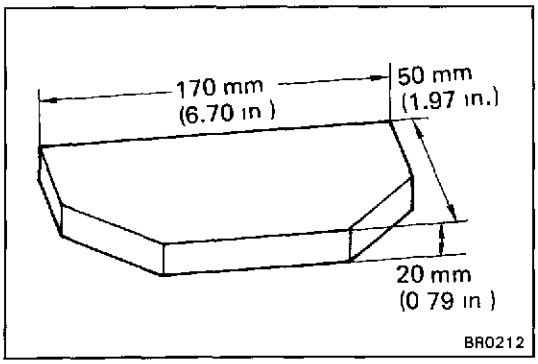

2. REMOVE PISTON FROM CYLINDER

(a) Prepare the wooden plate as shown in the illustratio to hold the piston.

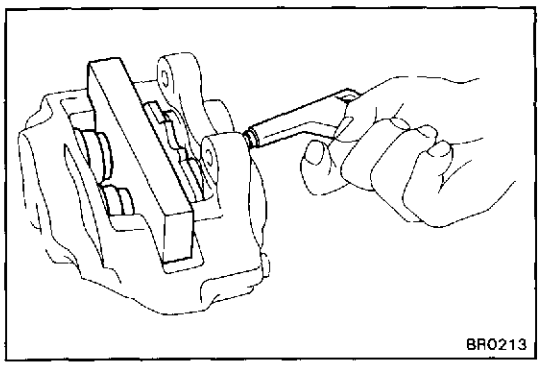

(b) Place the plate between the pistons and insert a p at one side.

(c) Use compressed air to remove the pistons alterna ly from the cylinder.

CAUTION: Do not place your fingers in front of the pist when using compressed air.

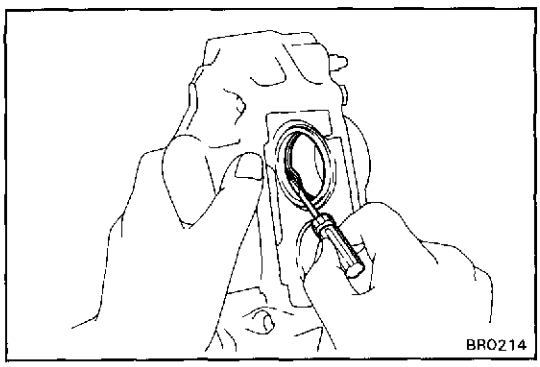

3. REMOVE PISTON SEALS

Using a screwdriver, remove the seals from the cylin

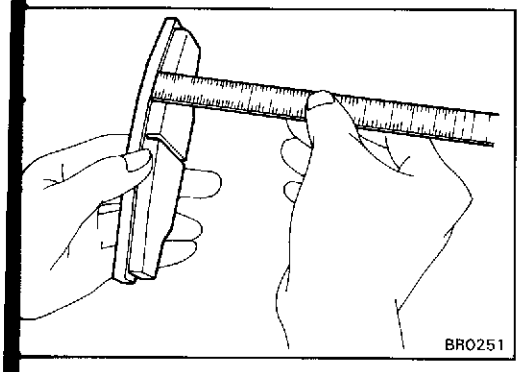
BR0251

INSPECTION AND REPAIR OF FRONT BRAKE COMPONENTS

1. MEASURE PAD LINING THICKNESS

Minimum thickness:

Except Australia:	**1.0 mm (0.039 in.)**
Australia:	**4.0 mm (0.157 in.)**
Standard thickness:	**9.5 mm (0.374 in.)**

Replace the pad if the thickness is less than the minimum (the 1.0 mm slit is no longer visible) or if it shows signs of uneven wear

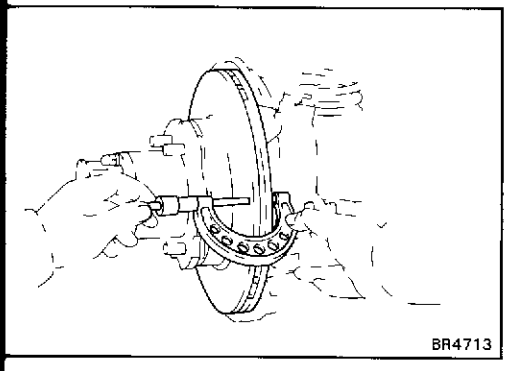
BR4713

2. MEASURE ROTOR DISC THICKNESS

Minimum thickness:

Light-Duty Rear Drum:	**11.5 mm (0.453 in.)**
Except above model:	**18.0 mm (0.709 in.)**

Standard thickness:

Light-Duty Rear Drum:	**12.5 mm (0.492 in.)**
Except above model:	**20.0 mm (0.787 in.)**

If the disc is scored or worn, or if its thickness is less than minimum, repair or replace.

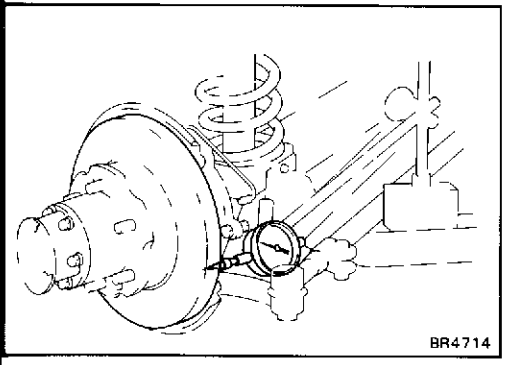
BR4714

3. MEASURE ROTOR DISC RUNOUT

Measure the rotor disc runout at 10 mm (0.39 in.) from the outer edge of the rotor disc.

Maximum disc runout: 0.15 mm (0.0059 in.)

If the runout is greater than the maximum, replace the disc.

HINT Before measuring the runout, confirm that the front bearing play is within specification.

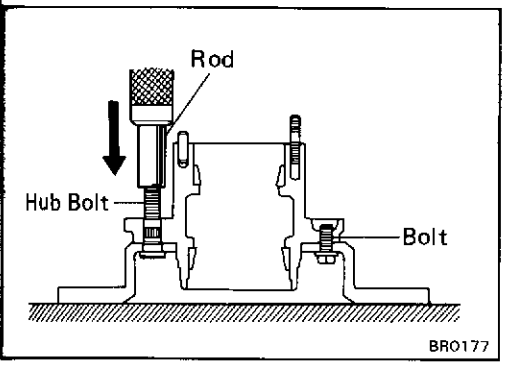

BR0177

4. IF NECESSARY, REPLACE ROTOR DISC

(a) Remove the axle hub.

(b) Using rod, press the hub bolts out of the axle hub.

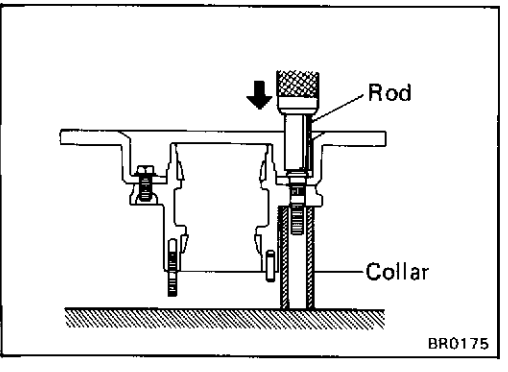

BR0175

(c) Using a collar and rod, press the hub bolts into the hub.

(d) Install the axle hub and adjust the front bearing preload.

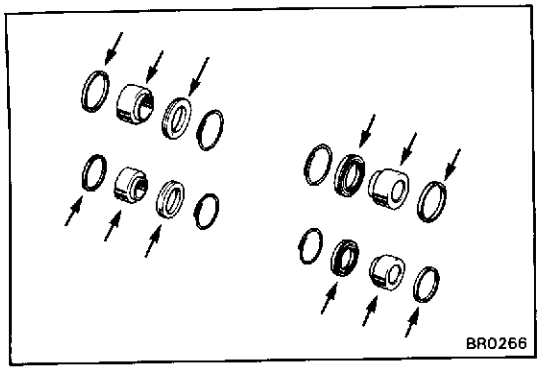
BR0266

ASSEMBLY OF CYLINDER

(See page BR-69)

1. APPLY LITHIUM SOAP BASE GLYCOL GREASE TO PARTS INDICATED BY ARROWS

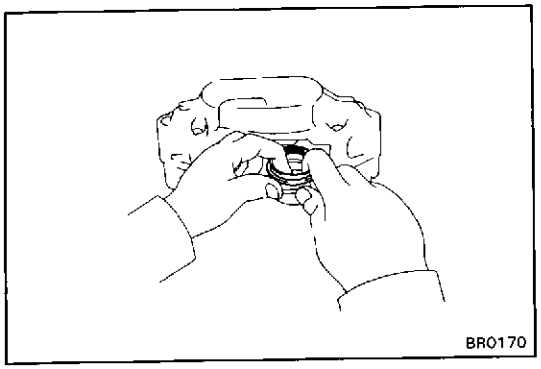
BR0170

2. INSTALL PISTON SEALS IN CYLINDER

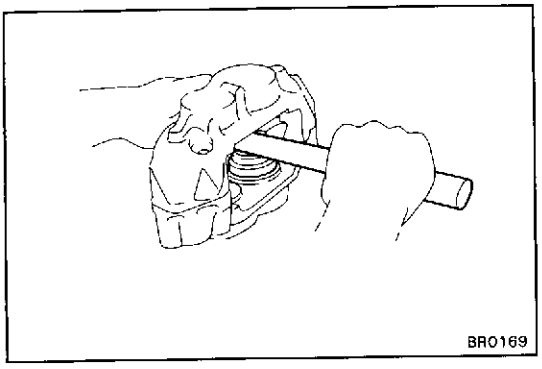
BR0169

3. INSTALL PISTONS IN CYLINDER

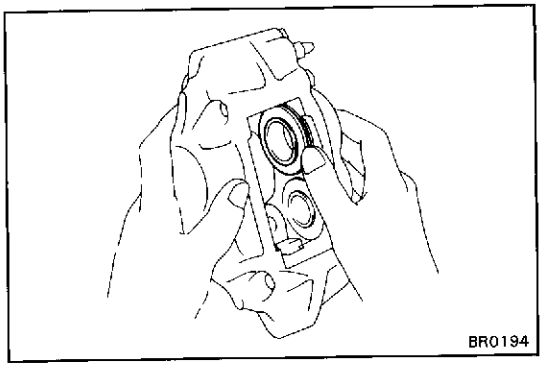
BR0194

4. INSTALL CYLINDER BOOTS AND SET RINGS IN CYLINDER

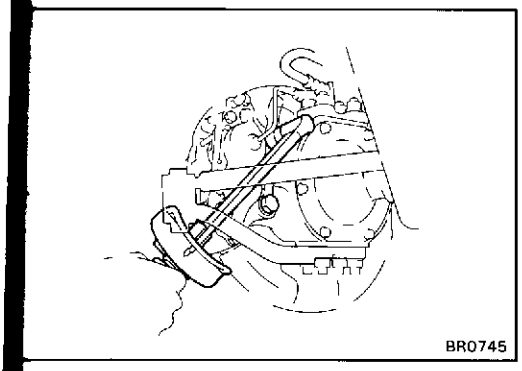

INSTALLATION OF CYLINDER

(See page BR-69)

1. **INSTALL CYLINDER**

   Install and torque the mounting bolts.

   Torque: 1,250 kg-cm (90 ft-lb, 123 N·m)

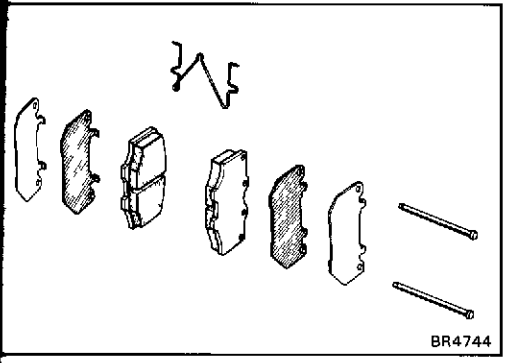

2. **INSTALL FOLLOWING PARTS**

   Before install the pads, install the four anti-squeal shims to the pads as shown.

   (a) Two pads

   (d) Anti-rattle spring

   (c) Two pins

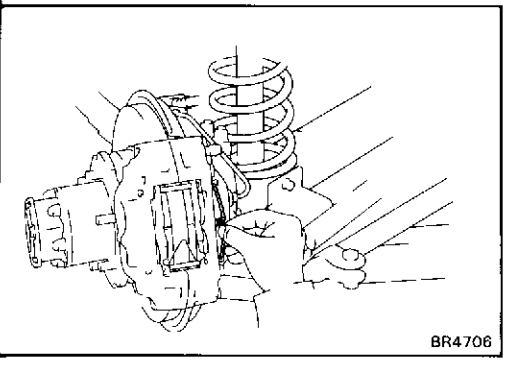

   (d) Anti-rattle clip

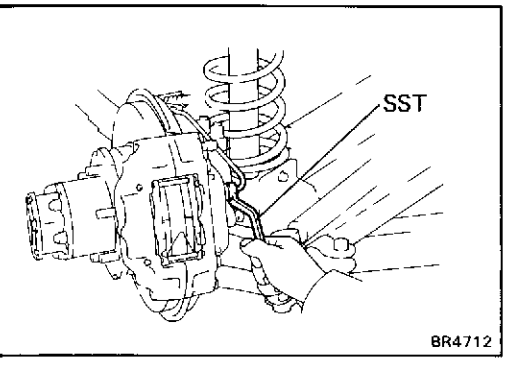

3. **CONNECT BRAKE TUBE**

   Using SST, connect the brake tube.

   SST 09751-36011

   Torque: 155 kg-cm (11 ft-lb, 15 N·m)

4. **FILL BRAKE RESERVOIR WITH BRAKE FLUID AND BLEED BRAKE SYSTEM**
   (See page BR-7)

5. **CHECK FOR FLUID LEAKAGE**

6. **INSTALL FRONT WHEEL**

REAR BRAKE

Drum Brake

COMPONENTS

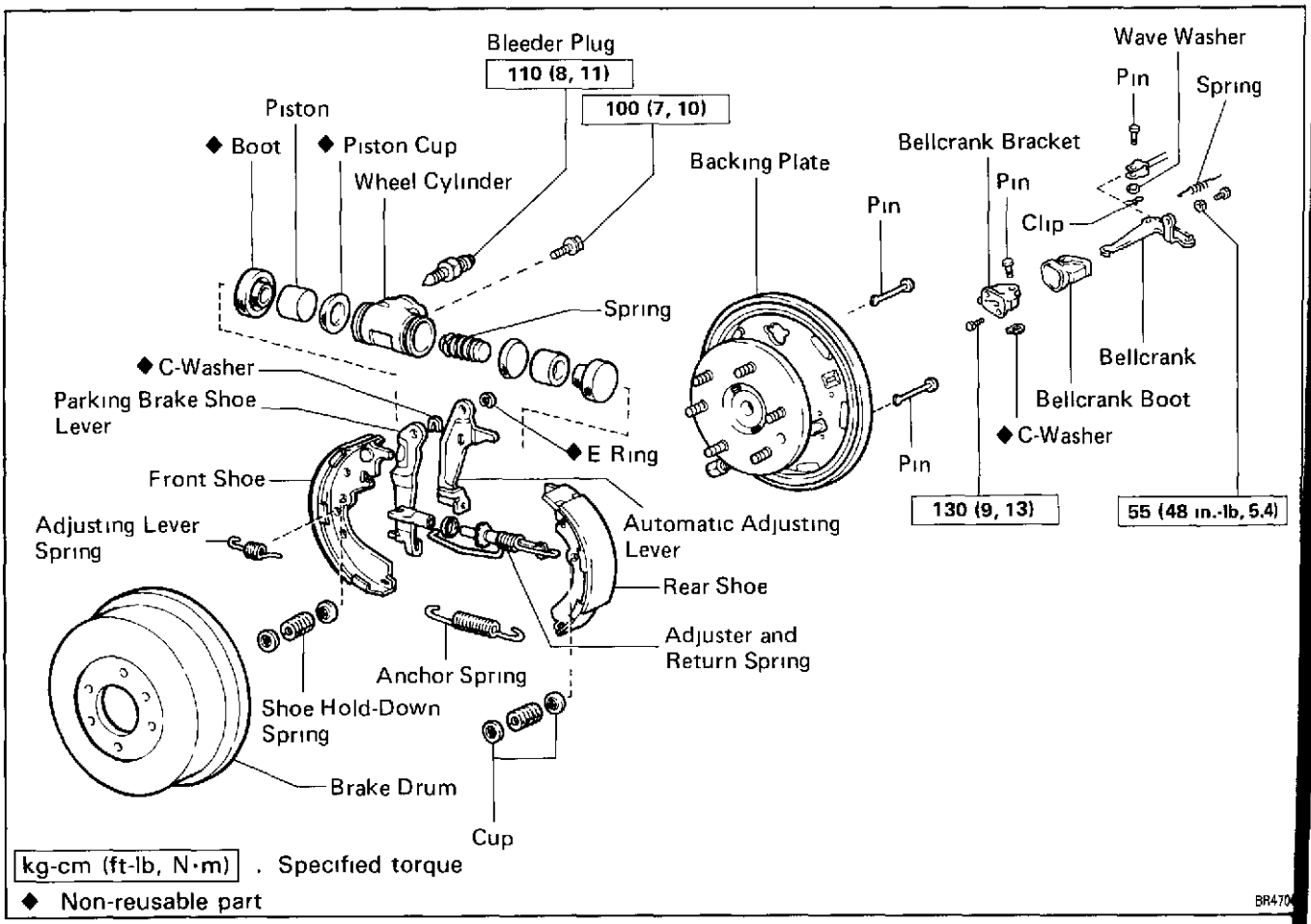

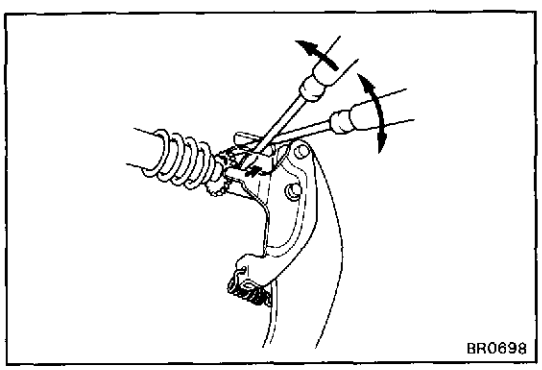

REMOVAL OF REAR BRAKE

1. REMOVE BRAKE DRUM

HINT: If the brake drum cannot be removed easily, pe form the following steps

(a) Remove the hole plug from the backing plate.

(b) Insert a screwdriver through the hole and hold the a justing lever away from the adjuster.

(c) Using another screwdriver, reduce the brake shoe a justment by turning the adjuster.

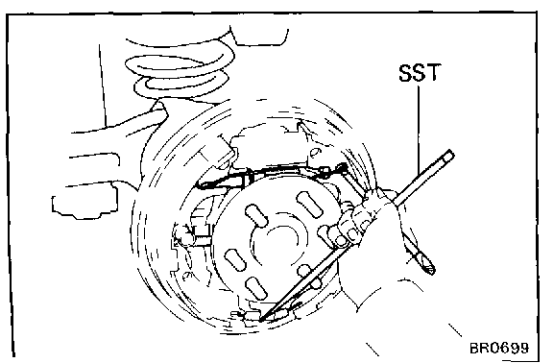

2. REMOVE REAR BRAKE SHOE

(a) Using SST, remove the return spring from the r shoe side.

SST 09703-30010

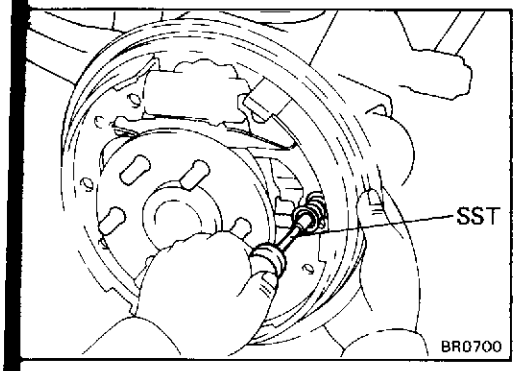

(b) Using SST, remove the two cups, shoe hold-down spring and pin.

SST 09718-00010

(c) Remove the rear brake shoe and anchor spring.

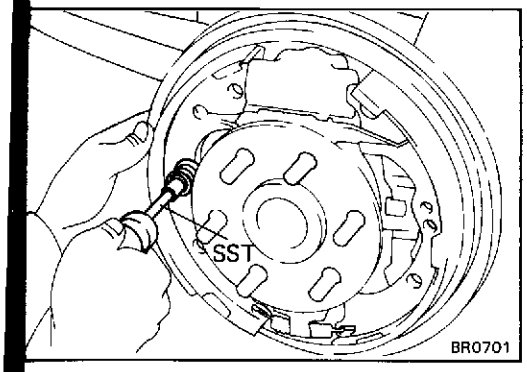

3. REMOVE FRONT BRAKE SHOE AND ADJUSTER

(a) Using SST, remove the two cups, shoe hold-down spring and pin, and remove the shoe.

SST 09718-00010

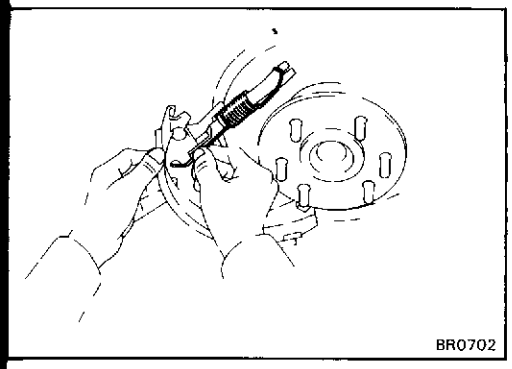

(b) Remove the adjuster and return spring from the parking brake shoe lever.

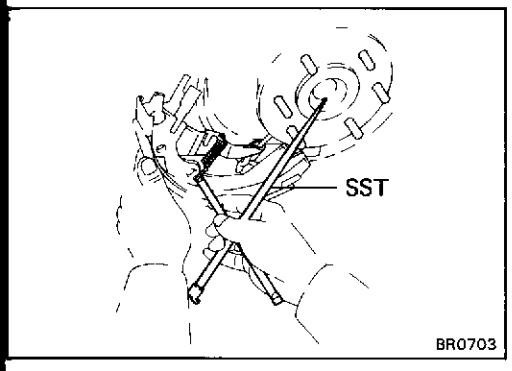

(c) Using SST, remove the adjusting lever spring.

SST 09703-30010

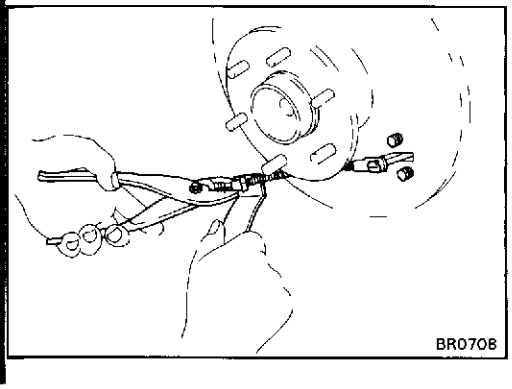

(d) Disconnect the parking brake cable from the parking brake shoe lever.

(e) Remove the parking brake cable.

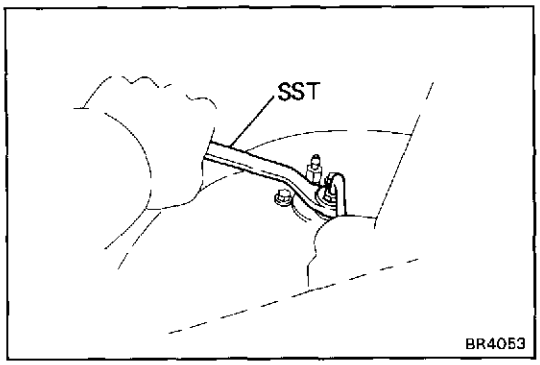

4. IF NECESSARY, REMOVE AND DISASSEMBLE WHEEL CYLINDER

(a) Using SST, disconnect the brake tube.
Use a container to catch the brake fluid.

SST 09751-36011

(b) Remove the two bolts and the wheel cylinder.

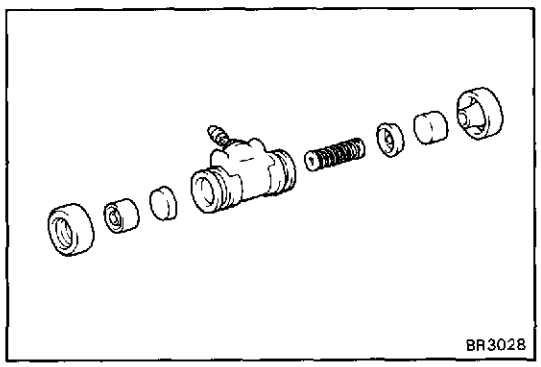

(c) Remove the two boots, two pistons, two piston cups and spring from the cylinder.

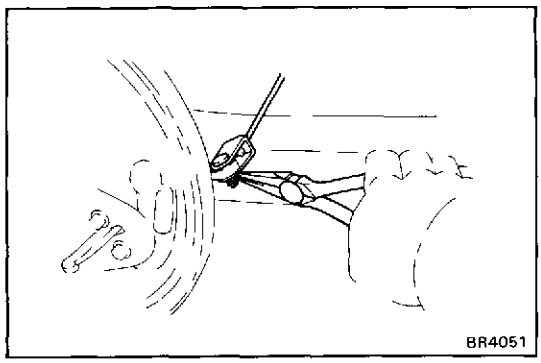

5. IF NECESSARY, REMOVE AND DISASSEMBLE BELLCRANK ASSEMBLY

(a) Remove the two tension springs from the bellcrank

(b) Remove the clip and pin, then disconnect the parking brake cable.

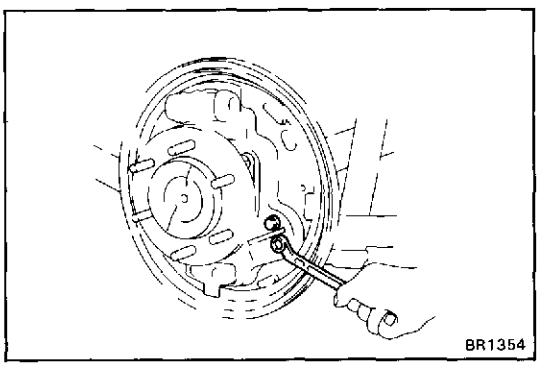

(c) Remove the two bolts and parking brake bellcrank assembly.

(d) Remove the boot from the parking brake bellcrank bracket.

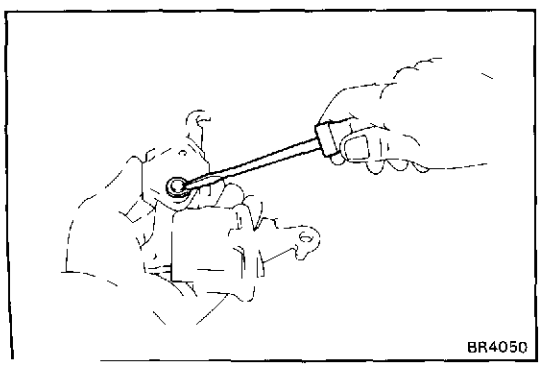

(e) Using a screwdriver, remove the C-washer and

(f) Remove the parking brake bellcrank from the cr bracket.

(g) Remove the boot.

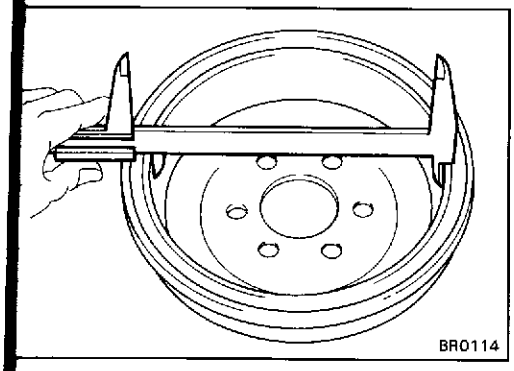
BR0114

INSPECTION AND REPLACEMENT OF REAR BRAKE COMPONENTS

1. MEASURE BRAKE DRUM INSIDE DIAMETER

Maximum inside diameter:

Heavy-Duty: 297.0 mm (11.693 in.)
Light-Duty: 256.0 mm (10.079 in.)

Standard inside diameter:

Heavy-Duty: 295.0 mm (11.614 in.)
Light-Duty: 254.0 mm (10.000 in.)

If the drum is scored or worn, the brake drum may be lathed.

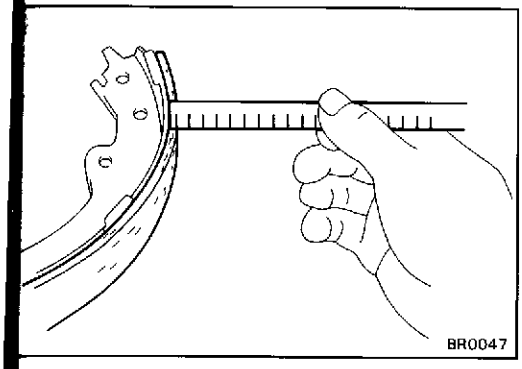
BR0047

2. MEASURE BRAKE SHOE LINING THICKNESS

Minimum thickness:

Heavy-Duty: 1.5 mm (0.059 in.)
Light-Duty: 1.0 mm (0.039 in.)

Standard thickness:

Heavy-Duty: 6.5 mm (0.256 in.)
Light-Duty: 5.0 mm (0.197 in.)

If the shoe lining is less than minimum or shows signs of uneven wear, replace the brake shoes.

HINT: If any of the brake shoes have to be replaced, replace all of the brake shoes in order to maintain even braking.

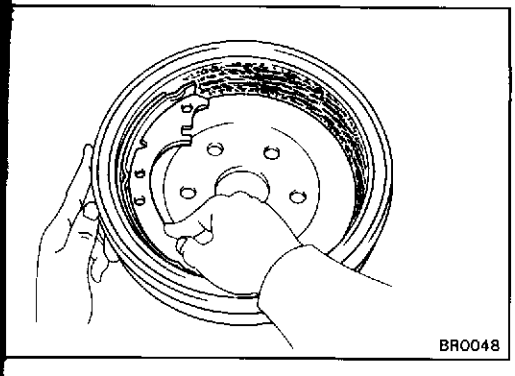
BR0048

3. INSPECT BRAKE LINING AND DRUM FOR PROPER CONTACT

If the contact between the brake lining and drum is improper, repair the lining with a brake shoe grinder, or replace the brake shoe assembly.

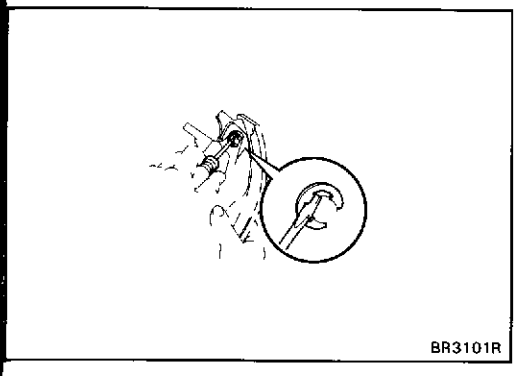
BR3101R

4. IF NECESSARY, REPLACE BRAKE SHOES

(a) Using a screwdriver, remove the automatic adjusting lever from the front shoe.

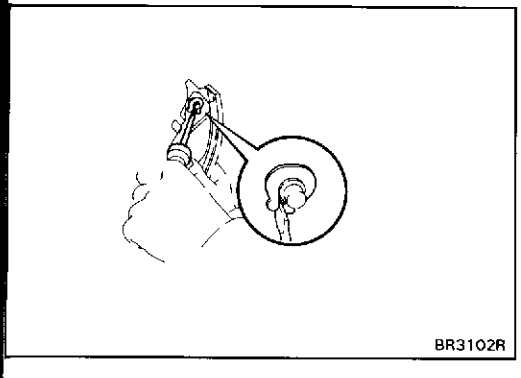
BR3102R

(b) Using a screwdriver, remove the parking brake shoe lever from the front shoe.

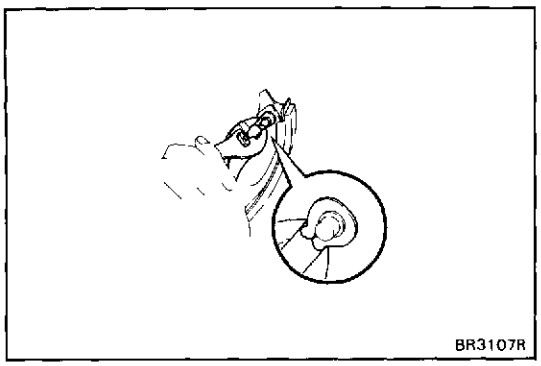
BR3107R

(c) Using pliers, install the parking brake shoe lever with a new C-washer.

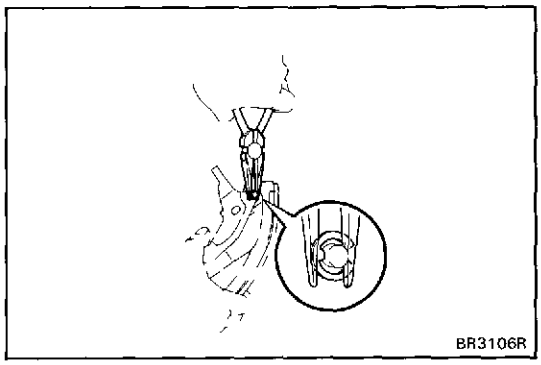
BR3106R

(d) Install the automatic adjusting lever with a new E-ring.

5. **INSPECT WHEEL CYLINDER FOR CORROSION OR DAMAGE**

6. **INSPECT BACKING PLATE FOR WEAR OR DAMAGE**

7. **INSPECT BELLCRANK PARTS FOR BENDING, WEAR OR DAMAGE**

INSTALLATION OF REAR BRAKE

(See page BR-76)

HINT: Assemble the parts in the correct direction as shown.

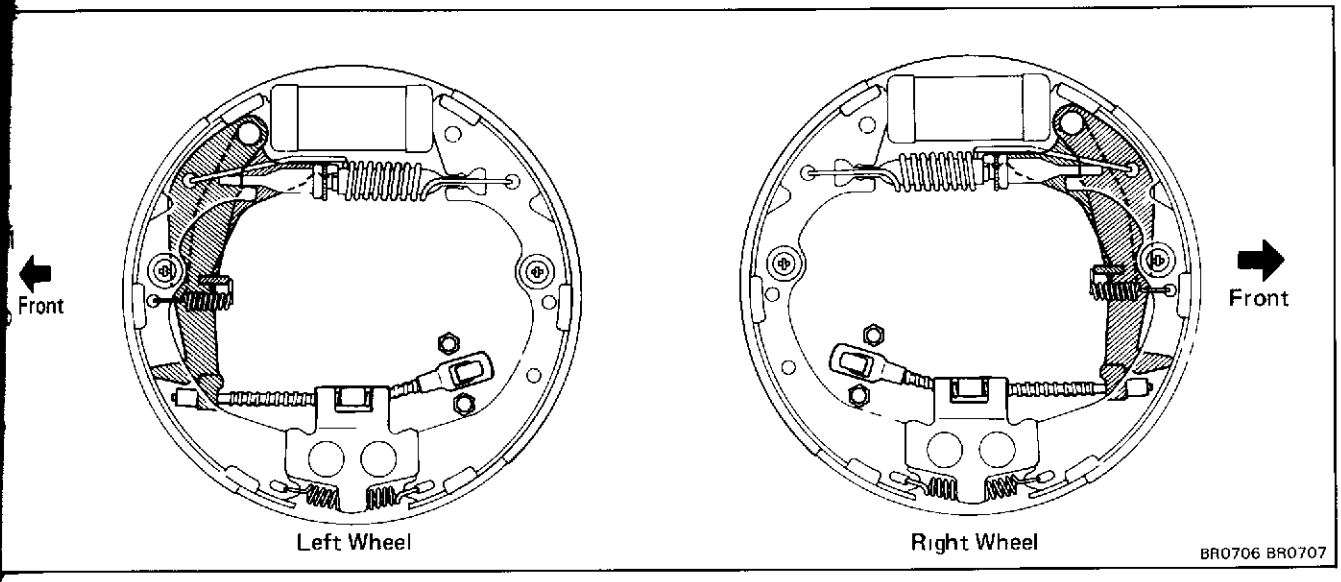

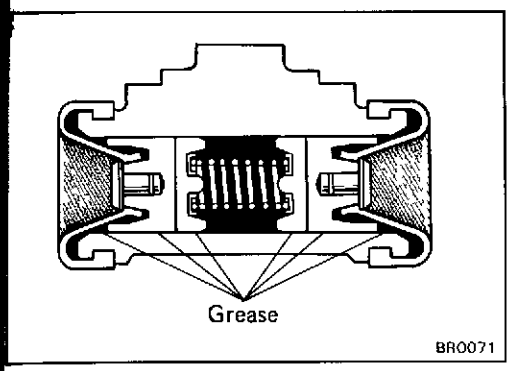

1. IF NECESSARY, ASSEMBLE AND INSTALL WHEEL CYLINDER

(a) Apply lithium soap base glycol grease to the piston cups and piston.

Install the spring and two piston cups in the wheel cylinder.

Make sure the flanges of the cups are pointed inward.

(b) Install two pistons. Apply lithium soap base glycol grease as shown, and install the two boots.

(c) Install the wheel cylinder on the backing plate with two bolts.

Torque: 100 kg-cm (7 ft-lb, 10 N·m)

(d) Using SST, connect the brake tube.

SST 09751-36011

Torque: 155 kg-cm (11 ft-lb, 15 N·m)

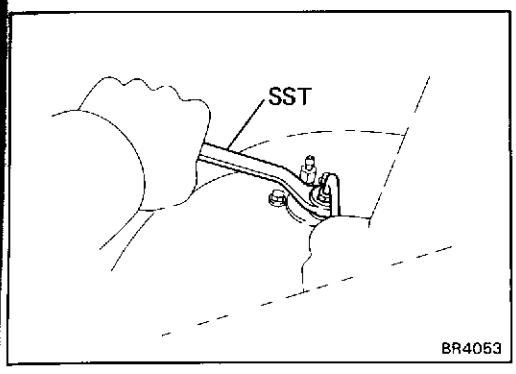

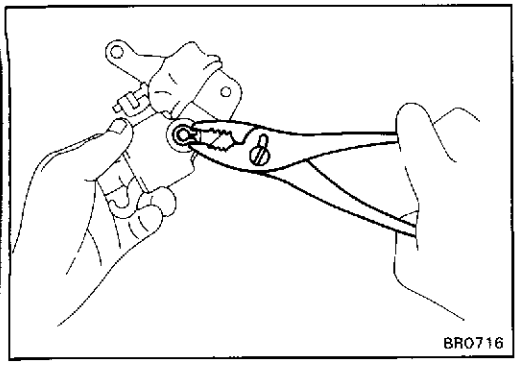

2. IF NECESSARY, ASSEMBLE AND INSTALL PARKING BRAKE BELLCRANK ASSEMBLY

(a) Apply lithium soap base glycol grease to the boot.

(b) Install the boot to the parking brake bellcrank

(c) Install the bellcrank to the crank bracket

(d) Install the pin with a new C-washer

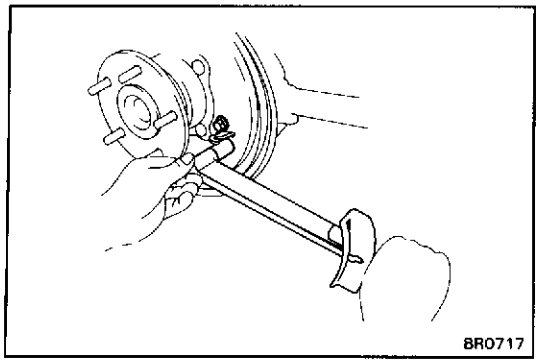

(e) Install the bellcrank assembly on the backing plate with two bolts.

(f) Torque the bolts.

Torque: 130 kg-cm (9 ft-lb, 13 N·m)

(g) Connect the parking brake cable to the bellcrank assembly with the pin and clip.

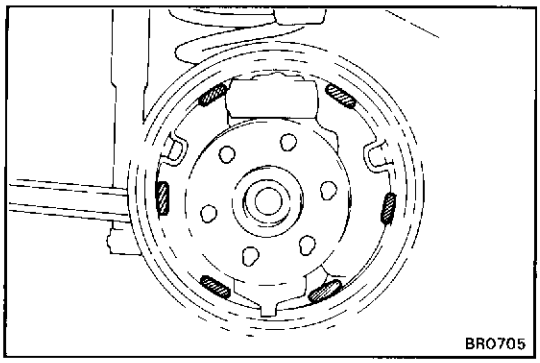

3. APPLY HIGH TEMPERATURE GREASE ON BACKING PLATE, AS SHOWN

Apply high temperature grease to the brake shoe contact surfaces.

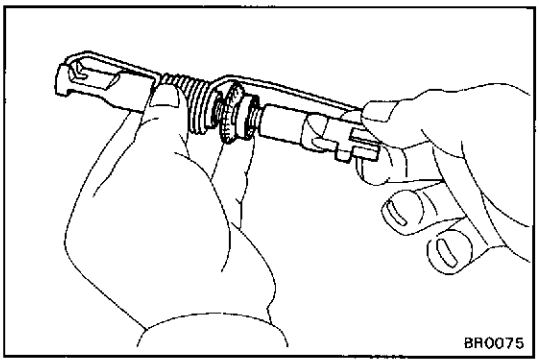

4. APPLY HIGH TEMPERATURE GREASE TO ADJUSTER BOLT THREADS AND ENDS

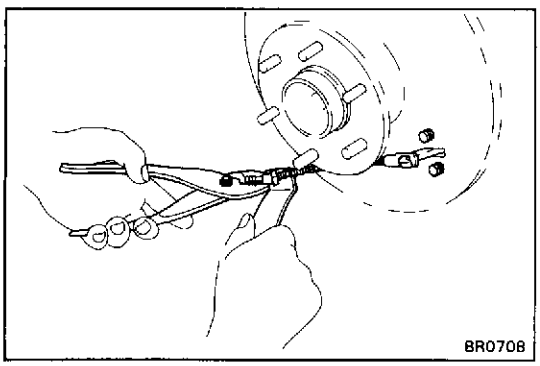

5. INSTALL PARKING BRAKE CABLE AND CONNECT TO PARKING BRAKE SHOE LEVER

(a) Install the parking brake cable to bellcrank as shown.

(b) Install parking brake cable to the parking brake shoe lever.

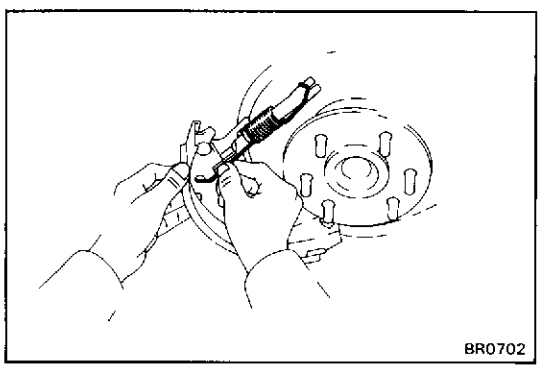

6. INSTALL ADJUSTER ONTO FRONT SHOE

(a) Install the adjuster and return spring onto the front shoe.

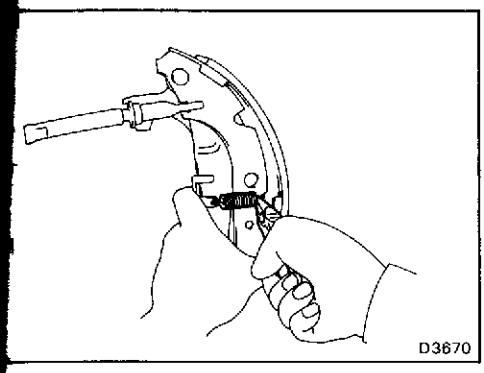

(b) Using SST, install the adjusting lever spring.

SST 09703-30010

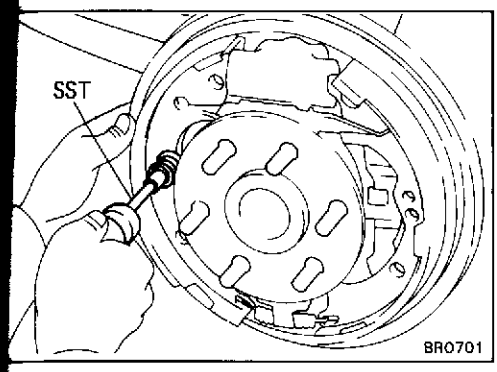

7. INSTALL FRONT SHOE

(a) Set the front shoe in place with the end of the shoe inserted in the wheel cylinder and the other end in the anchor plate.

(b) Using SST, install the pin, two cups and shoe hold-down spring.

SST 09718-00010

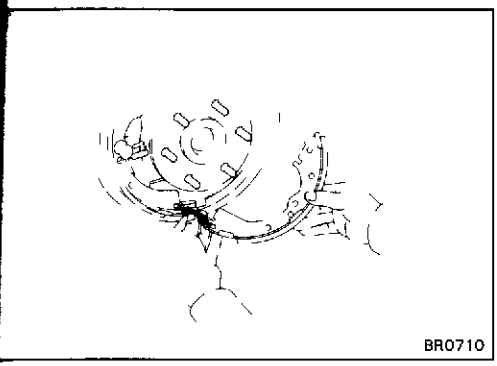

8. INSTALL REAR SHOE

(a) Install the anchor spring between the front and rear shoes.

(b) Set the rear shoe in place with the end of the shoe inserted in the wheel cylinder and the adjuster in place.

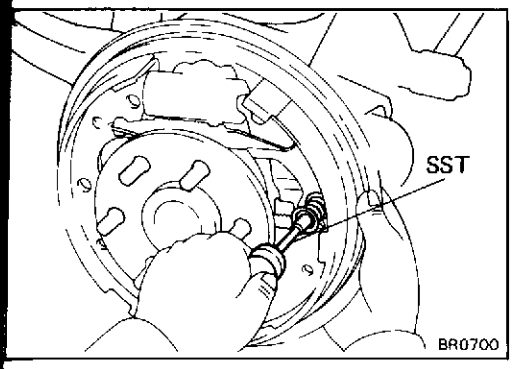

(c) Using SST, install the pin, two cups and shoe hold-down spring.

SST 09718-00010

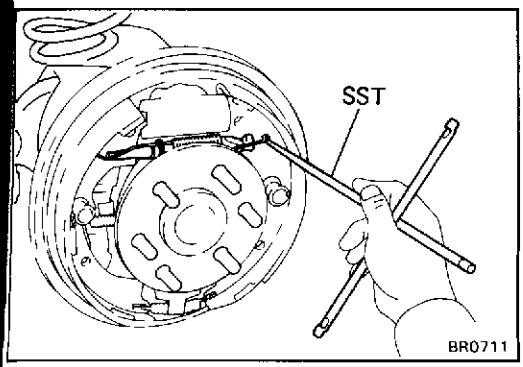

(d) Using SST, connect the return spring to the rear shoe.

SST 09703-30010

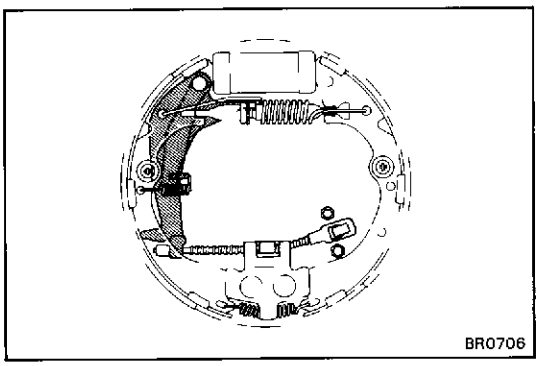
BR0706

9. CHECK OPERATION OF AUTOMATIC ADJUSTING MECHANISM

(a) Check that the adjusting bolt turns while pulling the parking brake cable rearward.

If the bolt does not turn, check the installation of the rear brakes.

(b) Adjust the adjuster to the shortest possible length.

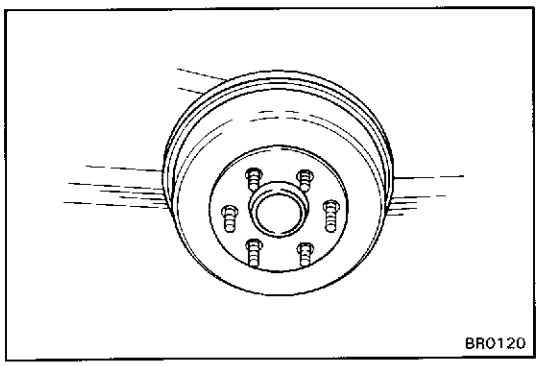
BR0120

(c) Install the drum.

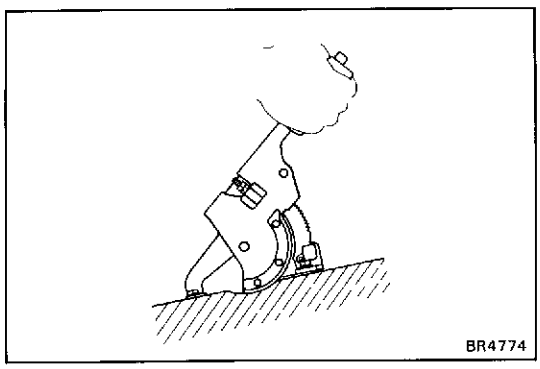
BR4774

(d) Pull the parking brake lever all the way up and down until the clicking sound can no longer be heard

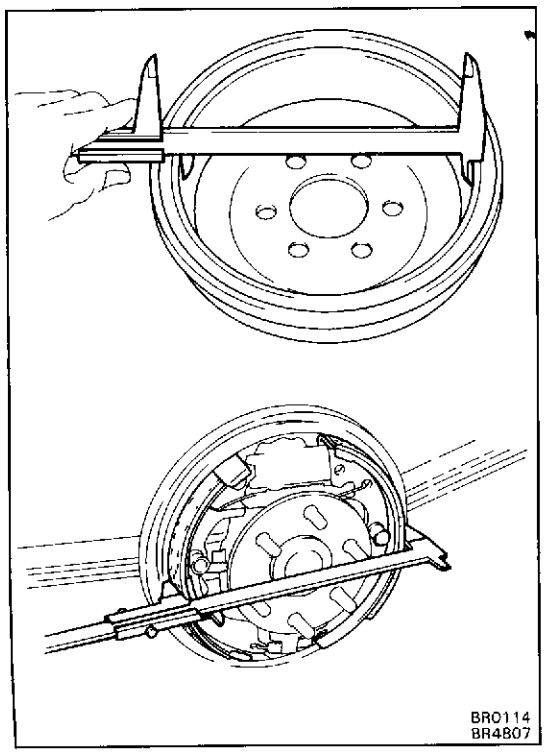
BR0114
BR4807

10. CHECK CLEARANCE BETWEEN BRAKE SHOES AND DRUM

(a) Remove the drum

(b) Measure the brake drum inside diameter and diameter of the brake shoes. Check that the difference between the diameter is the correct shoe clearance.

Shoe clearance: 0.6 mm (0.024 in.)

If incorrect, check the parking brake system.

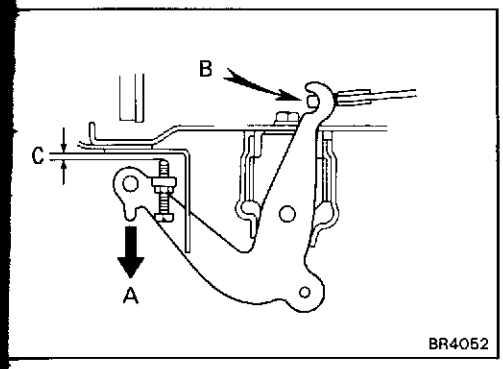

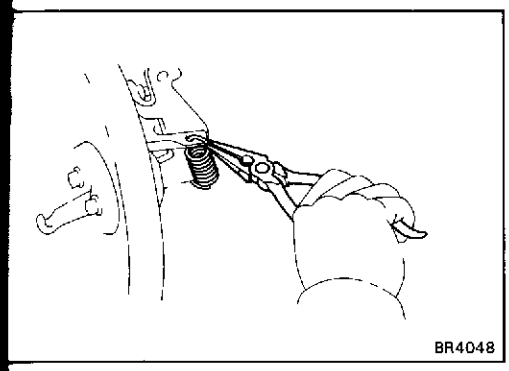

11. IF NECESSARY, ADJUST BELLCRANK

(a) Lightly pull the bellcrank in direction A until there is no slack at part B.

(b) In this condition, turn the adjusting bolt so that dimension C will be the following specification.

Heavy-Duty: 0.4 — 0.8 mm (0.016 — 0.031 in.)
Light-Duty: 0.2 — 0.7 mm (0.008 — 0.028 in.)

(c) Lock the adjusting bolt with the lock nut.

(d) Connect the parking brake cable No. 2 to the bellcrank

(e) Install the two tension springs.

12. INSTALL BRAKE DRUM AND REAR WHEEL

13. FILL BRAKE RESERVOIR WITH BRAKE FLUID AND BLEED BRAKE SYSTEM
(See page BR-7)

14. CHECK FOR FLUID LEAKAGE

BODY ELECTRICAL SYSTEM

	Page
GENERAL INFORMATION	BE-2
POWER SOURCE	BE-7
IGNITION SWITCH	BE-13
LIGHTING SYSTEM	BE-16
HEADLIGHT CLEANER SYSTEM	BE-35
WIPER AND WASHER SYSTEM	BE-38
COMBINATION METER	BE-47
DEFOGGER SYSTEM	BE-71
POWER WINDOW CONTROL SYSTEM	BE-74
POWER DOOR LOCK CONTROL SYSTEM	BE-82
SLIDING ROOF SYSTEM	BE-87
POWER MIRROR CONTROL SYSTEM	BE-90
FUEL TRANSFER SYSTEM	BE-92
AUDIO SYSTEM	BE-95
CLOCK	BE-114

Example

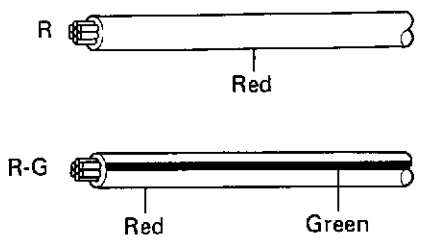

BE1359

GENERAL INFORMATION

Wiring color code

Wire colors are indicated by an alphabetical code.

B = Black	L = Blue	R = Red
BR = Brown	LG = Light Green	V = Violet
G = Green	O = Orange	W = White
GR = Gray	P = Pink	Y = Yellow

The first letter indicates the basic wire color and the second letter indicates the color of the stripe.

Example:

BE0832

Connector

1. **PIN NUMBER OF FEMALE CONNECTOR**

   Numbered in order from upper left to lower right.

2. **PIN NUMBER OF MALE CONNECTOR**

   Numbered in order from upper right to lower left.

HINT: When connectors with different or the same number of terminals are used with the same parts, each connector name (letter of the alphabet) and pin number is specified.

Example:

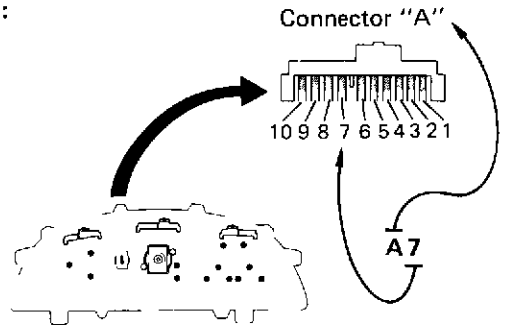

e.g. A7 = No. 7 pin of connector "A"

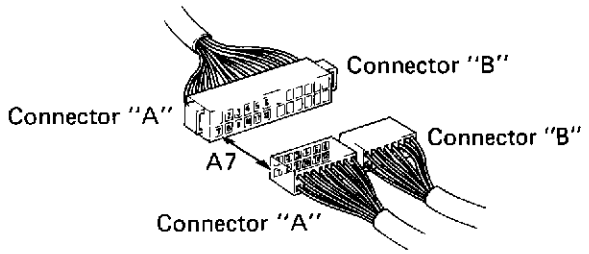

BE4339 BE413

Example:

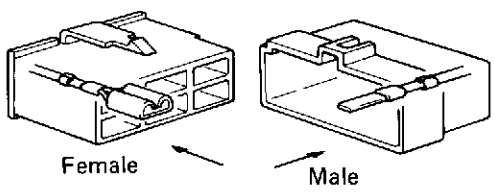

BE0833

3. **DISTINCTION OF MALE AND FEMALE CONNECTORS**

   Male and female connectors are distinguished by shape of their internal pins.

   (a) All connectors are shown from the open end, and the lock is on top.

   (b) To pull apart the connectors, pull on the connector itself, not the wires.

HINT: Check to see what kind of connector you are disconnecting before pulling apart.

Example:

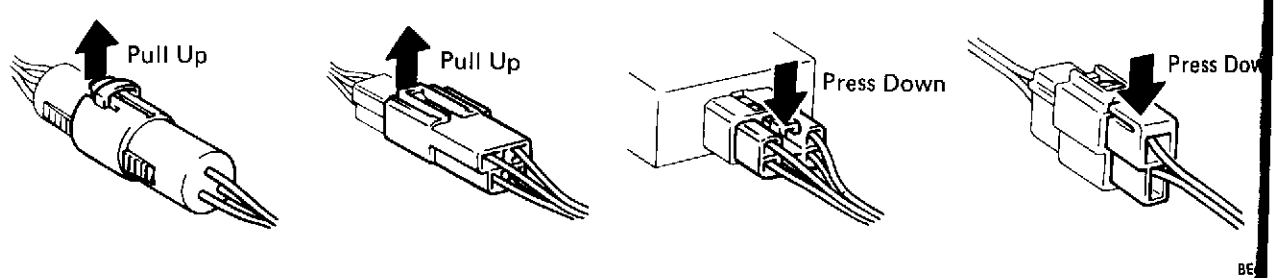

BE

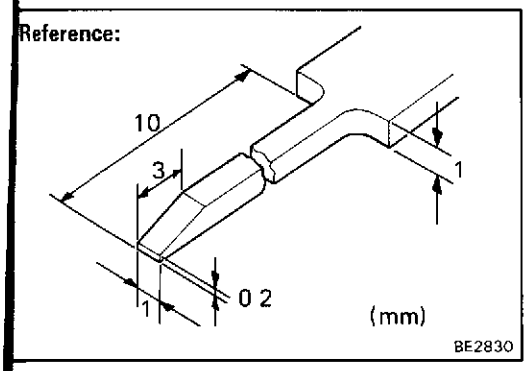

How to Replace Terminal

(with Terminal Retainer Type)

HINT: To remove the terminal for this type of connector, please construct and use the special tool or like object shown on the left.

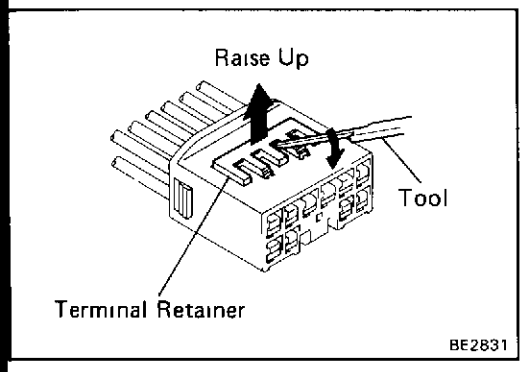

1. DISCONNECT CONNECTOR

Disconnect the connector according to the instructions on BE-2.

2. DISCONNECT TERMINAL FROM CONNECTOR

(a) Using the special tool, raise the retainer up to the temporary lock position.

HINT: The needle insertion position varies according to the connector's shape (number of terminals, etc.), so check the position before inserting it.

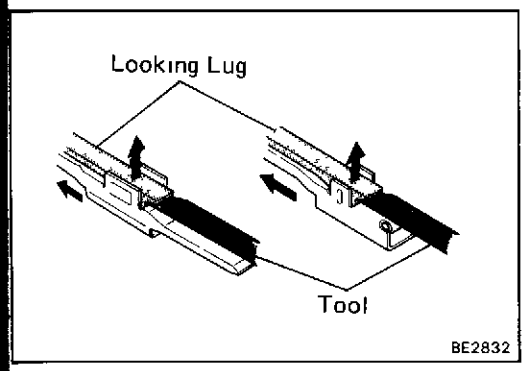

(b) Using the special tool, release the locking lug and pull the terminal out from rear.

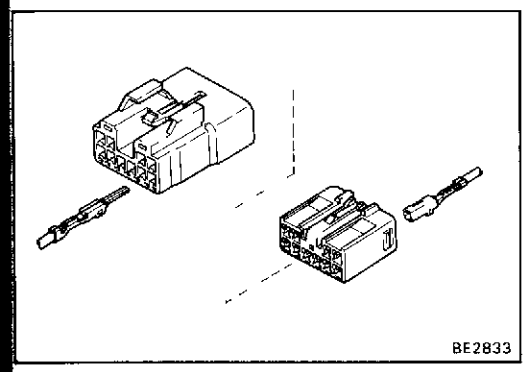

3. INSTALL TERMINAL TO CONNECTOR

(a) Insert the terminal.

HINT:

- Make sure the terminal is positioned correctly.
- Insert the terminal until the locking lug locks firmly
- Insert the terminal with retainer in the temporary lock position

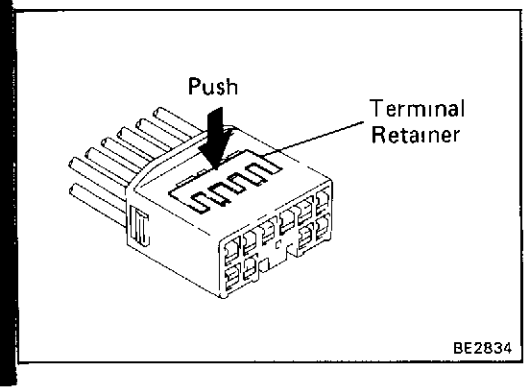

(b) Push the retainer in as far as the full lock position.

4. CONNECT CONNECTOR

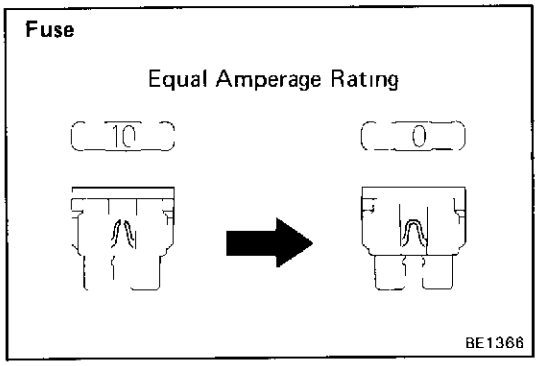

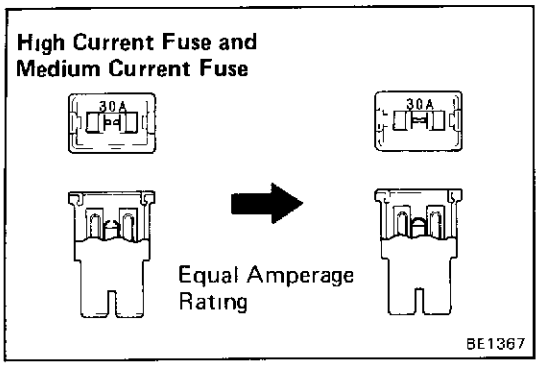

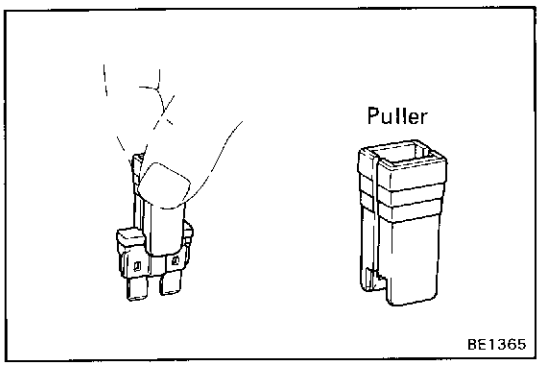

Replacement of Fuse

HINT: If replacing the fuse, be sure to replace it with a fuse with and equal amperage rating

NOTICE:

1. **Turn off all electrical components and the ignition switch before replacing a fuse. Do not exceed the fuse amperage rating.**
2. **Always use a fuse puller for removing and inserting a fuse. Remove and insert straight in and out without twisting Twisting could force open the terminals too much, resulting in a bad connection.**

If a fuse continues to blow, a short circuit is indicated The system must be checked by a qualified technician

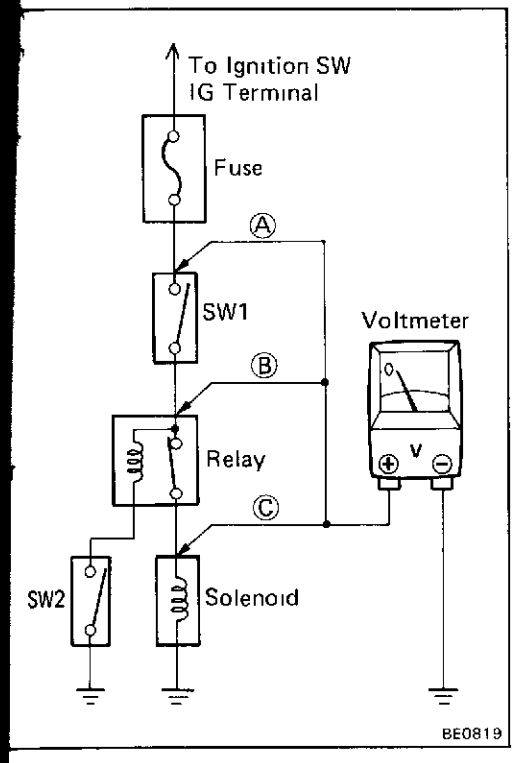

Check for Voltage

(a) Establish conditions in which voltage is present at the check point

Example:

Ⓐ — Ignition switch on.

Ⓑ — Ignition switch and switch 1 (SW1) on.

Ⓒ — Ignition switch, switch 1 (SW1) and relay on (switch 2 (SW2) off)

(b) Using a voltmeter, connect the negative (—) lead to a good ground point or negative (—) battery terminal and the positive (+) lead to the connector or component terminal. This check can be done with a test bulb instead of a voltmeter.

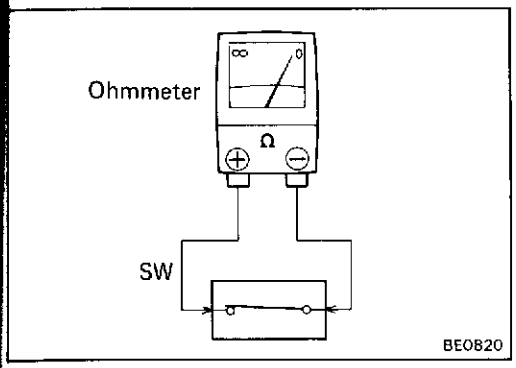

Check for Continuity and Resistance

(a) Disconnect the battery terminal or wire so there is no voltage between the check points.

(b) Contact the two leads of an ohmmeter to each of the check points.

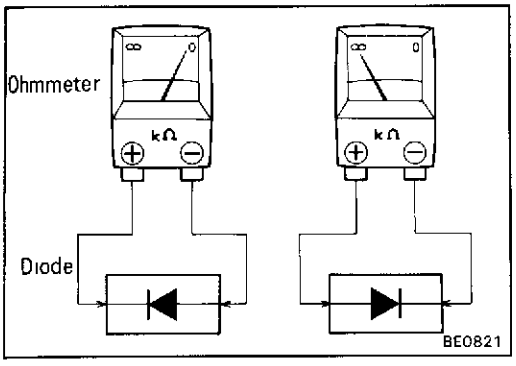

If the circuit has diodes, reverse the two leads and check again.

When contacting the negative (—) lead to the diode positive (+) side and the positive (+) lead to the negative (—) side, there should be continuity. When contacting the two leads in reverse, there should be no continuity.

HINT: Specifications may vary depending on the type of tester, so refer to the tester's instruction manual before performing the inspection.

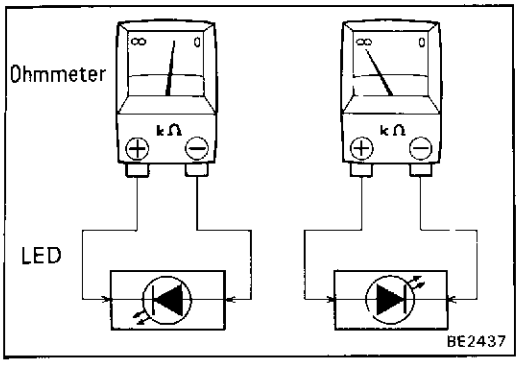

Check LED (Light Emitting Diode) in the same manner as that for diodes.

- Use a tester with a power source of 3 V or greater to overcome the circuit resistance.
- If a suitable tester is not available, apply battery voltage and check that the LED that the LED lights up.

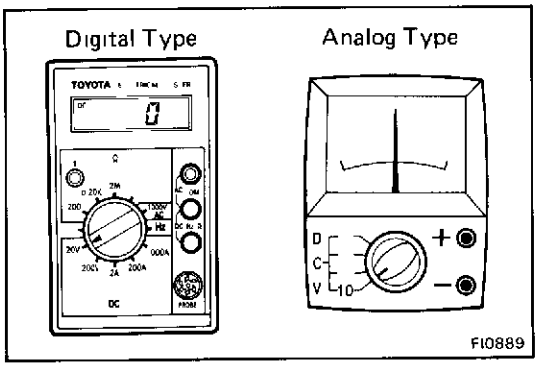

(c) Use a volt/ohmmeter with high impedance (10 kΩ minimum) for troubleshooting of the electrical circuit.

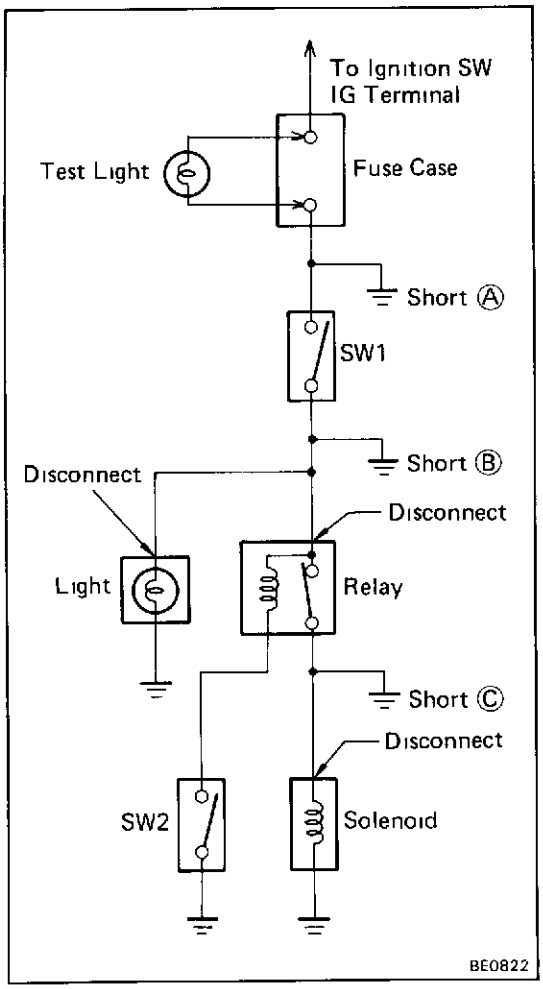

Check for Short Circuit

(a) Remove the blown fuse and eliminate all loads from the fuse.

(b) Connect a test bulb in place of the fuse.

(c) Establish conditions in which the test bulb comes on.

Example:

Ⓐ — Ignition switch on.

Ⓑ — Ignition switch and switch 1 (SW1) on.

Ⓒ — Ignition switch, switch 1 (SW1) and relay on (connect the relay) and switch 2 (SW2) off (or disconnect switch 2 (SW2)).

(d) Disconnect and reconnect the connectors while watching the test bulb.

The short lies between the connector where the test bulb stays lit and the connector where the bulb goes out.

(e) Find the exact location of the short by lightly shaking the problem wire along the body.

POWER SOURCE

Parts Location

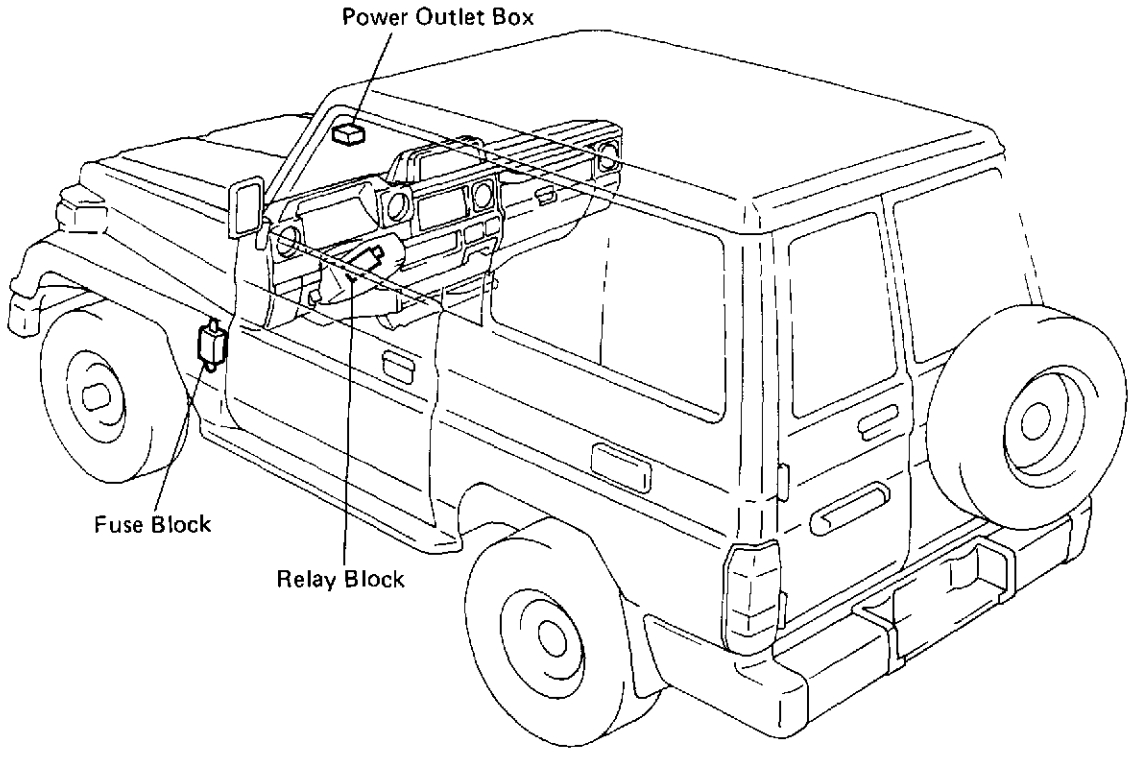

BE5374

Fuse Block

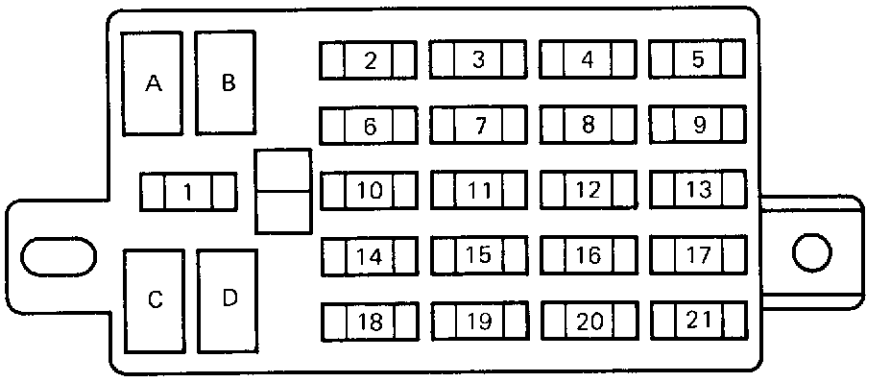

Fuses

Europe

1	*1 FUEL-HTR	15A
	*2 IGN	7.5A
2	(SPARE)	7.5A
3	A C	10A
4	DIFF	30A
5	TAIL (LH)	10A
6	(SPARE)	15A
7	TURN	7.5A
8	STOP	10A
9	TAIL (RH)	10A
10	CHARGE	7.5A
11	DEFOG	15A
12	DOME	7.5A
13.	HAZ-HORN	15A
14	CIG	15A
15	WIPER	20A
16	HEAD (LH LWR)	10A
17	HEAD (LH UPR)	10A
18	*1 ST	7.5A
	*2 EFI	15A
19	ENGINE	15A
20	HEAD (RH-LWR)	10A
21	HEAD (RH UPR)	10A

*1 w/o EFI
*2 w/ EFI

Medium Current Fuses

A	DOOR	30A
B	HEATER	30A
C	POWER	30A
D	–	

Models except Europe

1.	FUEL-HTR	15A
2	(SPARE)	7.5A
3	DEFOG	15A
4	GLOW	7.5A
5	STOP	10A
6	(SPARE)	15A
7	TAIL	20A
8	GAVERNOR	30A
9	DOME	7.5A
10	CHARGE	7.5A
11	A C	10A
12	ECD	15A
13	HAZ-HORN	15A
14	CIG	15A
15	WIPER	20A
16.	DIFF	20A
17	HEAD (LH)	10A
18	ST	7.5A
19	ENGINE	15A
20	TURN	10A
21	HEAD (RH-UPR)	10A

Power Outlet Box

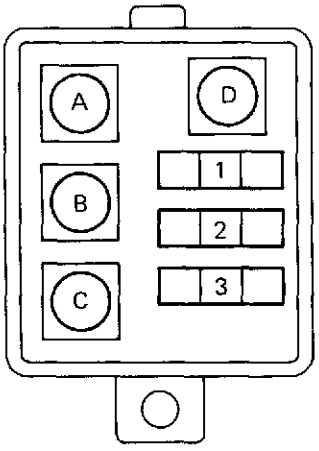

Fuses

	12V Vehicles			24V Vehicles	
1	ACC	10A	1	ACC	7.5A
2	IG	10A	2	IG	7.5A
3	+B	20A	3	+B	10A

Terminals

No.	Terminal Name	Connected Parts
A	ACC	Ignition Switch ACC
B	IG	Ignition Switch IG
C	+B	FL AM1
D	−E	Ground

Relay Block

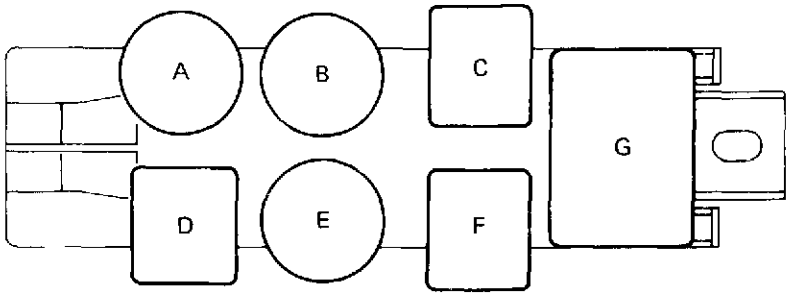

Relays

A Taillight Control Relay
B Transfer Control Relay
C Front Heater Relay
D. Headlight Control Relay
E Bulb Check Relay (Australia)
F. Headlight Dimmer Relay (Europe)
G Turn Signal Flahser

BE5118
BE5329

1HZ, 1PZ, 3L, 2L-T Engine

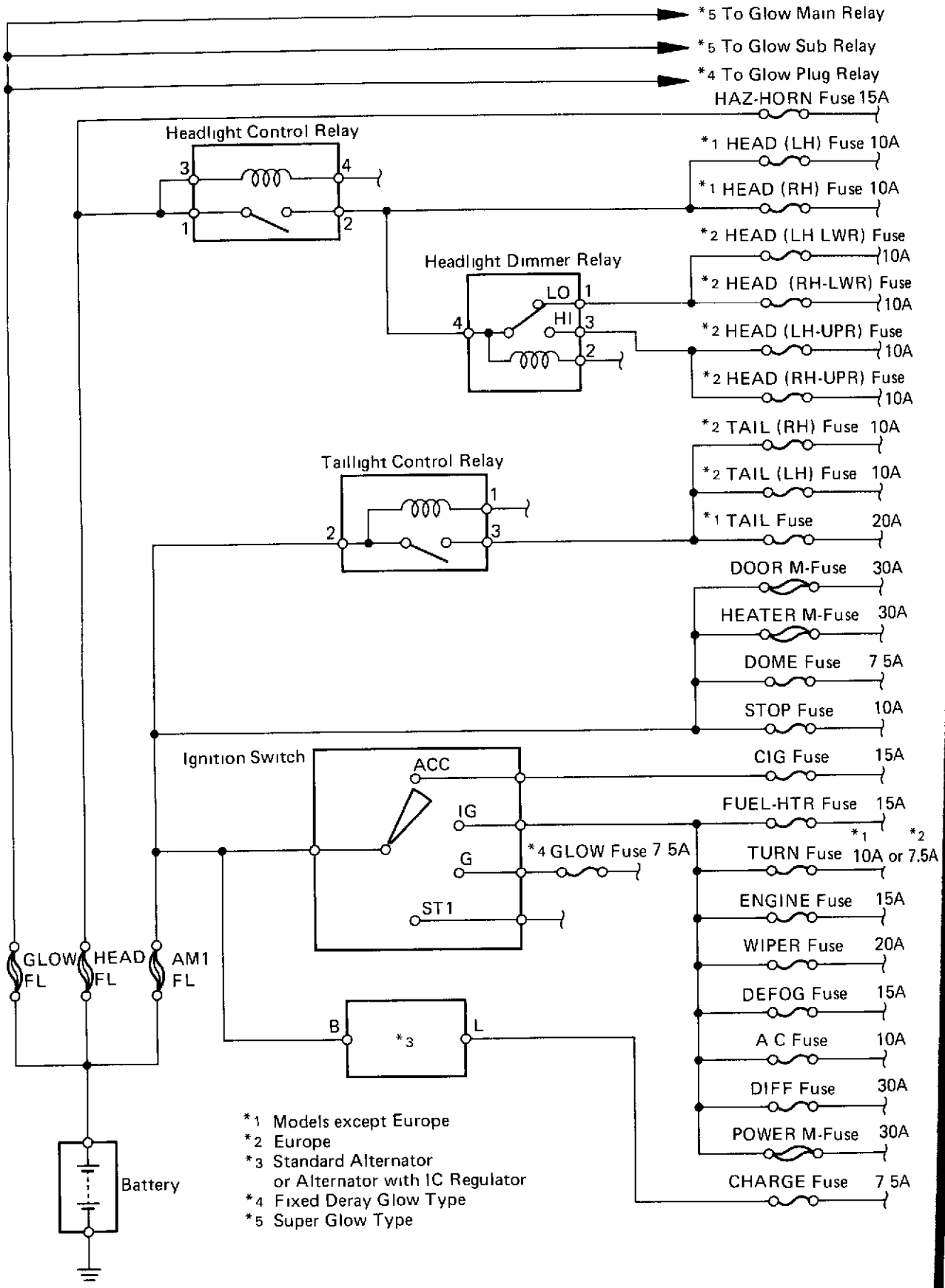

IGNITION SWITCH

Parts Location

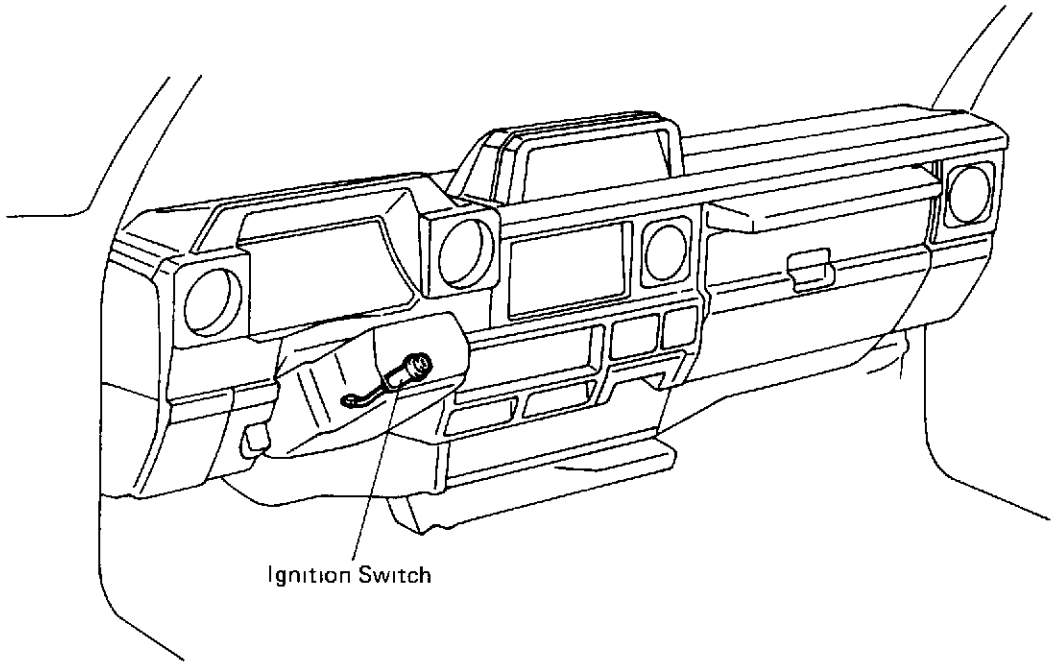

BE5331

Wiring and Connector Diagrams

(22R, 3F, 2L-T, engine and 1HZ, 1PZ engine w/ super glow)

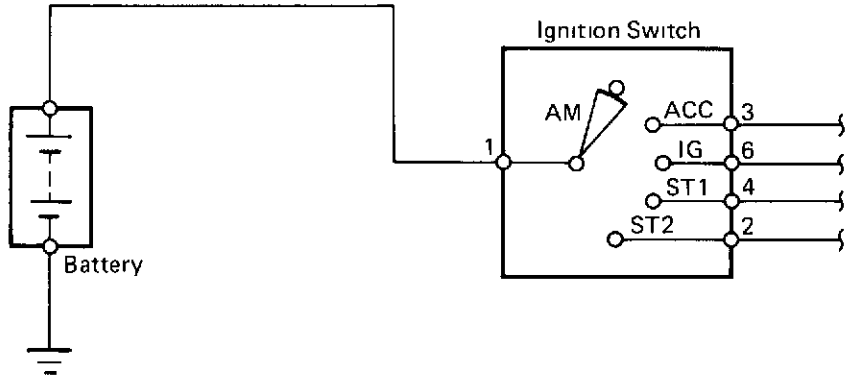

Ignition Switch

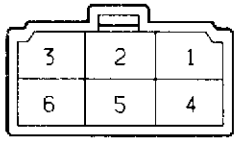

The POWER SOURCE CIRCUIT has been simplified. For full details, see pages BE-10, 11, 12.

BE5306 H 6 2

(1HZ, 1PZ, 3L engine w/o super glow)

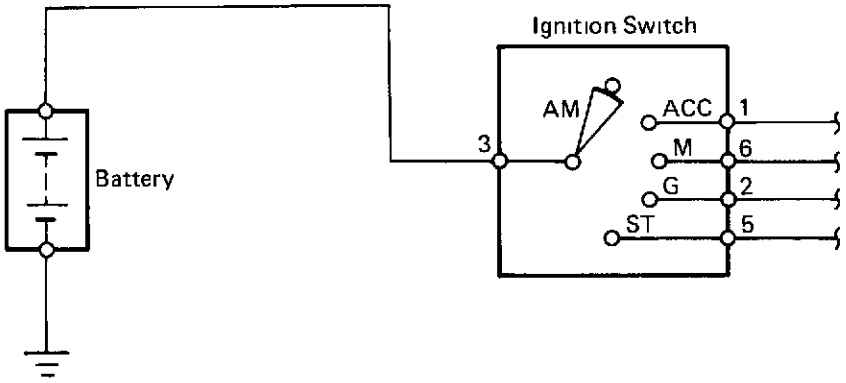

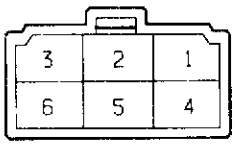

The POWER SOURCE CIRCUIT has been simplified For full details, see pages BE-10, 11, 12.

BE5306 H 6 2

(22R-E engine)

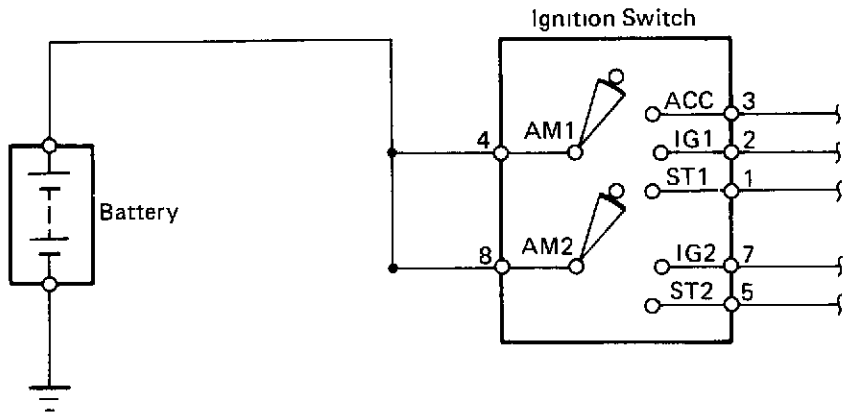

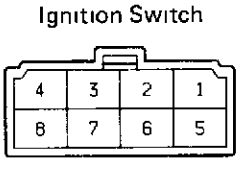

The POWER SOURCE CIRCUIT has been simplified. For full details, see pages BE-10, 11, 12

BE5307

Parts Inspection

Ignition system

INSPECT SWITCH
(Ignition Switch/Continuity)

(22R, 3F, 2L-T engine and 1HZ, 1PZ engine w/ super glow)

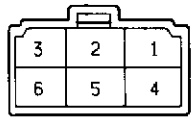

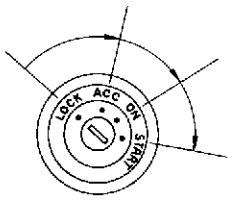

H 6 2 BE0900

Terminal / Switch Position	1	2	3	4	6
LOCK					
ACC	○		○		
ON	○		○		○
START	○	○		○	○

(1HZ, 1PZ, 3L engine w/o super glow)

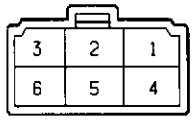

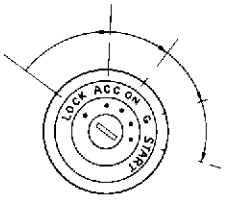

H 6 2 BE5308

Terminal / Switch Position	1	2	3	5	6
LOCK					
ACC	○		○		
ON	○		○		○
GLOW		○	○		○
START		○	○	○	○

(22R-E engine)

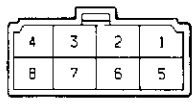

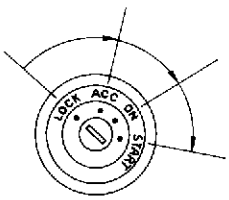

H 8 2 BE0900

Terminal / Switch Position	1	2	3	4	5	7	8
LOCK							
ACC			○	○			
ON		○	○	○		○	○
START	○	○		○	○	○	○

If continuity is not as specified, replace the switch.

LIGHTING SYSTEM

Parts Location

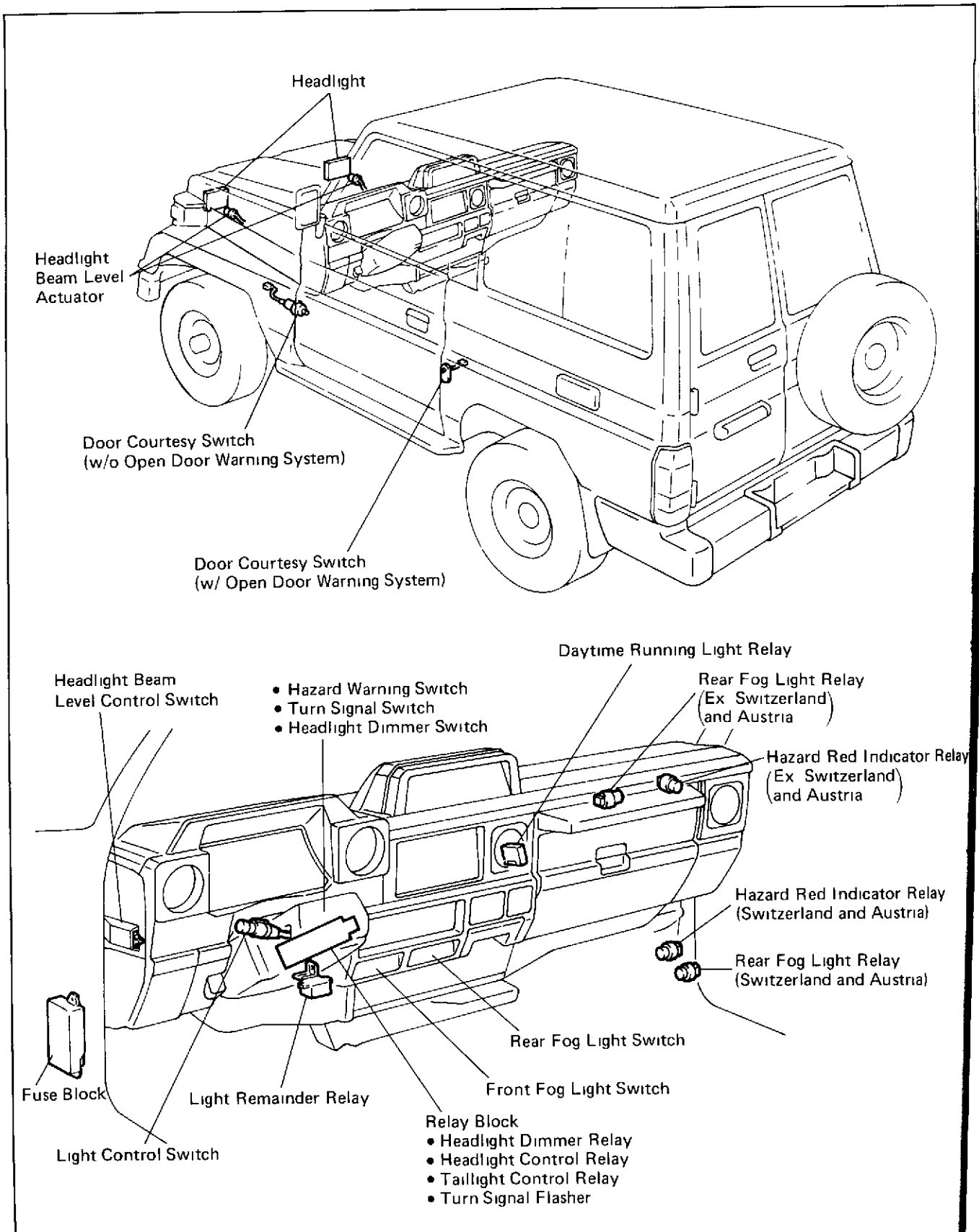

Wiring and Connector Diagrams

(Headlight and Taillight System)

Except Europe

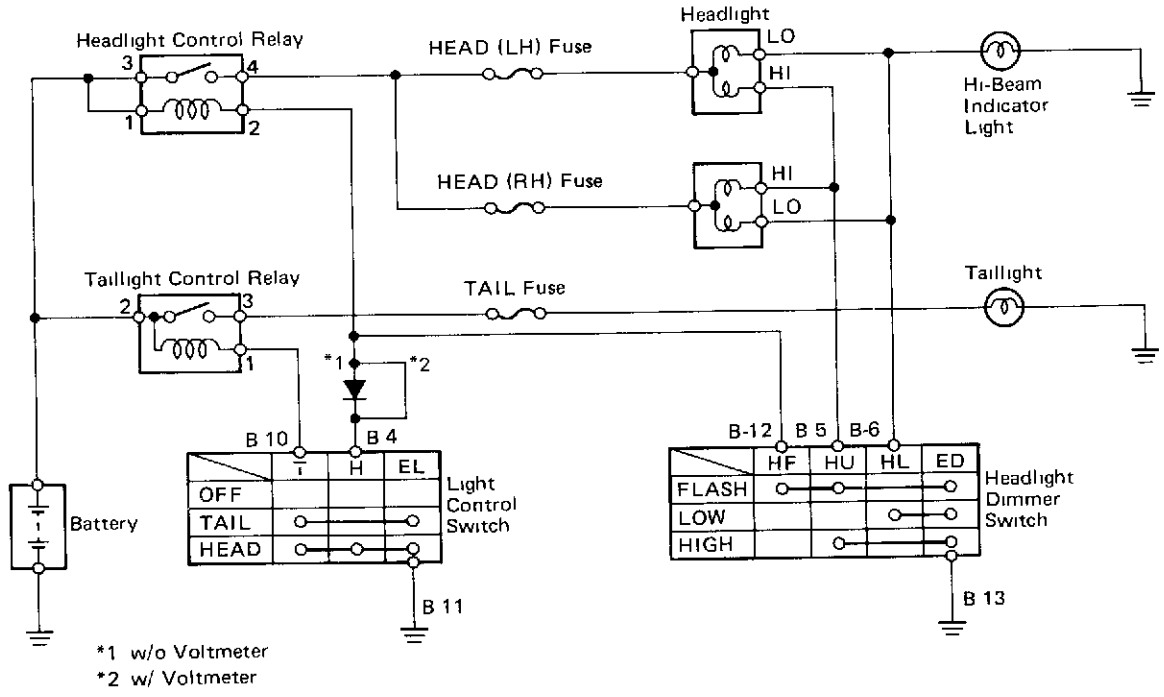

The POWER SOURCE CIRCUIT has been simplified For full details, see pages BE 10, 11, 12

•Europe

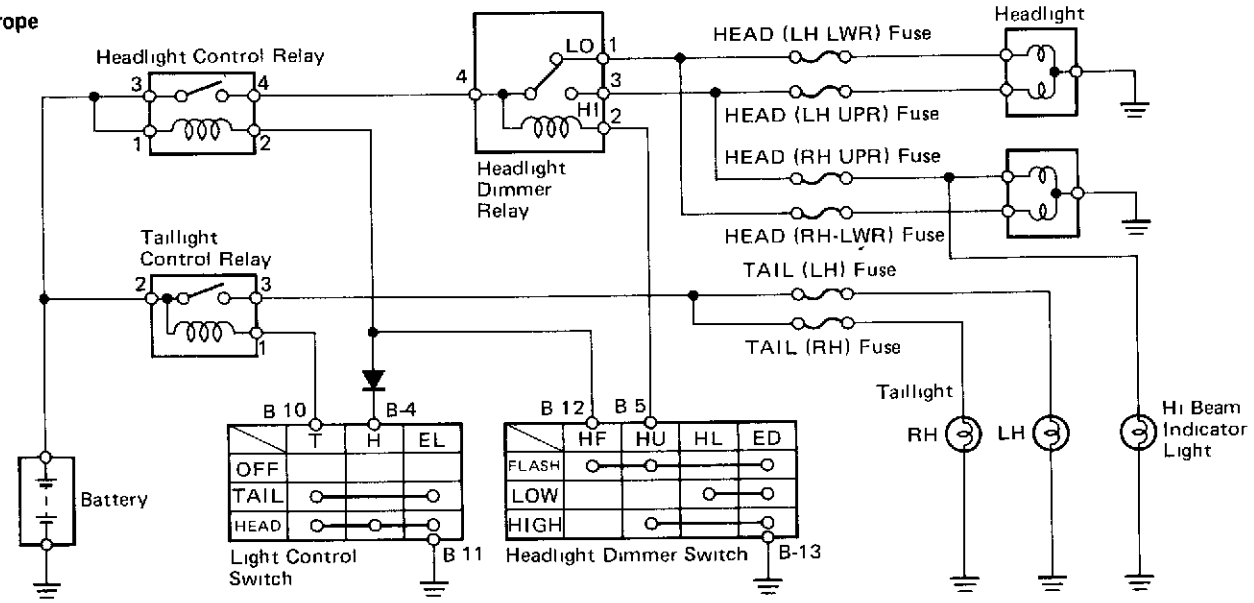

The POWER SOURCE CIRCUIT has been simplified. For full details, see pages BE-10, 11, 12

- Light Control Switch
- Dimmer Switch

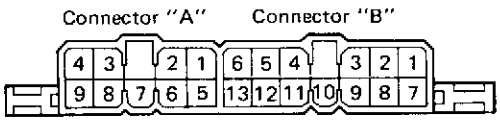

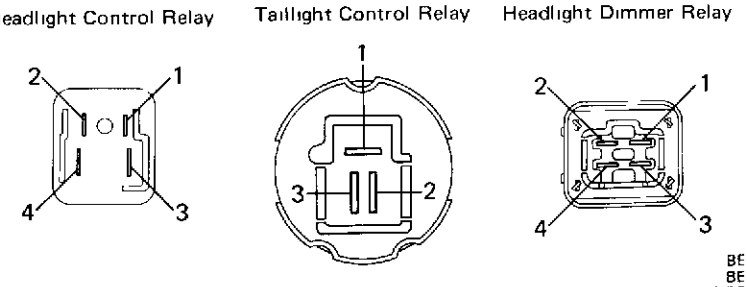

BE5333
BE5334
BE0111 BE1838 BE2763 BE1839

• **w/ Daytime Running Light System (with Rear Fog Light System)**

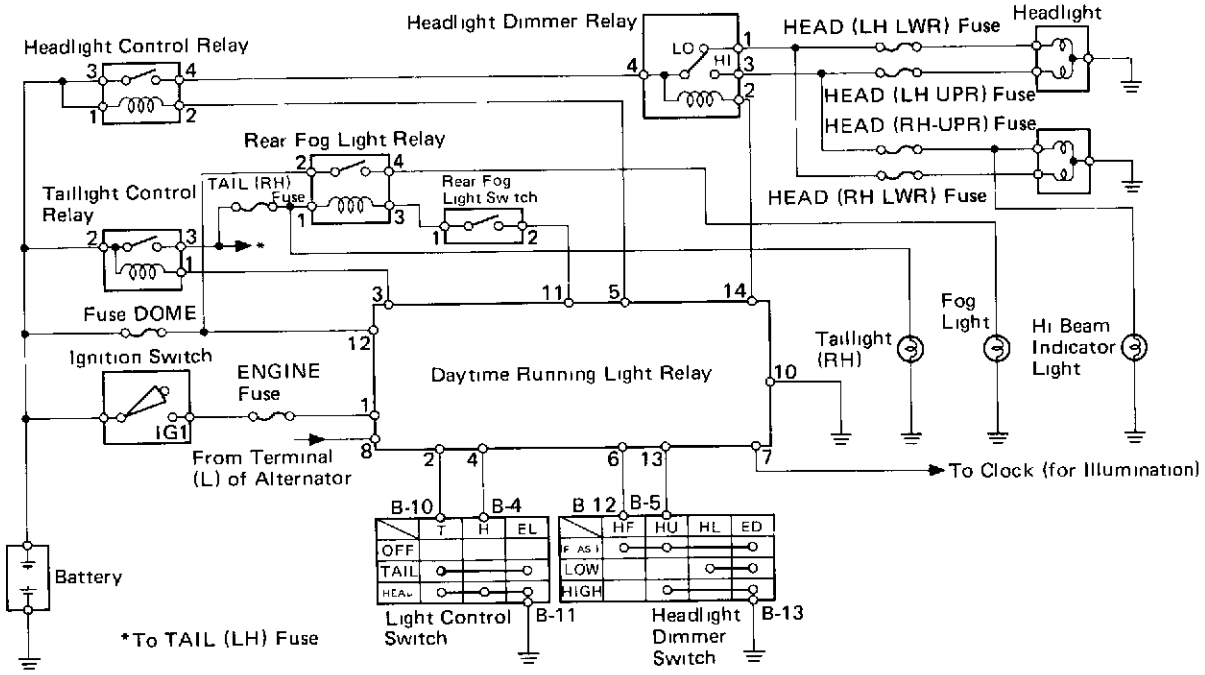

The POWER SOURCE CIRCUIT has been simplified For full details, see pages BE-10, 11, 12.

• Light Control Switch
• Dimmer Switch

Connector "A" Connector "B"

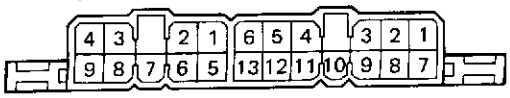

Daytime Running Light Relay

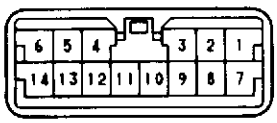

Headlight Control Relay

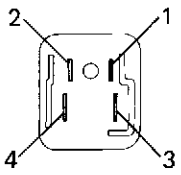

Taillight Control Relay

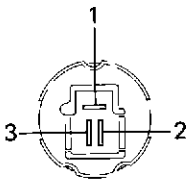

Headlight Dimmer Relay

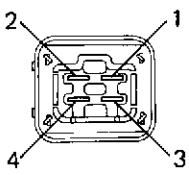

Rear Fog Light Switch

Rear Fog Light Relay

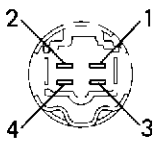

Front Fog Light System

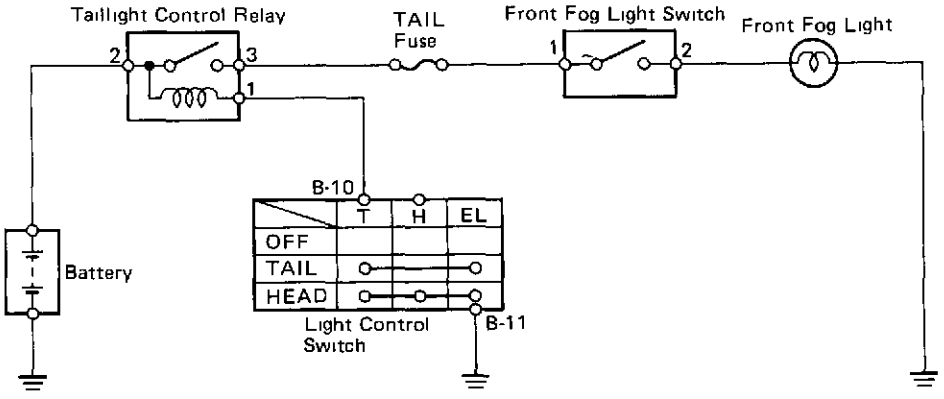

The POWER SOURCE CIRCUIT has been simplified For full details, see pages BE 10, 11, 12

Light Control Switch

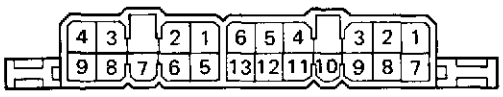

Taillight Control Relay

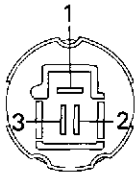

Front Fog Light Switch

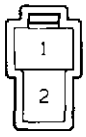

BE5336
BE0111 BE2763 H 2 2

Rear Fog Light System

w/ Daytime Running Light System

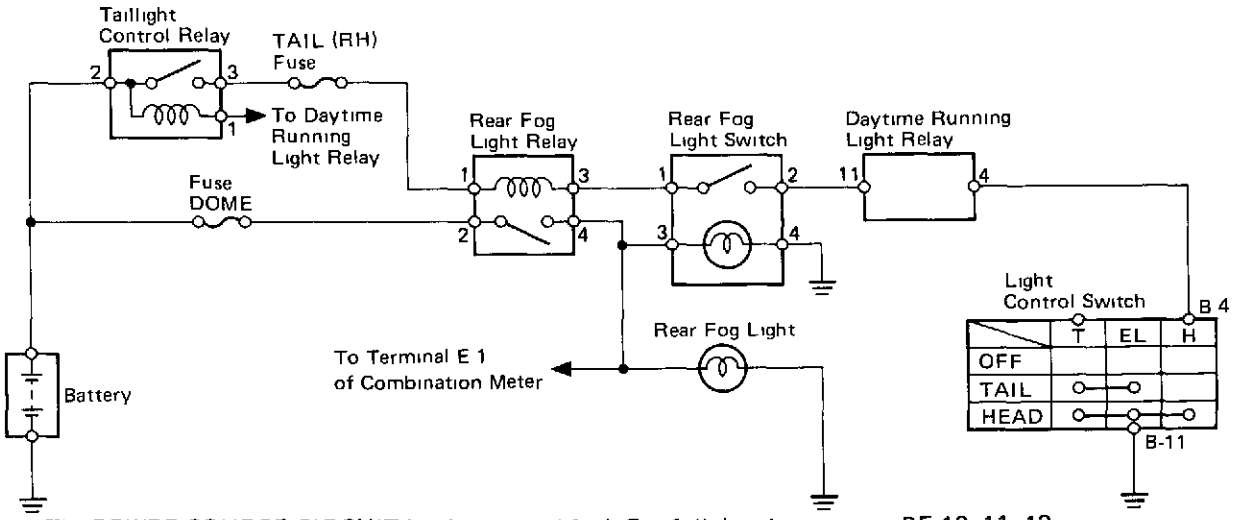

The POWER SOURCE CIRCUIT has been simplified. For full details, see pages BE 10, 11, 12.

Light Control Switch

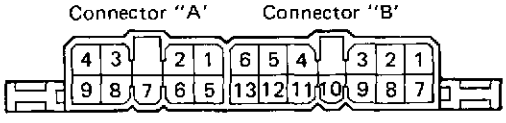

Rear Fog Light Switch

Rear Fog Light Relay

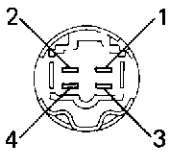

Daytime Running Light Relay

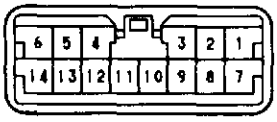

Taillight Control Relay

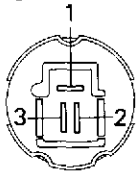

BE5337
BE0111 S 4 2-C BE1647
BE4219 BE2763

w/o Daytime Running Light System

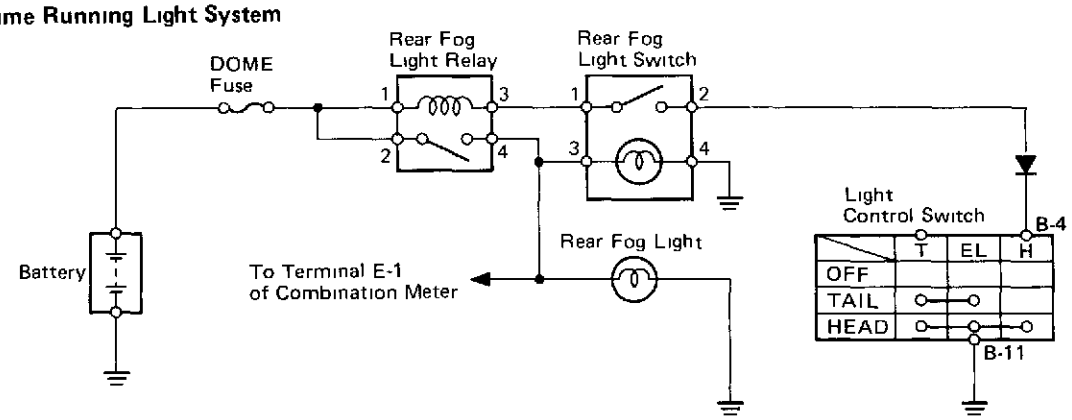

The POWER SOURCE CIRCUIT has been simplified For full details, see pages BE 10, 11, 12

Light Control Switch

Connector "A" Connector "B"

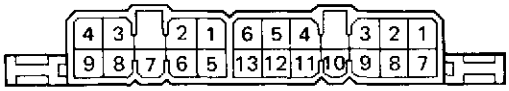

Rear Fog Light Switch

Rear Fog Light Relay

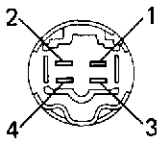

BE633
BE0111 S 4 2 C BE164

Turn Signal and Hazard Warning System

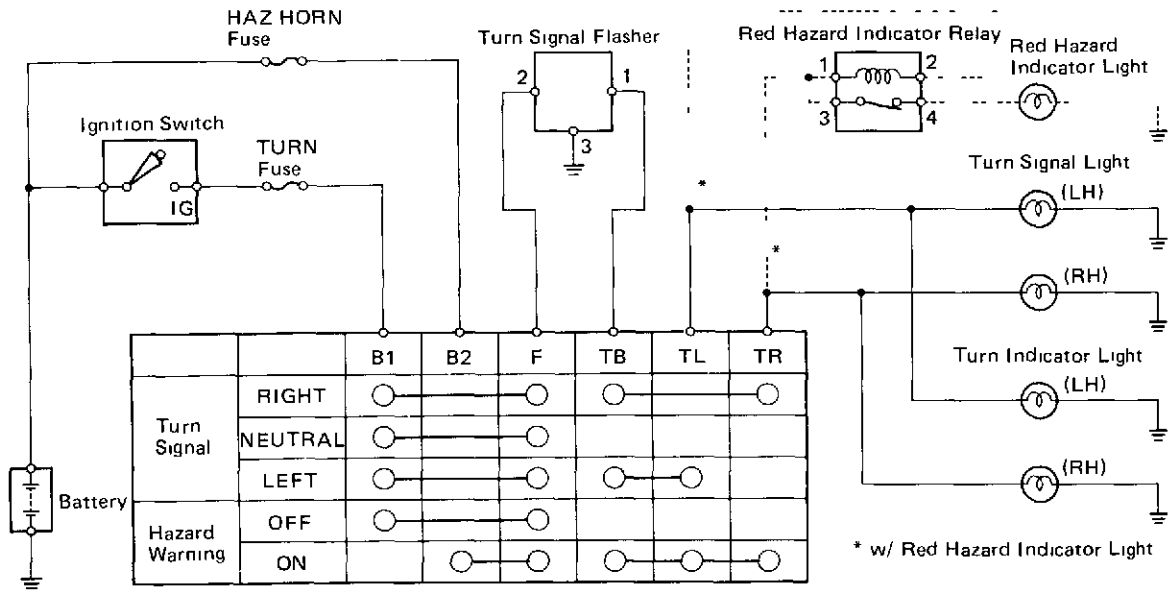

The POWER SOURCE CIRCUIT has been simplified For full details, see pages BE-10, 11, 12.

- Turn Signal Switch
- Hazard Warning Switch

Connector "A" Connector "B"

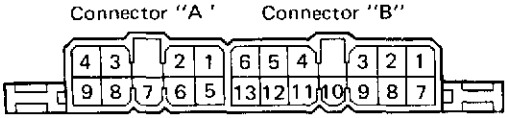

Turn Signal Flasher

12 V Vehicles

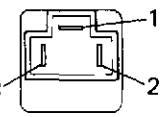

24 V Vehicles

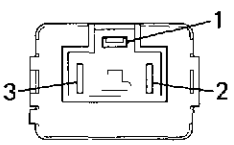

Red Hazard
Indicator Relay

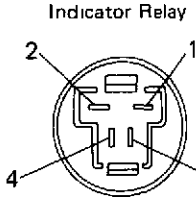

BE0111 BE2896 BE5340

Lights-On Warning System

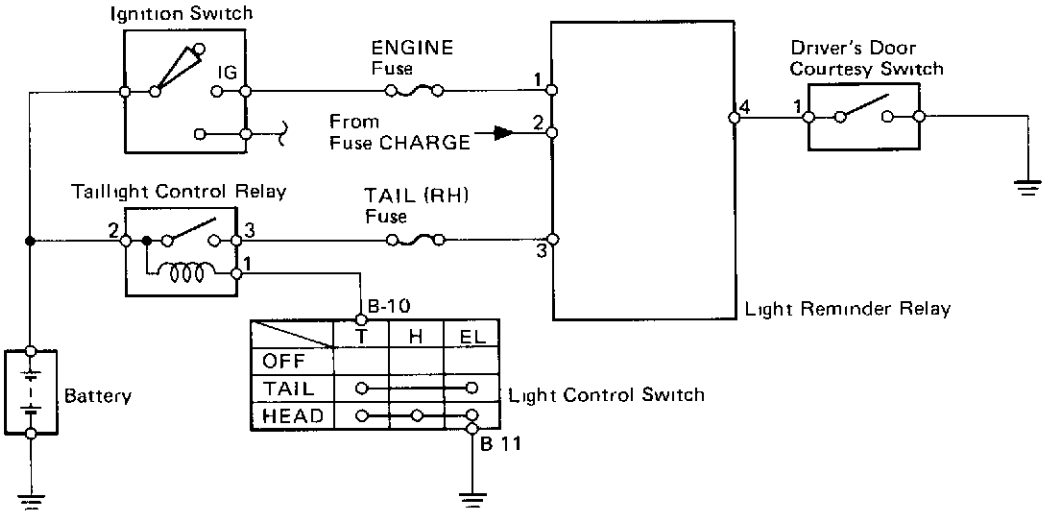

The POWER SOURCE CIRCUIT has been simplified For full details, see pages BE-10, 11, 12.

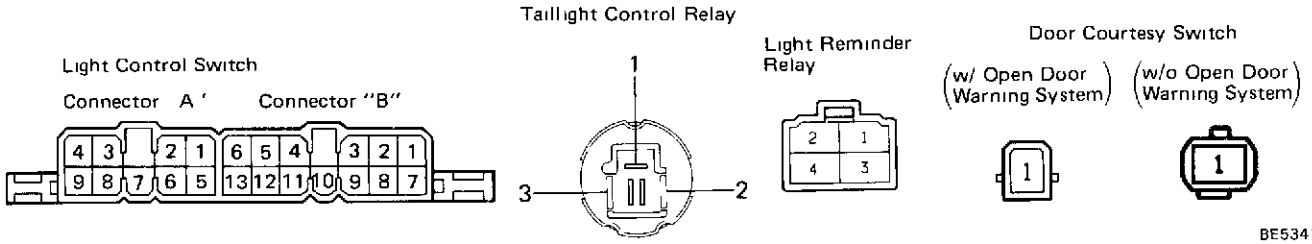

BE5341
BE0111 BE2763 H 4 2 GA 1 1 S 1 1 B

*1 TAIL (LH) Fuse or *2 TAIL (RH) Fuse

Headlight Beam Level Control System

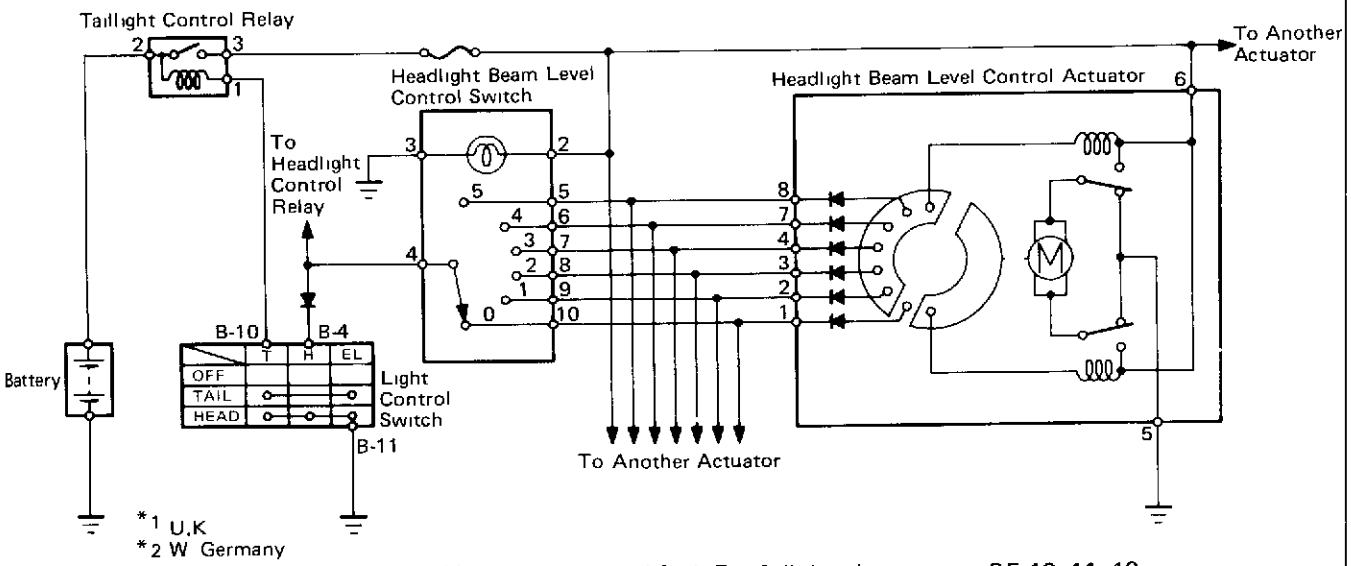

*1 U.K
*2 W Germany

The POWER SOURCE CIRCUIT has been simplified For full details, see pages BE-10, 11, 12

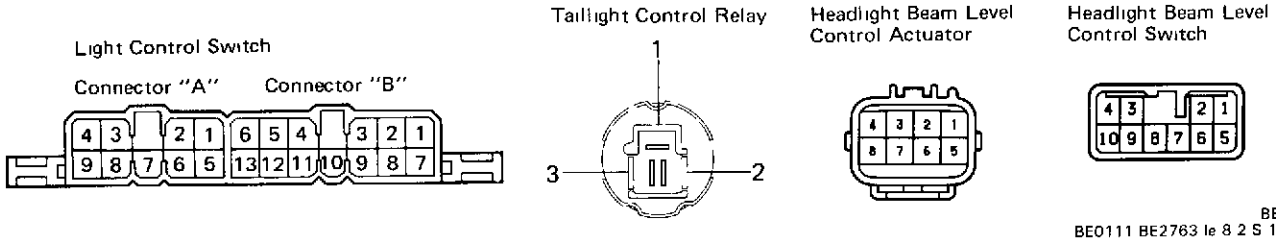

BE5342
BE0111 BE2763 le 8 2 S 10 2 A

Part Adjustment

Adjustment of Light Aiming

Light-Duty Vehicles

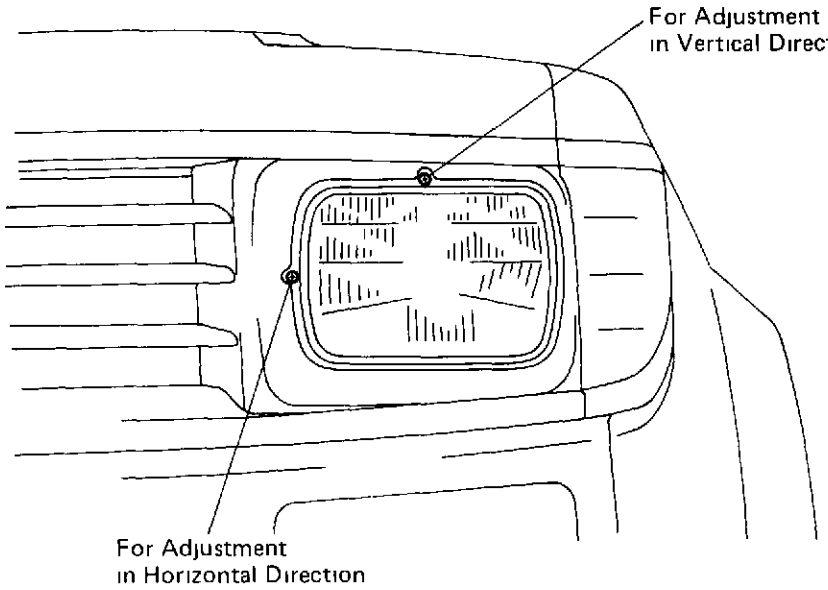

Heavy-Duty Vehicles

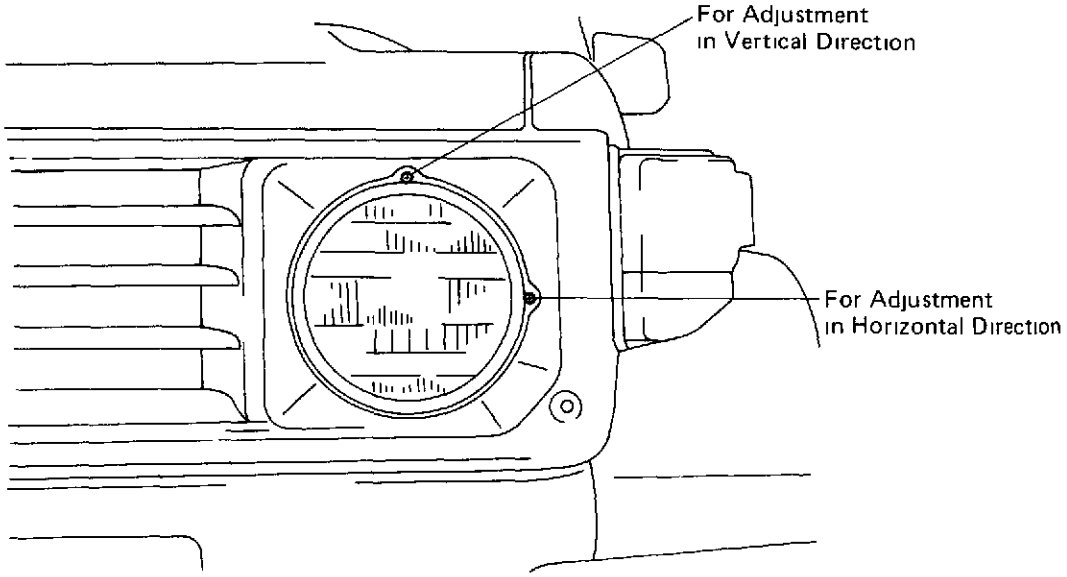

HINT: Before adjusting headlights equipped with a
light beam level control system, first return the headl
to standard position by moving the control switch to

Troubleshooting

Problem	Possible cause	Remedy	Page
Only one light comes ON	Light bulb burned out	Replace bulb	
	HEAD fuse blown	Replace fuse and check for short	BE-4
	Socket, wire or ground faulty		
Headlights do not light	Fusible link blown	Replace fusible link	
	HEAD fuse blown	Replace fuse and check for short	BE-4
	Headlight control relay faulty	Check relay	BE-29
	Light control/dimmer switch faulty	Check switch	BE-29
	Headlight dimmer relay faulty (Europe)	Check relay	BE-30
	Wiring or ground faulty	Repair as necessary	
High beam headlights or headlight flashers do not operate	Light control/dimmer switch faulty	Check switch	BE-29
	HEAD (UPR) fuse blown (Europe)	Replace fuse and check for short	BE-4
	Headlight dimmer relay faulty (Europe)	Check relay	BE-30
	Wiring faulty	Repair as necessary	
Tail, parking and license light do not light	Fusible link blown	Replace fusible link	
	TAIL fuse blown	Replace fuse and check for short	BE-4
	Taillight control relay faulty	Check relay	BE-30
	Light control switch faulty	Check switch	
	Wiring or ground faulty		
Stop lights do not light	STOP fuse blown	Replace fuse and check for short	BE-4
	Stop light switch faulty	Adjust or replace switch	
	Wiring or ground faulty	Replace as necessary	
Stop lights stay on	Stop light switch faulty	Adjust or replace switch	
Daytime running light system does not operate	DOME fuse blown	Replace fuse and check for short	BE-4
	ENGINE fuse blown		
	TAIL fuse blown		
	Taillight control relay faulty	Check relay	BE 30
	Headlight control relay faulty	Check relay	BE-29
	Daytime running light relay faulty	Check relay	BE-30
	Headlight dimmer relay faulty	Check relay	BE-30
	Ignition switch faulty	Check switch	BE-15
	Light control/dimmer switch faulty	Check switch	BE-29
	Wiring or ground faulty	Repair as necessary	
Front fog light system does not operate	TAIL fuse blown	Replace fuse and check for short	BE-4
	Taillight control relay faulty	Check relay	BE-30
	Front fog light switch faulty	Check switch	BE-31
	Light control switch faulty	Check switch	BE-29
	Wiring or ground faulty	Repair as necessary	
Rear fog light system does not operate	DOME fuse blown	Replace fuse and check for short	BE-4
	TAIL fuse blown (w/Daytime running light system)		
	Rear fog light relay faulty	Check relay	BE-31
	Taillight control relay faulty (w/ Daytime running light system)	Check relay	BE-30
	Daytime running light relay faulty (w/ Daytime running light system)	Check relay	BE-30
	Rear fog light switch faulty	Check switch	BE-31
	Light control switch faulty	Check switch	BE-29
	Wiring or ground faulty		

Troubleshooting (Cont'd)

Problem	Possible cause	Remedy	Page
Turn signal does not flash on one side	Turn signal switch faulty Wiring or ground faulty	Check switch Repair as necessary	BE-29
Turn signals do not operate	TURN fuse blown Turn signal flasher faulty Turn signal switch faulty Wiring or ground faulty	Replace fuse and check for short Check flasher Check switch Repair as necessary	BE-4 BE-32 BE-29
Hazard warning lights do not operate	HAZ-HORN fuse blown Turn signal flasher faulty Hazard warning switch faulty Wiring or ground faulty	Replace fuse and check for short Check flasher Check switch	BE-4 BE 32 BE-29
Lights on warning system does not operate	ENGINE fuse blown CHARGE fuse blown TAIL (RH) fuse blown Taillight control relay faulty Light reminder relay faulty Ignition switch faulty Light control switch faulty Driver's door courtesy switch faulty Wiring or ground faulty	Replace fuse and check for short Check relay Check relay Check switch Check switch Check switch	BE-4 BE-30 BE 33 BE-15 BE-29 BE-33
Headlight beam level control system does not operate	TAIL fuse blown Taillight control relay faulty Headlight beam level control switch faulty Headlight beam level control actuator faulty	Replace fuse and check for short Check relay Check switch Check actuator	BE-4 BE-30 BE 34 BE-34

Parts Replacement

Components

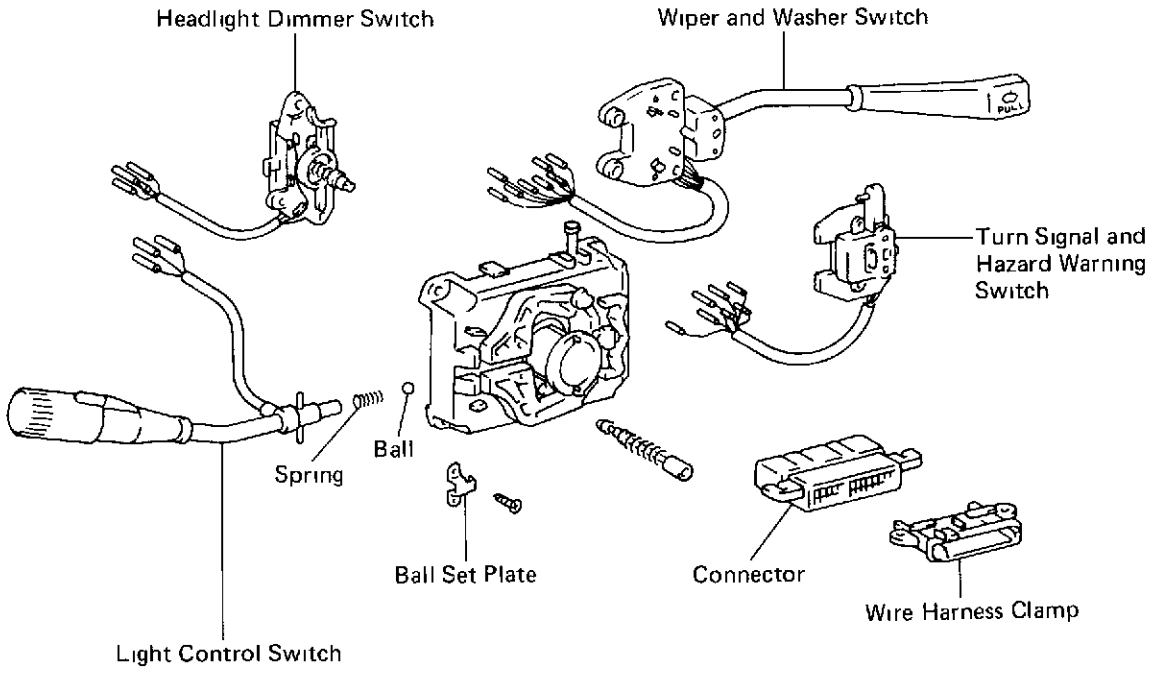

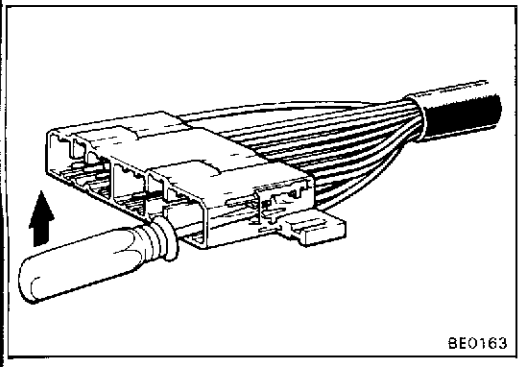

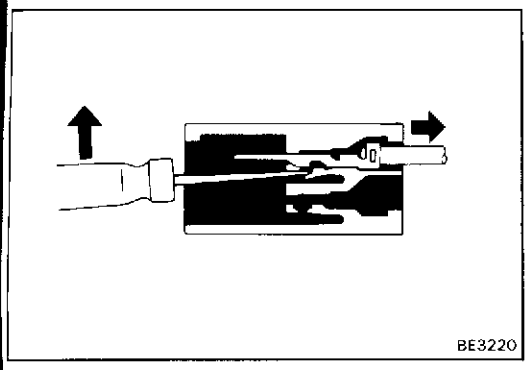

Disassembly of Combination Switch

1. REMOVE TERMINALS FROM CONNECTOR

(a) From the open end, insert a miniature screwdriver between the locking lugs and terminal.

(b) Pry down the locking lugs with the screwdriver and pull the terminal out from the rear.

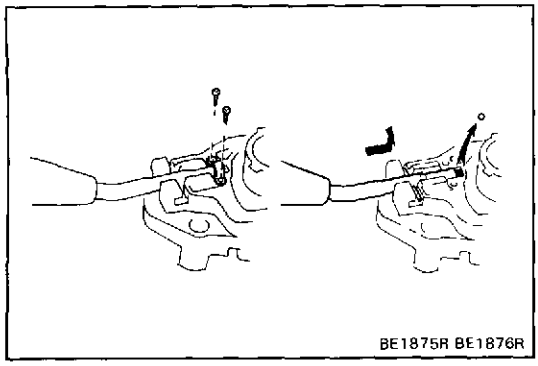
BE1875R BE1876R

2. **REMOVE LIGHT CONTROL SWITCH**

(a) Remove two screws and the ball set plate from the switch body.

(b) Remove the ball and slide out the switch from the switch body with the spring.

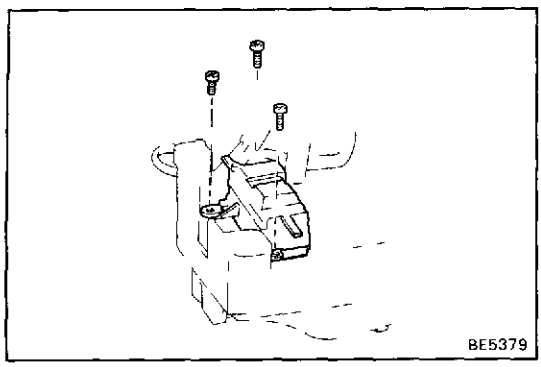
BE5379

3. **REMOVE HEADLIGHT DIMMER SWITCH**

Remove three screws and the switch from the switch body

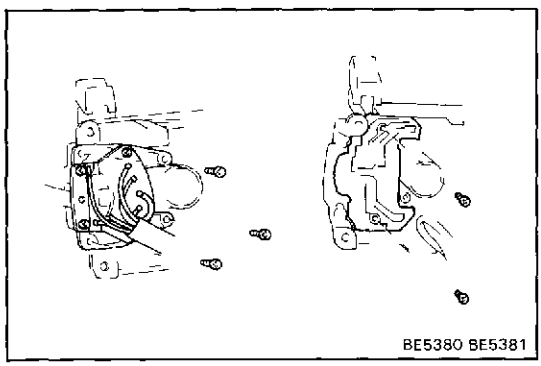
BE5380 BE5381

4. **REMOVE WIPER AND WASHER SWITCH**

Remove three screws and the switch from the switch body.

5. **REMOVE TURN SIGNAL AND HAZARD WARNING SWITCH**

Remove two screws and the switch from the switch body

Assembly of Combination Switch

INSTALL PARTS OF COMBINATION SWITCH IN REVERS SEQUENCE OF REMOVAL

HINT.

- After installing the switch to the switch body, insert th the switch operates in smoothly.

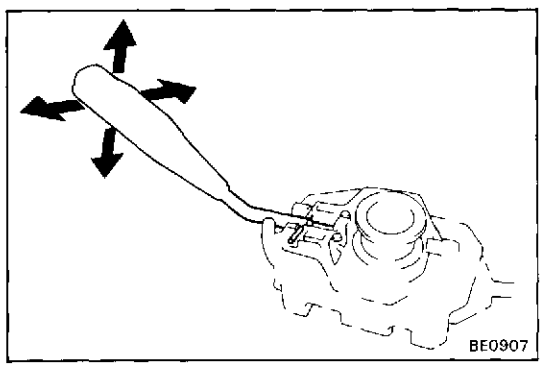
BE0907

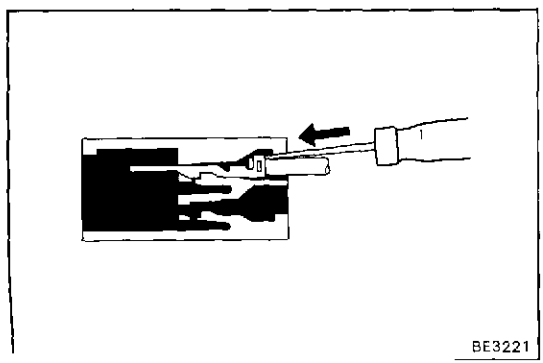
BE3221

- Push in the terminal until it is securely locked in t connector lug.
- Pull on the wire to confirm that it is securely locke

System Description

Daytime Running Light System

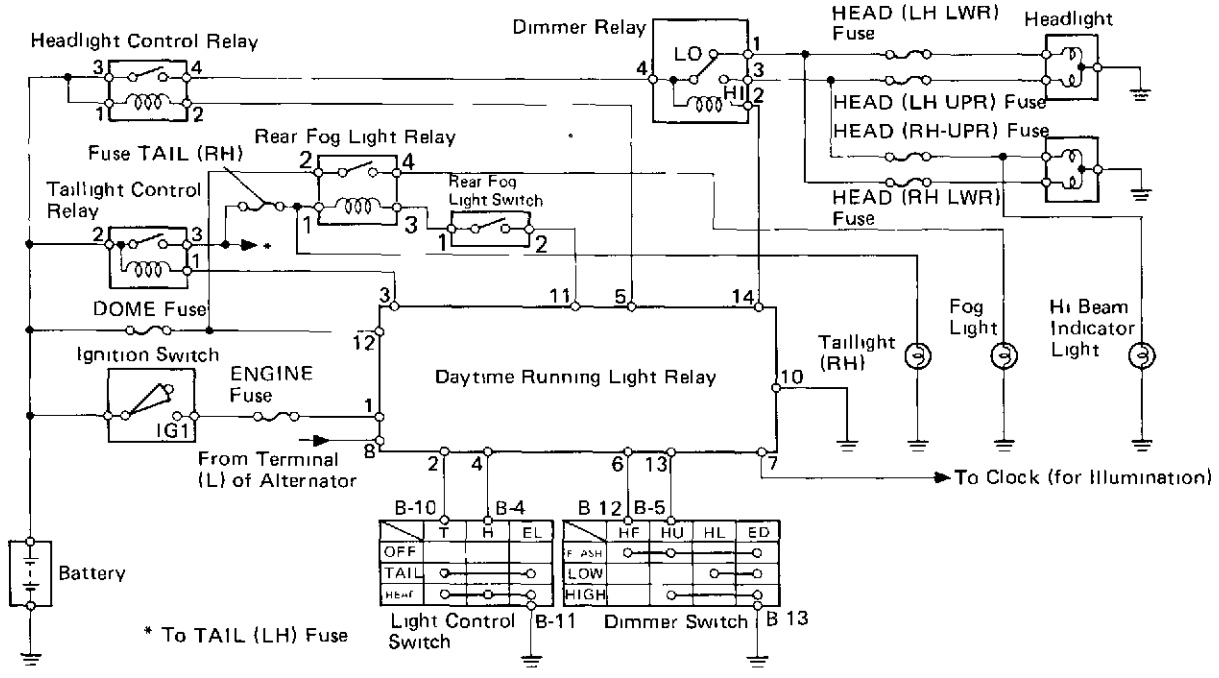

The POWER SOURCE CIRCUIT has been simplified For full details, see pages BE-10, 11, 12

BE5335

Standby Operation

- Current flows from the battery to terminal 12 of the Daytime Running Light Relay.
- When the engine is started, alternator voltage is applied from terminal L of the alternator to terminal 8 of the Daytime Running Light Relay.

Operation

1. **IGNITION SWITCH "ON" AND LIGHT CONTROL SWITCH "OFF"**
   When the switches are set, current flows from the battery to terminal 1 of the Daytime Running Light Relay. Also, because continuity is made between terminal 3 of the Daytime Running Light Relay and ground, and terminal 5 of the Daytime Running Light Relay and ground, the Taillight Control Relay and Headlight Control Relay are turned on. Then the taillights and headlights light up.
   HINT Because terminal 14 of the Daytime Running Light Relay is not grounded at all times, the Headlight Dimmer Relay is off, so the headlights light up at low beam
2. **IGNITION SWITCH "ON" AND LIGHT CONTROL SWITCH AT "TAIL"**
   When the switches are set, continuity is made between terminal 2 of the Daytime Running Light Relay and ground. Also, because continuity is made between terminal 3 of the Daytime Running Light Relay and ground at all times, the taillights light up.
   (Fog Light) Also, because continuity is made between terminal 11 of the Daytime Running Light Relay and ground, the Rear Fog Light Relay is turned on Then the fog lights light up on standby.
3. **IGNITION SWITCH "ON" AND LIGHT CONTROL SWITCH AT "HEAD"**
   When the switches are set, continuity is made between terminal 4 of the Daytime Running Light Relay and ground, and terminal 2 of the Daytime Running Light Relay and ground Also, because continuity is made between terminal 5 of the Daytime Running Light Relay and ground, and terminal 3 of the Daytime Running Light Relay and ground at all times, the taillights and headlights light up.
   HINT: When the Headlight Dimmer Switch is set to "HIGH", continuity is made between terminal 13 of the Daytime Running Light Relay and ground. Also, because continuity is made between terminal 14 of the Daytime Running Light Relay and ground, the Headlight Dimmer Relay is turned on. Then the headlights go on at high beam.
4. **HEADLIGHT DIMMER SWITCH AT "FLASH"**
   When the switch is set, continuity is made between terminal 6 of the Daytime Running Light Relay and ground, and terminal 13 of the Daytime Running Light Relay and ground. Also, because the continuity is made between terminal 5 of the Daytime Running Light Relay and ground, and terminal 14 of the Daytime Running Light Relay and ground, the headlights flash

Headlight Beam Level Control System

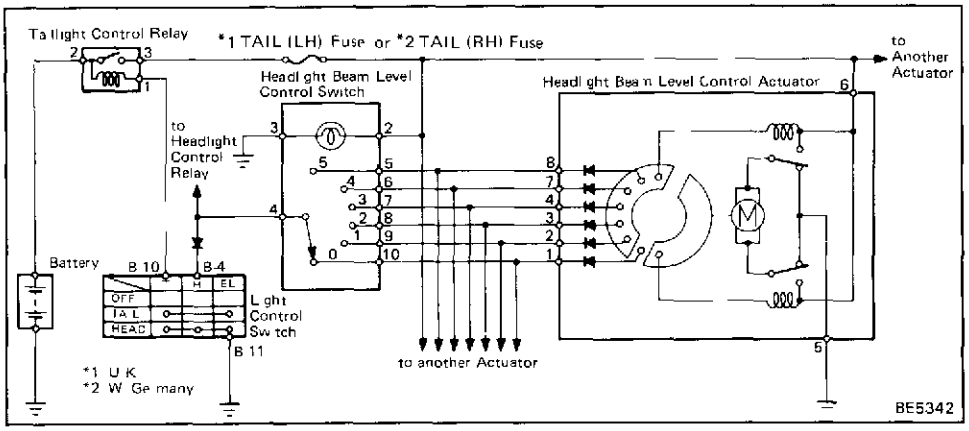

- Continuity always exists between terminal 5 of the Headlight Beam Level Control Actuator (hereafter called "Actuator") and the ground.
- When the Light Control Switch is turned to HEAD position, continuity is made between terminal 4 of the Headlight Beam Level Control Switch (hereafter called "Level Switch") and the ground through terminals B-4 and B-11 of the Light Control Switch Also, continuity is made between terminal 1 of the Taillight Control Relay and the ground through terminals B-10 and B-11 of the Light Control Switch, the Taillight Control Relay is turned on, then current flows from the battery to terminal 6 of the Actuator.

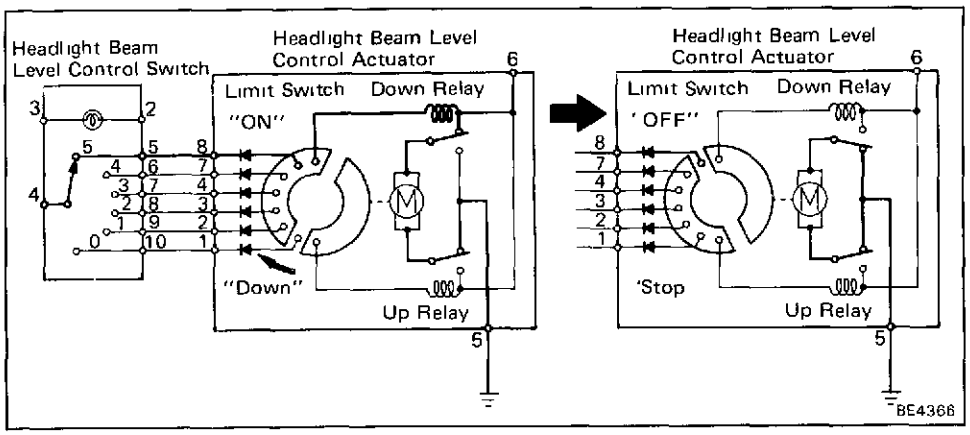

LEVEL SWITCH IN "5" POSITION

When the switch is set, Current flows from terminal 6 of Actuator → terminal 8 of the Actuator → terminal 5 of the Level Switch → ground, and the Down Relay is activated. Then current flows from terminal 6 of the Actuator → Down Relay → Motor → Up Relay → terminal 5 of the Actuator → ground, and the Motor operates to lower the headlight.

When the headlights are lowered, the Limit Switch operates, so that continuity between terminals 6 and 8 of the Actuator is broken As a result, the Down Relay is open and the headlights stay in level "5" position.

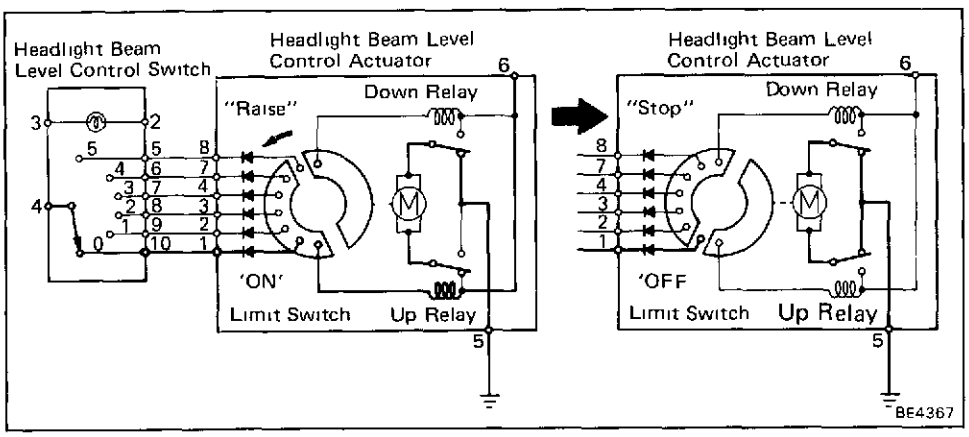

LEVEL SWITCH IN "0" POSITION

When the switch is set, current flows from terminal 6 of Actuator → terminal 1 of the Actuator → terminal 10 of the Level Switch → ground, and the Up Relay is activated. The current flows from terminal 6 of the Actuator → Up Relay → Motor → Down Relay → terminal 5 of the Actuator → ground, and the motor operates to raise the headlight.

When the headlights are raised, the Limit switch operates, so that continuity between terminals 6 and 8 of the Actuator is broken. As a result, the Up Relay is open and the headlights stay in level "0" position.

Reference. LHD Vehicles

Light Control, Headlight Dimmer and Turn Signal Switch

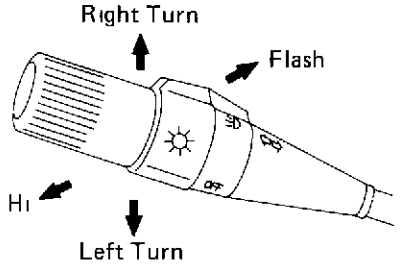

Hazard Warning Switch

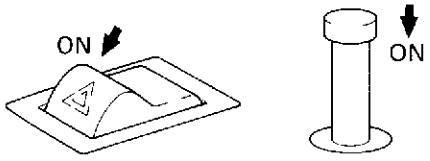

Connector "A" Connector "B"

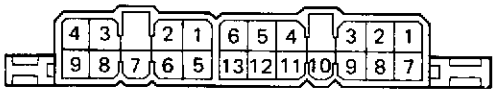

Reference. For RHD vehicles, the switch is always symmetrically opposite to LHD vehicles

BE5345
BE5346
BE0111

Parts Inspection

Headlight and Taillight System

1. **INSPECT COMBINATION SWITCH**

(Light Control Switch/Continuity)

Terminal (Color) / Switch position	B 4 (R)	B-10 (W)	B-11 (W)
OFF			
TAIL		○	○
HEAD	○	○	○

(Headlight Dimmer Switch/Continuity)

Terminal (Color) / Switch position	B-5 (R Y)	B-6 (R-G)	B-12 (R-W)	B-13 (W-B)
Flash	○		○	○
Low beam		○		○
High beam	○			○

(Turn Signal Switch/Continuity)

Terminal (Color) / Switch position	B-2 (G-L)	B-3 (G-W)	B-7 (G)	B 8 (G-Y)	B 9 (G-B)
Left turn	○	○	○		○
Neutral	○		○		
Right turn	○	○	○	○	

(Hazard Warning Switch/Continuity)

Terminal (Color) / Switch position	B 1 (G-O)	B-2 (G-L)	B 3 (G-W)	B-7 (G)	B-8 (G-Y)	B-9 (G-B)
OFF		○		○		
ON	○		○	○	○	○

If continuity is not as specified, replace the switch.

2. **INSPECT RELAYS**

(Headlight Control Relay/Continuity)

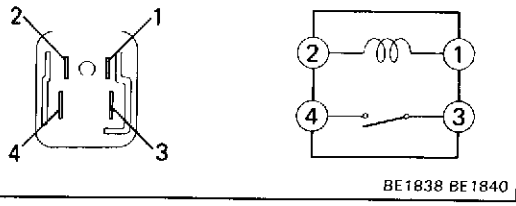

BE1838 BE1840

Terminal / Condition	1	2	3	4
Constant	○	○		
Apply battery voltage to terminals 1 and 2.			○	○

(Taillight Control Relay/Continuity)

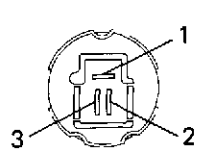

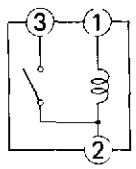

BE2763 BE2505

Terminal / Condition	1	2	3
Constant	○—∿∿—○		
Apply battery voltage to terminals 1 and 2		○—○	

(Headlight Dimmer Relay/Continuity)

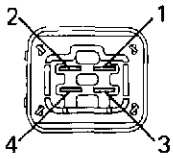

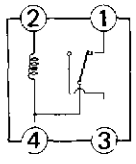

BE1839 BE1842

Terminal / Condition	1	2	3	4
Constant	○	○—∿∿—○		○
Apply battery voltage to terminals 2 and 4.		○	○	○

If continuity is not as specified, replace the relay.

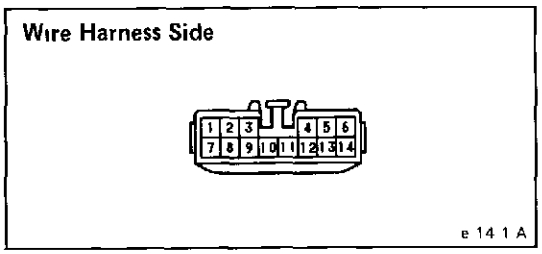

Daytime Running Light System

Inspect Daytime Running Light Relay

(Relay Circuit)

Disconnect the connector from the relay and inspect the connector on the wire harness side as shown in the chart.

Check for	Tester connection	Condition		Specified value
Continuity	2 — Ground	Light control switch position	OFF	No continuity
			TAIL or HEAD	Continuity
	4 — Ground	Light control switch position	OFF or TAIL	No continuity
			HEAD	Continuity
	6 — Ground	Headlight dimmer switch position	Low beam or High beam	No continuity
			Flash	Continuity
	7 — Ground 10 — Ground	Constant		Continuity
	13 — Ground	Headlight dimmer switch position	Low beam	No continuity
			High beam or Flash	Continuity
Voltage	1 — Ground	Ignition switch position	LOCK or ACC	No voltage
			ON	Battery voltage
	3 — Ground 5 — Ground	Constant		Battery voltage
	8 — Ground	Engine	Stop	No voltage
			Running	Battery voltage
	11 — Ground	Constant		No voltage
		Ground terminal 3		Battery voltage
	12 — Ground	Constant		Battery voltage
	14 — Ground	Constant		No voltage
		Ground terminal 5		Battery voltage

If circuit is as specified, inspect relay operation on

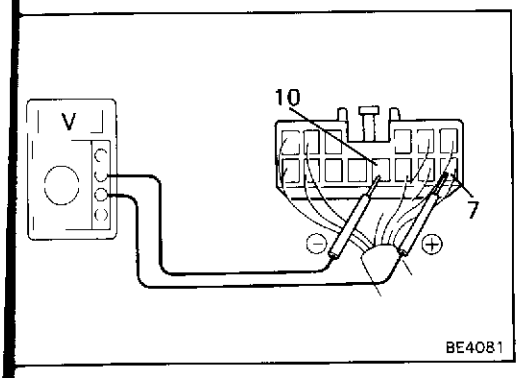

(Relay Operation)

(a) Connect the positive (+) lead from the voltmeter to terminal 7 and negative (−) lead to terminal 10.

(b) Check that there is battery voltage with light control switch is turned on

If operation is not as specified, replace the relay

Front Fog Light System

INSPECT FRONT FOG LIGHT SWITCH (Continuity)

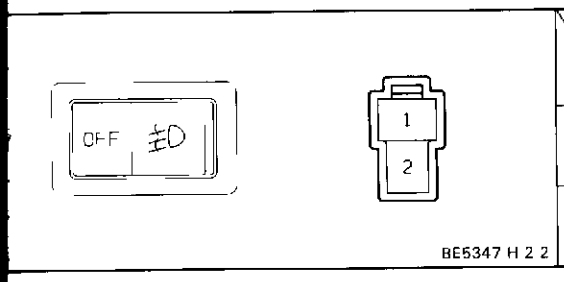

Terminal / Switch position	1	2
OFF		
ON	○—	—○

If continuity is not as specified, replace the switch.

Rear Fog Light System

1. INSPECT REAR FOG LIGHT SWITCH (Continuity)

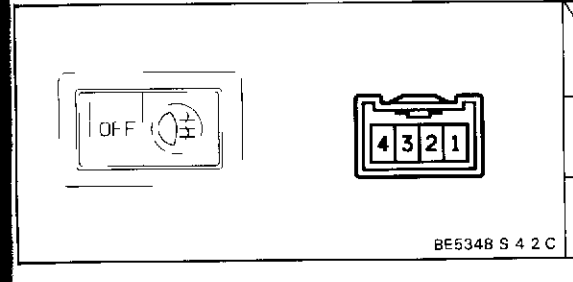

Terminal / Switch position	1	2	3	4
OFF			○—◉—	—○
ON	○—	—○	○—◉—	—○

If continuity is not as specified, replace the switch.

2. INSPECT REAR FOG LIGHT RELAY (Continuity)

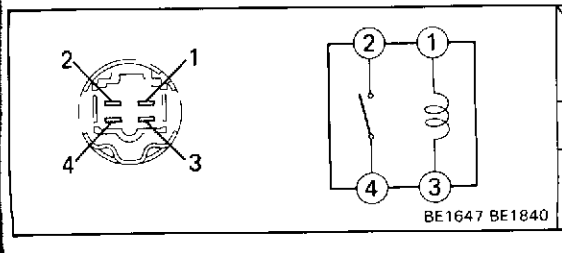

Terminal / Condition	1	2	3	4
Constant	○—	—ꝏ—	—○	
Apply battery voltage to terminals 1 and 3		○—	——	—○

If continuity is not as specified, replace the relay

Turn Signal and Hazard Warning System

1. INSPECT SWITCHS

(Turn Signal Switch/Continuity)

See Combination Switch on page BE-29.

(Hazard Warning Switch/Continuity)

See Combination Switch on page BE-29

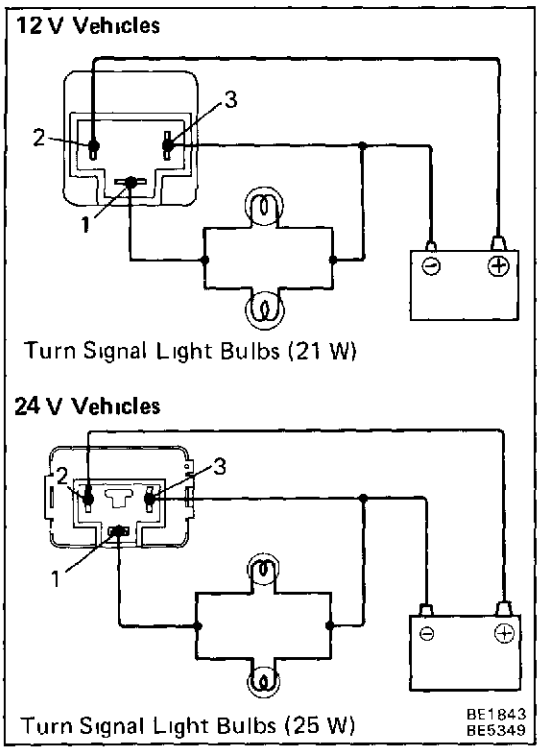

2. INSPECT TURN SIGNAL FLASHER (Operation)

HINT: The number in brackets ( ) applies to 24V vehicles.

(a) Connect the positive (+) lead from the battery to terminal 2 and the negative (—) lead to terminal 3.

(b) Connect the two turn signal light bulbs parallel to each other to terminals 1 and 3, check that the bulbs flash.

HINT: The number in brackets ( ) applies to 24 V vehicles.

If one of the front or rear turn signal bulbs has an open circuit, flash rate will be more than 140 (120) times per minute.

If operation is not as specified, replace the flasher.

3. INSPECT RED HAZARD INDICATOR RELAY (Continuity)

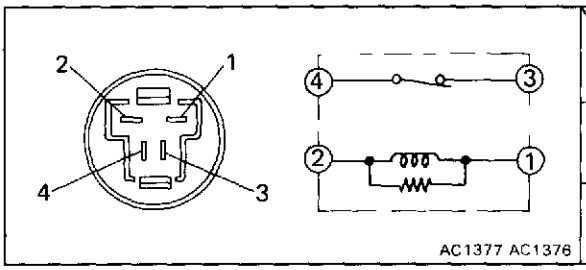

Terminal / Condition	1	2	3	4
Constant				
Apply battery voltage to terminals 1 and 2.			No continuity	

If continuity is not as specified, replace the switch.

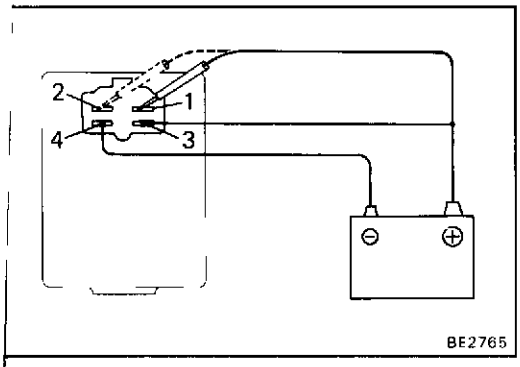

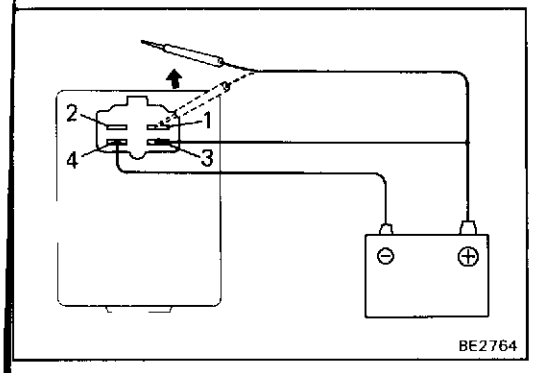

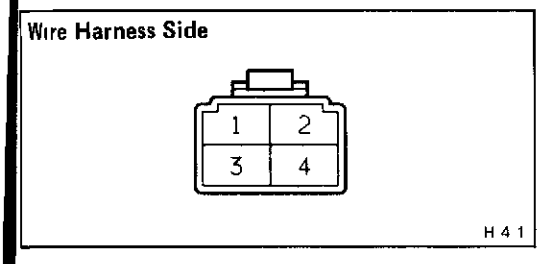

Lights-On Warning System

1. INSPECT LIGHT REMAINDER RELAY (Operation)

(a) Connect the positive (+) lead from the battery to terminal 3 and the negative (−) lead to terminal 4.

(b) Check that the buzzer does not sound when connected terminal 1 or 2 from the positive (+) lead.

(c) Check that the buzzer sounds when disconnecting terminal 1 or 2 from the positive (+) lead.

If operation is not as specified, replace the relay

(Relay Circuit)

Disconnect the connector from the relay and inspect the connector on the wire harness side as shown in the chart.

Check for	Tester connection	Condition		Specified value
Continuity	4 — Ground	Driver's door position	Closed (Courtesy switch OFF)	No continuity
			Opened (Courtesy switch ON)	Continuity
Voltage	1 — Ground	Ignition switch position	LOCK or ACC	No voltage
			ON	Battery voltage
	2 — Ground	Engine	Stop	No voltage
			Running	Battery voltage
	3 — Ground	Light Control Switch	OFF	No voltage
			TAIL or HEAD	Battery voltage

If circuit is as specified, replace the relay.

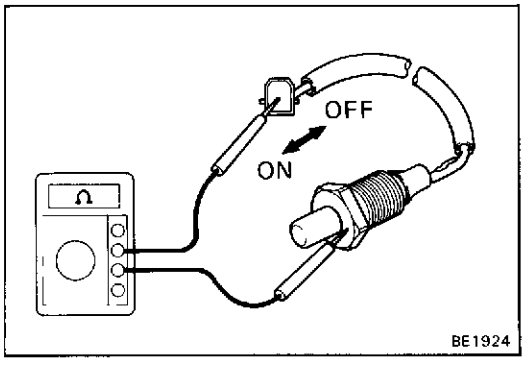

2. INSPECT DRIVER'S DOOR COURTESY SWITCH (w/o Open Door Warning System)

(a) Check that there is continuity between terminal and the switch body with the switch ON (switch pin released).

(b) Check that there is no continuity between terminal and the switch body with the switch OFF (switch pin pushed in).

If operation is not as specified, replace the switch.

(w/ Open Door Warning System)

See Open Door Warning System on page BE-25

Headlight Beam Level Control System

1. INSPECT SWITCH (Continuity)

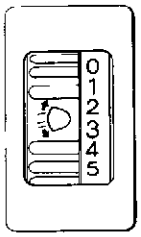

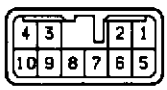

BE4369 S 10 2 A

Terminal / Switch position	4	5	6	7	8	9	10	Illumination 2	Illumination 3
"0"	○						○		
"1"	○					○			
"2"	○				○				
"3"	○			○					
"4"	○		○						
"5"	○	○							

If continuity is not as specified, replace the switch.

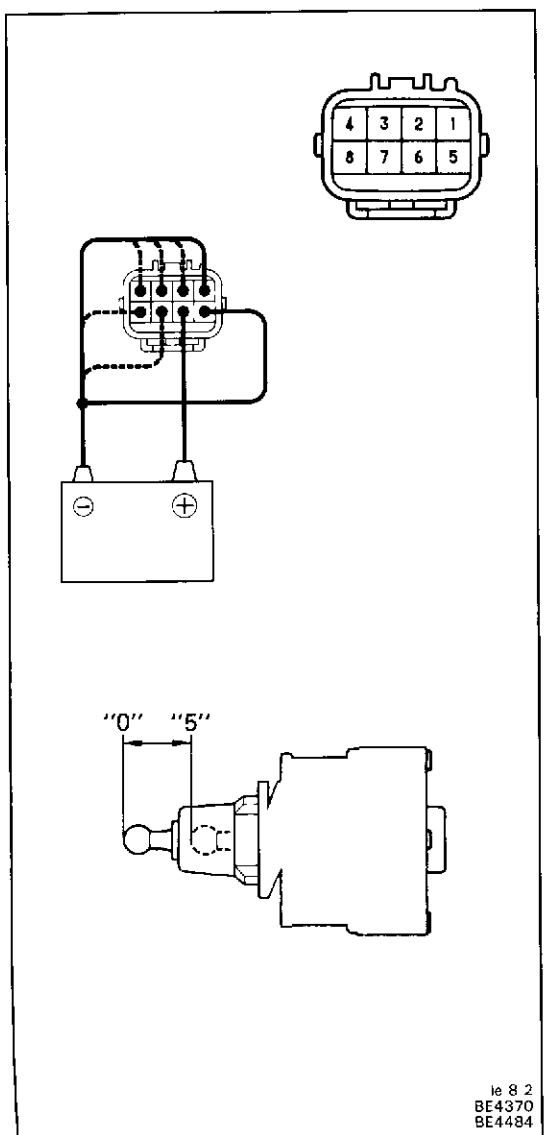

2. INSPECT ACTUATOR

(a) Connect the positive (+) lead from the battery to terminal 6 and the negative (—) lead to terminal 5

(b) Ground each terminal and check that each mode operates as shown in the chart and illustration.

Terminal	Headlight Beam Level
1 — ground	"0"
2 — ground	"1"
3 — ground	"2"
4 — ground	"3"
7 — ground	"4"
8 — ground	"5"

If operation is not as specified, replace the actuator

le 8 2
BE4370
BE4484

HEADLIGHT CLEANER SYSTEM

Parts Location

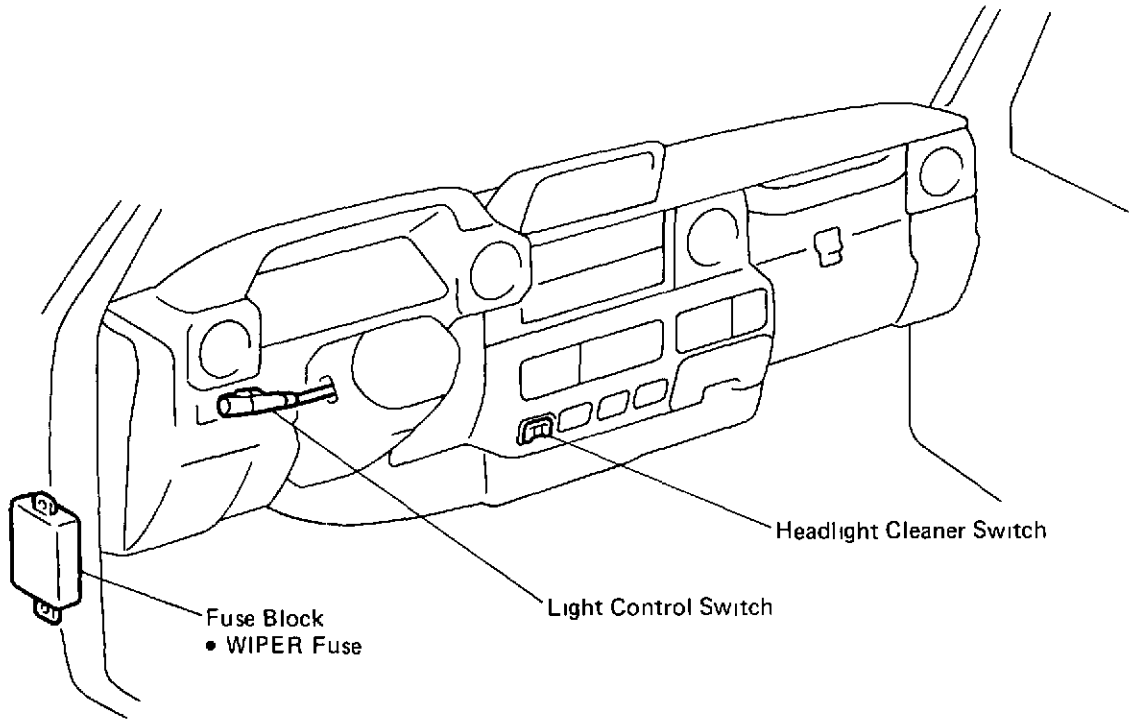

Heavy-Duty

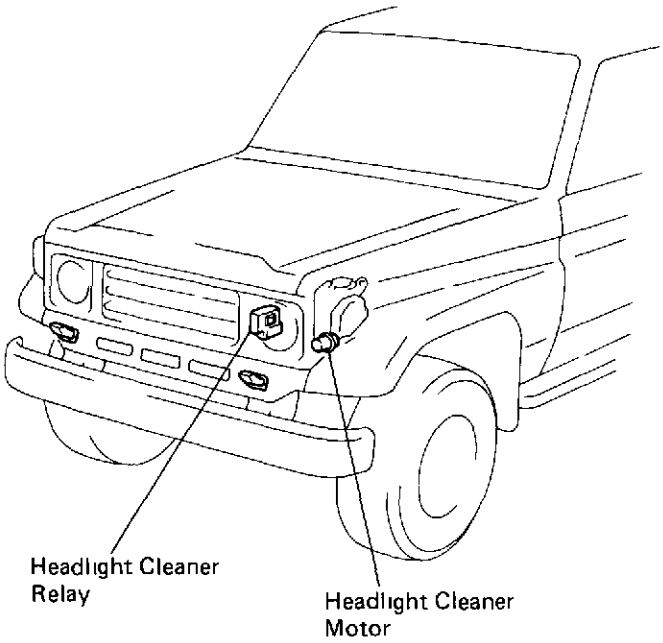

Light-Duty

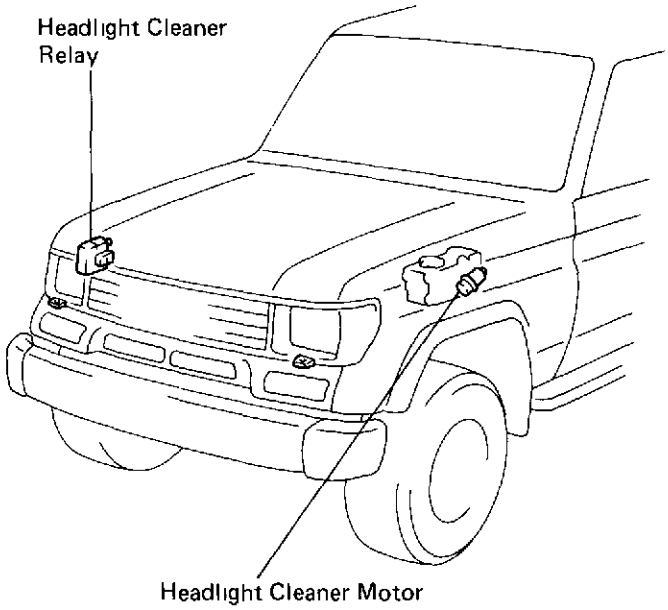

BE5297
BE5299 BE5302

Headlight Beam Level Control System

1. INSPECT SWITCH (Continuity)

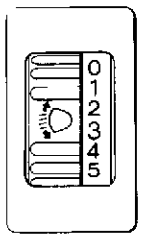

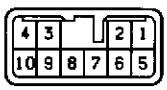

BE4369 S 10 2 A

Terminal / Switch position	4	5	6	7	8	9	10	Illumination 2	Illumination 3
"0"	○						○		
"1"	○					○			
"2"	○				○				
"3"	○			○					
"4"	○		○						
"5"	○	○							

If continuity is not as specified, replace the switch.

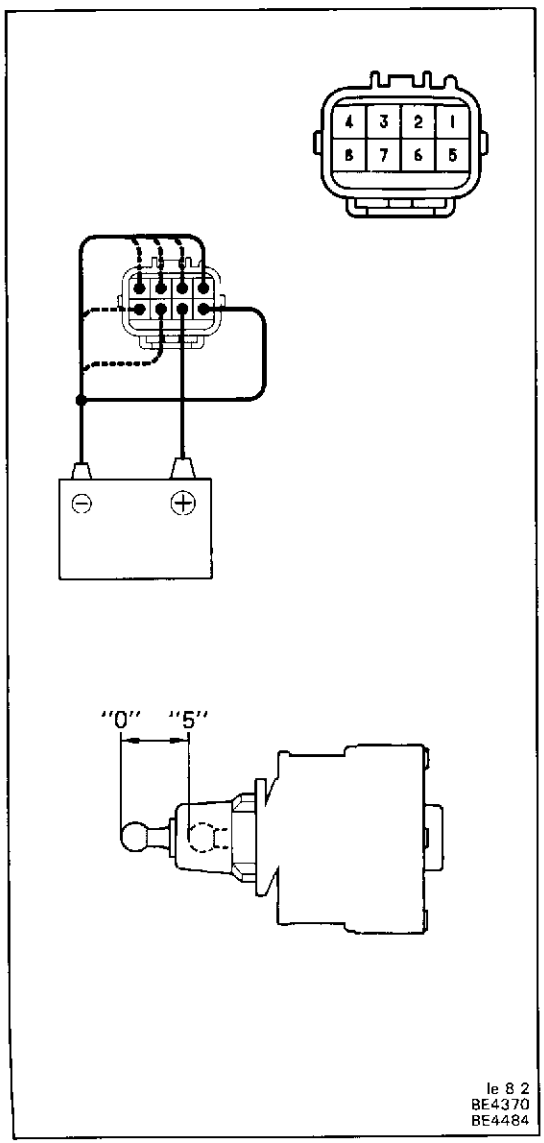

2. INSPECT ACTUATOR

(a) Connect the positive (+) lead from the battery to terminal 6 and the negative (—) lead to terminal 5.

(b) Ground each terminal and check that each mode operates as shown in the chart and illustration.

Terminal	Headlight Beam Level
1 — ground	"0"
2 — ground	"1"
3 — ground	"2"
4 — ground	"3"
7 — ground	"4"
8 — ground	"5"

If operation is not as specified, replace the actuator

le 8 2
BE4370
BE4484

Wiring and Connector Diagrams

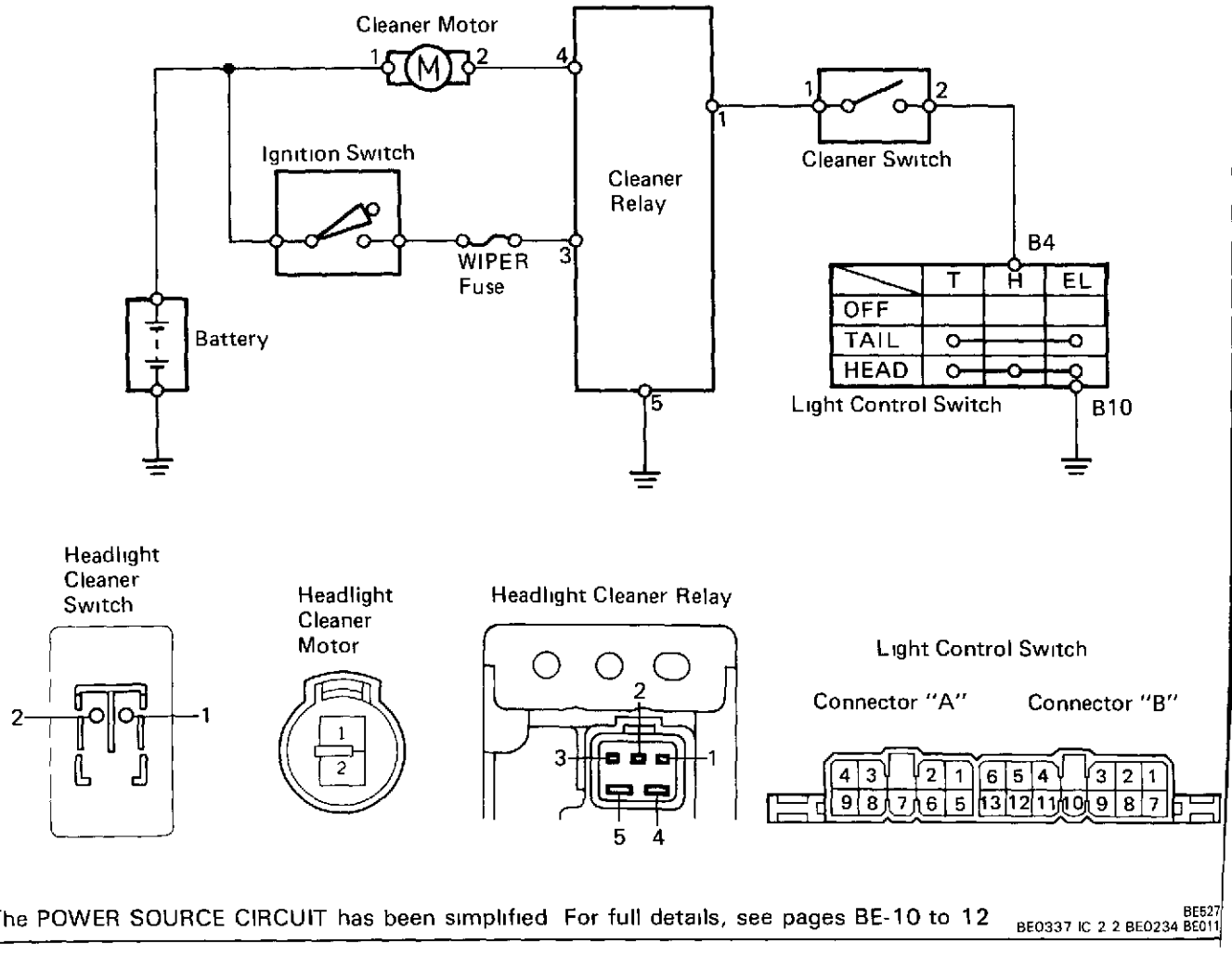

The POWER SOURCE CIRCUIT has been simplified For full details, see pages BE-10 to 12

BE527
BE0337 IC 2 2 BE0234 BE011

Troubleshooting

Problem	Possible cause	Remedy	Page
Headlight cleaner do not operate	WIPER fuse blown	Replace fuse and check for short	BE-4
	Cleaner hose or nozzle clogged	Repair as necessary	
	Cleaner motor faulty	Check motor	BE-37
	Cleaner switch faulty	Check switch	BE-37
	Cleaner relay	Check relay	BE-37
	Wiring or ground faulty	Repair as necessary	

Parts Inspection

1. INSPECT SWITCH (Continuity)

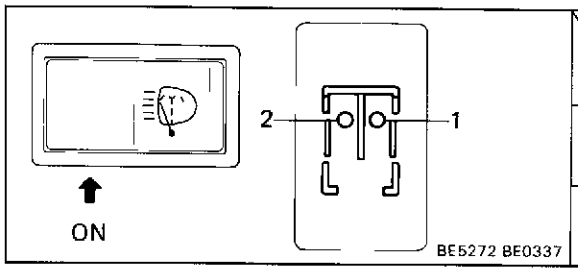

Terminal / Switch position	1	2
OFF		
ON	○	○

If continuity is not as specified, replace the switch.

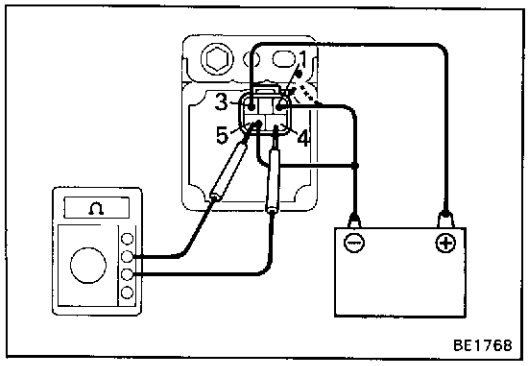

2. INSPECT HEADLIGHT CLEANER RELAY

(a) Check that there is no continuity between terminals 4 and 5.

(b) Connect the positive (+) lead from the battery to terminal 3 and the negative (−) lead to terminal 5.

(c) Connect the negative (−) lead from the battery to terminal 1, check that there is continuity between terminals 4 and 5 for 0.30 — 0.42 sec., then there is no continuity.

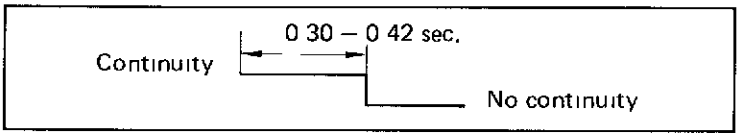

If operation is not as specified, replace the relay.

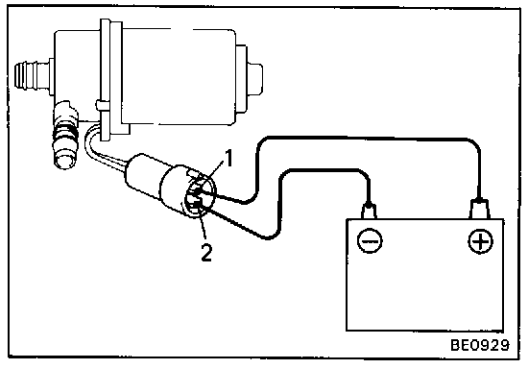

3. INSPECT HEADLIGHT CLEANER MOTOR

Connect the positive (+) lead from the battery to terminal 1 and the negative (−) lead to terminal 2, check that the motor operates.

NOTICE: These test must be performed quickly (within 3 — 5 seconds) to prevent the coil from burning out.

If operation is not as specified, replace the motor

WIPER AND WASHER SYSTEM

Parts Location

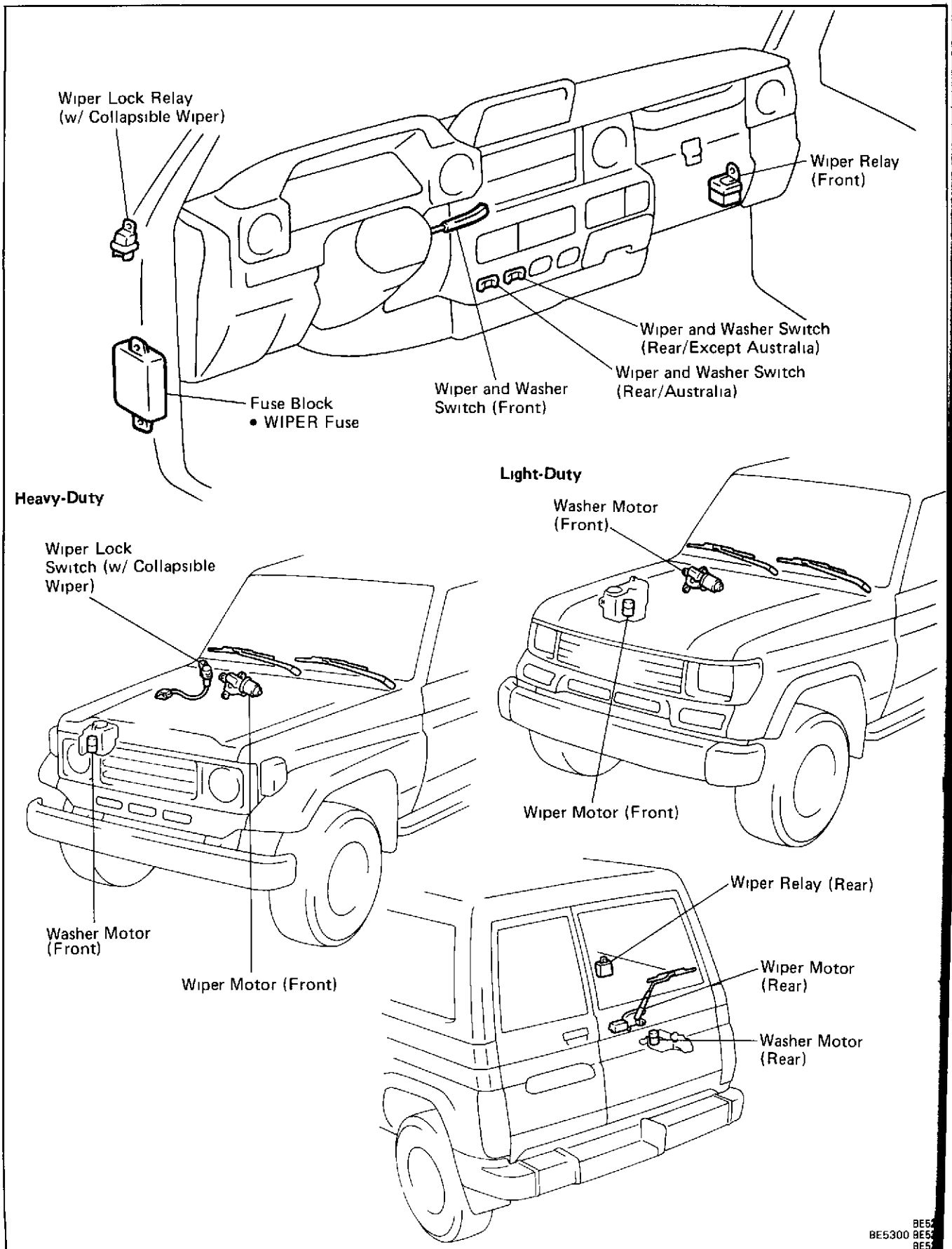

Wiring and Connector Diagrams

(Front: Mist Type)

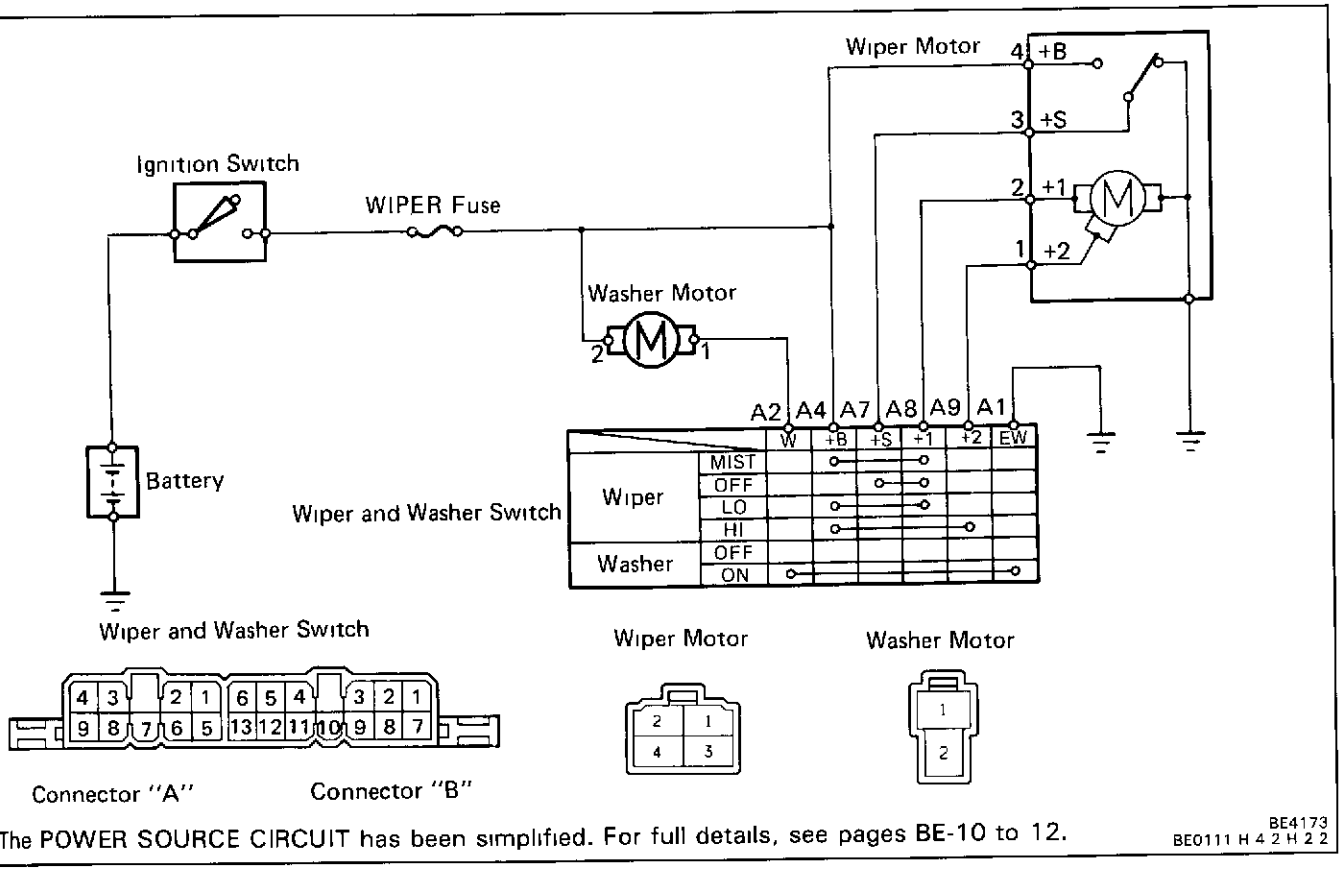

The POWER SOURCE CIRCUIT has been simplified. For full details, see pages BE-10 to 12.

BE4173
BE0111 H 4 2 H 2 2

(Front: Intermittent Type w/ Washer Linked)

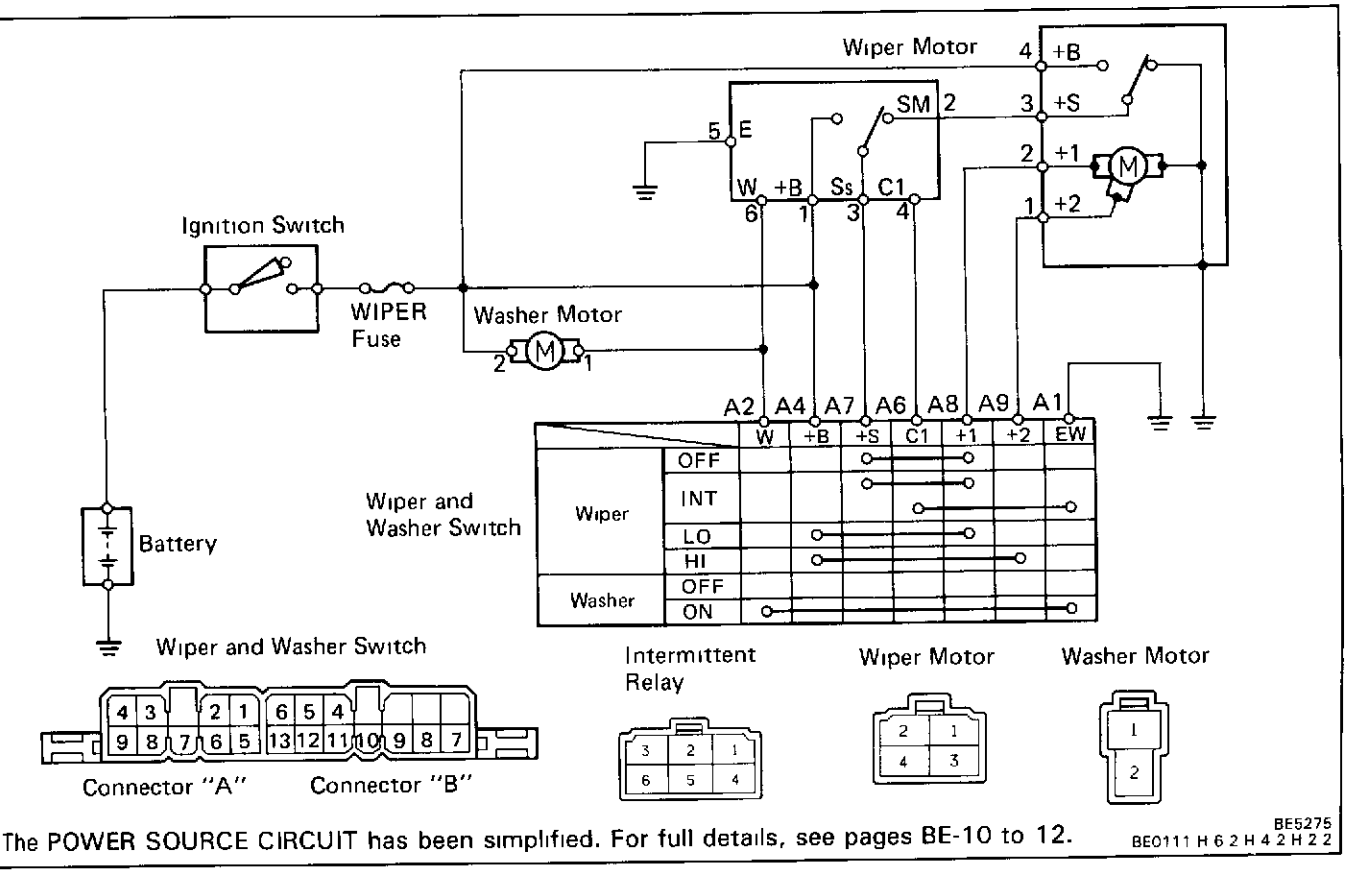

The POWER SOURCE CIRCUIT has been simplified. For full details, see pages BE-10 to 12.

BE5275
BE0111 H 6 2 H 4 2 H 2 2

(Front: Intermittent w/o Washer Linked)

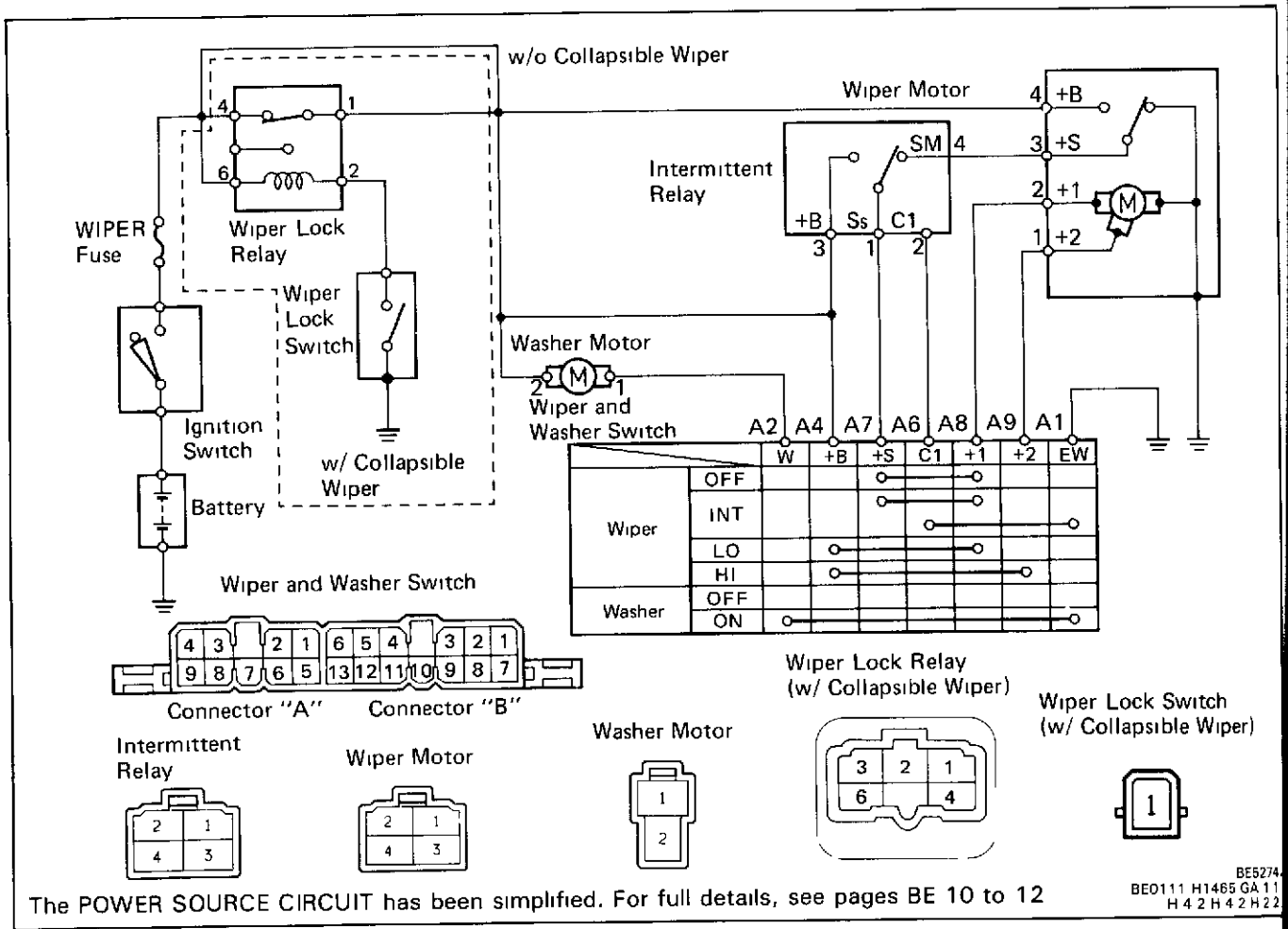

The POWER SOURCE CIRCUIT has been simplified. For full details, see pages BE 10 to 12

BE5274
BE0111 H1465 GA 11
H 4 2 H 4 2 H 2 2

(Rear)

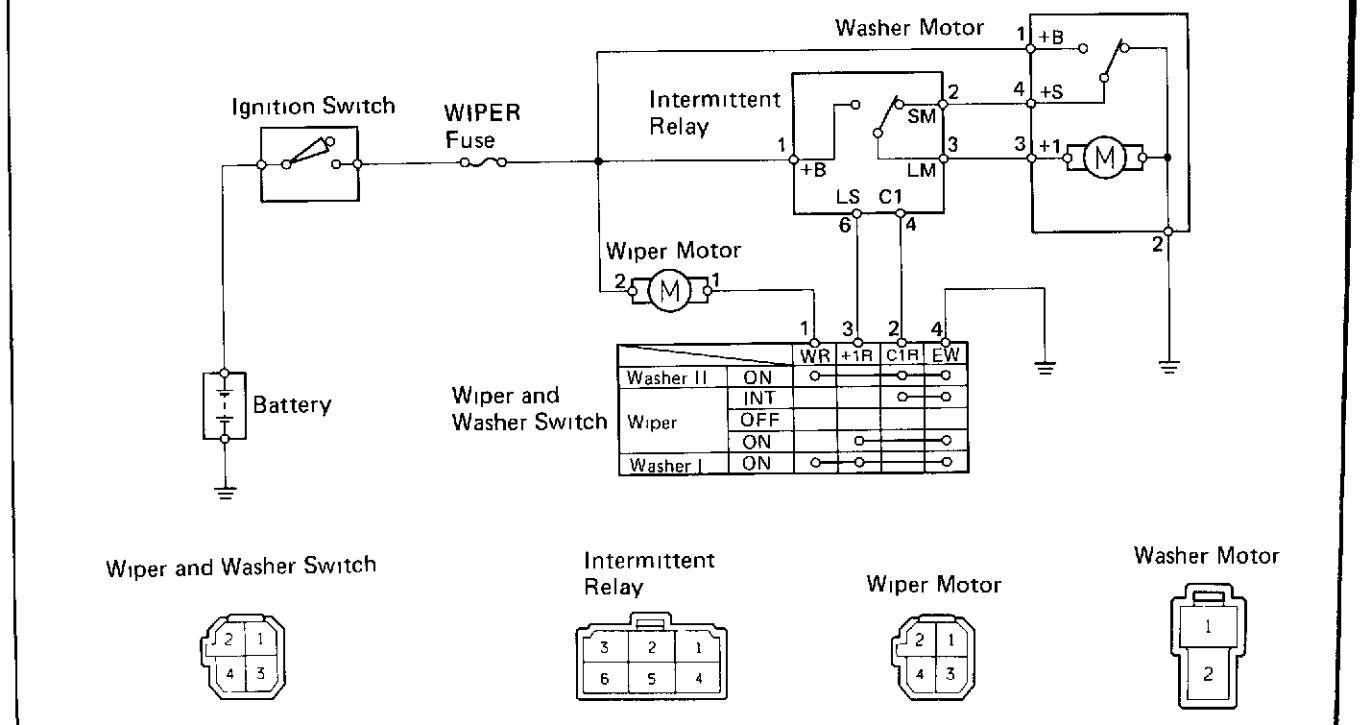

The POWER SOURCE CIRCUIT has been simplified For full details, see pages BE-10 to 12

BE
GA 4 2 H 6 2 GA 4 2 H

Troubleshooting

Problem	Possible cause	Remedy	Page	
			Front	Rear
Wiper do not operate or return to off position	WIPER fuse blown	Replace fuse and check for short	BE-4	BE-4
	Wiper motor faulty	Check motor	BE-45	BE-45
	Wiper switch faulty	Check switch	BE-41	BE-42
	Wiring or ground faulty	Repair as necessary		
Wiper do not operate in Mist position	Wiper switch faulty	Check switch	BE-41	BE-42
	Wiper motor faulty	Check motor	BE-45	BE-45
	Wiring or ground faulty	Repair as necessary		—
Wiper do not operate in Intermittent (INT) position	Wiper relay faulty	Check relay	BE-42	BE-44
	Wiper switch faulty	Check switch	BE-41	BE-42
	Wiper motor faulty	Check motor	BE-45	BE-45
	Wiring or ground faulty	Repair as necessary		
Washer do not operate	Washer hose or nozzle clogged	Repair as necessary		
	Washer motor faulty	Check motor	BE-46	BE-46
	Washer switch faulty	Check switch	BE-41	BE-42
	Wiring or ground faulty	Repair as necessary		

Reference: LHD Vehicles

w/ Mist Wiper

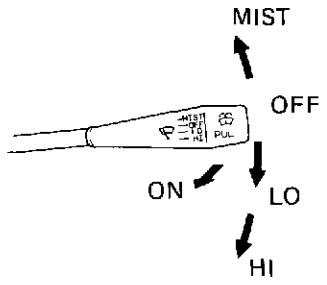

w/ Intermittent Wiper

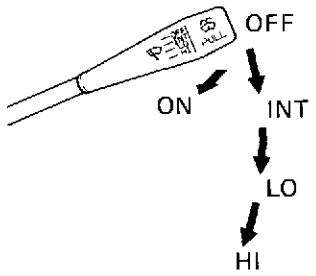

Connector "A" Connector "B"

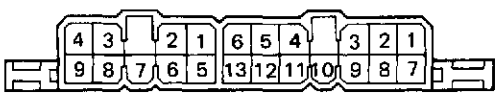

Reference: For RHD vehicles, the switches are always symmetrically opposite to those of LHD vehicles.

BE5276
BE5277
BE0111

Parts Replacement

See Parts Replacement of Combination Switch on page BE-25.

Parts Inspection

Wiper System

1. **INSPECT SWITCHES**

(Front Wiper and Washer Switch/Continuity)

w/ Mist Wiper

Terminal (Color) / Switch position		A1 (B)	A2 (L)	A4 (L W)	A7 (L R)	A8 (L B)	A9 (L O)
Wiper	MIST			○		○	
	OFF				○	○	
	LO			○		○	
	HI			○			○
Washer	OFF						
	ON	○	○				

w/ Intermittent Wiper

Terminal (Color) / Switch position		A1 (B)	A2 (L)	A4 (L W)	A7 (L R)	A8 (L B)	A9 (L O)
Wiper	OFF				○	○	
	INT				○	○	
	LO			○		○	
	HI			○			○
Washer	OFF						
	ON	○	○				

If continuity is not as specified, replace the switch

(Rear Wiper and Washer Switch/Continuity)

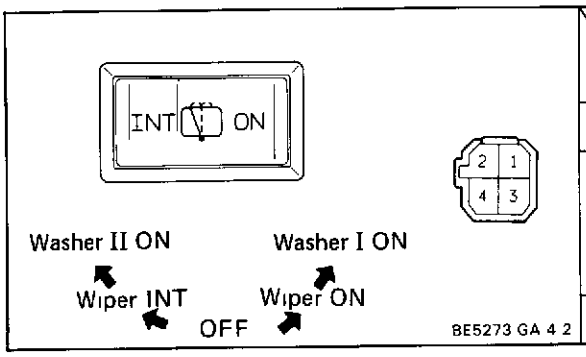

Terminal / Switch position		1	2	3	4
Washer I	ON	○		○	○
Wiper	ON			○	○
	OFF				
	INT		○		○
Washer II	ON	○	○		○

If continuity is not as specified, replace the switch.

(Wiper Lock Switch: w/ Collapsible Wiper)

(Continuity)

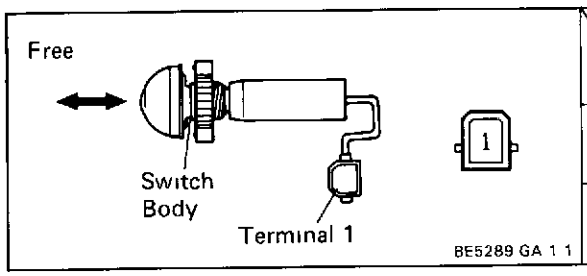

Terminal / Switch position	1	Switch body
Free (OFF)		
Push (ON)	○	○

If continuity is not as specified, replace the switch.

2. INSPECT RELAYS

(Front Wiper Relay: w/ Washer Linked)

(Continuity)

(a) Check that there is no continuity between terminals 1 and 3

(b) Check that there is continuity between terminals 2 and 3.

If continuity is not as specified, replace the relay.

(Operation at Intermittent)

(a) Connect the positive (+) lead from the battery to terminal 1 and the negative (−) lead to terminal 4, 2 and 5.

(b) Connect the positive (+) lead from the voltmeter to terminal 3 and the negative (−) lead to terminal 4

(c) Check that the voltage changes as shown in the table

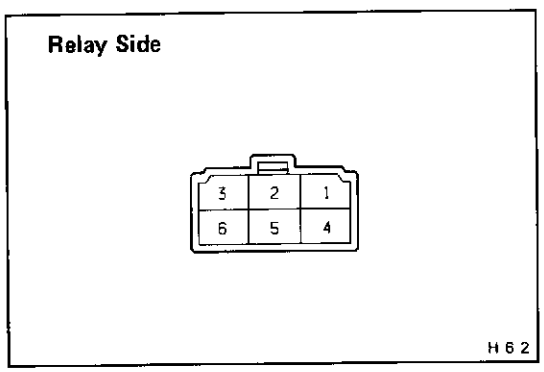

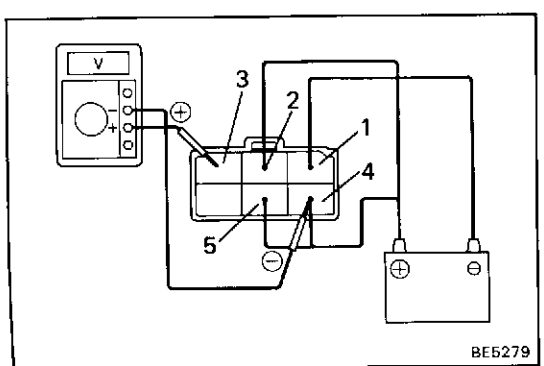

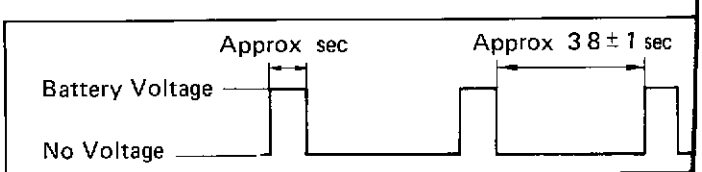

If operation is not as specified, replace the switch

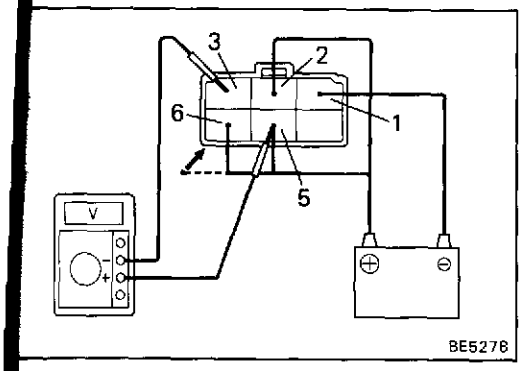

(Operation at Washer Linked)

(a) Connect the positive (+) lead from the battery to terminal 1 and the negative (−) lead to terminal 5 and 2.

(b) Connect the positive (+) lead from the voltmeter to terminal 3 and the negative (−) lead to terminal 5.

(c) Connect the negative (−) lead from the battery to terminal 6, check that the voltage changes soon to battery voltage from to voltage.

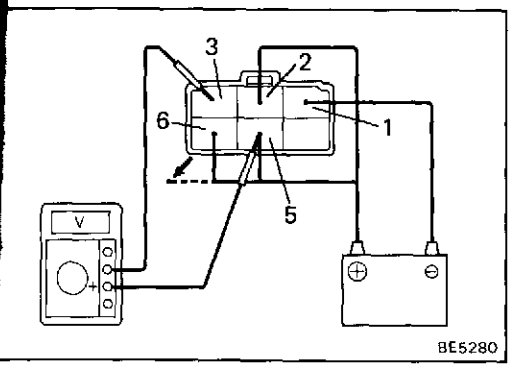

(d) Disconnect the negative (−) lead from terminal 6, check that the voltage changes to no voltage from battery voltage approximately 2.5 seconds later.

If operation is not as specified, replace the relay.

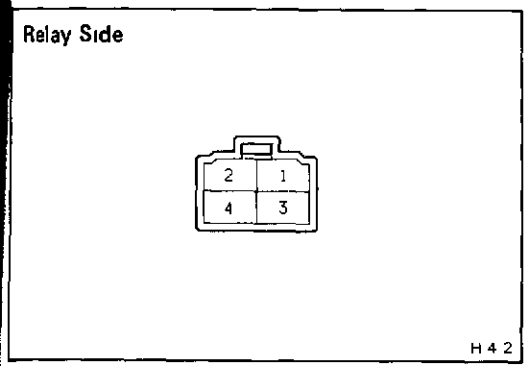

(Front Wiper Relay: w/o Washer Linked)

(Continuity)

(a) Check that there is no continuity between terminals 1 and 3.

(b) Check that there is continuity between terminals 1 and 4.

If continuity is not as specified, replace the relay.

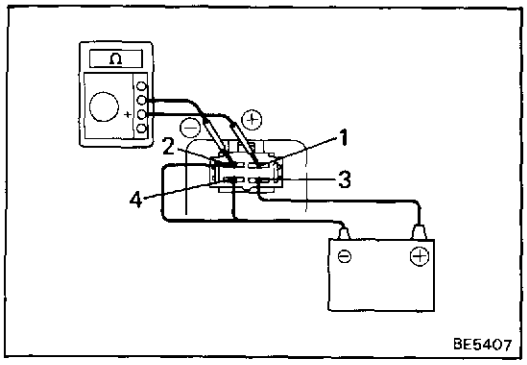

(Operation at Intermittent)

(a) Connect the positive (+) lead from the battery to terminal 3 and the negative (−) lead to terminal 2 and 4.

(b) Connect the positive (+) lead from the voltmeter to terminal 1 and the negative (−) lead to terminal 2.

(c) Check that the voltage changes as shown in the table.

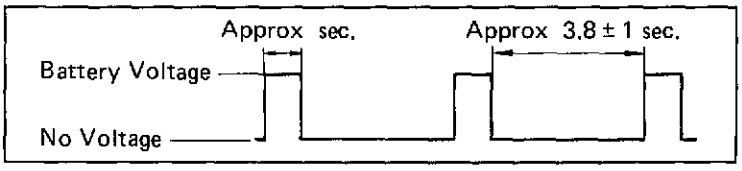

If operation is not as specified, replace the switch.

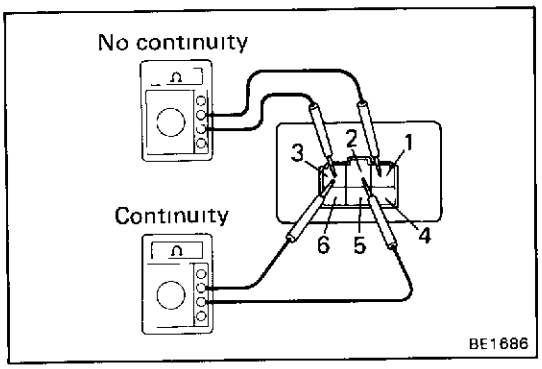

(Rear Wiper Relay)

(Continuity)

(a) Check that there is no continuity between terminals 1 and 3

(b) Check that there is continuity between terminals 2 and 3.

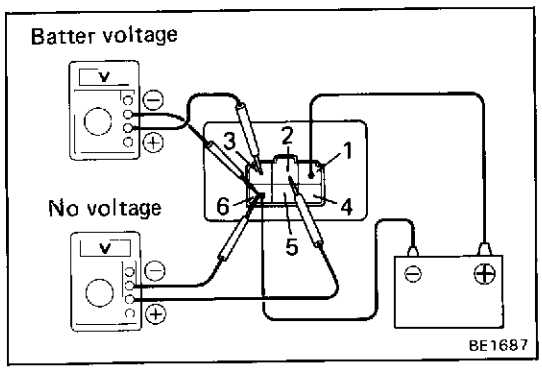

(Operation)

(c) Connect the positive (+) lead from the battery to terminal 1 and the negative (—) lead to terminal 6.

(d) Connect the positive (+) lead from the voltmeter to terminal 2 and the negative (—) lead to terminal 6, check that the meter needle indicates to 0 volts

(e) Connect the positive (+) lead from the voltmeter to terminal 3 and the negative (—) lead to terminal 6, check that the meter needle indicates to battery boltage.

If operation is not as specified, replace the relay.

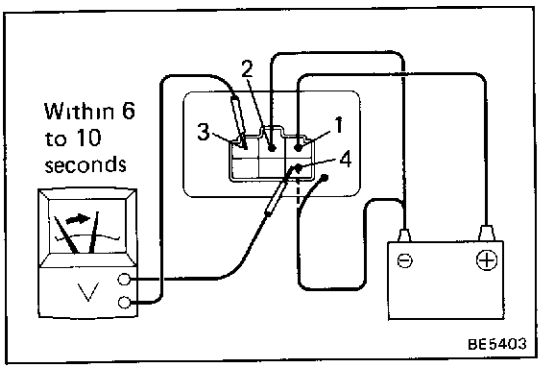

(Operation at Intermittent)

(a) Connect the positive (+) lead from the battery to terminal 1 and the negative (—) lead to terminal 2

(b) Connect the positive (+) lead from the voltmeter to terminal 3 and the negative (—) lead to terminal 4.

(c) After connecting the negative (—) lead from terminal 4, connect it to terminal 1, and then, check that the meter needle rises from 0 volts to battery voltage within 6 to 10 second.

If operation is not as specified, replace the relay.

(Wiper Lock Relay: w/ Collapsible Wiper)

(Continuity)

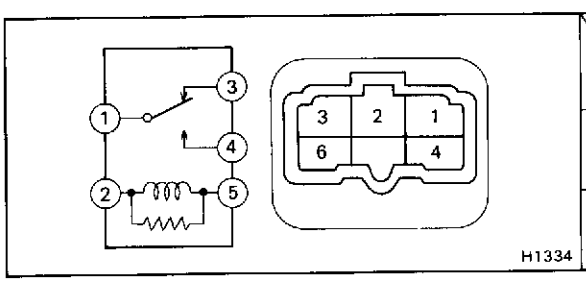

Terminal / Condition	1	2	3	4	6
Constant	○	○	○	○	○
Apply battery voltage to terminal 2 and 6	○			○	

If continuity is not as specified, replace the relay.

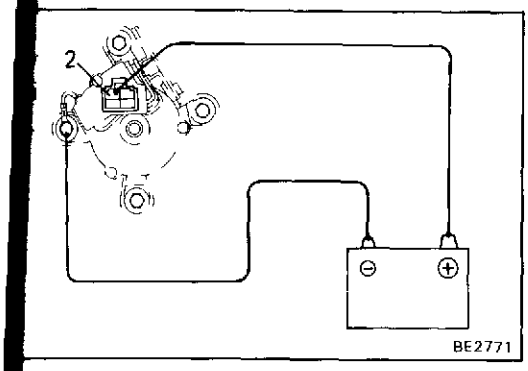

3. **INSPECT MOTOR**

(Front Motor/Operation at Low Speed)

Connect the positive (+) lead from the battery to terminal 2 and the negative (—) lead to the motor body, check that the motor operates as low speed.

If operation is not as specified, replace the motor.

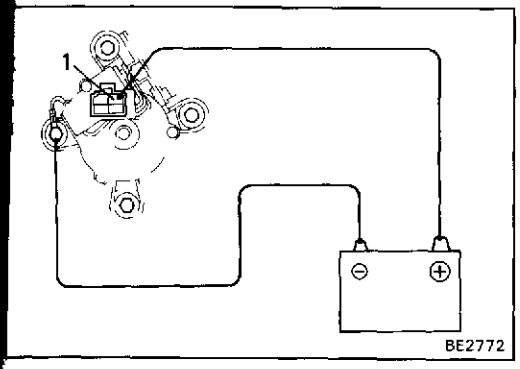

(Front Motor/Operation at High Speed)

Connect the positive (+) lead from the battery to terminal 1 and the negative (—) lead to the motor body, check that the motor operation at high speed.

If operation is not as specified, replace the motor.

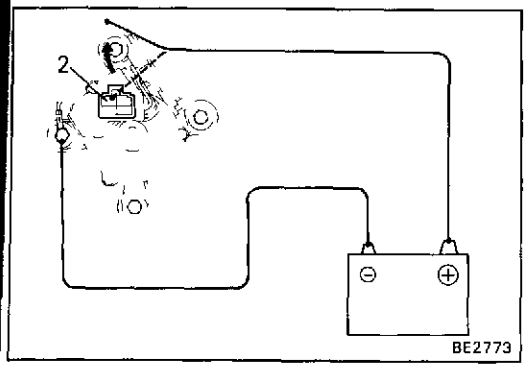

(Front Motor/Operation, Stopping at Stop Position)

(a) Operate the motor at low speed and stop the motor operation anywhere except at the stop position by disconnecting positive (+) lead from terminal 2.

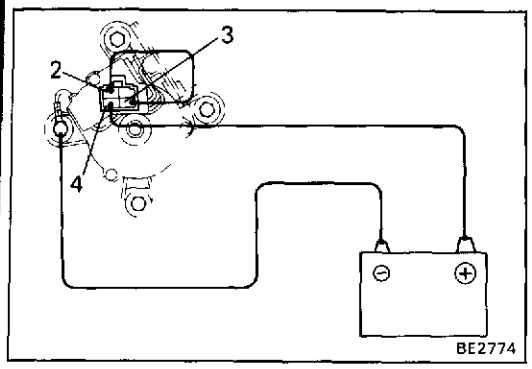

(b) Connect terminals 2 and 3

(c) Connect the positive (+) lead from the battery to terminal 4 and the negative (—) lead to the motor body, check that the motor stops running at the stop position after the motor operates again.

If operation is not as specified, replace the motor

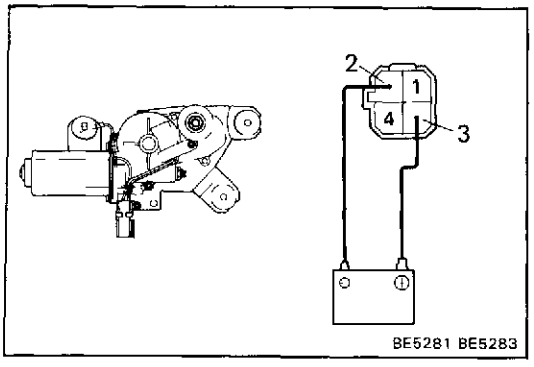

(Rear Motor/Operation at Low Speed)

Connect the positive (+) lead from the battery to terminal 3 and the negative (—) lead to terminal 2, check that the motor operates as low speed.

If operation is not at specified, replace the motor.

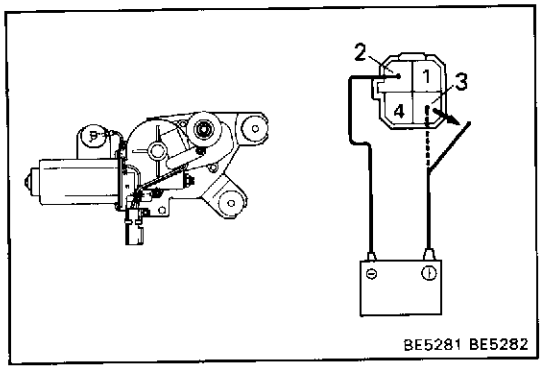

(Rear Motor/Operation, Stopping at Stop Position)

(a) Operate the motor at low speed and stop the motor operation anywhere except at the stop position by disconnecting positive (+) lead from terminal 3.

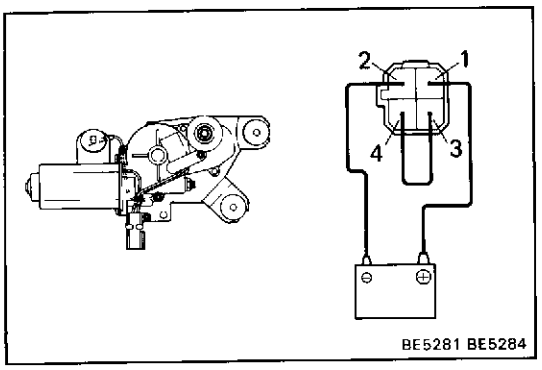

(b) Connect terminals 3 and 4.

(c) Connect the positive (+) lead from the battery to terminal 1 and the negative (−) lead to terminal 2, check that the motor stops running at the stop position after the motor operates again.

If operation is not as specified, replace the motor.

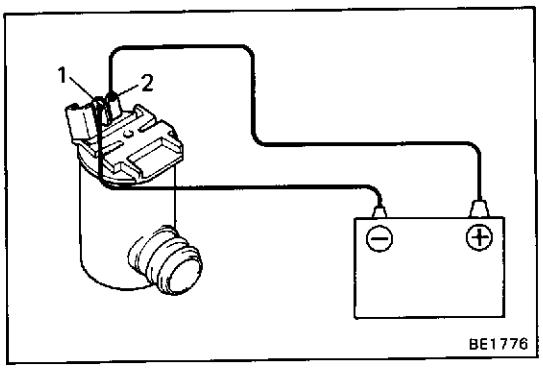

Washer System

1. **INSPECT WASHER SWITCH (Washer Switch)**

   See Wiper and Washer Switch on page BE-41.

2. **INSPECT WASHER MOTOR**

   Connect the positive (+) lead from the battery to terminal 2 and the negative (−) lead to terminal 1, check that the motor operates

   NOTICE: These tests must be performed quickly (within 20 seconds) to prevent the coil from burning out.

   If operation is not as specified, replace the motor

COMBINATION METER

Parts Location

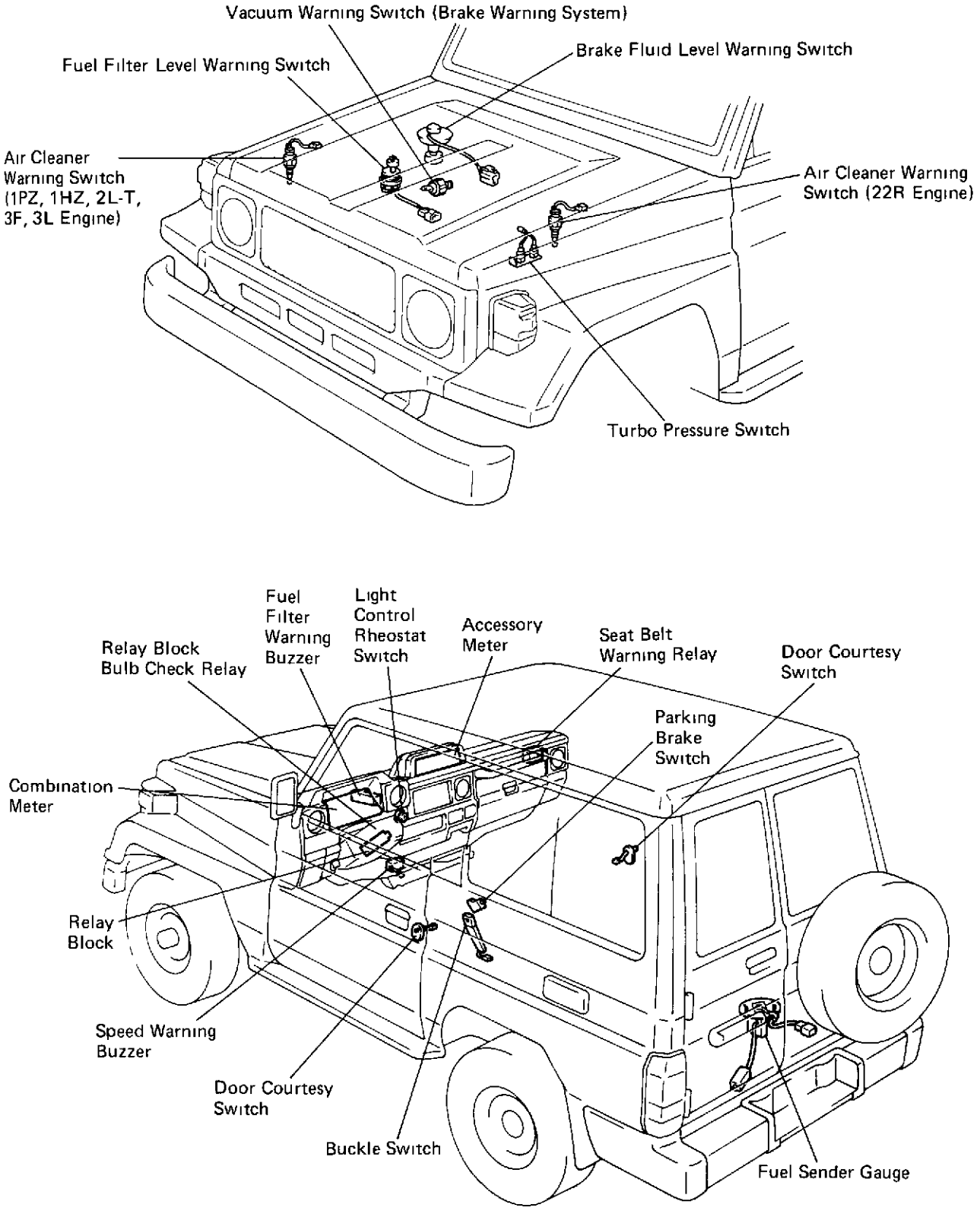

BE5350
BE5382

Hard Top

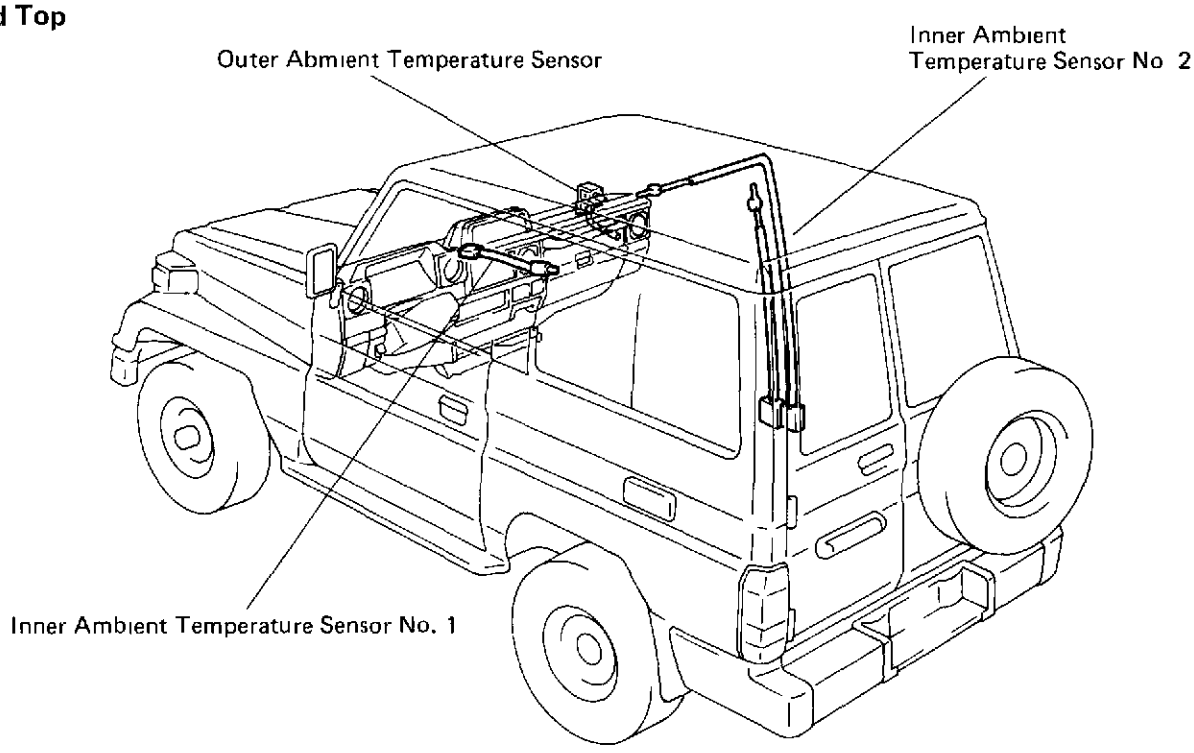

Pick Up

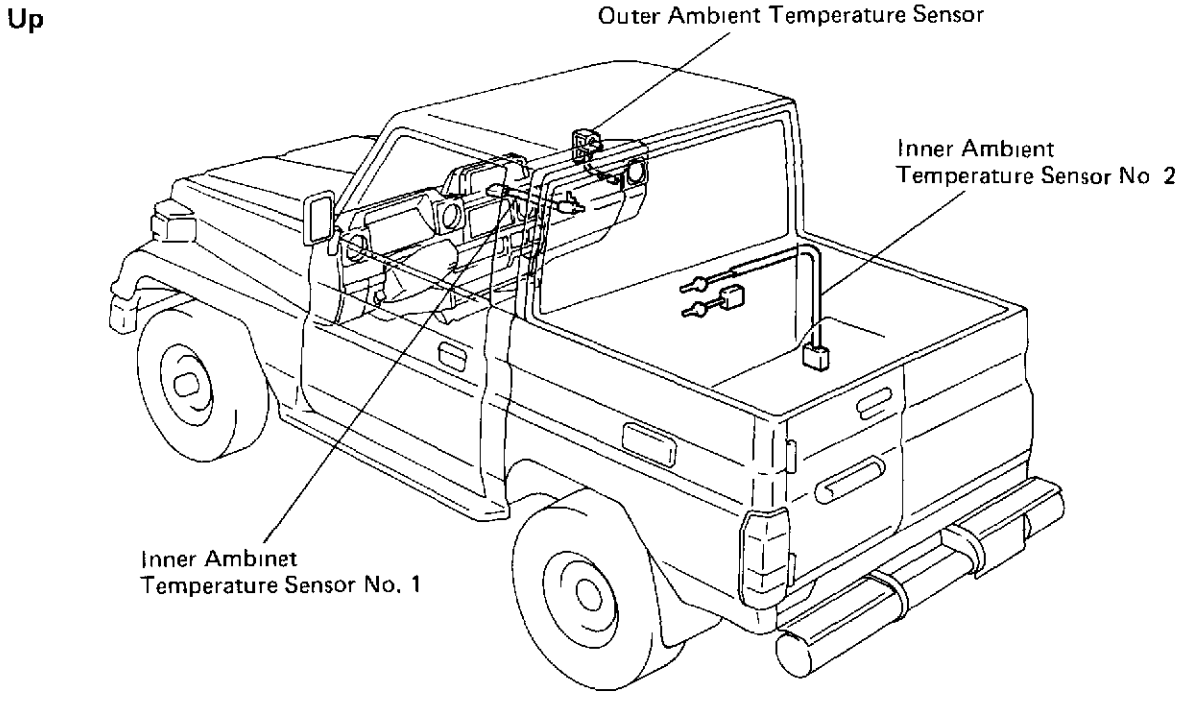

BE53
BE53

2R, 22R-E Engine

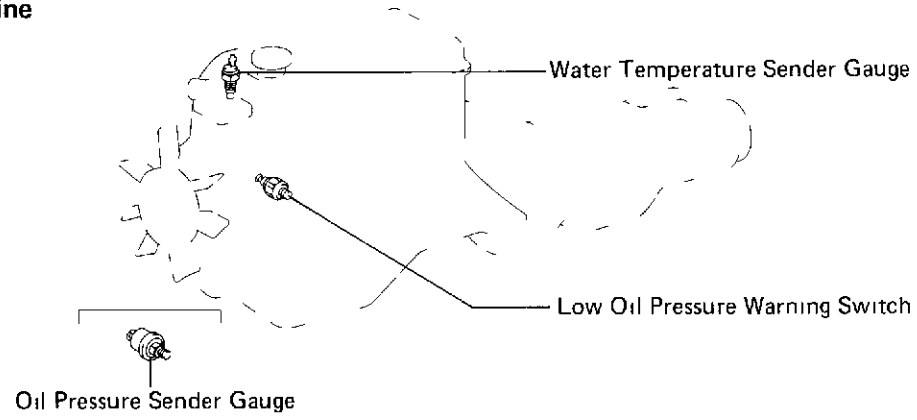

2L-T, 3L Engine

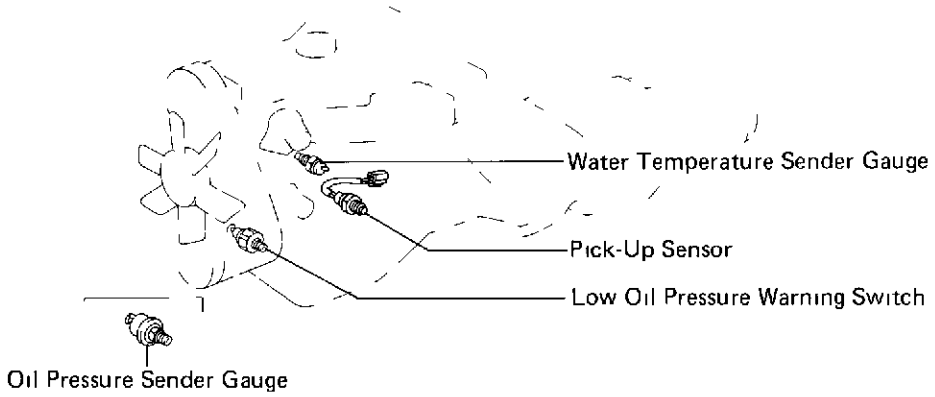

1HZ, 1PZ Engine

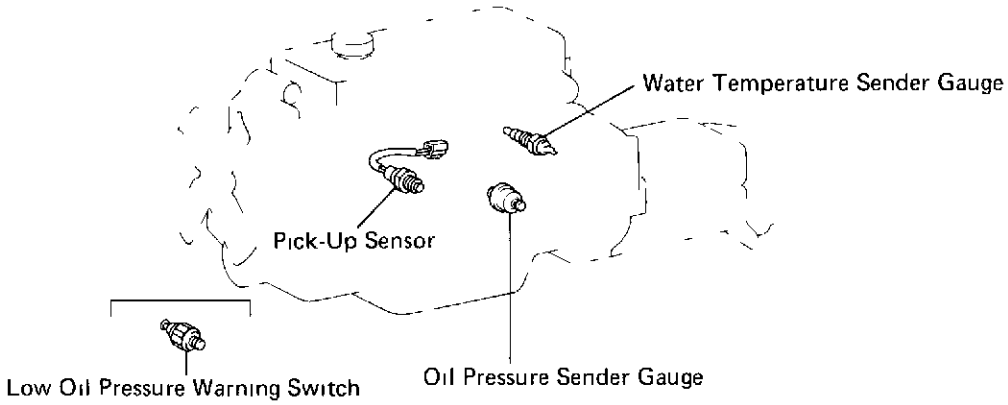

3F Engine

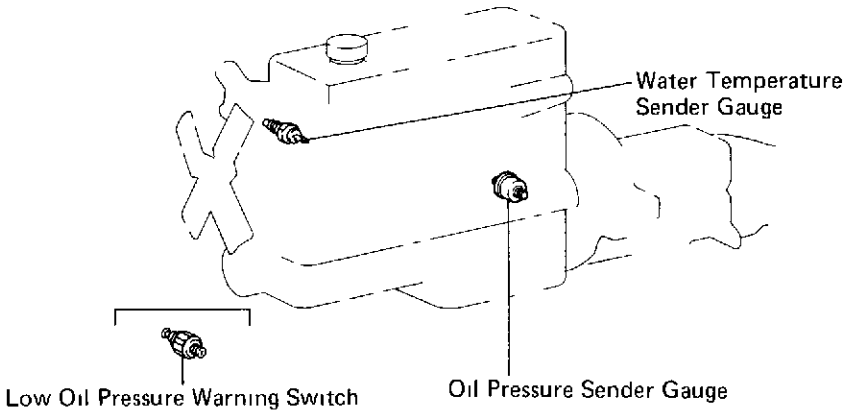

BE5351
BE5352
BE5353
BE5354

(w/ Tachometer)

Connector "A"

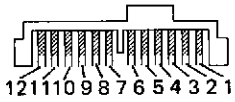

Connector "B"

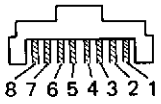

Connector "C"

Connector "D"

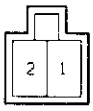

Connector "E"

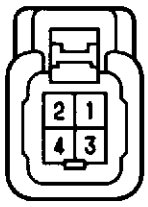

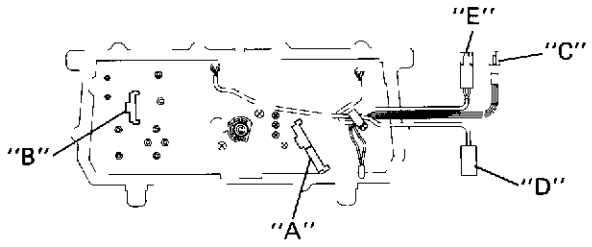

BE1267 BE2639 S 2 2 G N 2 2 e 4 2
BE5357

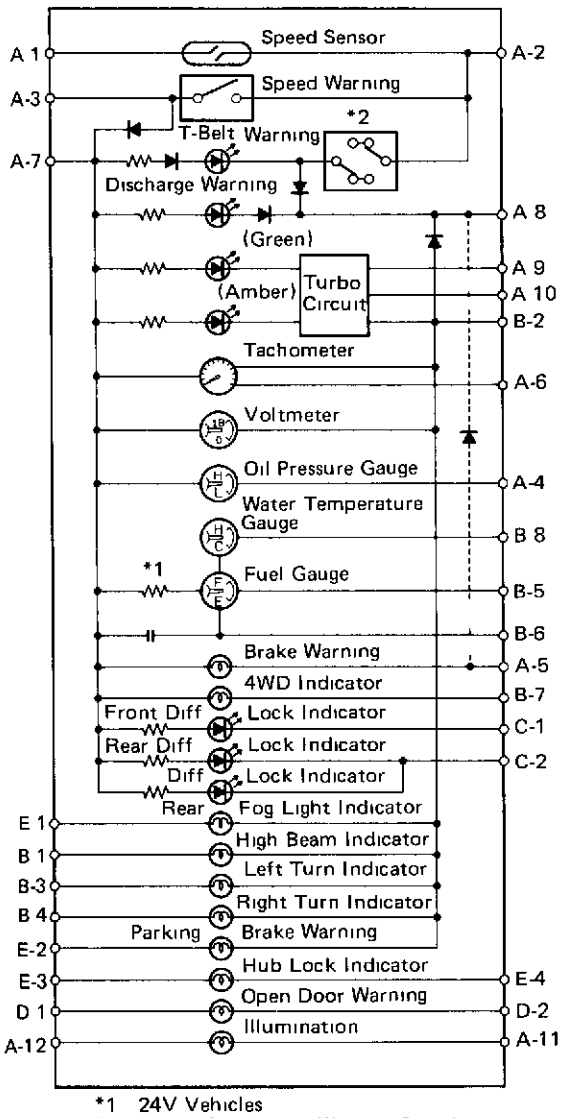

*1 24V Vehicles
*2 Cancel Switch and Warning Switch
– – – Europe

BE5358

No.		Wiring connector side
A	1	Emission ECU
	2	Ground
	3	Speed Warning Buzzer
	4	Oil Pressure Sender Gauge
	5	Brake Fluid Level Warning Switch, Vacuum Switch (Diesel Engine), Parking Brake Switch (Ex. Europe) and Buld Check Relay (Australia)
	6	Ignition Coil (Gasoline Engine) or Tacho Pick Sensor (Diesel Engine)
	7	ENGINE Fuse
	8	CHARGE Fuse
	9	Turbo Pressure Switch-terminal 2
	10	Turbo Pressure Switch-terminal 1
	11	Light Control Rheostat or Ground
	12	TAIL Fuse
B	1	Headlight Dimmer Switch
	2	Ground
	3	Turn Signal Switch (Left)
	4	Turn Signal Switch (Right)
	5	Fuel Sender Gauge
	6	Ground
	7	4WD Switch
	8	Water Temperature Sender Gauge
C	1	Front Diff. LOCK Switch
	2	Rear Diff LOCK Switch
D	1	DOME Fuse
	2	Door Courtesy Switch
E	1	Rear Fog Light Switch
	2	Parking Brake Switch (Europe)
	3	ENGINE Fuse
	4	Free Wheel Hub CPU

(Accessory Meter/Over Head Console)

- **Altimeter and Clinometer**

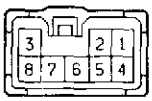

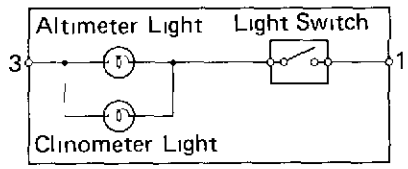

No.	Wiring connector side
1	Ground
3	TAIL Fuse

- **Thermometer and Altimeter**

Connector "A" Connector "B"

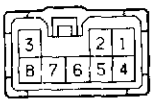

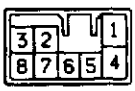

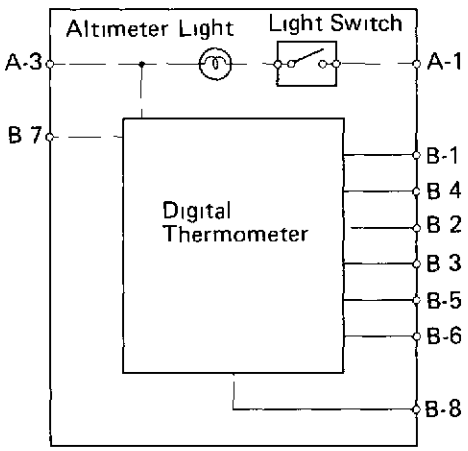

No		Wiring connector side
A	1	Ground
	3	TAIL Fuse
B	1	Inner Ambient Temperature Sensor No.2
	2	Inner Ambient Temperature Sensor No 1
	3	Inner Ambient Temperature Sensor No.1
	4	Inner Ambient Temperature Sensor No 2
	5	Outer Ambient Temperature Sensor
	6	Outer Ambient Temperature Sensor
	7	ENGINE Fuse
	8	Ground

- **Sub Fuel Gauge**

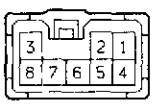

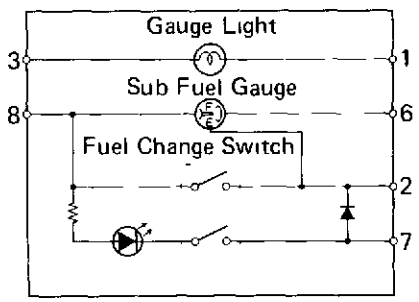

No	Wiring connector side
1	Ground
2	Fuel Transfer Solenoid Valve
3	TAIL Fuse
6	Sub Fuel Sender Gauge
7	Ground
8	ENGINE Fuse

Troubleshooting

Problem	Possible cause	Remedy	Page
Combination meter do not operate	ENGINE fuse blown Wiring or ground faulty	Replace fuse and check for short Repair as necessary	BE-4
Speedometer does not operate	Speedometer cable faulty Speedometer faulty	Check cable Check speedometer	 BE-57
Speed warning buzzer does not sound	Speed warning buzzer faulty Speed warning switch faulty Wiring or ground faulty	Check speed warning buzzer Check speed warning switch Repair as necessary	BE 58 BE-57
Tachometer does not operate	Tachometer faulty Pick-up sensor faulty Wiring or ground faulty	Check tachometer Check pick-up sensor Repair as necessary	BE 58 BE-58
Voltmeter does not operate	Voltmeter faulty Wiring or ground faulty	Check voltmeter	BE-58
Fuel gauge dose not operate	Receiver gauge faulty Sender gauge faulty Wiring or ground faulty	Check gauge Check gauge	BE-58 BE-60
Fuel filter warning light does not light up, warning buzzer does not sound (w/ buzzer)	Bulb burned out Warning switch faulty Warning buzzer faulty	Replace bulb Check switch Check buzzer	 BE-61 BE-61
Water temperature gauge does not operate	Receiver gauge faulty Wiring or ground faulty	Check gauge	BE 61
Oil pressure gauge does not operate	Receiver gauge faulty Sender gauge faulty Wiring or ground faulty	Check gauge Check gauge	BE-62 BE-63
Low oil pressure warning light does not light up	Bulb burned out Warning switch faulty Wiring or ground faulty	Replace bulb Check switch Repair as necessary	 BE-63
Parking brake warning light does not light up	Bulb burned out Parking brake switch faulty Wiring or ground faulty	Replace bulb Check switch Repair as necessary	 BE-63
Brake warning light dose not light up	Bulb burned out Level warning switch faulty Vacuum switch faulty Parking brake switch faulty Wiring or ground faulty	Replace bulb Check switch Check switch Check switch Repair as necessary	 BE 64 BE-64 BE 63
Open door warning light does not light up	Bulb burned out Courtesy switch faulty Wiring or ground faulty	Replace bulb Check switch Repair as necessary	 BE-65
Timing belt warning light does not light up	Bulb burned out Warning switch faulty Wiring or ground faulty	Replace bulb Check switch Repair as necessary	 BE-65
Seat belt warning light does not light up	Bulb burned out Buckle switch faulty Warning relay faulty Wiring or ground faulty	Replace bulb Check switch Check relay Repair as necessary	 BE-66 BE 67

Problem	Possible cause	Remedy	Page
Turbo indicator and warning light do not light up	Bulb burned out Drive circuit faulty Pressure switch faulty Wiring or ground faulty	Replace bulb Check drive circuit Check switch Repair as necessary	 BE-68 BE-67
Air cleaner warning light does not light up	Bulb burned out Warning switch faulty Wiring or ground faulty	Replace bulb Check switch Repair as necessary	 BE-68
Meter illumination control system does not operate	Bulb burned out Rheostat faulty Wiring or ground faulty	Replace bulb Check rheostat Repair as necessary	 BE-68
Thermometer does not operate	Sensor faulty Accessory meter faulty Wiring or ground faulty	Check sensor Check accessory meter Repair as necessary	BE-69 BE-69
Sub fuel gauge does not operate	Receiver gauge faulty Serder gauge faulty Wiring or ground faulty	Check gauge Check gauge Repair as necessary	BE-70 BE-70
Clinometer or Altimeter illumination do not light up	Bulb burned out Accessory meter faulty Wiring or ground faulty	Replace bulb Replace accessory meter Repair as necessary	

Parts Adjustment

(Diesel Engine)

Adjustment of Interval Switch for Timing Belt Warning System

NOTICE: Work carefully so that components are not damaged in any way.

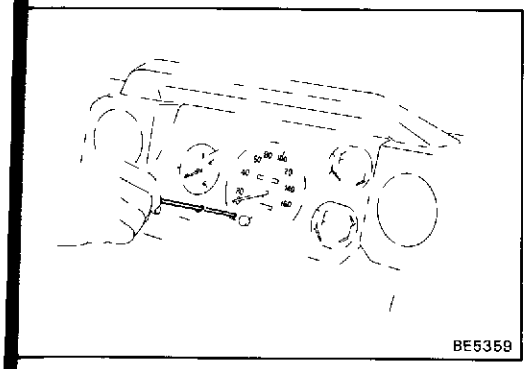

RESET CANCEL SWITCH

(a) Remove the gromet from the meter glass

(b) Push the reset switch.

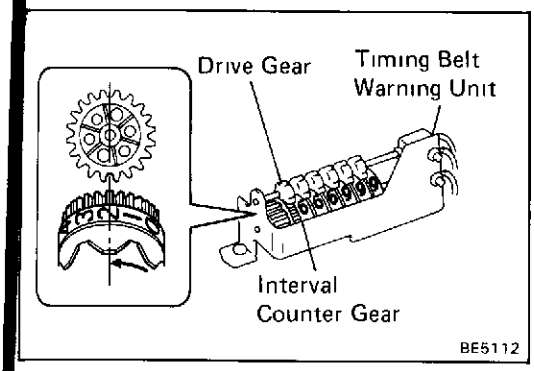

IF REPLACING TIMING BELT BEFORE WARNING LIGHT LIGHTS UP

(a) Remove the timing belt warning unit from the speedometer

(b) When installing the timing belt warning unit to the speedometer, rotate the interval counter gear in the direction of the arrow so that the tooth at number "2" on the interval counter gear engages with the drive gear on the speedometer side

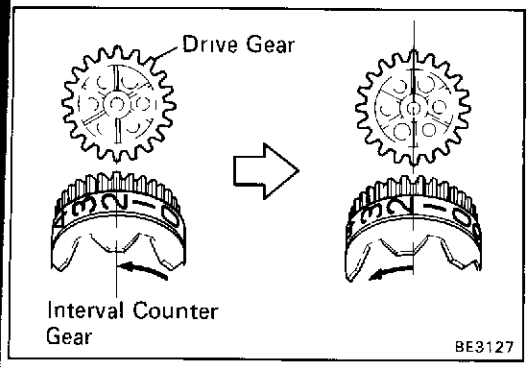

HINT: If the tooth at number "2" on the interval counter gear does not engage with the drive gear, move the tooth at number "2" slightly in the direction of the arrow until the tooth engage

(c) Install the timing belt warning unit to the speedometer

HINT: If turn on the timing belt warning light, reset the cancel switch.

Old odometer reading value (b)	(c) Adjustment number for interval counter gear	
	km/h display	MPH display
10000	1	7
20000	0	6
30000	9	5
40000	8	4
50000	7	3
60000	6	2
70000	5	1
80000	4	0
90000	3	A
100000	2	B
110000	1	9
120000	0	8
130000	9	7
140000	8	6
150000	7	5
•	•	•
•	•	•
•	•	•

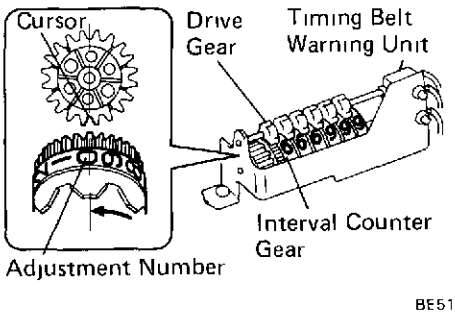

IF REPLACING SPEEDOMETER

(a) Remove the timing belt warning unit from the speedometer.

(b) Read the value in tens of thousands from the old odometer (taken to the next highest figure when the thousands column shows on thousand or more)

(c) Find the value from (b) in the table on the left, then find the corresponding number from adjustment of the interval counter gear.

Example. When the old odometer shows.

013251 km/h

(b) = 020000

(c) = "0" for the interval counter gear number

(d) When installing the timing belt warning unit to the speedometer, rotate the interval counter gear in the direction of the arrow so that the number (c) on the interval counter gear alighs with the cursor on the drive gear on the speedometer side

HINT Check that the tooth beside to number on the counter gear engages the gap on the cursor port on the drive gear.

(e) Install the timing belt warning unit to the speedometer

(km/h)

Standard indication	Allowable range	
	Ex. Australia	Australia
20	21 – 25	(17.5 – 21.5)
40	41 – 46	38 – 42
60	62.5 – 67	58 – 63
80	83 – 88	78 – 84
100	104 – 109	99 – 104.5
120	125 – 130.5	119.5 – 125.5
140	145.5 – 151.5	139.5 – 146.5
160	(166 – 173)	(159.5 – 167.5)

Figures in brakets are not official, they are for reference only

(mph)

Standard indication	Allowable range
20	21 – 23.5
40	41.5 – 44
60	62.5 – 66
80	83 – 87
100	104 – 108.5

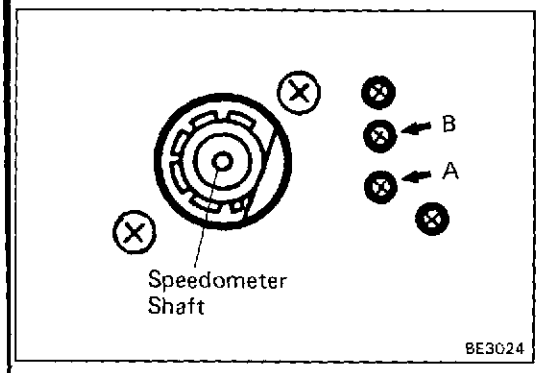

Parts Inspection

Speedometer System

1. INSPECT SPEEDOMETER (ON-VEHICLE)

(a) Using a speedometer tester, inspect the speedometer for allowable indication error and check the operation of the odometer.

HINT Tire wear and tire over or under inflation will increase the indication error.

If error is excessive, replace the speedometer.

(b) Check the speedometer for pointer vibration and abnormal noise

HINT. Pointer vibration can be caused by a loose speedometer cable.

2. INSPECT SPEED SENSOR

Check that there is continuity between terminals A and B four times per each revolution of the speedometer shaft.

If operation is not as specified, replace the speedometer

3. INSPECT SPEED WARNING BUZZER SWITCH

(a) Press down on the tabs and remove the combination meter glass from the combination meter case.

NOTICE: Be careful not to dirty or damage the speedometer panel.

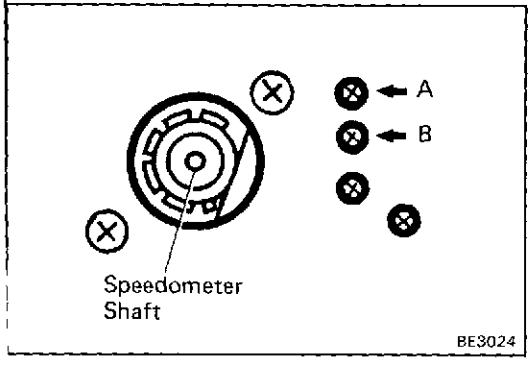

(b) Move the speedometer needle to the 124 km/h or 77 mph mark and fix it there.

(c) Keep on turning the speedometer shaft, check that the continuity between terminals A and B repeatedly fluctuates.

If operation is not as specified, replace the speedometer.

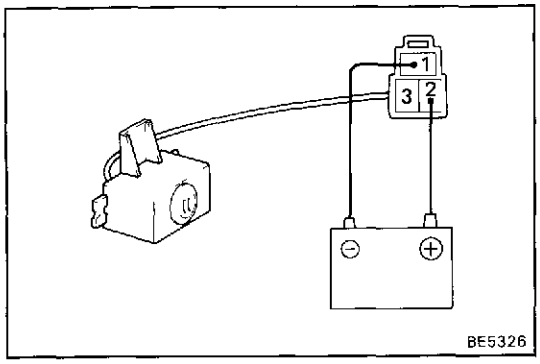

4. INSPECT SPEED WARNING BUZZER

Apply battery voltage intermittently between terminals of the buzzer, check that the buzzer sounds.

HINT: The sound will be distorted if the buzzer is tilted

If operation is not as specified, replace the buzzer.

Tachometer System

(rpm) DC 13 V 25°C (77°F)/12 V Vehicles DC 26 V 25°C (77°F)/24 V Vehicles	
Standard	Allowable range
1000 (2000) 3000 (4000) 5000 (6000)	900 — 1100 (1875 — 2125) 2850 — 3150 (3850 — 4150) 4850 — 5150 (5870 — 6180)
Figures in brackets are not official, they are for reference only.	

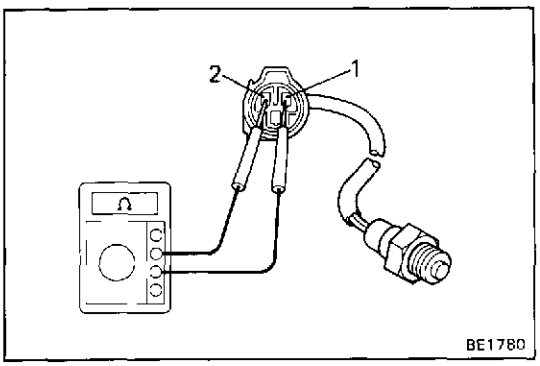

1. INSPECT TACHOMETER (ON-VEHICLE)

(a) Connect a tune-up test tachometer, and start the engine.

NOTICE:

- **Reversing the connection of the tachometer will damage the transistors and diodes inside.**
- **When removing or installing the tachometer, be careful not to drop or subject it to heavy shocks.**

(b) Compare the tester and tachometer indications.

If error is excessive, replace the tachometer

2. (Diesel Engine)
INSPECT PICK-UP SENSOR

Measure the resistance between terminals 1 and 2

Resistance: approx. 730 Ω

If resistance value is not as specified, replace the sensor.

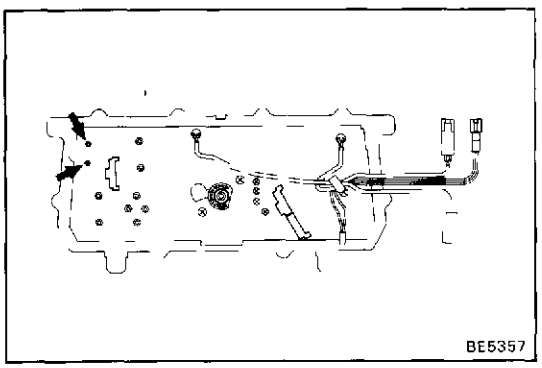

Voltmeter System

INSPECT VOLTMETER (ON-VEHICLE)

Compare the tester and voltmeter indications.

If error is excessive, replace the voltmeter

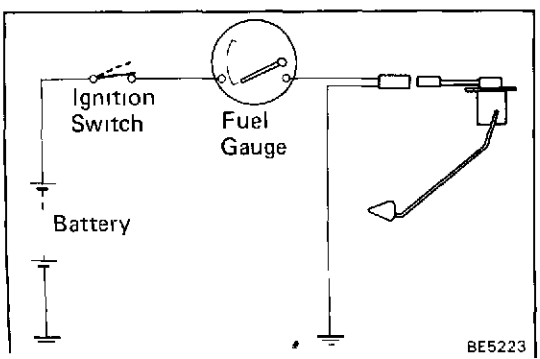

Fuel Gauge System

1. INSPECT RECEIVER GAUGE (Operation)

(a) Disconnect the connector from the sender gauge

(b) Turn the ignition switch ON, check that the receiv gauge needle indicates EMPTY

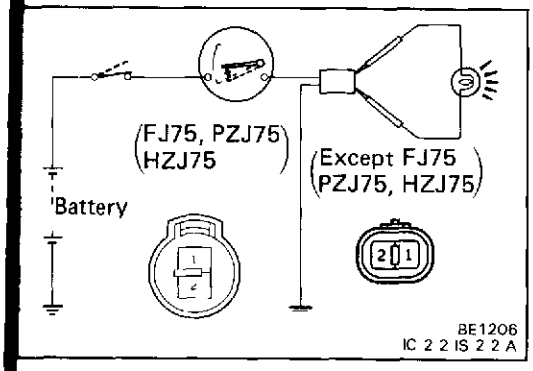

(c) Connect terminals 1 and 2 on the wire harness side connector through a 3.4 W test bulb.

(d) Turn the ignition switch ON, check that the bulb lights up and receiver gauge needle moves toward the full side.

HINT: Because of the silicon oil in the gauge, it will take a short time for the needle to stabilize.

If operation is not as specified, inspect the receiver gauge resistance and the voltage regulator.

w/ Tachometer

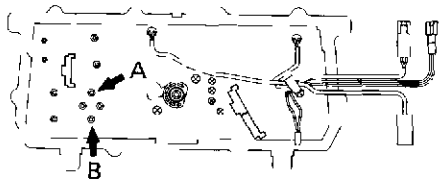

w/o Tachometer

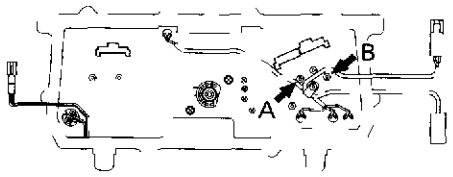

BE5357
BE5355

(Resistance)

HINT: The number in brackets ( ) applies to 24 V vehicles.

Measure the resistance between terminals

Between terminals	Resistance (Ω)
A — B	Approx. 55 (90)

If resistance valve is not as specified, replace the receiver gauge.

w/ Tachometer

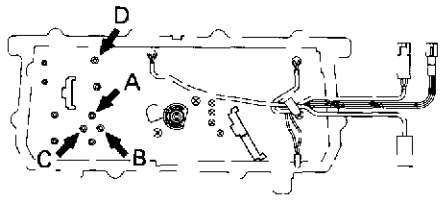

w/o Tachometer

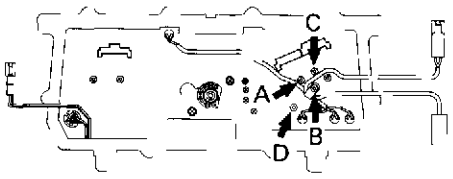

BE5357
BE5355

(Voltage Regulator)

HINT: The number in brackets ( ) applies to 24 V vehicles.

(a) Connect the positive (+) lead from the battery to terminal A (D) and the negative (—) lead to terminal B.

(b) Connect the positive (+) lead from the voltmeter to terminal C and the negative (—) lead to terminal B, check that the voltmeter needle vibrates near the 7 volts position.

If voltage value is not as specified, replace the receiver gauge.

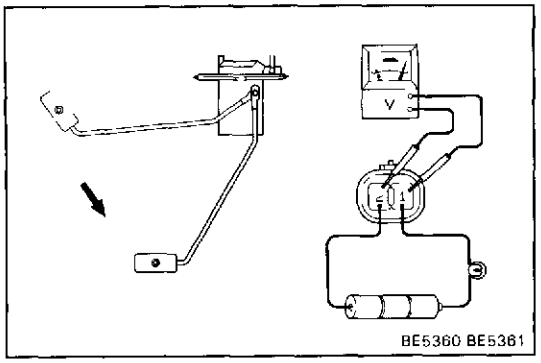

BE5360 BE5361

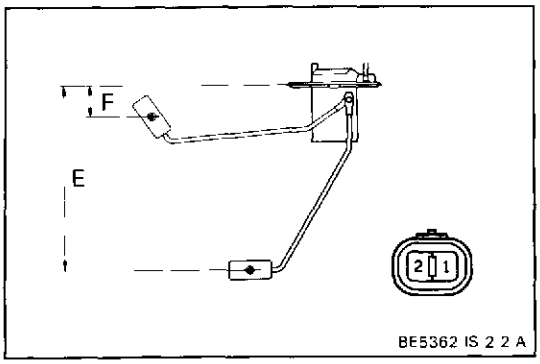

BE5362 IS 2 2 A

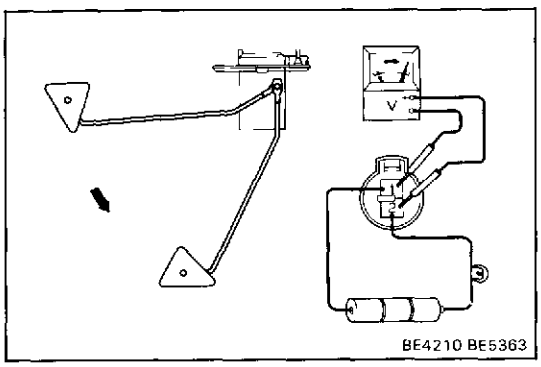

BE4210 BE5363

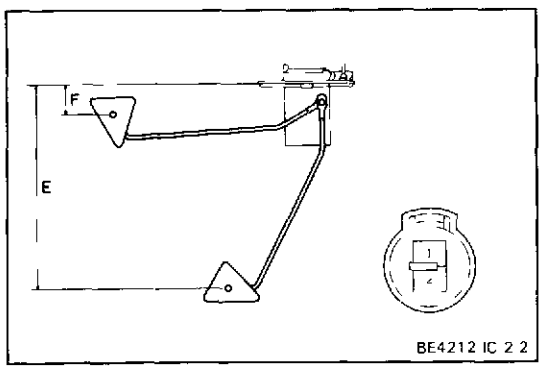

BE4212 IC 2 2

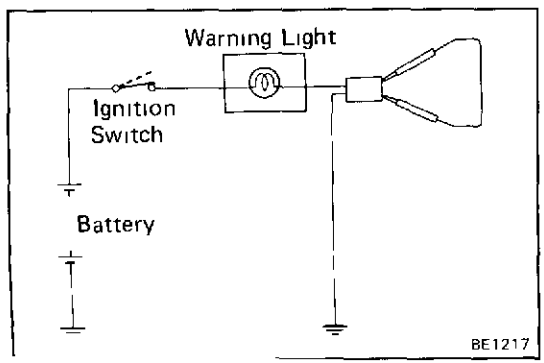

BE1217

2. INSPECT SENDER GAUGE

Except FJ75, PZJ75 and HZJ75

(Operation)

(a) Connect a series of three 1.5 V dry cell batteries.

(b) Connect the positive (+) lead from the dry cell batteries to terminal 2 through a 3.4 W test bulb and the negative (−) lead to terminal 1

(c) Check that the voltage rises between terminals 1 and 2 as the float is moved from the top to bottom position.

(Resistance)

Measure the resistance between terminals 1 and 2 for each float position.

Float position mm (in.)		Resistance (Ω)
F	Approx 76 7 (3 020)	Approx 3
E	Approx. 302 4 (11 905)	Approx. 110

If resistance value is not as specified, replace the sender gauge.

FJ75, PZJ75 and HZJ75

(Operation)

(a) Connect a series of three 1.5 V dry cell batteries.

(b) Connect the positive (+) lead from the dry cell batteries to terminal 2 through a 3.4 W test bulb and the negative (−) lead to terminal 1.

(c) Check that the voltage rises between terminals 1 and 2 as the float is moved from the top to bottom position

(Resistance)

Measure the resistance between terminals 1 and 2 for each float position

Float position mm (in)		Resistance (Ω)
F	Approx 56 (2 20)	Approx. 3
E	Approx 259 1 (10 201)	Approx 110

If resistance value is not as specified, replace the sender gauge.

Fuel Filter Warning System

1. INSPECT WARNING LIGHT

(a) Disconnect the connector from the warning switch and connect terminals on the wire harness side connector.

(b) Remove the CHARGE fuse and turn the ignition switch ON

(c) Check that the warning light lights up and the warning buzzer sounds.

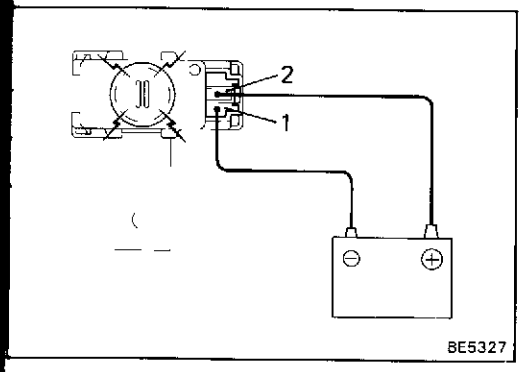

2. INSPECT WARNING BUZZER

Connect the positive (+) lead from the battery to terminal 2 and the negative (−) lead to terminal 1, check that the buzzer sounds

If buzzer does not sound, replace the buzzer.

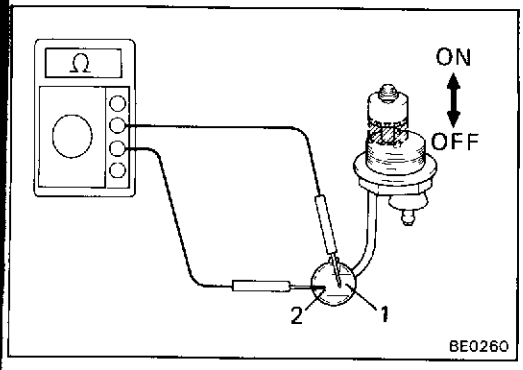

3. INSPECT WARNING SWITCH

(a) Check that there is no continuity between terminals with the warning switch OFF (float down)

(b) Check that there is continuity between terminals with the warning switch ON (float up).

If operation is not as specified, replace the switch.

Water Temperature Gauge System

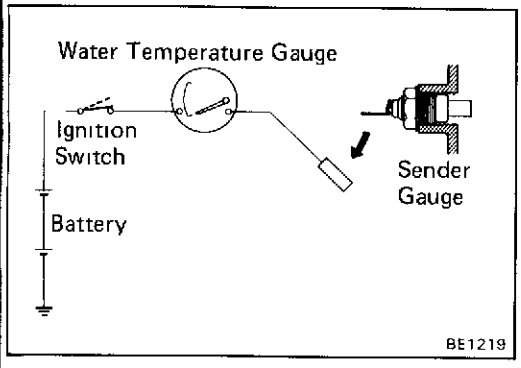

1. INSPECT RECEIVER GAUGE (Operation)

(a) Disconnect the connector from the sender gauge.

(b) Turn the ignition switch ON, check that the receiver gauge needle indicates COOL.

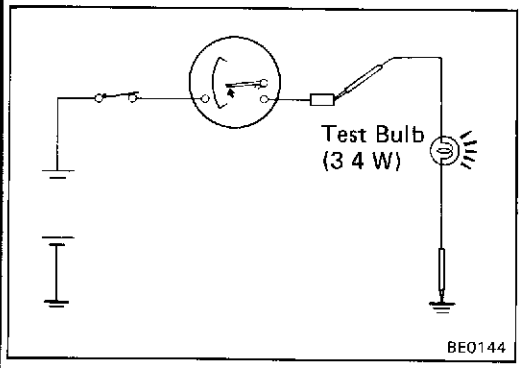

(c) Ground terminal on the wire harness side connector through a 3.4 W test bulb.

(d) Turn the ignition switch ON, check that the bulb lights up and the receiver gauge needle moves to the hot side.

If operation is as specified, replace the sender gauge Then, recheck the system.

If operation is not as specified, measure the receiver gauge resistance

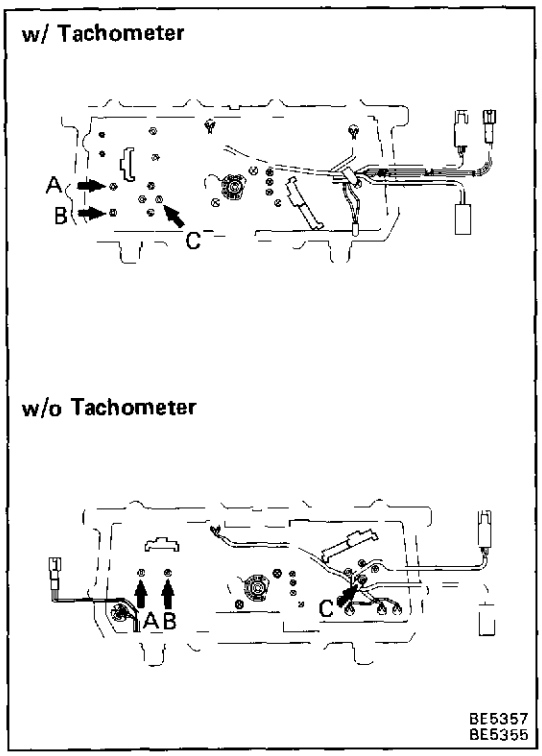

(Resistance)

Measure the resistance between terminals.

Between terminals	Resistance (Ω)
A — B	Approx. 25

If resistance value is not as specified, replace the receiver gauge.

(Meter circuit)

Check that there is continuity between terminals B and C.

If continuity is as specified, inspect voltage Regulator (See page BE-59).

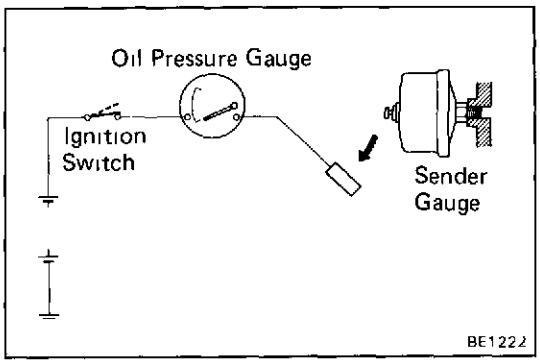

Oil Pressure Gauge System

1. **INSPECT RECEIVER GAUGE**

(Operation)

(a) Disconnect the connector from the sender gauge.

(b) Turn the ignition switch ON, check that the receiver gauge needle indicates to the low.

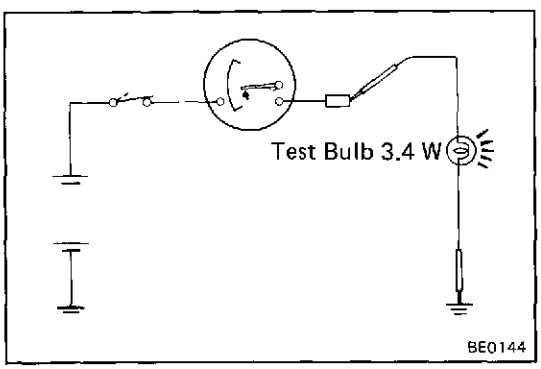

(c) Ground the terminal on the wire harness side through a 3.4 W test bulb.

(d) Turn the ignition switch ON, check that the bulb lights and the receiver gauge needle moves to the high side.

If the operation is not as specified, measure the receiver gauge resistance.

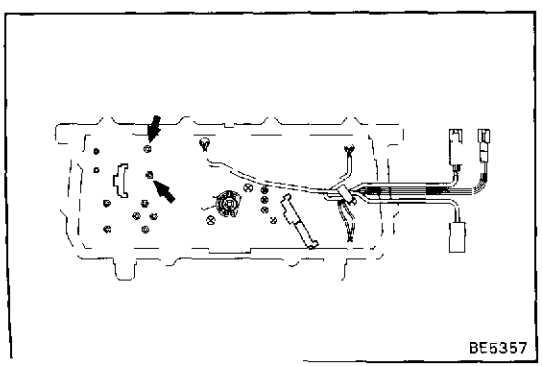

(Resistance)

HINT: The number in brackets ( ) applies to 24 V vehicles.

Measure the receiver gauge resistance between terminals.

Resistance: Approx. 25 (44) Ω

If resistance value is not as specified, replace the receiver gauge.

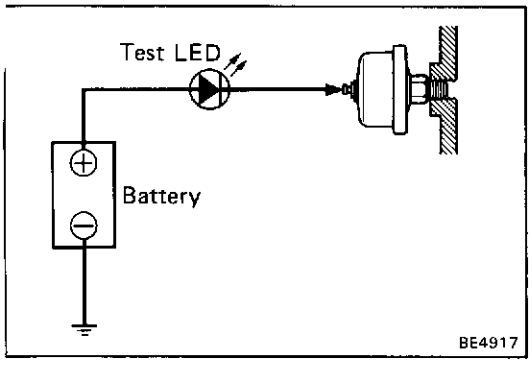

2. **INSPECT SENDER GAUGE**

(a) Disconnect the connector from the sender gauge.

(b) Apply battery voltage to the sender gauge terminal through a test LED

(c) Check that the bulb does not light when the engine is stopped.

(d) Check that the LED flashes when the engine is running. The number of flashes should vary with engine speed

If operation is not as specified, replace the sender gauge.

Low Oil Pressure Warning System

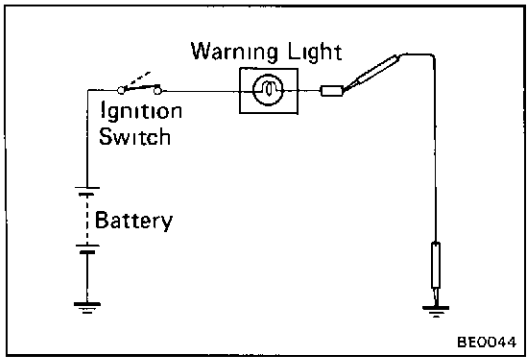

1. **INSPECT WARNING LIGHT**

(a) Disconnect the connector from the warning switch and ground terminal on the wire harness side connector.

(b) Turn the ignition switch ON, check that the warning light lights up.

If the warning light does not light up, test the bulb.

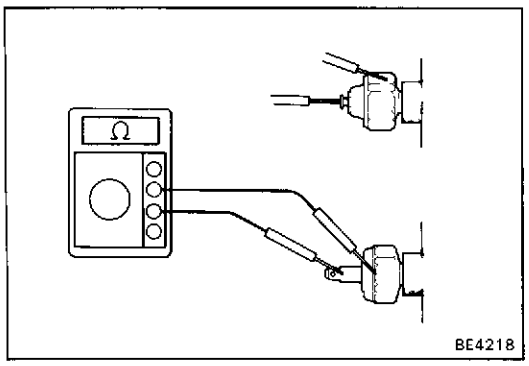

2. **INSPECT LOW OIL PRESSURE WARNING SWITCH**

(a) Disconnect the connector from the switch.

(b) Check that there is continuity between terminal and ground with the engine stopped.

(c) Check that there is no continuity between terminal and ground with the engine running.

HINT: Oil pressure should be over 0.5 kg/cm² (7.1 psi, 49 kPa)

If operation is not as specified, replace the switch.

Parking Brake Warning System

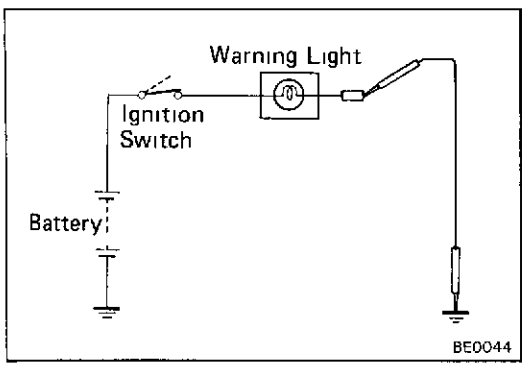

1. **INSPECT WARNING LIGHT**

(a) Disconnect the connector from the parking brake switch and ground terminal on the wire harness side connector.

(b) Turn the ignition switch ON, check that the warning light lights up.

If the warning light does not light up, test the bulb.

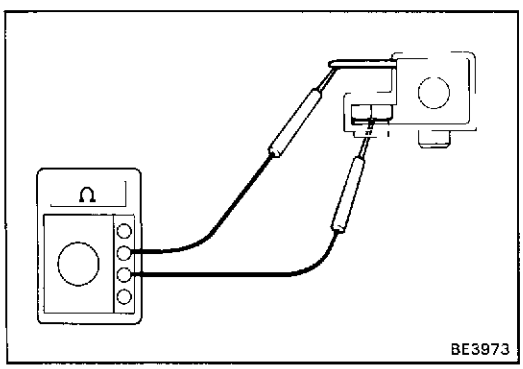

2. **INSPECT PARKING BRAKE SWITCH**

(a) Check that there is continuity between terminals with the switch ON (switch pin released).

(b) Check that there is no continuity between terminals with the switch OFF (switch pin pushed in).

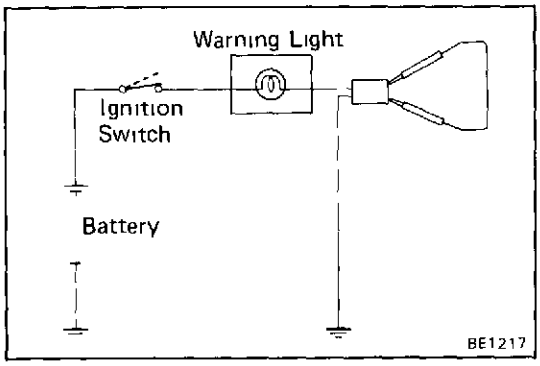

Brake Warning System

1. INSPECT WARNING LIGHT

(a) (w/o Parking Brake Warning System)

Disconnect the connectors from the level warning switch, parking brake switch and (Diesel Engine) vacuum warning switch.

(w/ Parking Brake Warning System)

Disconnect the connectors from the level warning switch and (Diesel Engine) vacuum warning switch.

(b) Connect terminals on the wire harness side connector of the level warning switch connector.

(c) Turn the ignition switch ON, check that the warning light lights up

If the warning light does not light up, test the bulb.

2. INSPECT SWITCHES

(Parking Brake Switch: w/o Parking Brake Warning System)

See step 2 on page BE-63.

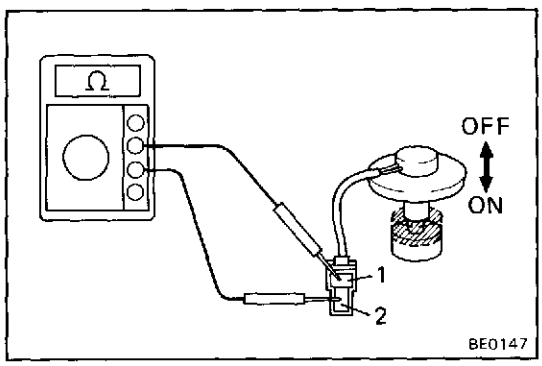

(Brake Fluid Level Warning Switch)

(a) Check that there is no continuity between terminals with the switch OFF (float up).

(b) Check that there is continuity between terminals with the switch ON (float down)

If operation is not as specified, replace the switch.

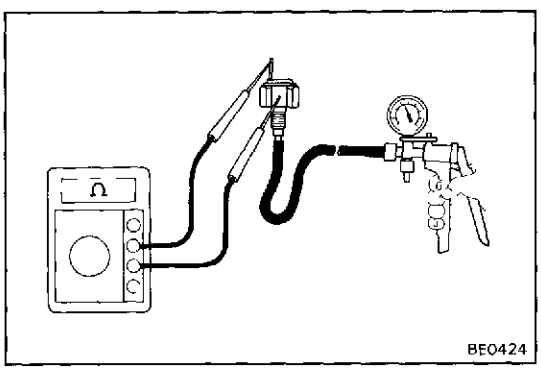

(Vacuum Warning switch: Diesel Engine)

(a) Check that there is continuity between terminal an the switch body with a no vacuum.

(b) Apply 200 ± 40 mmHg (7.87 ± 1 57 in.Hg, 26 ± 5 3 kPa) of pressure.

(c) Check that there is no continuity between termir and the switch body.

If operation is not as specified, replace the switch.

3. INSPECT RELAY

(Bulb Check Relay: Australia/Continuity)

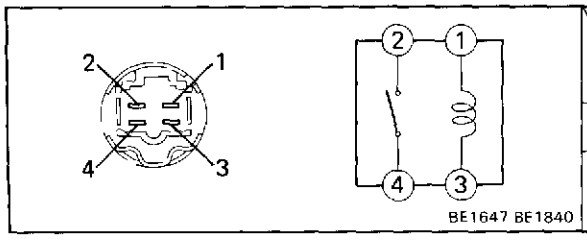

Terminal / Condition	1	2	3	4
Constant	○	∿∿∿	○	
Apply battery voltage to terminals 1 and 3		○		○

If continuity is not as specified, replace the relay.

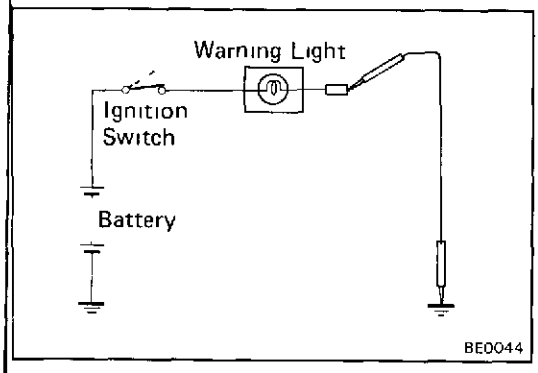

Open Door Warning System

1. INSPECT WARNING LIGHT

(a) Disconnect the connector from the door courtesy switch and ground terminal on the wire harness side connector.

(b) Turn the ignition switch ON, check that the warning light lights up

If the warning light does not light up, test the bulb.

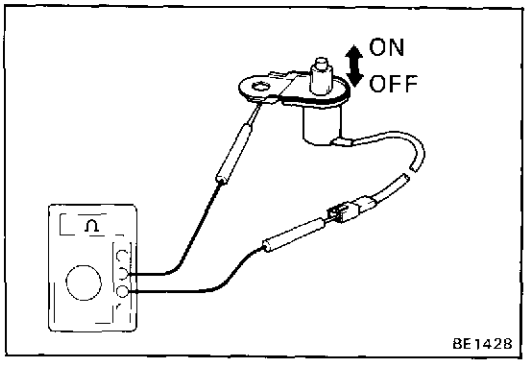

2. INSPECT COURTESY SWITCH

(a) Check that there is continuity between terminal and the switch body with the ON (switch pin released· opened door).

(b) Check that there is no continuity between terminal and the switch body with the OFF (switch pin pushed in: closed door).

If operation is not as specified, replace the switch.

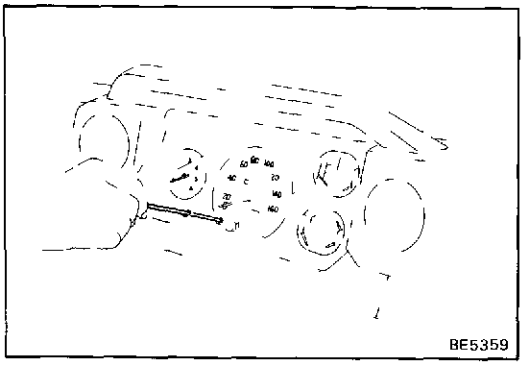

Timing Belt Warning System

1. INSPECT WARNING LIGHT

(a) Turn the ignition switch ON, check that the warning light lights up.

If the warning light does not light up, test the bulb.

(b) When the engine starts, check that the warning light goes out.

HINT: If the warning light does not go out, push the reset switch switch.

If the warning light does not go out, inspect the warning reset switch.

(c) Check that the warning light lights up when the reset switch is pressed during engine operation.

(d) Press the reset switch again and check that the warning light goes out.

2. INSPECT WARNING RESET SWITCH

Check that each time the reset switch is pressed that there alternately is, then is not, continuity between A and B.

HINT. After inspection, always perform installation when there is no continuity and check that the warning light does not light up.

If operation is not as specified, replace the speedometer assembly.

w/ Tachometer

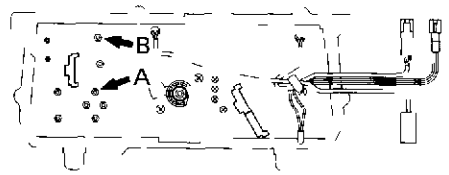

w/o Tachometer

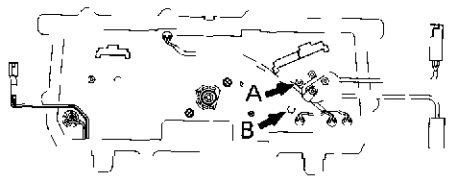

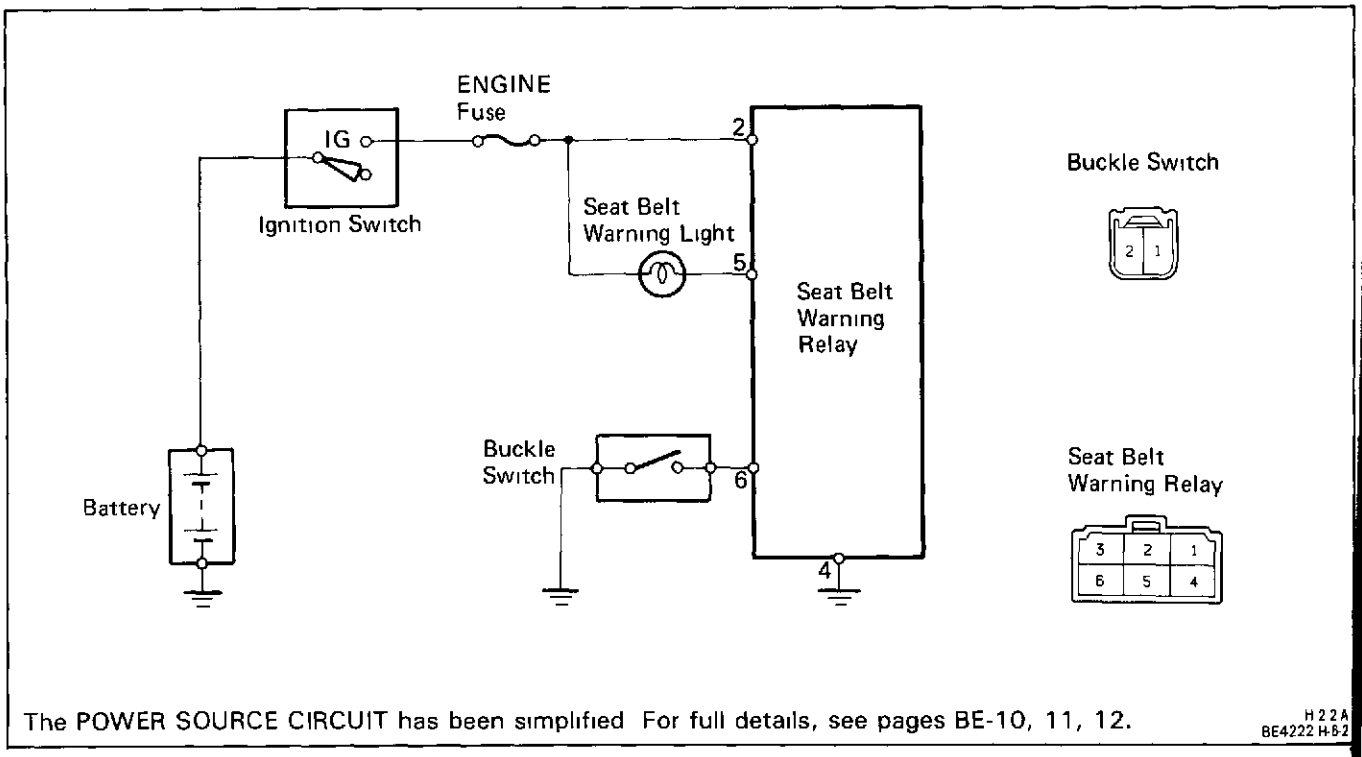

The POWER SOURCE CIRCUIT has been simplified For full details, see pages BE-10, 11, 12.

H22A
BE4222 H-5-2

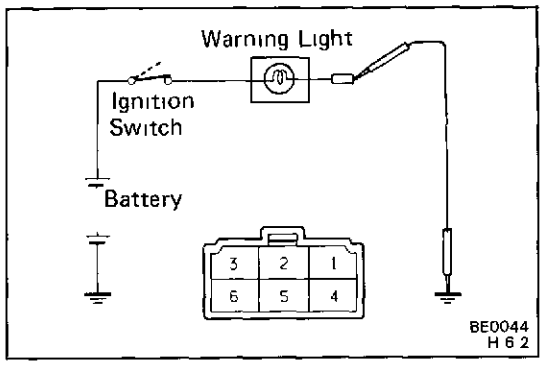

1. INSPECT WARNING LIGHT

(a) Disconnect the connector from the seat belt warning relay.

(b) Ground terminal 5 on the wire harness side connector

(c) Turn the ignition switch ON, check that the warning light lights up.

If the warning light does not light, test the bulb.

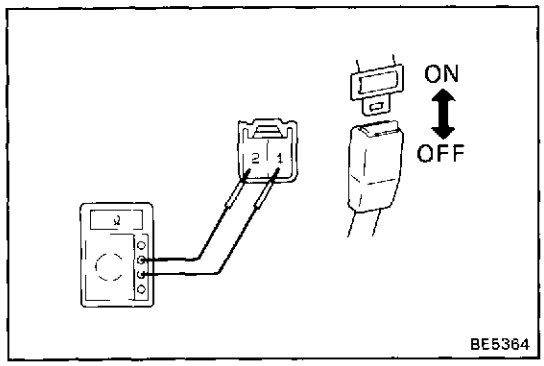

2. INSPECT BUCKLE SWITCHES

(a) Check that there is no continuity between termina with the switch ON (belt unfastened).

(b) Check that there is continuity between terminals w the switch OFF (belt fastened).

If operation is not as specified, replace the seat belt inn

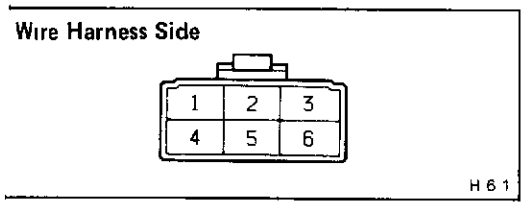

3. INSPECT SEAT BELT RELAY (Relay Circuit)

Disconnect the connector from the relay and inspect the connector on the wire harness side as shown in the chart.

Check for	Tester connection	Condition		Specified Value
Continuity	4 — Ground	Constant		Continuity
	6 — Ground	Buckle switch position	OFF (Belt fastened)	No continuity
			ON (Belt unfastened)	Continuity
Voltage	2 — Ground	Ignition switch position	LOCK or ACC	No voltage
			ON	Battery voltage
	5 — Ground	Ignition switch position	LOCK or ACC	No voltage
			ON	Battery voltage

If circuit is as specified, replace the relay.

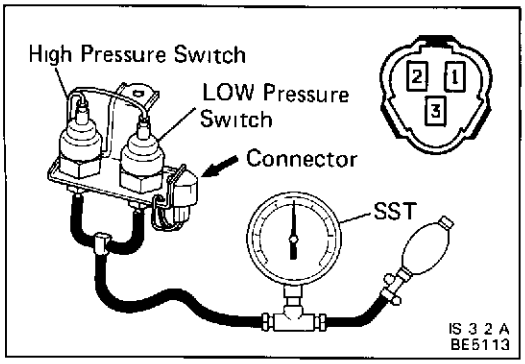

Turbo Indicator and Warning System

1. INSPECT INDICATOR AND WARNING LIGHT OPERATION (Refer to EM Section of ENGINE Repair Manual)

2. INSPECT PRESSURE SWITCH OPERATION

(a) At the 3-way union, disconnect the pressure hose from the compressor elbow and connect a turbocharger pressure gauge (SST).

SST 09992-00241

(b) Check that the low and high pressure switch are continuity between terminal and ground as shown in the chart.

(High Pressure Switch)

Terminal and ground / Condition	1	Ground
No pressure	O	O
Apply 0.84 kg/cm² (11 9 psi, 82 4 kPa) of pressure		

(Low Pressure Switch)

Terminal and ground / Condition	2	Ground
No pressure	O	O
Apply 0 14 kg/cm² (2 0 psi, 13 7 kPa) of pressure		

If operation is not as specified, replace the switch.

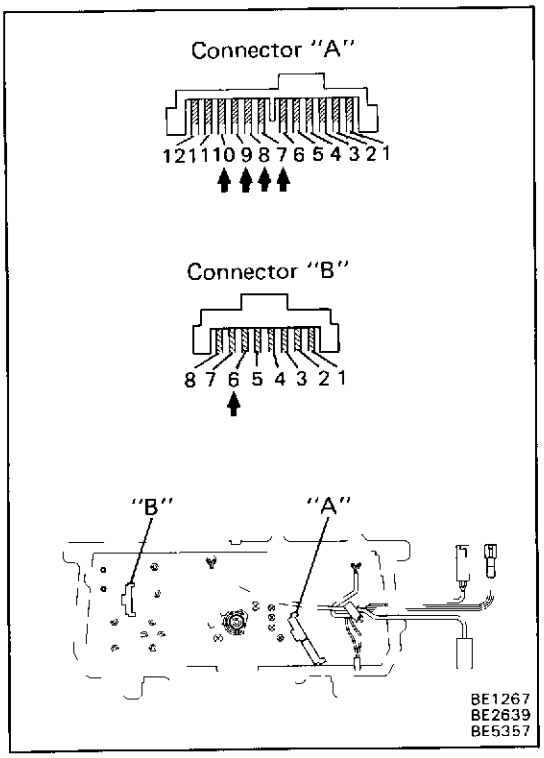

3. INSPECT TURBO INDICATOR AND WARNING LIGHT DRIVE CIRCUIT

(a) Remove the Combination meter.

(b) Connect the positive (+) lead and negative (−) lead from the battery to combination meter terminals as shown in the chart and check that the LED operation

Positive (+) (Combination Meter Terminal)	Negative (−) (Combination Meter Terminal)	LED Condition	
		Green	Amber
(A 7)	(A-9, A 10, B-6)	OFF	OFF
(A 7)	(A-10, B 6)	ON	OFF
(A-7)	(B-6)	OFF	ON
(A-7)	(A 9, B-6)	OFF	ON
(A 7)	(A-8, B-6)	ON	ON

If operation is not as specified, replace the combination meter.

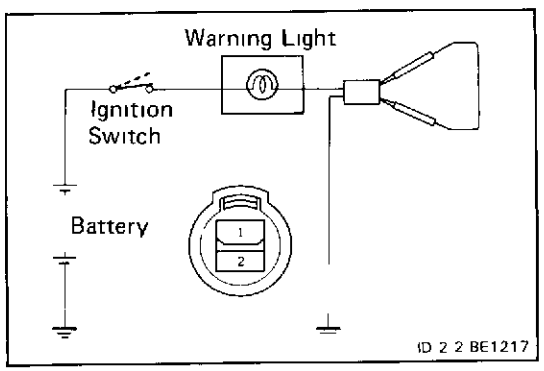

Air Cleaner Warning System

1. INSPECT WARNING LIGHT

(a) Disconnect the connector from the vacuum switch

Connect the wire harness side connector terminals 1 and 2.

(b) Start the engine. Check that the bulb lights.

If the warning light does not light up, test the bulb.

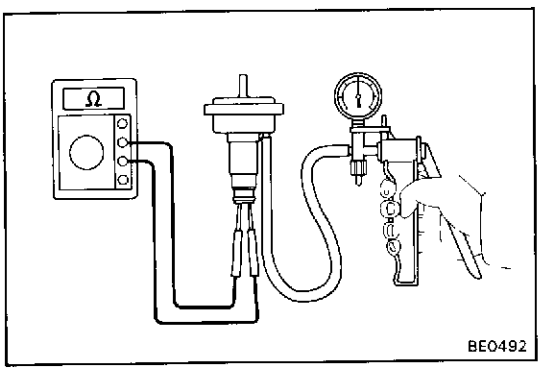

2. INSPECT VACUUM SWITCH

(a) With a vacuum of 29.4 ± 3.7 mmHg (1.157 ± 0.14 in.Hg, 3.9 ± 0.5 kPa) or above, check that there is continuity between terminals.

(b) Check that there is no continuity between terminals with no vacuum.

If operation is not as specified, replace the switch

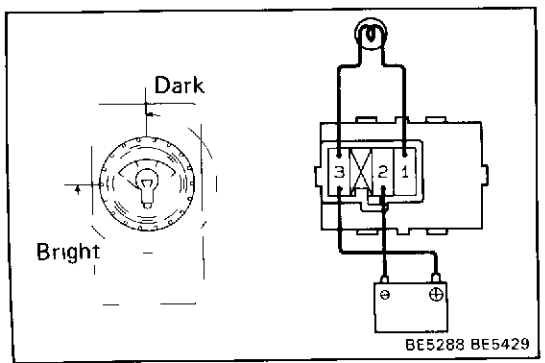

Meter Illumination Control System

INSPECT LIGHT CONTROL RHEOSTAT

(a) Connect terminals 1 and 3 through a 3.4 W test bulb

(b) Connect the positive (+) lead from the battery to terminal 3 and the negative (−) lead to terminal 2.

(c) Gradually turn the rheostat knob to clockwise, check that the test bulb brightness changes from dark to bright.

If operation is not as specified, replace the rheostat.

Inner Ambient Temperature Sensor No. 1
(Instrument Panel Side)

Inner Ambient Temperature Sensor No. 2
(Roof or Back Panel Side)

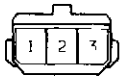

Outer Ambient Sensor

GA 2 2 C
GA 3 1
1H 3 1

THERMOMETER SYSTEM

1. INSPECT INNER AND OUTER AMBIENT TEMPERATURE SENSOR

Measure the resistance between terminals 1 and 2

(Inner)

Temperature (°C)	−30	−20	−10	0	10	20	30	40	50	60	70
Resistance (kΩ)	6 24	3 68	2 25	1 41	0 42	0 61	0 41	0 29	0 20	0 15	0 11

(Outer)

Temperature (°C)	−30	−20	−10	0	10	20	30	40	50	60	70
Resistance (kΩ)	12 47	7 36	4 49	2 83	1 83	1 22	0 83	0 57	0 41	0 29	0 21

If resistance is not specified, replace inner or outer ambient temperature sensor

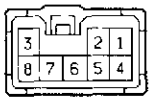

Connector "A"

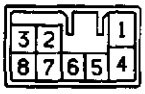

Connector "B"

S 8 2 GS 8 2

2. INSPECT ACCESSORY METER

Disconnect connectors from the accesory meter and inspect connectors on wire harness side as shown in the chart.

Check for	Tester connection	Condition		Specified value
Continuity	A-1 — Ground	Constant		Continuity
	B-8 — Ground	Constant		Continuity
Resistance	B-1 — B-4	Sensor temperature (Inner No.2)		See STEP 1 of Thermometer System on page BE-69
	B-2 — B-3	Sensor temperature (Inner No 1)		
	B-5 — B-6	Sensor temperature (Outer)		
Voltage	A-3 — Ground	Light control switch position	OFF	No voltage
			TAIL or HEAD	Battery voltage
	B-7 — Ground	Ignition switch position	OFF	No voltage
			ACC or ON	Battery voltage

If circuit is specified, replace the accessory meter

If circuit is not specified, refer to step 1 of Thermometer System and inspect circuits connected to other parts

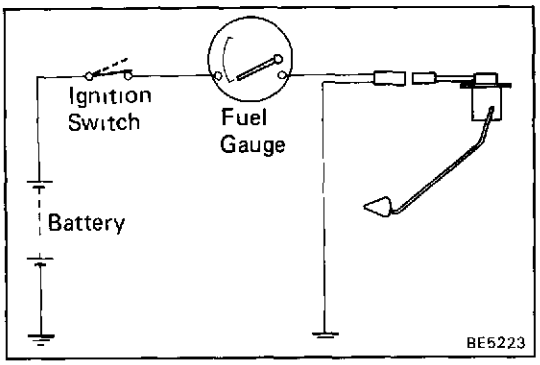

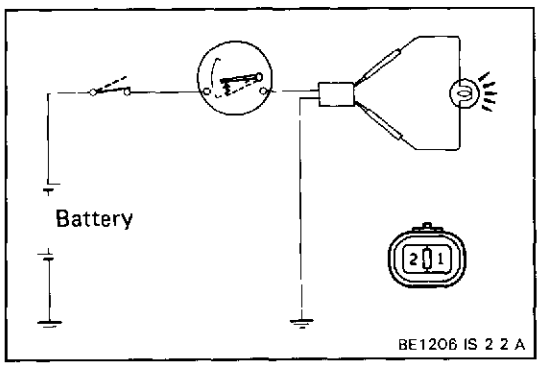

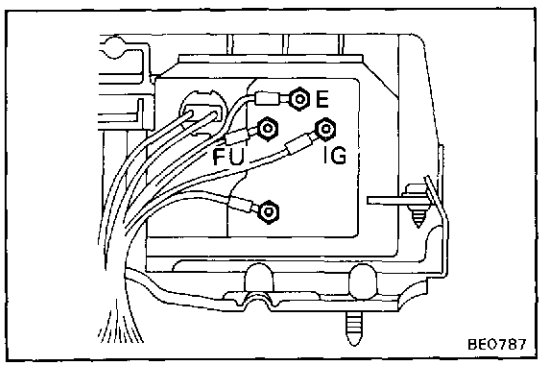

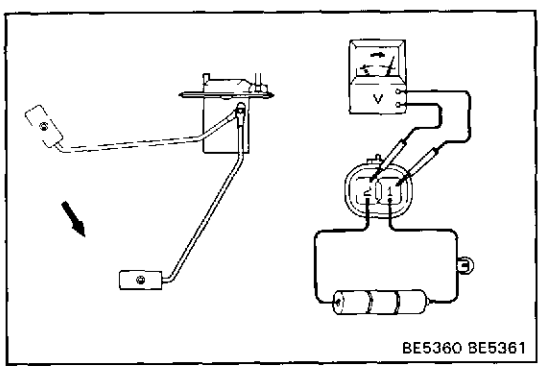

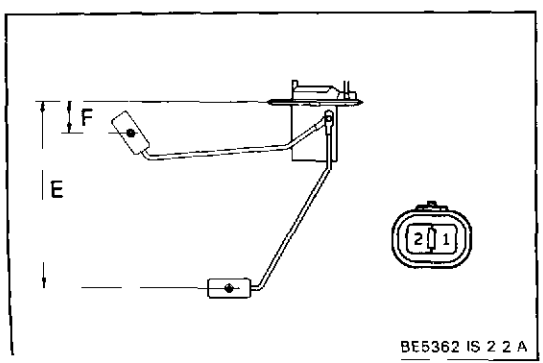

SUB FUEL GAUGE SYSTEM

1. INSPECT RECEIVER GAUGE

(Operation)

(a) Disconnect the connector from the sender gauge

(b) Turn the ignition switch ON, check that the receiver geuge needle indicates EMPTY.

(c) Connect teminals 1 and 2 on the wire harness side connector through a 3.4 W test bulb.

(d) Turn the ignition switch ON, check that the bulb lights up and receiver gauge needle moves toward the full side.

HINT: Because of the silicon oil in the gauge, it will take a short time for the needle stabilize.

If operation is not as specifiedm inspect the receiver gauge resistance.

(Resistance)

Measure the resistance between terminals.

Between terminals	Resistance (Ω)
IG – FU	Approx. 86
FU – E	Approx. 155
IG – E	Approx. 241

If resistance velue is no as specified, replace the receive gauge.

2. INSPECT SENDER GAUGE

(Operation)

(a) Connect a series of three 1.5 V dry cell batteries.

(b) Connect the positive (+) lead from the dry cell ba teries to terminal 2 athrough 2.4 W test bulb and th negaive (–) lead to teminal 1.

(c) Check that the voltage reises between teminals 1 a 2 as the float is moved from the top to bottom p sition.

(Resistance)

Measure the resistance between termianls 1 and 2 for ea flat position.

Float position mm (in.)		Resistance (Ω)
F	Approx 76 7 (3 020)	Approx. 3
E	Approx 302 4 (11 905)	Approx 110

If resistance value is not as specified, replace the sen gauge.

DEFOGGER SYSTEM

Parts Location

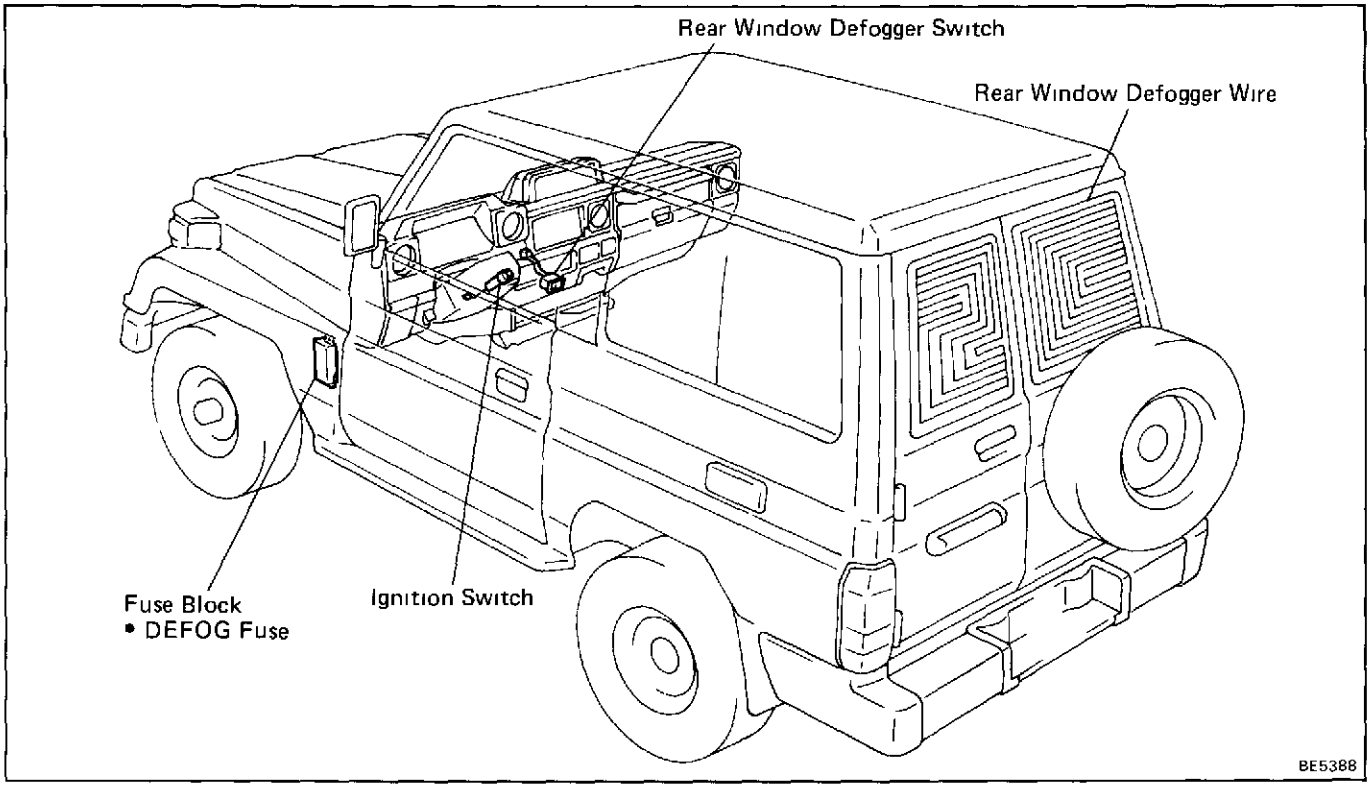

Wiring and Connector Diagrams

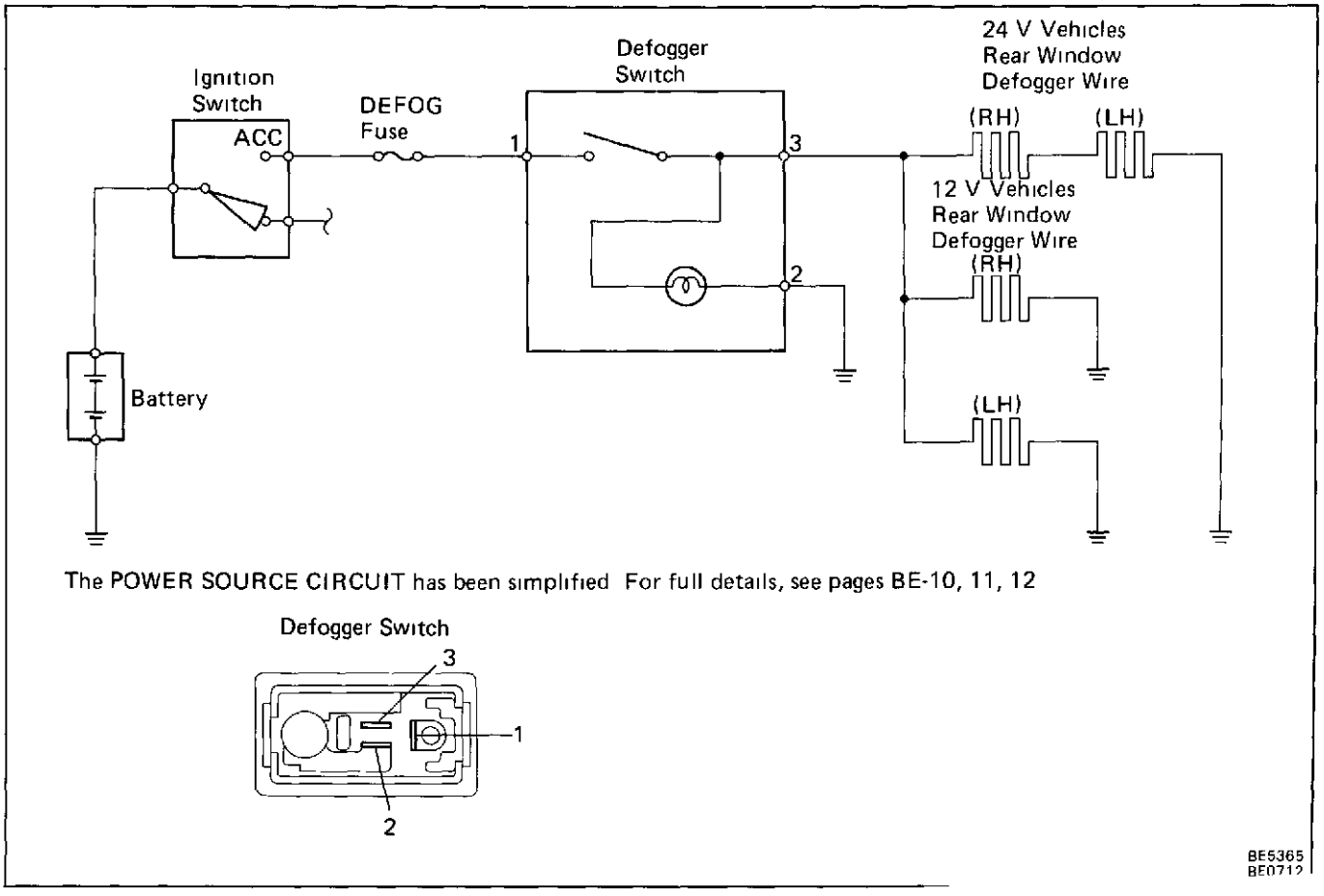

The POWER SOURCE CIRCUIT has been simplified For full details, see pages BE-10, 11, 12

BE5365
BE0712

Troubleshooting

Problem	Possible cause	Remedy	Page
Rear window defogger system do not operate	DEFOG fuse blown	Replace fuse and check for short	BE 3
	Defogger switch faulty	Check switch	BE-72
	Defogger wire broken	Check wires	BE-72
	Wiring or ground faulty	Repair as necessary	

Parts Inspection

1. **INSPECT DEFOGGER SWITCH (Continuity)**

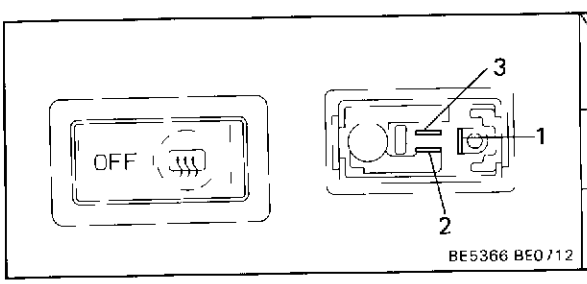

Terminal / Switch position	1	2	3
OFF		○	○
ON	○	○	○

If continuity is not as specified, check the bulb or replace the switch

2. **INSPECT DEFOGGER WIRES**

NOTICE:

- **When cleaning the glass, use a soft, dry cloth, and wipe the glass in the direction of the wire. Take care not to damage the wires.**
- **Do not use detergents or glass cleaners with abrasive ingredients.**
- **When measuring voltage, wind a piece of tin foil around the top of the negative (−) probe and press the foil against the wire with your finger as shown.**

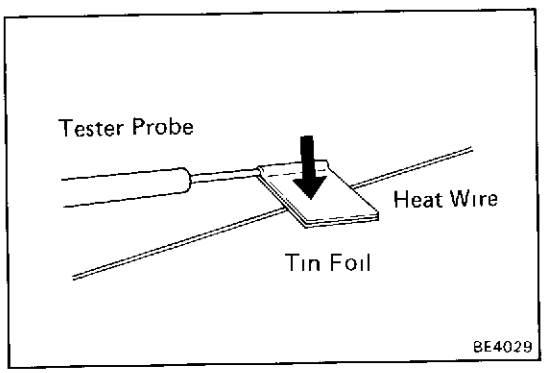

(Wire Breakage)

(a) Turn the ignition switch ON.

(b) Push in the defogger switch

(c) Inspect the voltage at the center of each heat wire as shown.

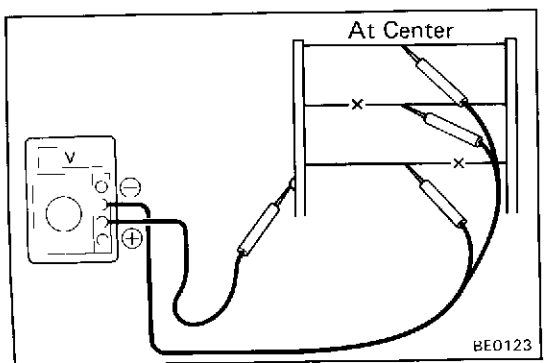

Voltage	Criteria
Approx. 5 V	Okey (No break in wire)
Approx. 10 V or 0 V	Broken wire

HINT: If there is 10 V, the wire is broken between the center of the wire and positive (+) end. If there is no voltage, the wire is broken between the center of the wire and ground

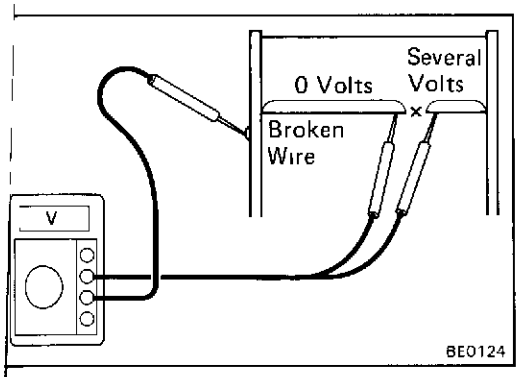

(Wire Breakage Point)

(a) Place the voltmeter positive (+) lead against the defogger positive (+) terminal.

(b) Place the voltmeter negative (−) lead with the foil strip against the heat wire at the positive (+) terminal end and slide it toward the negative (−) terminal end.

(c) The point where the voltmeter deflects from zero to several volts is the place where the heat wire is broken.

HINT: If the heat wire is not broken, the voltmeter indicates 0 volts at the positive (+) end of the heat wire but gradually increases to about 12 volts as the meter probe is moved to the other end.

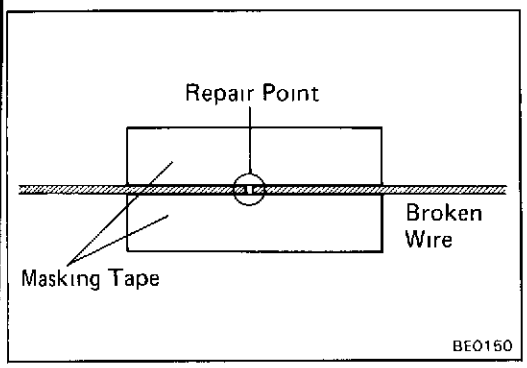

3. REPAIR DEFOGGER WIRES

(a) Clean the broken wire tips with a grease, wax and silicone remover.

(b) Place the masking tape along both sides of the wire to be repaired

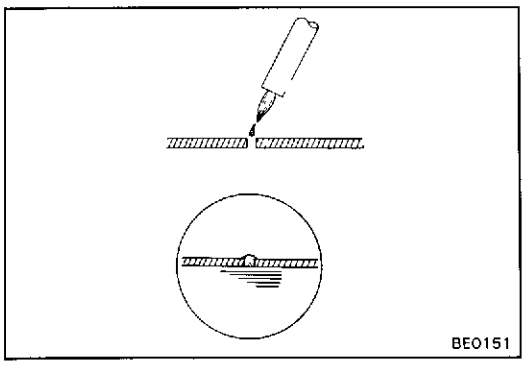

(c) Throughly mix the repair agent (Dupont paste No.4817 or equivalent).

(d) Using a fine tip brush, apply a small amount to the wire.

(e) After a few minutes, remove the masking tape.

(f) Allow the repair to stand at least 24 hours

POWER WINDOW CONTROL SYSTEM

Parts Location

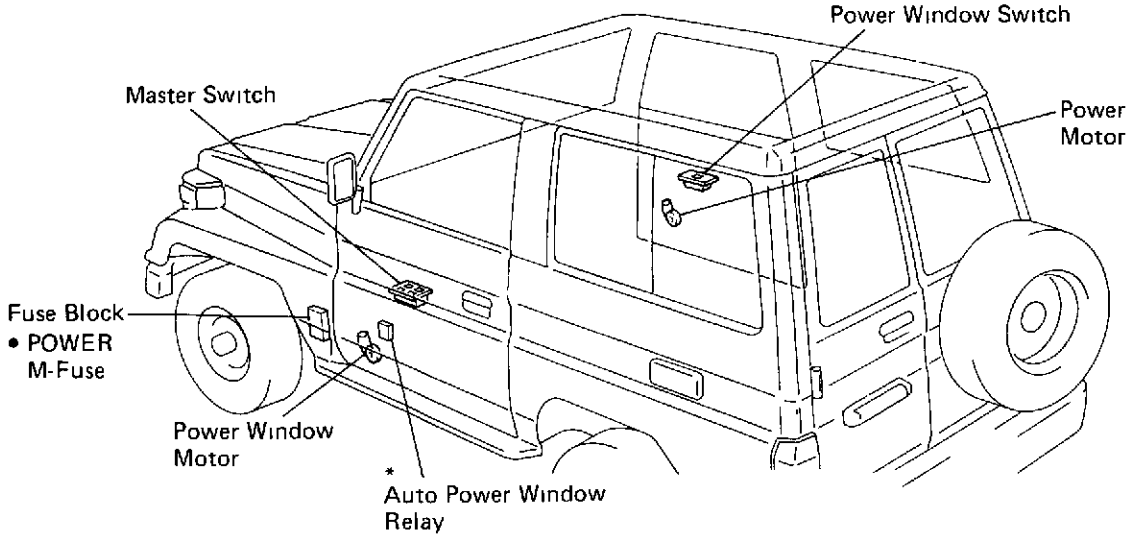

* Trim Type or Armrest Type (24 V)

BE5314

Wiring and Connector Diagrams

Trim Type

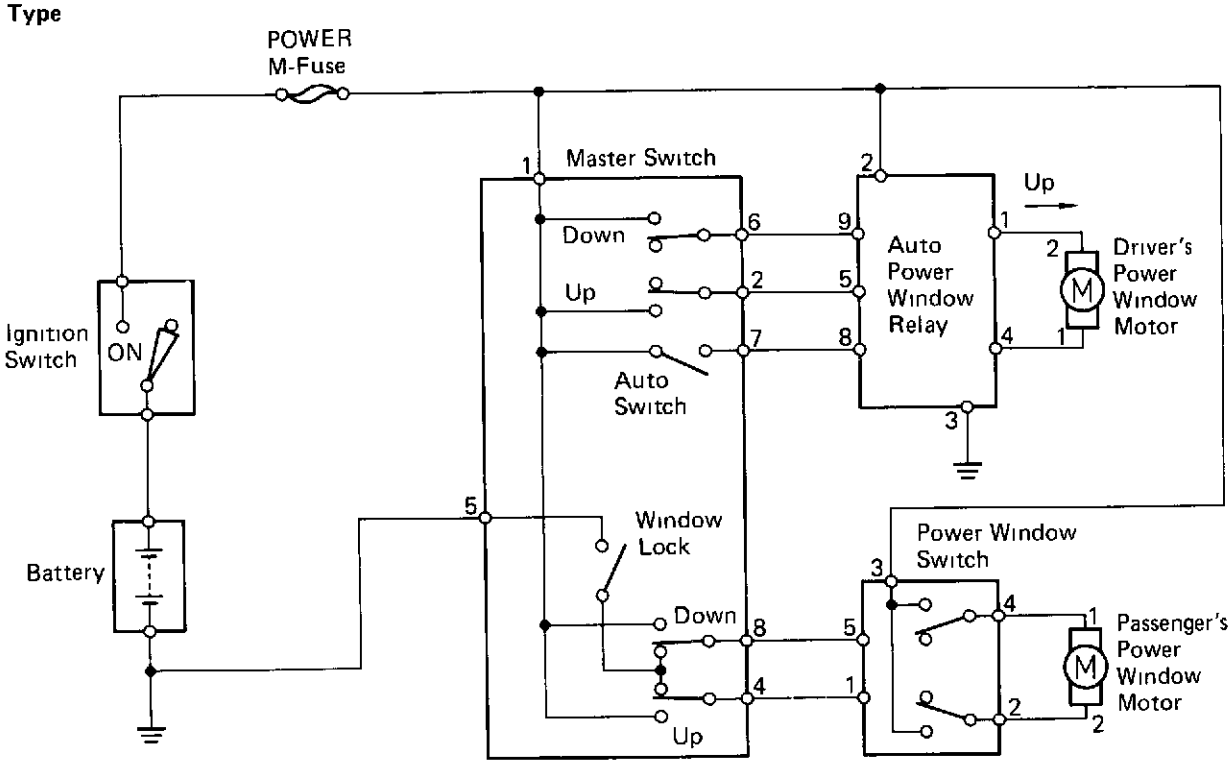

Master Switch

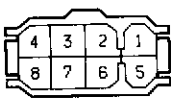

Power Window Switch

Auto Power Window Relay

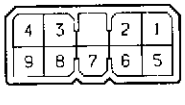

Power Window Motor

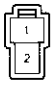

The POWER SOURCE CIRCUIT has been simplified For full details, see pages BE-10, 11, 12

GA82AG52G92

Armrest Type (24 V)

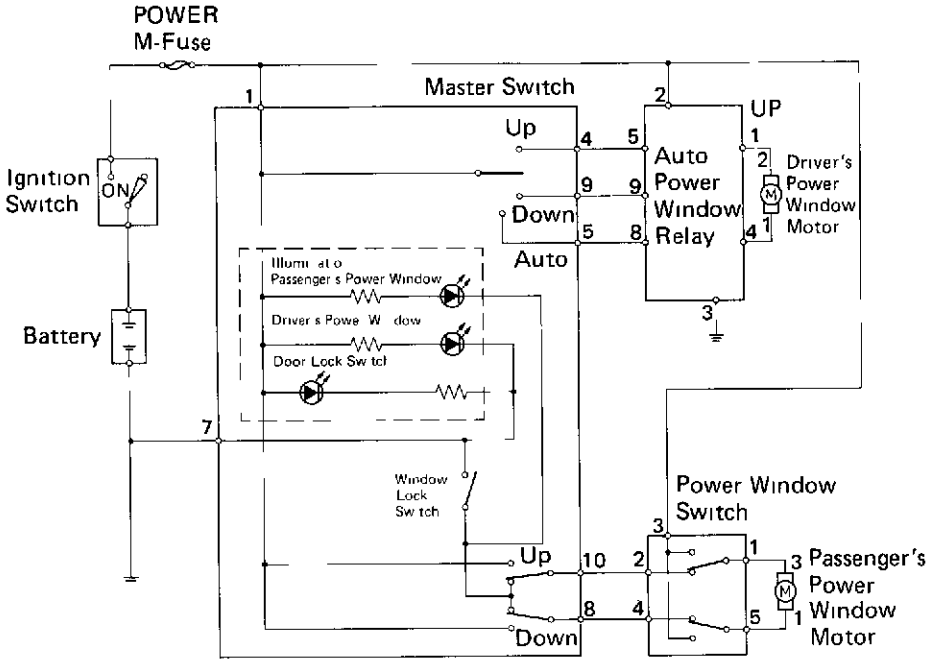

The POWER SOURCE CIRCUIT has been simplified. For full details, see pages BE-10, 11, 12

Master Switch

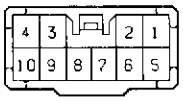

Power Window Switch

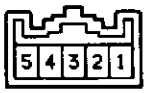

Auto Power Window Relay

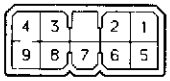

Power Window Motor

Armrest Type (12 V)

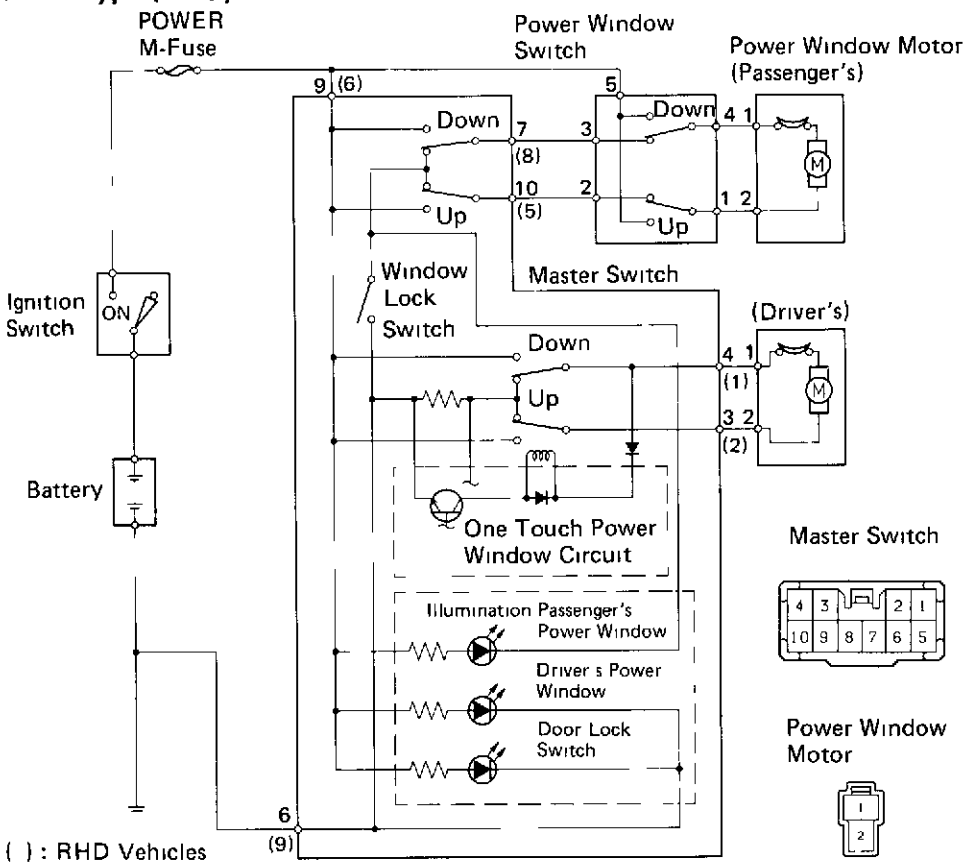

Master Switch

Power Window Switch

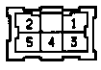

Power Window Motor

BE5316
S 10 2 S 5 2 A G 9 2 H 2 2
BE5317
S 10 2 G 5 2 A
H 2 2

The POWER SOURCE CIRCUIT has been simplified. For full details, see pages BE-10, 11, 12

Troubleshooting

Problem	Possible cause	Remedy	Page
Power window does not operate at all	POWER fuse blown Wiring or ground faulty	Replace fuse and check for short Repair as necessary	BE-4
One-touch power window does not operate	Power window master switch faulty *Auto power window relay faulty *Wiring faulty	Check switch Check relay Repair as necessary	BE-76 BE-81
Driver's power window does not operate	Power window master switch faulty *Auto power window relay faulty Power window motor faulty Wiring faulty	Check switch Check relay Check motor Repair as necessary	BE-76 BE-81 BE-80
Passenger's power window does not operate	Power window switch faulty Power window master switch faulty Power window motor faulty Wiring faulty	Check switch Check switch Check motor Repair as necessary	BE-80 BE-76 BE-80

* Trim Type or Armrest Type (24 V) Power Window Switch

Parts Inspection

1. **INSPECT SWITCHES (Master Switch/Continuity)**

Trim Type or Armrest Type (24 V)

Trim Type

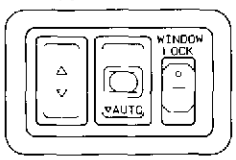

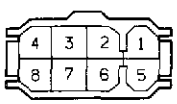

Armrest Type (24 V)

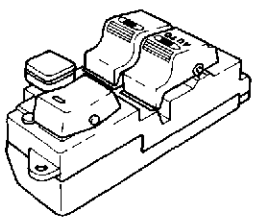

Connector "A"

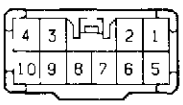

Connector "B"

BE5318 GA 8 2 A
S 10 2
BE2877 GA 2 2 C

Window operation		Driver's				Passenger's			
Terminal	Trim Type	1	2	6	7	1	4	5	8
Switch position	Armrest Type (24 V)	1	4	9	5	1	10	7	8
Manual (Window unlock)	UP	○—○				○—○		○—○	
	OFF						○—○		○—○
	DOWN	○———○				○————	○—○		
Manual (Window lock)	UP	○—○				○—○			
	OFF								
	DOWN	○———○				○————			
AUTO	OFF								
	DOWN	○———○———○							

If continuity is not as specified, replace the master swit

Armrest type (12 V)

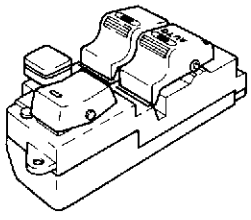

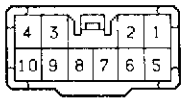

BE2877
S 10 2

Window operation		Terminal / Switch position	Driver's				Passenger's			
		LHD	3	4	6	9	6	7	9	10
		RHD	2	1	9	6	9	8	6	5
Window unlock	UP		○	○	○	○	○	○	○	○
	OFF		○	○	○		○	○		○
	DOWN		○		○	○		○	○	
Window lock	UP		○	○	○	○			○	○
	OFF		○	○	○			○		○
	DOWN		○		○	○		○	○	

If continuity is not as specified, replace the switch.

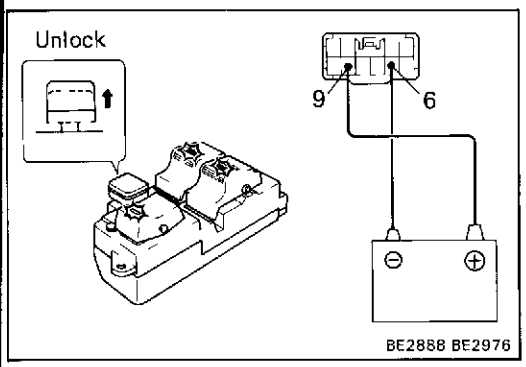

BE2888 BE2976

(Armrest Type Master Switch: Illumination)

LHD

(a) Set the window lock switch to the unlock position

(b) Connect the positive (+) lead from the battery to terminal 9 and the negative (−) lead to terminal 6, check that all the illuminations light up

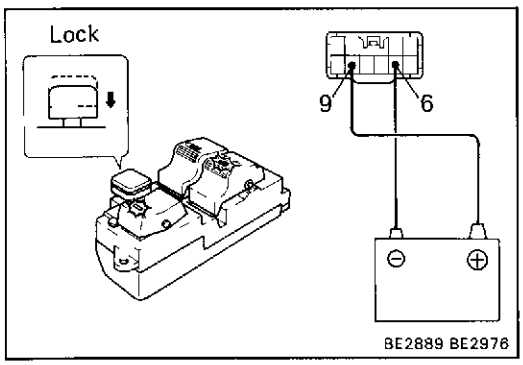

BE2889 BE2976

(c) Set the window lock switch to the lock position, check that all the passenger's power window switch illumination goes out

If operation is not as specified, replace the master switch.

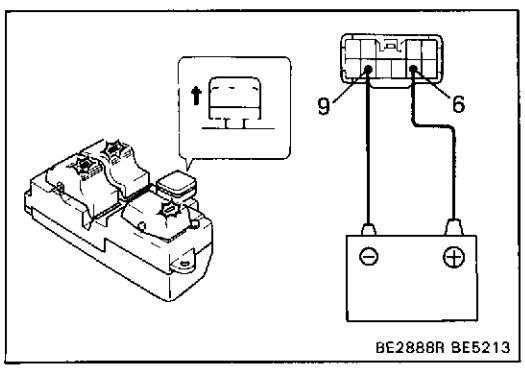

BE2888R BE5213

RHD

(a) Set the window lock switch to the unlock position.

(b) Connect the positive (+) lead from the battery to terminal 6 and the negative (−) lead to terminal 9, check that all the illuminations light up.

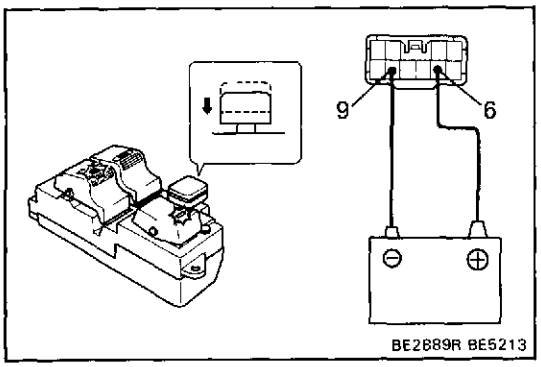

(c) Set the window lock switch to the lock position, check that the passenger's power window switch illumination goes out.

If operation is not as specified, replace the master switch.

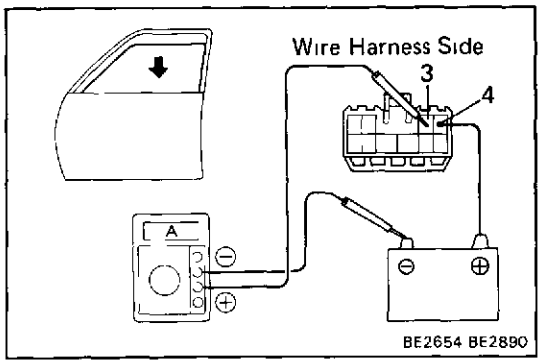

(Armrest Type Mastor Switch (12 V): One Touch Power Window System)

LHD

Inspection using an ammeter:

(a) Disconnect the connector from the master switch

(b) Connect the positive (+) lead from the ammeter to terminal 3 on the wire harness side connector and the negative (−) lead to negative terminal of the battery.

(c) Connect the positive (+) lead from the battery to terminal 4 on the wire harness side connector

(d) As the window goes down, check that the current flows approximately 7 A.

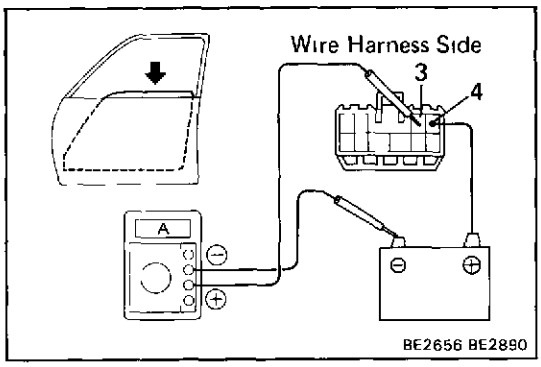

(e) Check that the current increases approximately 14 A or more when the window stops going down.

HINT: The circuit breaker opens some 4 — 40 secon after the window stops going down, so the check mu be made before the circuit breaker operates

If operation is as specified, replace the master switch

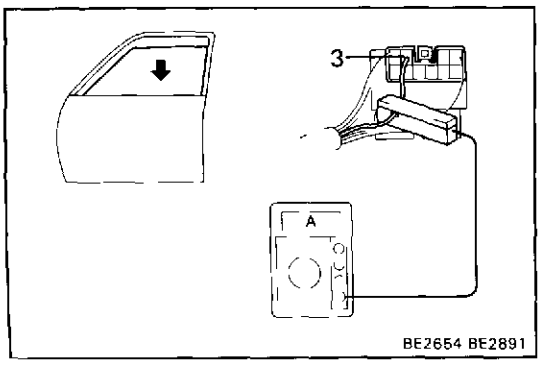

Inspection using an ammeter with a current-measur probe:

(a) Remove the master switch with connector connec

(b) Attach a current-measuring probe to terminal 3 of wire harness.

(c) Turn the ignition switch ON and set the power dow switch in the down position.

(d) As the window goes down, check that the cu flows approximately 7 A

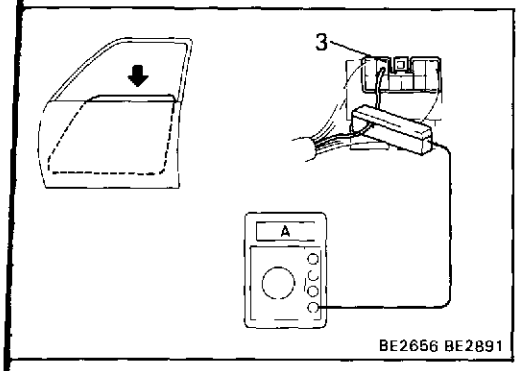

(e) Check that the current increases approximately 14.5 A or more when the window stops going down.

HINT: The circuit breaker opens some 4 — 40 seconds after the window stops going down, so that check must be made before the circuit breaker operates.

If operation is as specified, replace the master switch.

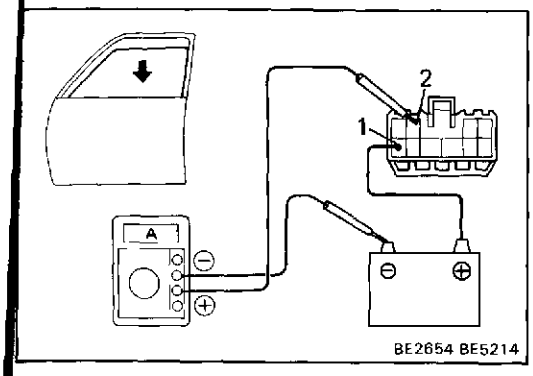

RHD

Inspection using an ammeter:

(a) Disconnect the connector from the master switch.

(b) Connect the positive (+) lead from the ammeter to terminal 2 on the wire harness side connector and the negative (—) lead to negative terminal of the battery.

(c) Connect the positive (+) lead from the battery to terminal 1 on the wire harness side connector.

(d) As the window goes down, check that the current flows approximately 7 A.

(e) Check that the current increases approximately 14.5 A or more when the window stops going down.

HINT. The circuit breaker opens some 4 — 40 seconds after the window stops going down, so the check must be made before the circuit breaker operates.

If operation is as specified, replace the master switch.

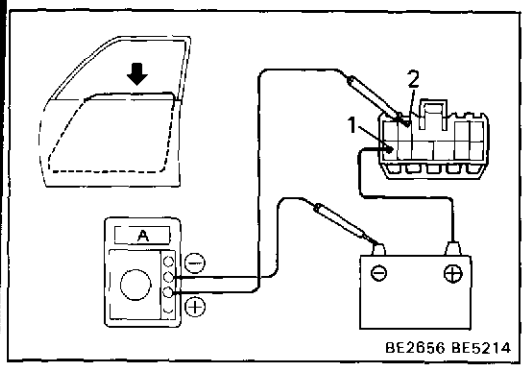

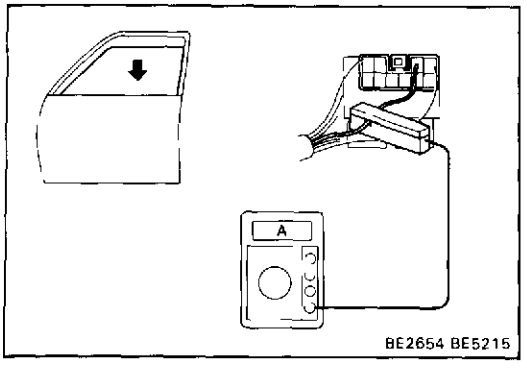

Inspection using an ammeter with a current-measuring probe:

(a) Remove the master switch with connector connected.

(b) Attach a current-measuring probe to terminal of the wire harness.

(c) Turn the ignition switch ON and set the power window switch in the down position.

(d) As the window goes down, check that the current flows approximately 7 A.

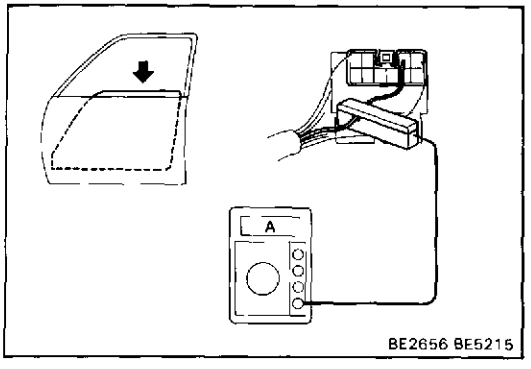

(e) Check that the current increases approximately 14.5 A or more when the window stops going down.

HINT: The circuit breaker opens some 4 — 40 seconds after the window stops going down, so that check must be made before the circuit breaker operates.

If operation is as specified, replace the master switch.

(Power Window Switch/Continuity)

Trim Type

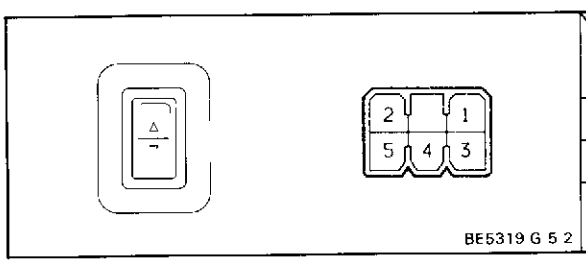

Terminal / Switch position	1	2	3	4	5
UP	○	○		○	○
OFF	○		○	○	○
DOWN	○		○		
		○			○

If continuity is not as specified, replace the switch

Armrest Type

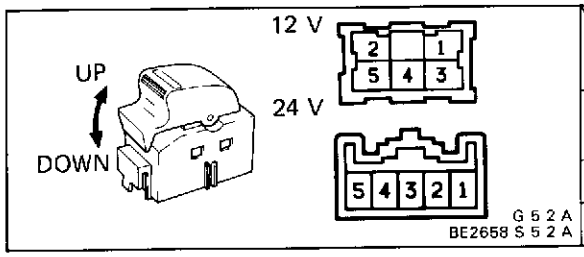

Terminal / Switch position	12 V / 24 V	1	2	3	4	5
	12 V	1	2	3	4	5
	24 V	1	2	4	5	3
UP		○				○
				○	○	
OFF		○	○	○	○	
DOWN		○	○		○	○

If continuity is not as specified, replace the switch.

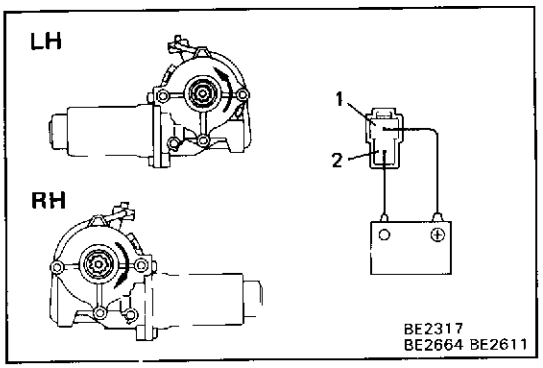

2. INSPECT POWER WINDOW MOTOR

(Motor Operation)

(a) Connect the positive (+) lead from the battery to terminal 1 and the negative (−) lead to terminal 2, check that the motor turns downward

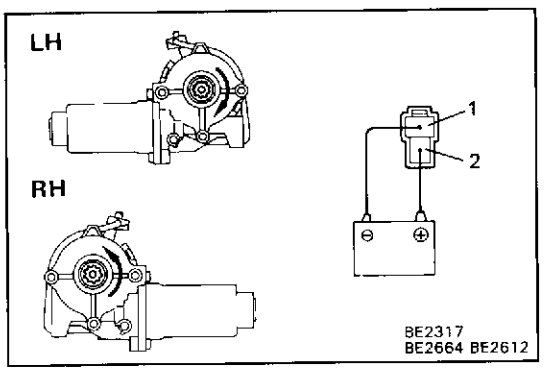

(b) Reverse the polarity, check that the motor turn upward

If operation is not as specified, replace the motor.

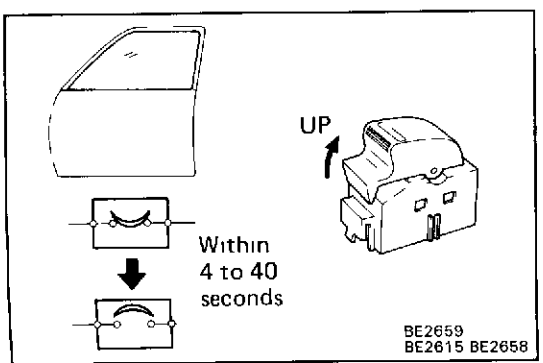

(Circuit Breaker/Operation)

(a) With the window in the full closed position, hold power window switch in "UP" position and check there is a circuit breaker operation noise within 40 seconds.

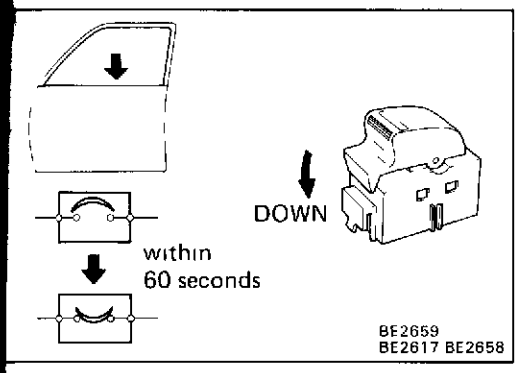

(b) With the window in the full closed position, hold the switch in "DOWN" and check that the window begins to descend within 60 seconds

If operation is not as specified, replace the motor.

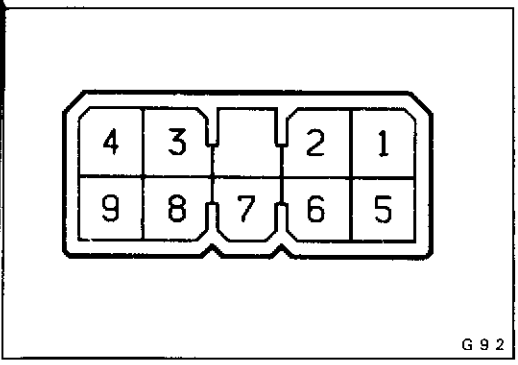

3. Trim Type or Armrest Type (24 V)
INSPECT AUTO POWER WINDOW RELAY

(Relay Circuit)

Disconnect the connector from the relay and inspect the connector on the wire harness side as shown in the chart.

Check for	Tester connection	Condition		Specified value
Continuity	1 — 4	Constant		Continuity
	3 — Ground	Constant		Continuity
Voltage	2 — Ground	Ignition switch position	LOCK or ACC	No voltage
			ON	Battery voltage
	5 — Ground	Master switch position when ignition switch turned ON (Driver's switch)	OFF or DOWN	No voltage
			UP	Battery voltage
	8 — Ground	Master switch position when ignition switch turned ON (AUTO switch)	OFF	No voltage
			DOWN	Battery voltage
	9 — Ground	Master switch position when ignition switch turned ON (Driver's switch)	OFF	No voltage
			DOWN	Battery voltage

If circuit is as specified, replace the relay.

POWER DOOR LOCK CONTROL SYSTEM

Parts Location

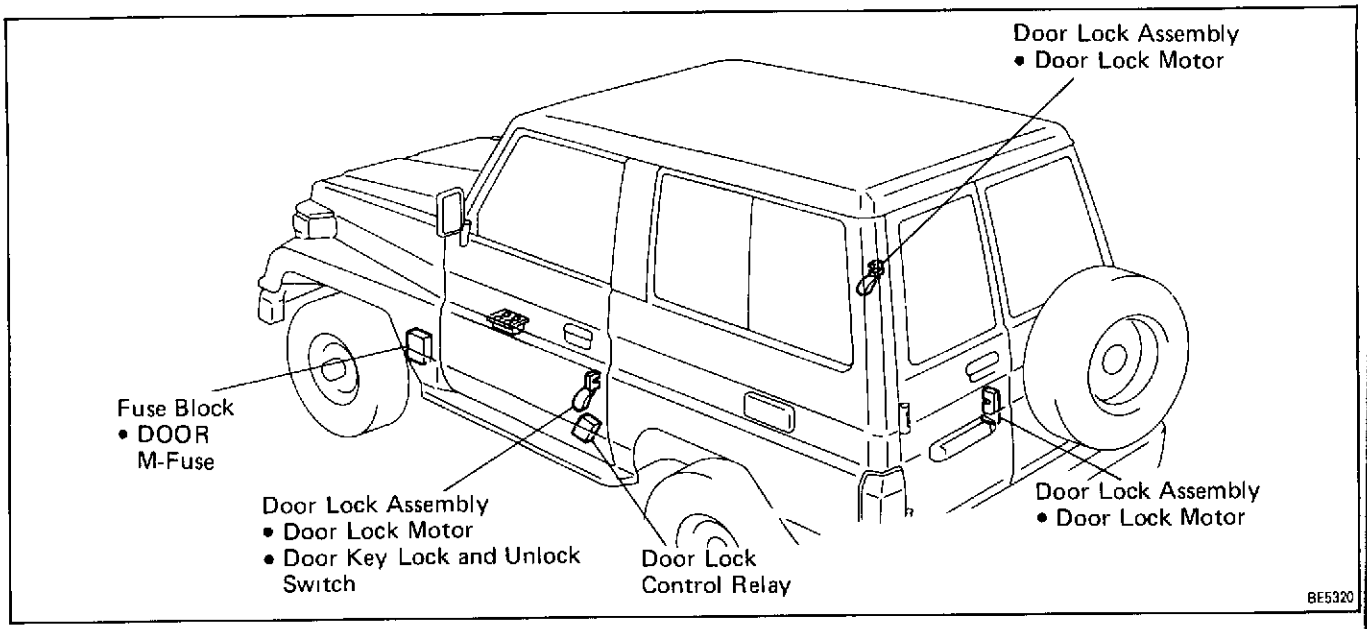

Wiring and Connector Diagrams

All Doors

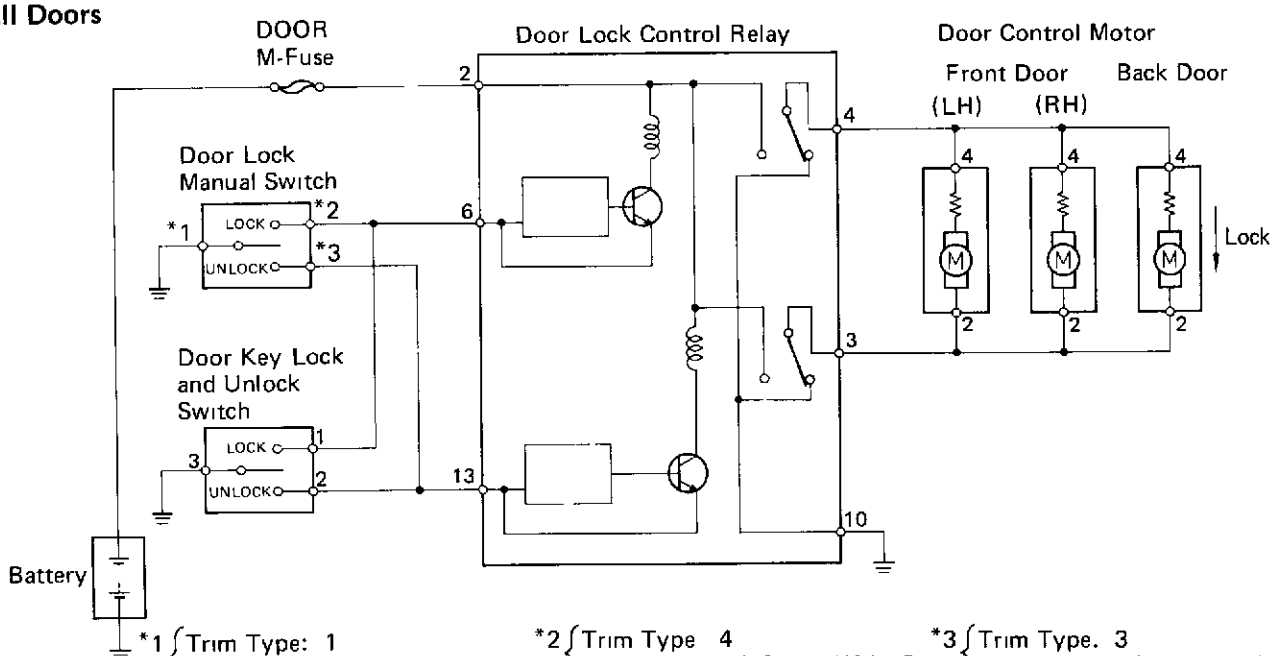

*1 { Trim Type: 1
Armrest Type (12V LHD) 6
Armrest Type (12V. RHD) 9
Armrest Type (24V) 7

*2 { Trim Type 4
Armrest Type (12V LHD) 2
Armrest Type (12V RHD) 3
Armrest Type (24V) 2

*3 { Trim Type. 3
Armrest Type (12V LHD) 1
Armrest Type (12V RHD) 4
Armrest Type (24V) 3

Door Lock Manual Switch

(Trim Type)

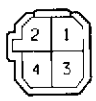

(Armrest Type)

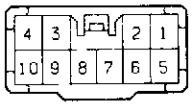

Door Key Lock and Unlock Switch

Door Lock Motor

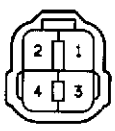

Door Lock Control Relay

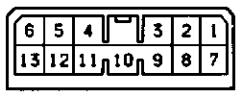

The POWER SOURCE CIRCUIT has been simplified For full details, see pages BE 10, 11, 12.

Back Door

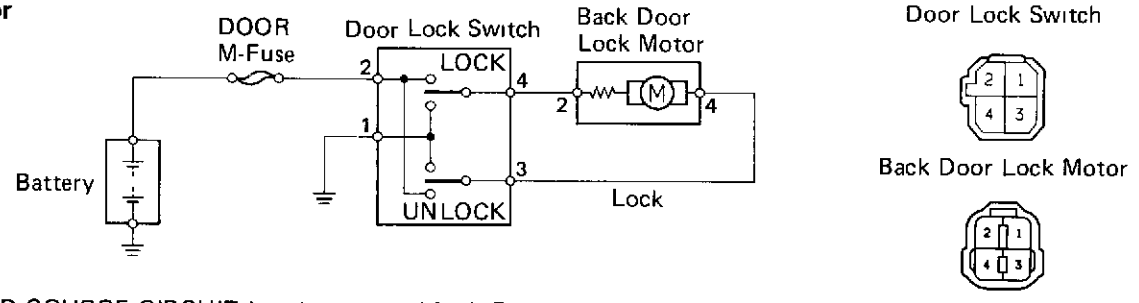

The POWER SOURCE CIRCUIT has been simplified For full details, see pages BE-10, 11, 12

GA 4 2
BE5322 IS 4 2 B

Troubleshooting

Problem	Possible cause	Remedy	Page
Door lock system does not operate at all	DOOR fuse blown Door lock motor faulty Door lock control relay faulty Wiring or ground faulty	Replace fuse and check for short Check motor Check relay Repair as necessary	BE-4 BE-84 BE-86
Door lock system does not operate by manual switch	Door lock manual switch faulty Wiring faulty	Check switch Repair as necessary	BE-83
Door lock system does not operate by door key	Door key lock and unlock switch faulty Wiring faulty Door lock link disconnected	Check switch Repair as necessary Connect link	BE-84

Parts Inspection

1. INSPECT SWITCHES (Door Lock Manual Switch/Continuity)

Trim Type

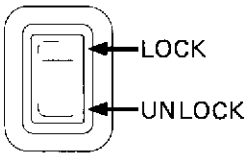

BE5323 GA 4 2

Terminal / Switch position	1	2	3	4
LOCK	○		○	
		○		○
OFF				
UNLOCK	○			○
		○	○	

If continuity is not as specified, replace the switch

Armrest Type (12 V)

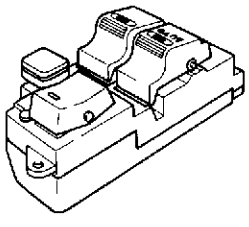

BE2877 S 10 2

Terminal / Switch position	LHD / RHD	1 / 4	2 / 3	5 / 10	6 / 9
LOCK		○		○	
			○		○
OFF					
UNLOCK		○			○
			○	○	

If continuity is not as specified, replace the switch

Armrest Type (24 V)

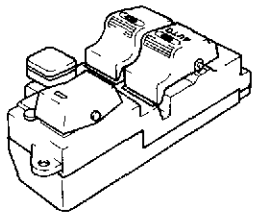

BE2877 S 10 2

Terminal / Switch position	2	3	7
LOCK	○		○
OFF			
UNLOCK		○	○

If continuity is not as specified, replace the switch

(Door Key Lock and Unlock Switch/Continuity)

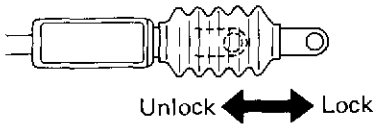

BE2170 IU 3 2

Terminal / Switch position	1	2	3
LOCK	○		○
OFF			
UNLOCK		○	○

If continuity is not as specified, replace the switch.

2. INSPECT DOOR LOCK MOTOR
(Motor Operation)

Front Door

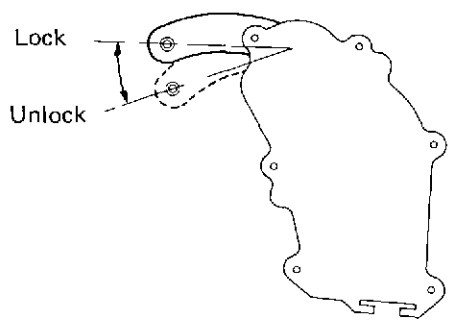

Back Door

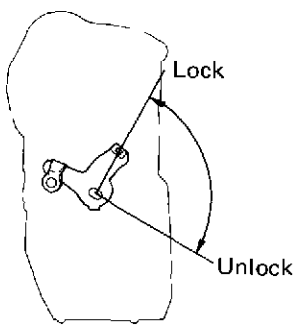

BE5091 BE5

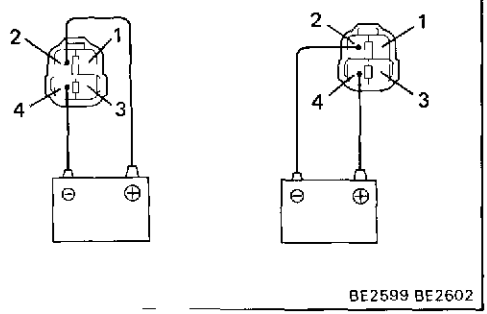

BE2599 BE2602

(a) Connect the positive (+) lead from the battery to t
minal 2 and the negative (−) lead to terminal 4, ch
that the door lock link moves to UNLOCK positi

(b) Remove the polarity, check that the door lock
move to LOCK position.

If operation is not as specified, replace the door lock
sembly.

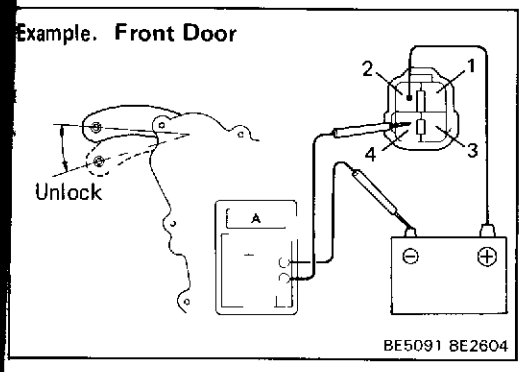

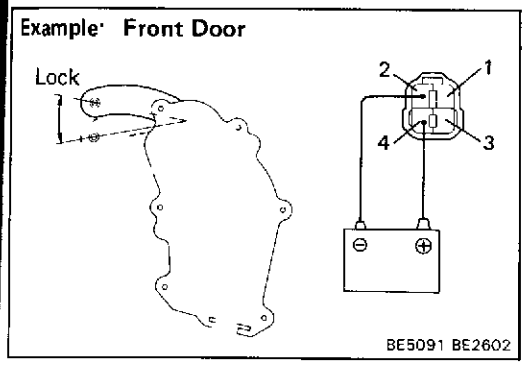

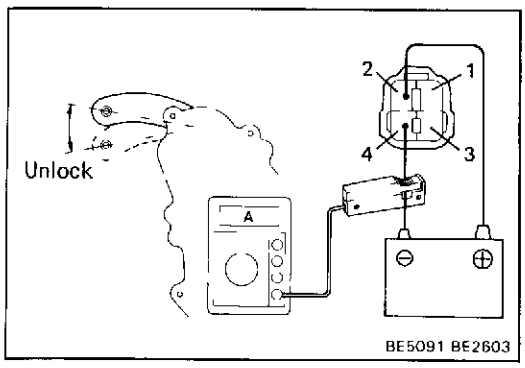

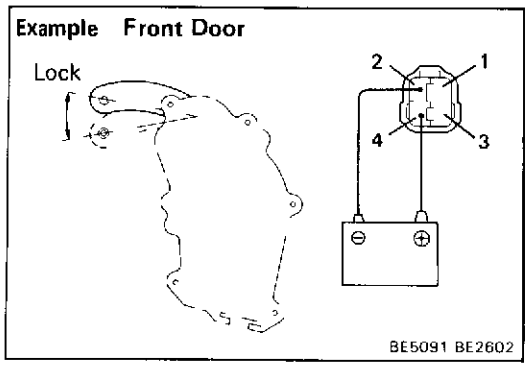

(PTC Thermistor Operation)

Inspection using an ammeter.

HINT: The number in brackets ( ) applies to 24 V vehicles.

(a) Connect the positive (+) lead from the battery to terminal 2.

(b) Connect the positive (+) lead from the ammeter to terminal 4 and the negative (—) lead to battery negative (—) terminal, check that the current changes from approx. 3.2 (2) A to less than 0.5 A with 20 to 70 seconds.

(c) Disconnect the leads from terminals.

(d) Approximately 60 seconds later, connect the positive (+) lead from the battery to terminal 4 and the negative (—) lead to terminal 2 check that the door lock moves to LOCK position.

If operation is not as specified, replace the door lock assembly.

Inspection using an ammeter with a current-measuring probe.

HINT. The number in brackets ( ) applies to 24V vehicles

(a) Connect the positive (+) lead from the battery to terminal 2 and the negative (—) lead to terminal 4.

(b) Attach a current-measuring probe to either the positive (+) lead or the negative (—) lead, check that the current changes from approx 3.2 (2) A to less than 0.5 A within 20 to 70 seconds

(c) Disconnect the leads from terminals

(d) Approximately 60 seconds later, reverse the polarity, check that the door lock moves to LOCK position.

If operation is not as specified, replace the door lock assembly.

HINT. Perform inspection of PTC thermistor operation of other door lock motors the same way as for the front door

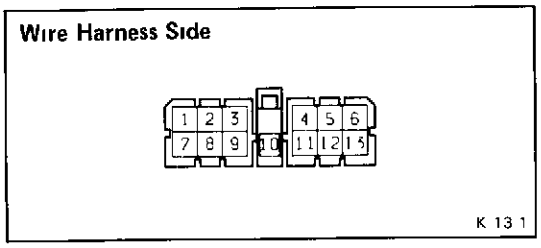

3. INSPECT DOOR LOCK CONTROL RELAY (Relay Circuit)

Disconnect the connector from the relay and inspect the connector on the wire harness side as shown in the chart.

Check for	Tester connection	Condition		Specified value
Continuity	6—Ground	Door key lock and unlock switch position	OFF or Unlock (Door key free or turned to Unlock)	No continuity
			Lock (Door key turned to LOCK)	Continuity
		Door lock manual switch position	OFF or Unlock	No continuity
			Lock	Continuity
	10 — Ground	Constant		Continuity
	13 — Ground	Door key lock and unlock switch position	OFF or Lock (Door key free or turned to Lock)	No continuity
			Unlock (Door key turned to Unlock)	Continuity
		Door lock manual switch position	OFF or Lock	No continuity
			Unlock	Continuity
Voltage	2 — Ground	Constant		Battery voltage

If continuity is as specified, inspect the door lock signal.

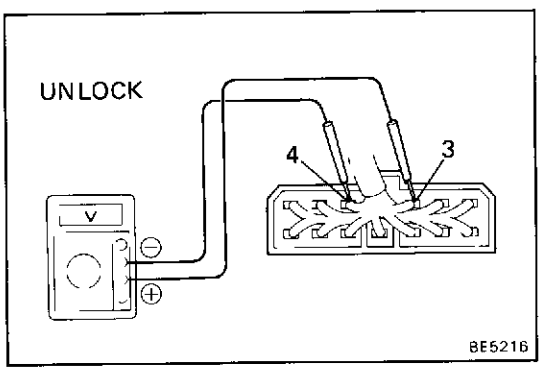

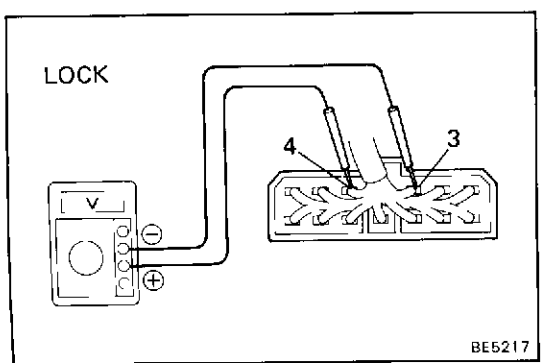

(Door Lock Signal)

HINT: When the relay circuit is as specified, inspect the door lock signal.

(a) Connect the connector to the relay.

(b) Connect the positive (+) lead from the voltmeter to terminal 3 and the negative (—) lead to terminal 4.

(c) Set the door lock control switch to UNLOCK, check that the voltage rises from 0 V to battery voltage for approximately 0.2 seconds.

(d) Reverse the polarity of the voltmeter leads

(e) Set the door lock control switch to LOCK, check that the voltage rises from 0 V to battery voltage for approximately 0.2 seconds.

If operation is not as specified, replace the relay.

SLIDING ROOF SYSTEM

Parts Location

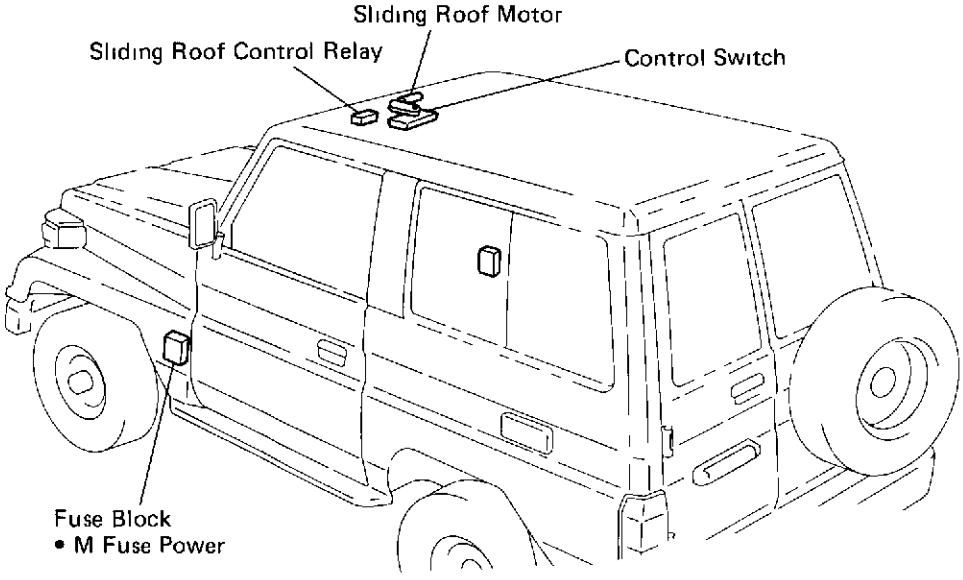

BE5324

Wiring and Connector Diagrams

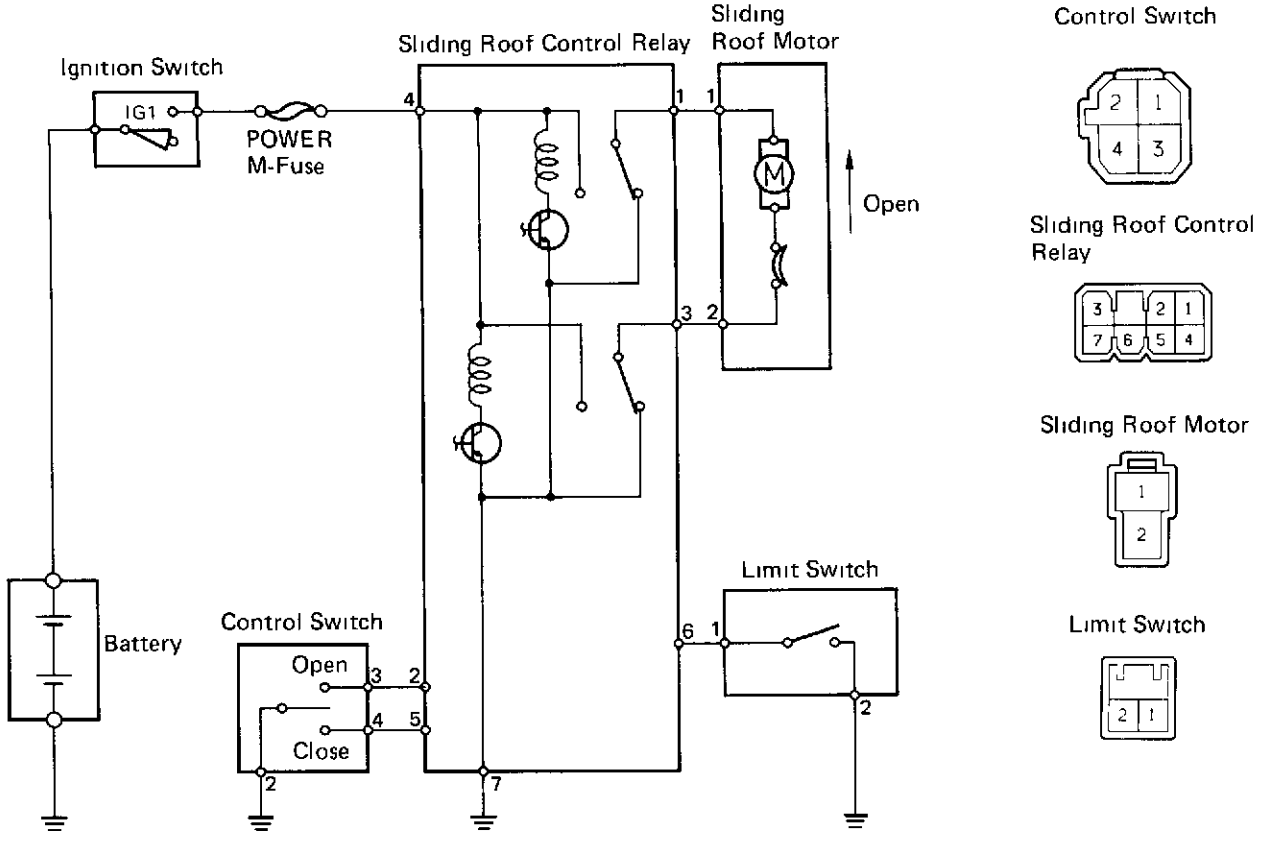

The POWER SOURCE CIRCUIT has been simplified For full details see pages BE-10, 11, 12

GA 4 2
G 7 2
H 2 2
BE5212 G 2 2

Troubleshooting

Problem	Possible cause	Remedy	Page
Sliding roof does not operate	Control switch faulty	Check switch	BE-88
	Limit switch faulty	Check switch	BE-88
	Sliding roof motor faulty	Check motor	BE-88
	Sliding roof control relay faulty	Check relay	BE-89
	Wiring faulty	Repair as necessary	

Parts Inspection

1. INSPECT SWITCHES

(Control Switch/Continuity)

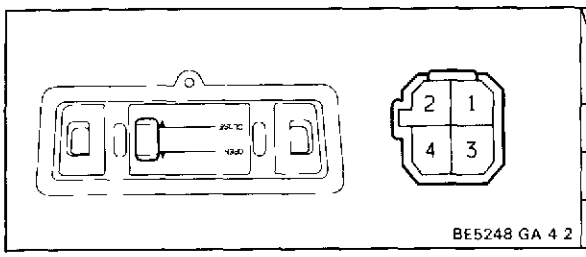

Terminal / Switch position	2	3	4
OPEN	○	○	
OFF			
CLOSE	○		○

If continuity is not as specified, replace the switch.

(Limit Switch/Continuity)

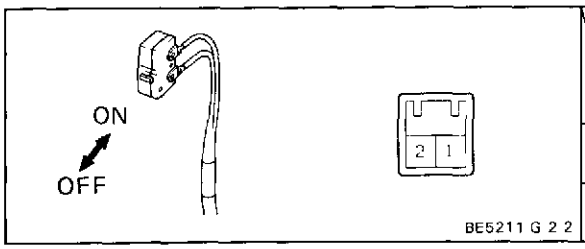

Terminal / Switch position	1	2
OFF (Switch pin released)		
ON (Switch pin pushed in)	○	○

If continuity is not as specified, replace the switch

2. INSPECT SLIDING ROOF MOTOR

(Motor Operation)

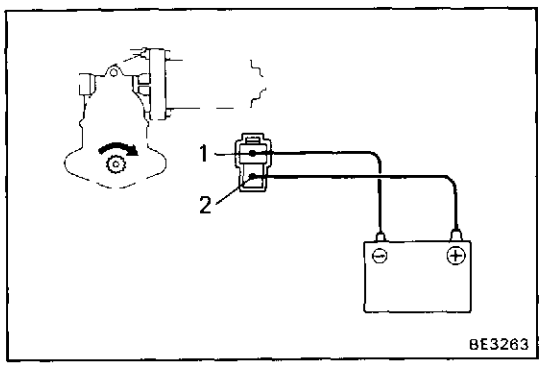

(a) Connect the positive (+) lead from the battery to terminal 2 and the negative (−) lead to terminal 1, check that the motor turns to counterclockwise (moves to the close side).

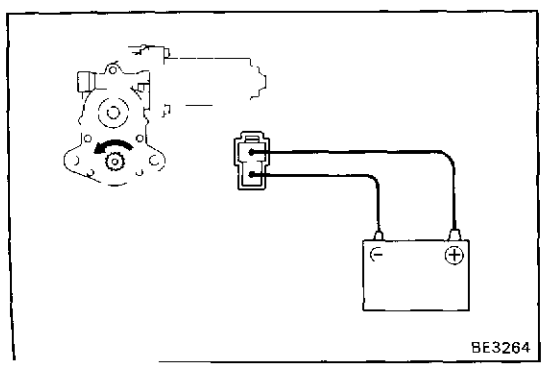

(b) Reverse the polarity, check that the motor turns clockwise (moves to the open side).

If operation is not as specified, replace the motor.

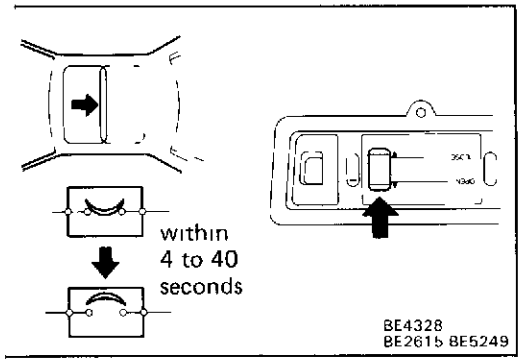

(Circuit Breaker Operation)

(a) With the sliding roof in the fully opened position, hold the sliding roof switch in "OPEN" position and check that there is a circuit breaker operation noise within 4 to 40 seconds.

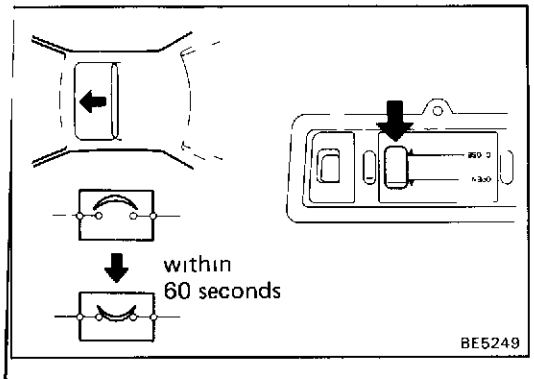

(b) With the sliding roof in fully opened position, hold the sliding roof switch in "CLOSE" position and check that the sliding roof begins to close within 60 seconds.

If operation is not as specified, replace the motor

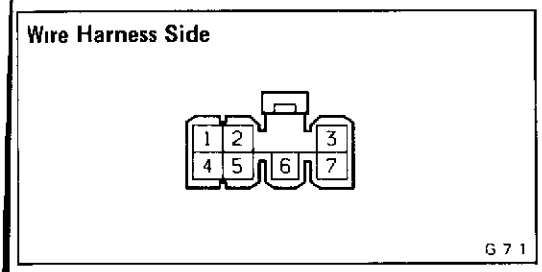

3. INSPECT SLIDING ROOF CONTROL RELAY (Relay Circuit)

Disconnect the connector from the relay and inspect the connector on the wire harness side as shown in the chart.

Check for	Tester connection	Condition		Specified value
Continuity	1 — 3	Constant		Continuity
	2 — Ground	Control switch position	OFF or CLOSE	No continuity
			OPEN	Continuity
	5 — Ground	Control switch position	OFF or OPEN	No continuity
			CLOSE	Continuity
	6 — Ground	Limit switch position	OFF [Sliding roof approx. 100 mm (3 94 in) opened]	No continuity
			ON [Except for conditions mentioned above]	Continuity
	7 — Ground	Constant		Continuity
Boltage	4 — Ground	Ignition switch position	LOOK or ACC	No voltage
			ON	Battery voltage

If circuit is as specified, replace the relay.

FUEL TRANSFER SYSTEM

Parts Location

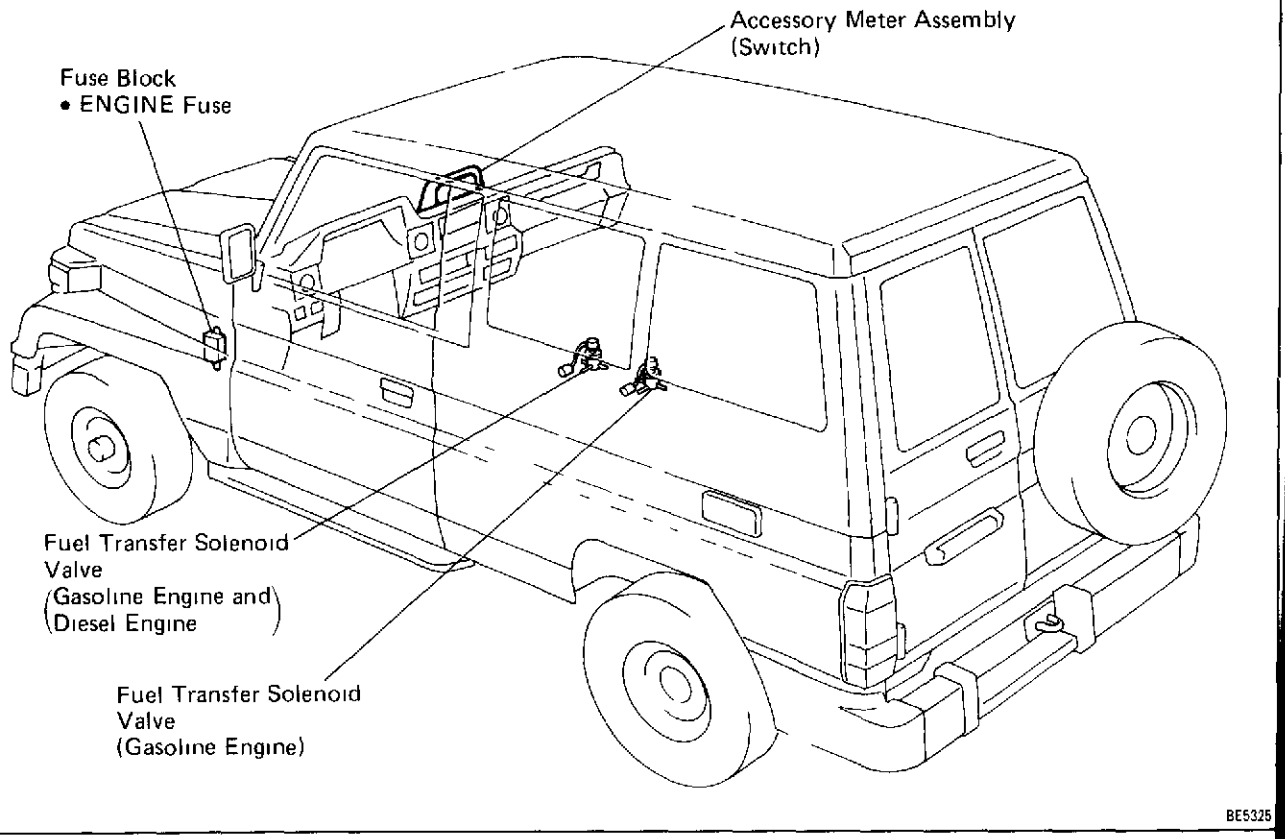

Wiring and Connector Diagrams

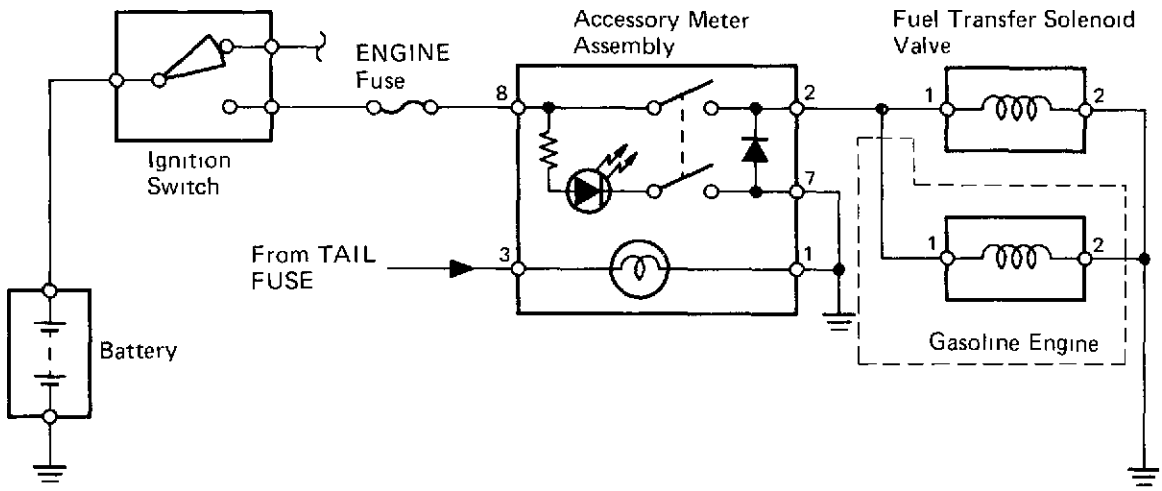

Accessory Meter Assembly

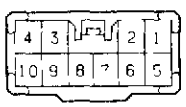

Fuel Transfer Solenoid Valve

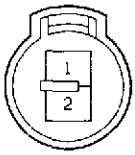

The POWER SOURCE CIRCUIT has been simplified For full details, see pages BE 10 to 12

Troubleshooting

Problem	Possible cause	Remedy	Page
Fuel Transfer System do not operate	GAUGE fuse blown	Replace fuse and check for short	BE-4
	Accessory Meter faulty	Check meter	BE-93
	Fuel transfer solenoid valve (Main and return) faulty	Check solenoid valve	BE-93
	Wiring or ground faulty	Repair as necessary	

Parts Inspection

1. **INSPECT ACCESSORY METER (Continuity)**

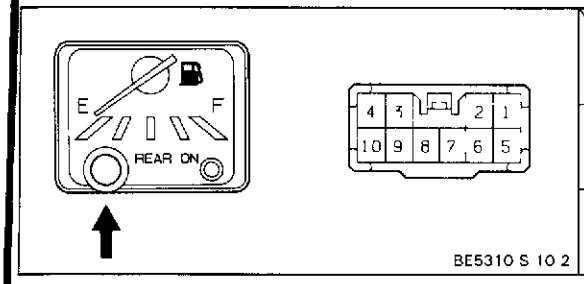

Terminal / Switch position	8	2	Illumination 1	Illumination 3
OFF				
ON	○—○			

If continuity is not as specified, check the bulb or replace the switch.

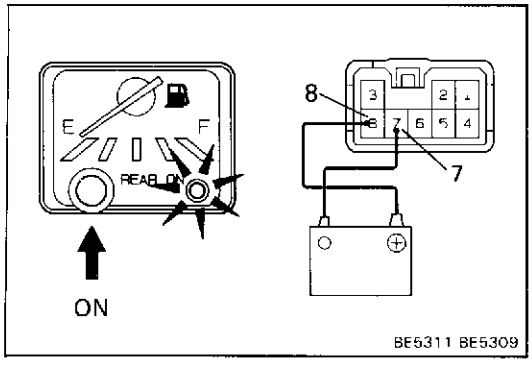

(indicator Light)

(a) Connect the positive (+) lead from the battery to terminal 8 and the negative (−) lead to terminal 7.

(b) Set the switch ON, check that the indicator light lights up

If the indicator light does not light up, replace the accessory meter.

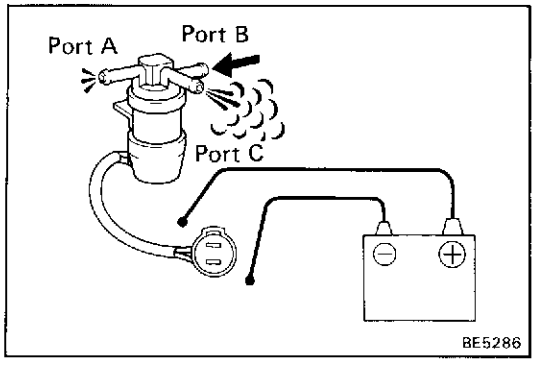

2. **INSPECT FUEL TRANSFER SOLENOID VALVE**

(a) Check that the air flows between ports B and C. Check that the air does not flow between ports A and B.

Port / Condition	A	B	C
No voltage		○—○	

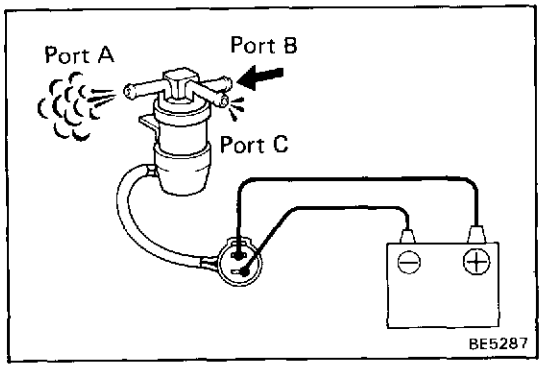

(b) Apply the battery voltage across the terminals. Check that the air flows between ports A and B Check that the air does not flow between ports B and C.

Port / Condition	A	B	C
Apply the battery voltage	○——	——○	

If operation is not as specified, replace the solenoid.

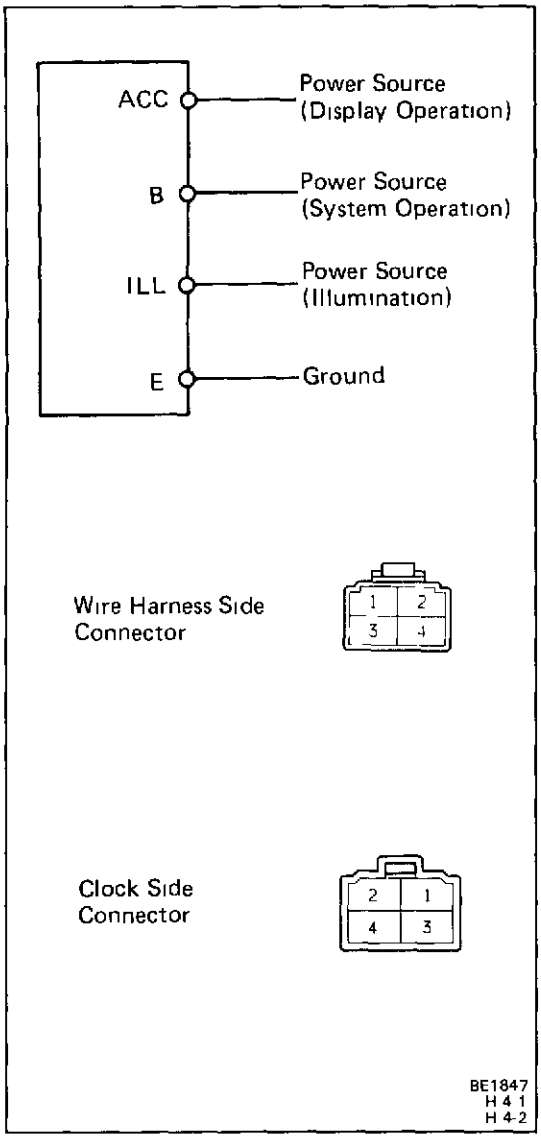

CLOCK

Troubleshooting

As shown in the illustration, those are clock circuit and connector diagrams Inspect each terminal for applicable trouble.

Terminal		Condition	Specified value
1	E	Constant	Continuity
2	ILL	Turn light control switch ON	Battery Voltage
3	B	Constant	
4	ACC	Turn ignition switch ON	

Allowable error: **±1.5 seconds/day**
(DC 26V, 20°C (68°F)/12 V Vehicles)
(DC 13V, 20°C (68°F)/24 V Vehicles)

AIR CONDITIONING SYSTEM

	Page
GENERAL INFORMATION	AC-2
DESCRIPTION	AC-4
PREPARATION	AC-13
TROUBLESHOOTING	AC-14
REFRIGERATION SYSTEM	AC-16
Inspection of Refrigeration System with Manifold Gauge Set	AC-16
Inspection of Refrigerant Volume	AC-18
Discharging of Refrigerant in Refrigeration System	AC-19
Evacuating of Air in Refrigeration System and Charging with Refrigerant	AC-19
COOLING SYSTEM	AC-19
Installation of Manifold Gauge set	AC-19
DRIVE BELT	AC-20
COMPRESSOR	AC-22
CONDENSER	AC-37
RECEIVER	AC-38
COOLING UNIT	AC-38
Evaporator	AC-40
Thermistor	AC-41
REAR COOLING UNIT	AC-42
TEMP. CONTROL RESISTOR	AC-44
EXPANSION VALVES	AC-45
A/C CONTROL ASSEMBLY	AC-46
Blower Switch	AC-46
A/C Control Levers	AC-46
PRESSURE SWITCH	AC-50
REFRIGERANT LINES	AC-50
BLOWER SWITCHES	AC-51
Front Heater Blower Switch	AC-51
Rear Heater Blower Switch	AC-51
BLOWER MOTORS	AC-52
Front Blower Motor	AC-52
Rear Blower Motor	AC-52
BLOWER RESISTORS	AC-52
Front Blower Resistor	AC-52
Rear Blower Resistor	AC-52
HEATER RELAYS	AC-53
Front Heater Relay	AC-53
Rear Heater Relay	AC-53
VACUUM SWITCHING VALVE (VSV)	AC-54
AIR CONDITIONER AMPLIFIER	AC-55

GENERAL INFORMATION

ELECTRICAL PARTS

Before removing and inspecting the electrical parts, set the ignition switch to the LOCK position and disconnect the negative (−) terminal cable from the battery

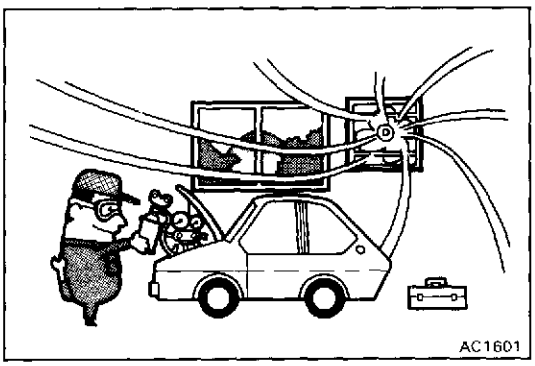
AC1601

COOLING SYSTEM

1. **WHEN HANDLING REFRIGERANT (R-12), FOLLOWING PRECAUTIONS MUST BE OBSERVED;**
   (a) Do not handle refrigerant in an enclosed area or near an open flame
   (b) Always wear eye protection.
   (c) Be careful that liquid refrigerant does not get in your eyes or on your skin.

   If liquid refrigerant gets in your eyes or on your skin;
   - Do not rub.
   - Wash the area with lots of cool water.
   - Apply clean petroleum jelly to the skin
   - Go immediately to a physician or hospital for professional treatment.
   - Do not attempt to treat yourself.

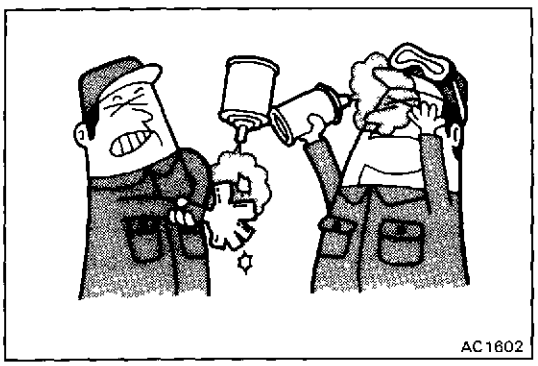
AC1602

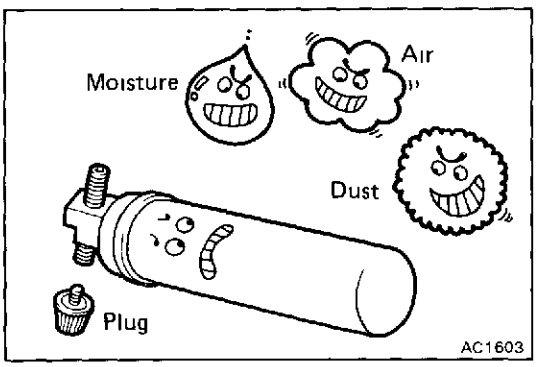

AC1603

2. **WHEN REPLACING PARTS IN REFRIGERANT LINE;**
   (a) Discharge the refrigerant in the line slowly before placement.
   (b) Insert a plug immediately in disconnected parts prevent the entry of moisture and dust.
   (c) Do not leave a new condenser or receiver, etc., ly around with the plugs removed.

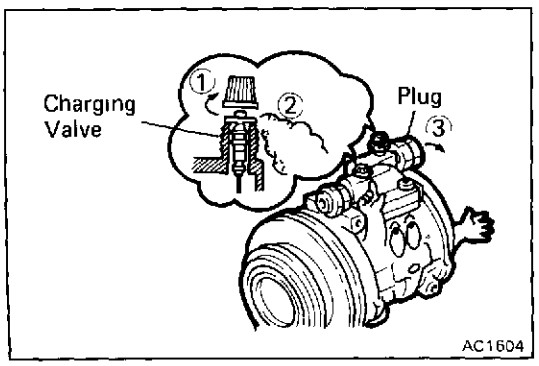

AC1604

   (d) Discharge the refrigerant from the charging v before installing a new compressor.

   If the refrigerant is not discharged first, compresso will spray out with the refrigerant gas when the pl removed.

   (e) Do not use a torch for tube bending or lengthe operations

   If tubes are heated with a torch, a layer of oxid forms inside the tube, causing the same kind of tr as an accumulation of dust.

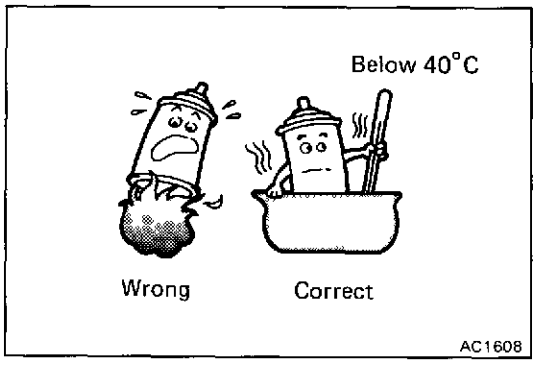

3. WHEN HANDLING REFRIGERANT CONTAINER (SERVICE CAN);

(a) The container must never be heated.

(b) Containers must be kept below 40°C (104°F)

(c) If warming a service can with hot water, be careful that the valve on top of the service can is never immersed in the water, as the water may permeate the refrigerant cycle.

(d) Empty service cans must never be re-used.

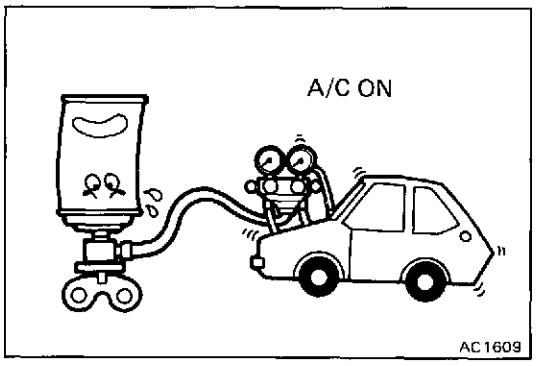

4. WHEN A/C IS ON AND REFRIGERANT GAS IS BEING REPLENISHED;

(a) If there is not enough refrigerant gas in the refrigerant cycle, oil lubrication will be insufficient and compressor burnout may occur, so take care to avoid this

(b) If the valve on the high pressure side is opened, refrigerant flows in the reverse direction and could cause the service can to rupture, so open and close the valve on the low pressure side only

(c) If the service can is inverted and refrigerant is loaded in a liquid state, the liquid is compressed and causes the compressor to break down, so the refrigerant must be in a gaseous state.

(d) Be careful not to load too much refrigerant gas, as this causes trouble such as inadequate cooling, poor fuel economy, engine overheating, etc.

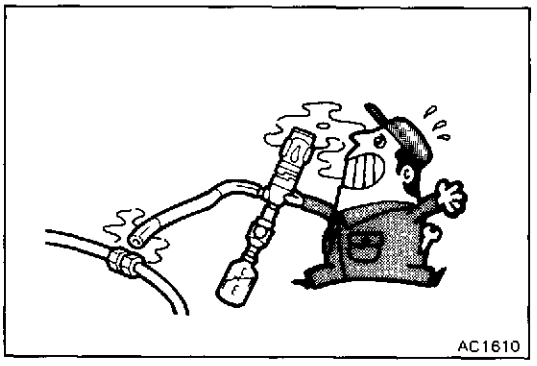

5. WHEN USING GAS-CYLINDER TYPE GAS LEAK TESTER;

(a) Since a naked flame is used, first make sure that there are no flammable substances nearby before using it.

(b) Be careful, as a poisonous gas is produced when refrigerant gas comes in contact with heated parts

DESCRIPTION

PARTS LOCATION

Single A/C

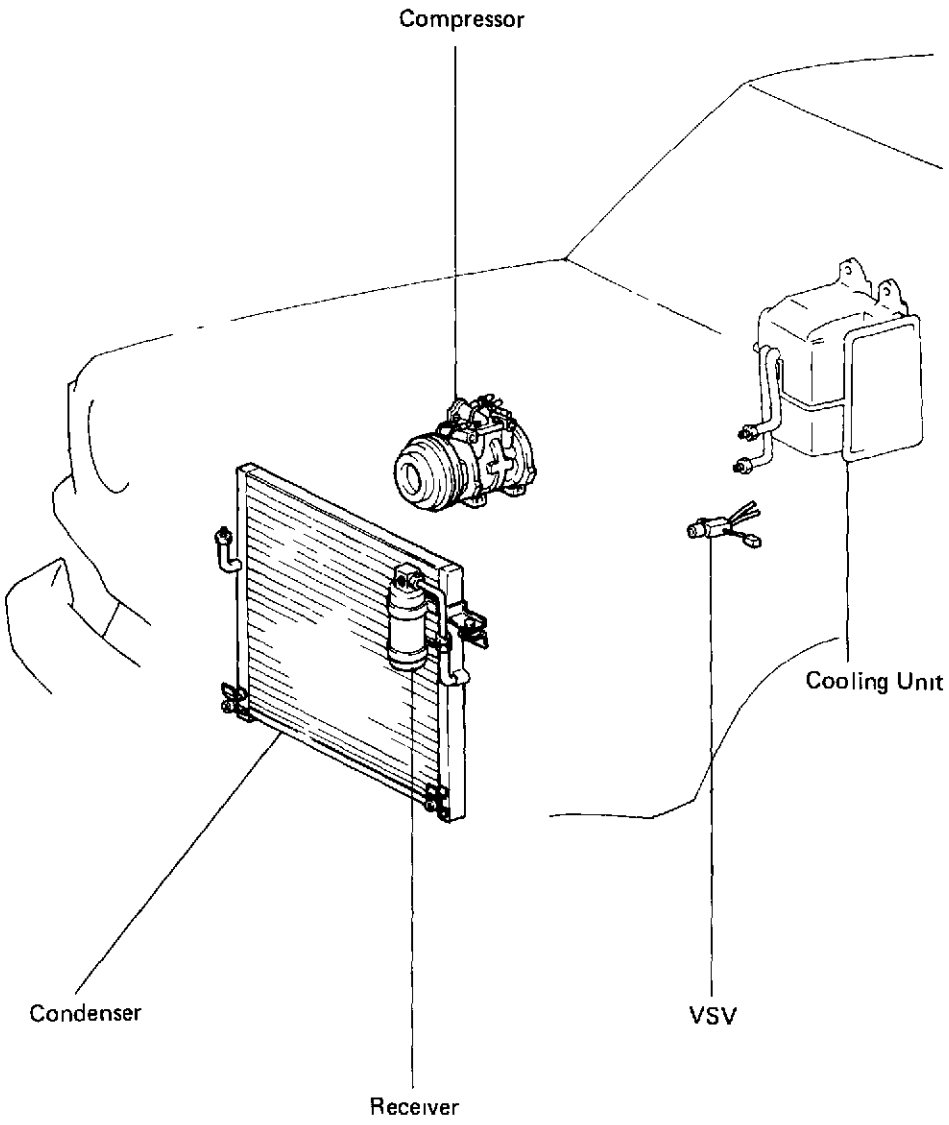

ELECTRICAL WIRING DIAGRAM (CONT'D)

Single A/C
2L-T, 3L engine

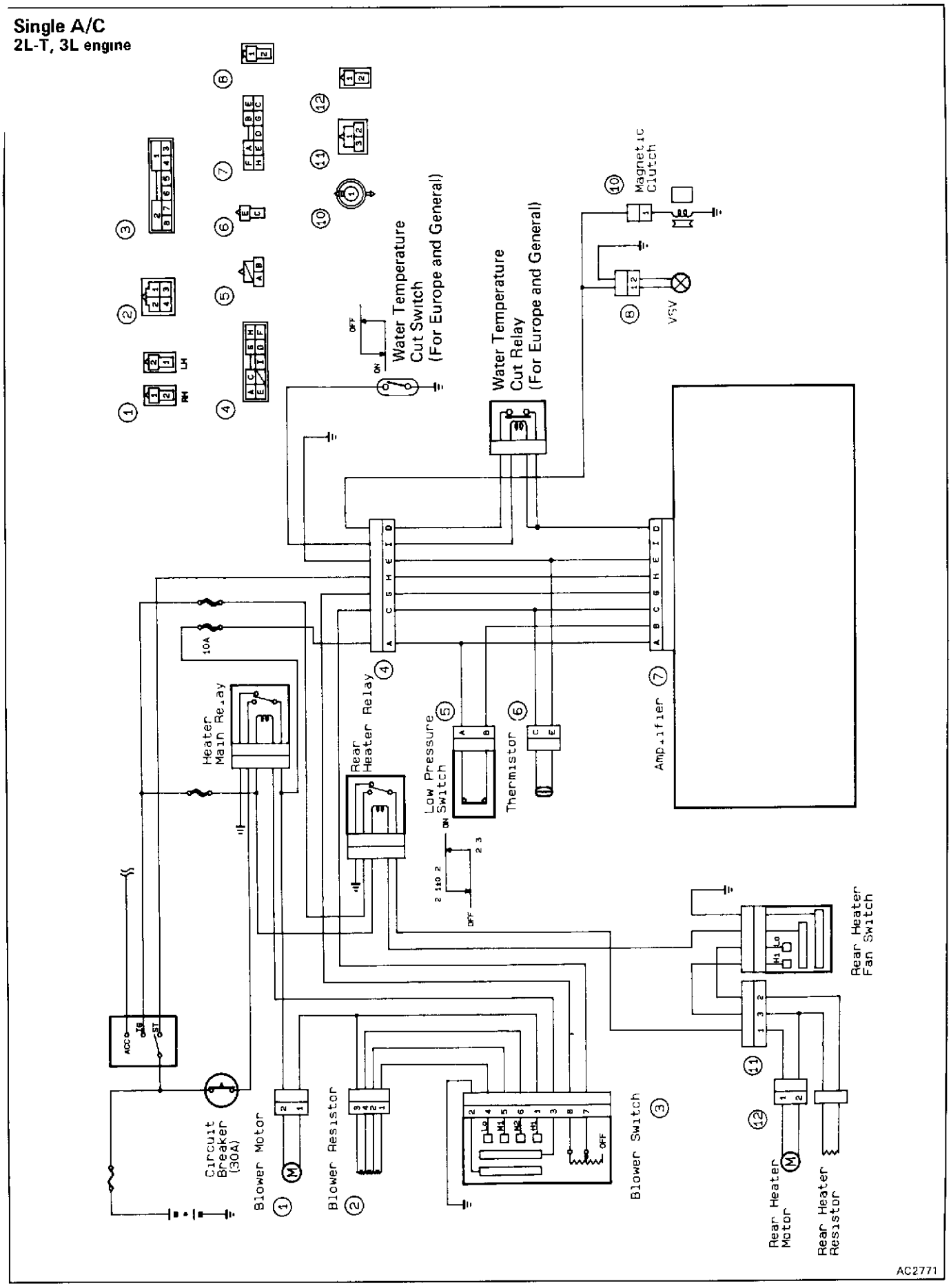

TROUBLESHOOTING

You will find the troubles easier using the table well shown below. In this table, each number shows the priority of causes in troubles. Check each part in order. If necessary, replace these parts.

See page / Parts Name / Trouble	AC-18 Inspect Volume of Refrigerant	AC-16 Inspect Refrigeration System with Manifold Gauge Set	AC-20 Inspect Drive Belt Tension	BE-10 Fusible Link	BE-10 Medium Current Fuse	BE-10 Fuse	AC-50 Pressure Switch	AC-41 Thermistor	BE-61 Water Temp. Switch
No blower operation				1	2				
No blower control									
No air flow mode control									
No air inlet control									
Insuficient flow of cool air									
Insuficient flow of warm air									
No cool air comes out	2	3	4			1	5	11	
Cool air comes out intermittently	1	2	3					5	
Cool air comes out only at high engine speed	2	3	1						
Insufficient cooling	1	2	3					11	
No warm air comes out									
Air temp control not functioning									
No engine idle up when A/C switch on									

TROUBLESHOOTING (Cont'd)

Heater Relay (AC-53)	Blower Resistor (AC-52)	Blower Motor (AC-52)	A/C Control Assembly (AC-47)	A/C Amplifier (AC-55)	Compressor (AC-22)	Condenser (AC-37)	Evaporator (AC-40)	Expansion Valve (AC-45)	Magnetic Clutch (AC-25)	Receiver (AC-38)	Water Valve (AC-48)	Heater Radiator (—)	A/C Idle Up VSV (AC-54)	Wiring or Wiring Connection (AC-6)
3	6	5	4											7
	2		1											3
			1											2
			1											2
1	3	2					4							5
1	3	2										4		5
			9	10	7				6		8			
				4				6						7
					5	4								
				10	9	4	12	13	8	5	7			
			2								1	3		4
			2								1			3
				2									1	3

REFRIGERATION SYSTEM

Inspection of Refrigeration System with Manifold Gauge Set

This is a method in which the trouble is located by using a manifold gauge set. (See "Installation of Manifold Set" on page AC-19) Read the manifold gauge pressure when the following conditions are established

(a) Temperature at the air inlet with the switch set at RECIRC is 30 — 35°C (86 — 95°F)

(b) Engine running at 2,000 rpm

(c) Blower fan speed control switch set at high speed

(d) Temperature control switch set at max cool side

HINT: It should be noted that the gauge indications may vary slightly due to ambient temperature conditions.

No.	Gauge reading kg/cm^2 (psi, kPa)	Condition	Probable cause	Remedy
1	LO: 1.5—2.0 (21—28, 147—196) HI: 14.5—15.0 (206—213, 1,422—1,471) 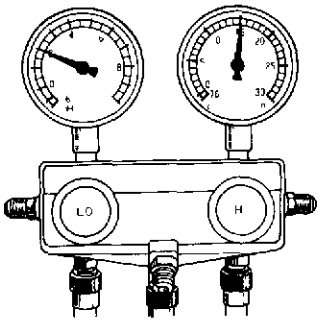 AC0067	Normal cooling	Normally functioning system	
2	During operation, pressure at low pressure side sometimes becomes a vacuum and sometimes normal 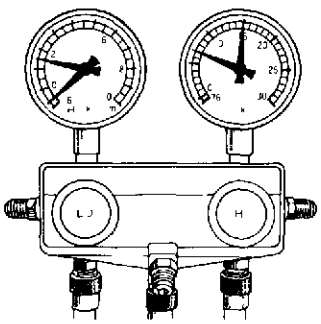 AC0068	Periodically cools and then fails to cool	Moisture present in refrigeration system	(1) Replace receiver (2) Remove moisture in system through repeatedly evacuating air (3) Charge with refrigerant to proper amount
3	Pressure low at both low and high pressure sides 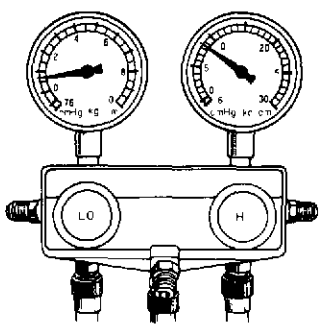 AC0069	• Insufficient cooling • Bubbles seen in sight glass	Insufficient refrigerant	(1) Using gas leak tester, check for leakage (2) Charge refrigerant to proper amount
		• Insufficient cooling • Frost on tubes from receiver to unit	Refrigerant flow obstructed by dirt in receiver	Replace receiver

No.	Gauge reading kg/cm² (psi, kPa)	Condition	Probable cause	Remedy
4	Pressure too high at both low and high pressure side	Insufficient cooling	Insufficient cooling of condenser	(1) Clean condenser (2) Check fan motor operation
5	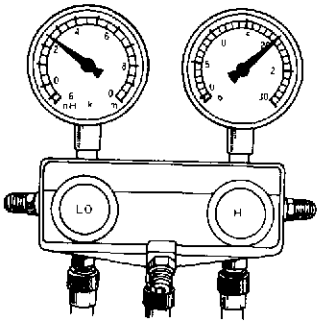		Refrigerant over charged	Check amount of refrigerant HINT: Vent out refrigerant throuh gauge manifold low pressure side by gradually opening valve
6			Air present in system	(1) Replace receiver (2) Check compressor oil to see if dirty or insufficient (3) Evacuate air and charge with new refrigerant
7	AC0070	• Insufficient cooling • Frost or large amount of dew on piping at low pressure side	Expansion valve improperly mounted, heat sensing tube defective (Opens too wide)	(1) Check heat sensing tube installation condition (2) If (1) is normal, check expansion valve (3) Replace if defective
8	Vacuum indicated at low pressure side, very low pressure indicated at high pressure 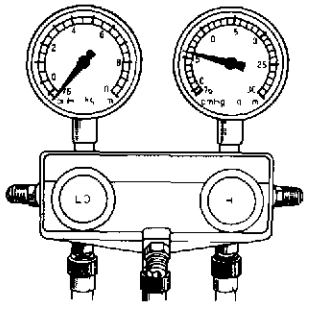 AC0156	• Does not cool (Cools from time to time in some cases) • Frost or dew seen on piping before and after receiver or expansion valve	Refrigerant does not circulate	Alow to stand for some time and then restart operation to determine if trouble is caused by moisture or dirt If caused by moisture refer to procedures step 2 on page AC-20 If caused by dirt, remove expansion valve and clean off dirt by blowing with air. If not able to remove dirt, replace valve Evacuate air and charge with new refrigerant to proper amount For gas leakage from heat sensing tube, replace expansion valve

HINT at No.6
These gauge indications are shown when the refrigeration system has been opened and the refrigerant charged without evacuating air.

No.	Gauge reading kg/cm^2 (psi, kPa)	Condition	Probable cause	Remedy
9	Pressure too high at low pressure side, pressure too low at high pressure side 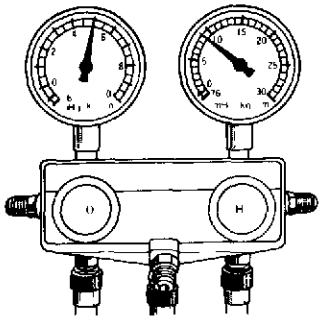 AC0157	Does not cool	Insufficient compression	Repair or replace compressor

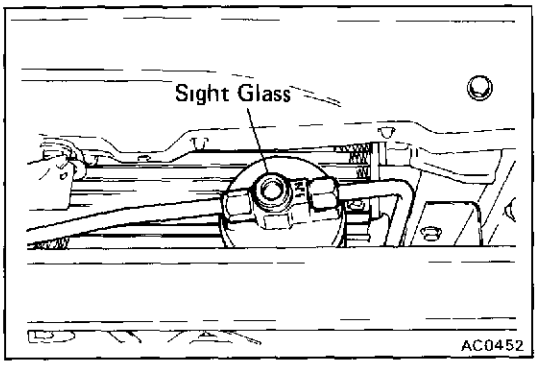

Inspection of Refrigerant Volume

1. **RUN ENGINE AT APPROX. 1,500 RPM**
2. **OPERATE A/C AT MAXIMUM COOLING FOR A FEW MINUTES**
3. **INSPECT AMOUNT OF REFRIGERANT**
   Observe the sight glass on the liquid tube

Item	Symptom	Amount of refrigerant	Remedy
1	Bubbles present in sight glass	Insufficient*	Check for gas leakage with gas leak tester
2	No bubbles present in sight glass	None, sufficient or too much	Refer to items 3 and 4
3	No temperature difference between compressor inlet and outlet	Empty of nearly empty	Evacuate and charge system Then check for gas leakage with gas leak tester
4	Temperature between compressor inlet and outlet is noticeably different	Proper or too much	Refer to items 5 and 6
5	Immediately after air conditioner is turned off, refrigerant in sight glass stays clear	Too much	Discharge excess refrigerant to specified amount
6	When air conditioner is turned off, refrigerant foams and then stays clear	Proper	Refer to items 3 and 4

*. Bubbles in the sight glass with ambient temperatures higher can be considered normal if cooling is sufficient

Discharging of Refrigerant in Refrigeration System

(See Air Conditioning Fundamentals and Repairs Pub. No.36950E)

Evacuating of Air in Refrigeration System and Charging with Refrigerant

(See Air Conditioning Fundamentals and Repairs Pub. No.36950E)

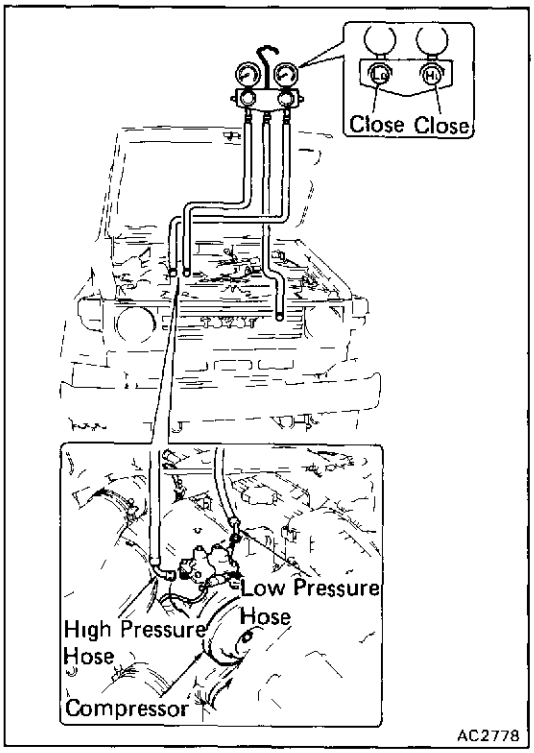

COOLING SYSTEM

Installation of Manifold Gauge Set

1. **CLOSE BOTH HIGH AND LOW HAND VALVES**

2. **CONNECT CHARGING HOSES TO CHARGING VALVES**

   (a) Connect the low pressure hose to the low pressure charging valve and the high pressure hose to the high pressure charging valve.

   (b) Tighten the hose nuts by hand.

   NOTICE: Do not apply compressor oil to the seats of the connection.

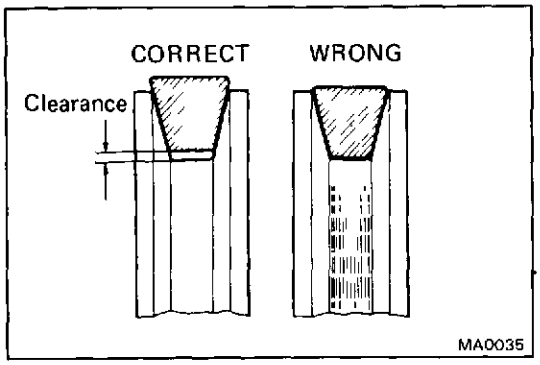

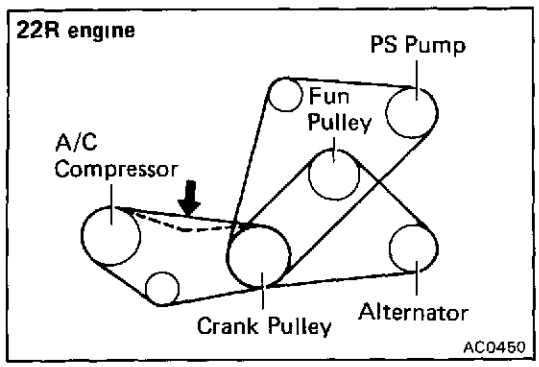

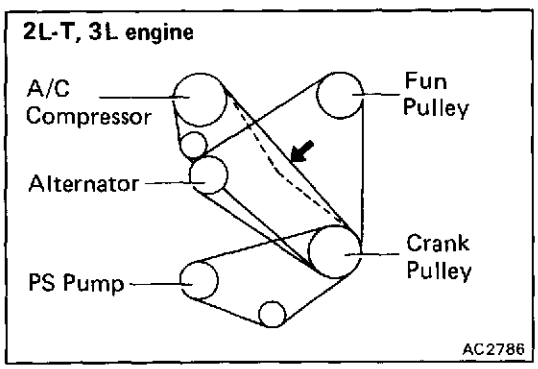

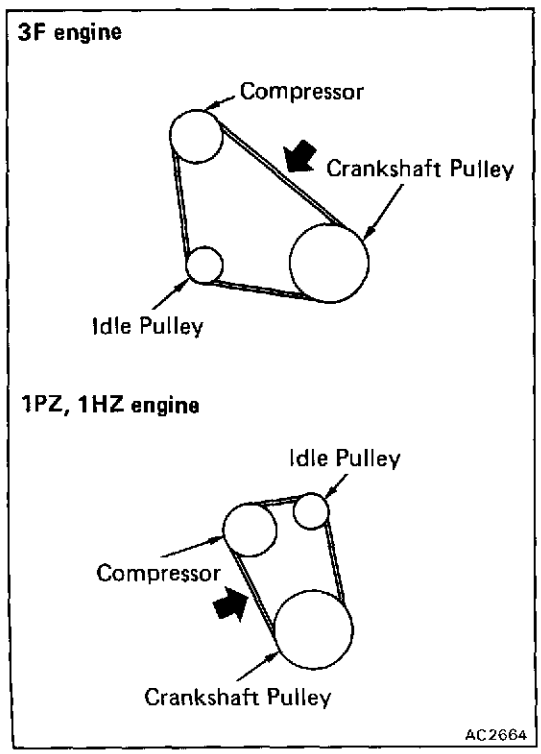

DRIVE BELT

ON-VEHICLE INSPECTION

1. **INSPECT CONDENSER FINS FOR BLOCKAGE OR DAMAGE**

   If the fins are clogged, clean them with pressurized water.

   NOTICE: Be careful not to damege the fins.

2. **CHECK DRIVE BELT TENSION**

   Drive belt tension at 10 kg (22.0 lb, 98N):

mm (in.)

Engine	New belt	Used belt
22R	7 – 9.5 (0.28 – 0.38)	9.5 – 13 (0.38 – 0.52)
2L-T, 3L	13 – 17 (0.52 – 0.68)	17 – 21 (0.68 – 0.84)
1PZ, 1HZ	12 – 16 (0.48 – 0.64)	16 – 22 (0.64 – 0.88)
3F	11 – 15 (0.44 – 0.60)	15 – 21 (0.60 – 0.84)

HINT:

- "New belt" refers to a belt which has been used less than 5 minutes on a running engine.
- "Used belt" refers to a belt which has been used on a running engine for 5 minutes or more.
- After installing the drive belt, check that it fits properly in the ribbed grooves.

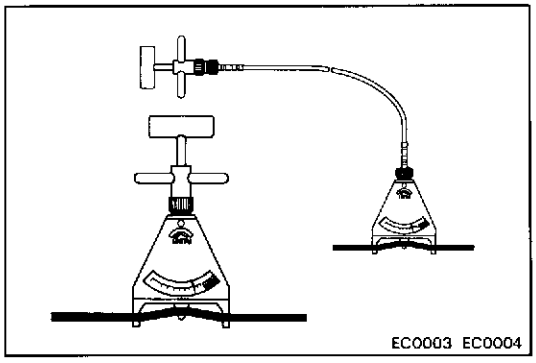

(Reference)

Using SST, check the drive belt tension

SST 09216-00020 and 09216-00030

New belt 40 — 55 kg

Used belt 20 — 35 kg

COMPRESSOR

On-Vehicle Inspection (Magnetic Clutch)

INSPECT MAGNETIC CLUTCH FOR FOLLOWING

(a) Inspect the pressure plate and the rotor for signs of oil.

(b) Check the clutch bearings for noise and grease leakage.

(c) Connect the positive (+) lead from the battery to the terminal on the magnetic clutch connector and the negative (−) lead to the body ground.

(d) Check that the magnetic clutch is energized.

If the magnetic clutch is not energized, replace the magnetic clutch.

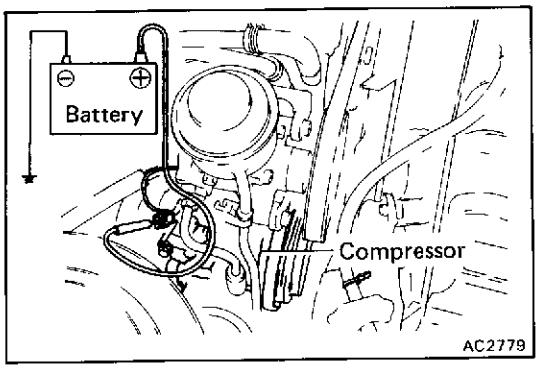

(Compressor)

1. **INSTALL MANIFOLD GAUGE SET**
(See page AC-19)

2. **RUN ENGINE AT APPROX. 2,000 RPM**

3. **INSPECT COMPRESSOR FOR FOLLOWING**

(a) High pressure gauge reading is not lower and low pressure gauge reading is not higher than normal.

(b) Check that the metallic sound.

(c) Check that the leakage from shaft seal

If defects are found, replace the compressor.

COMPONENTS

22R engine

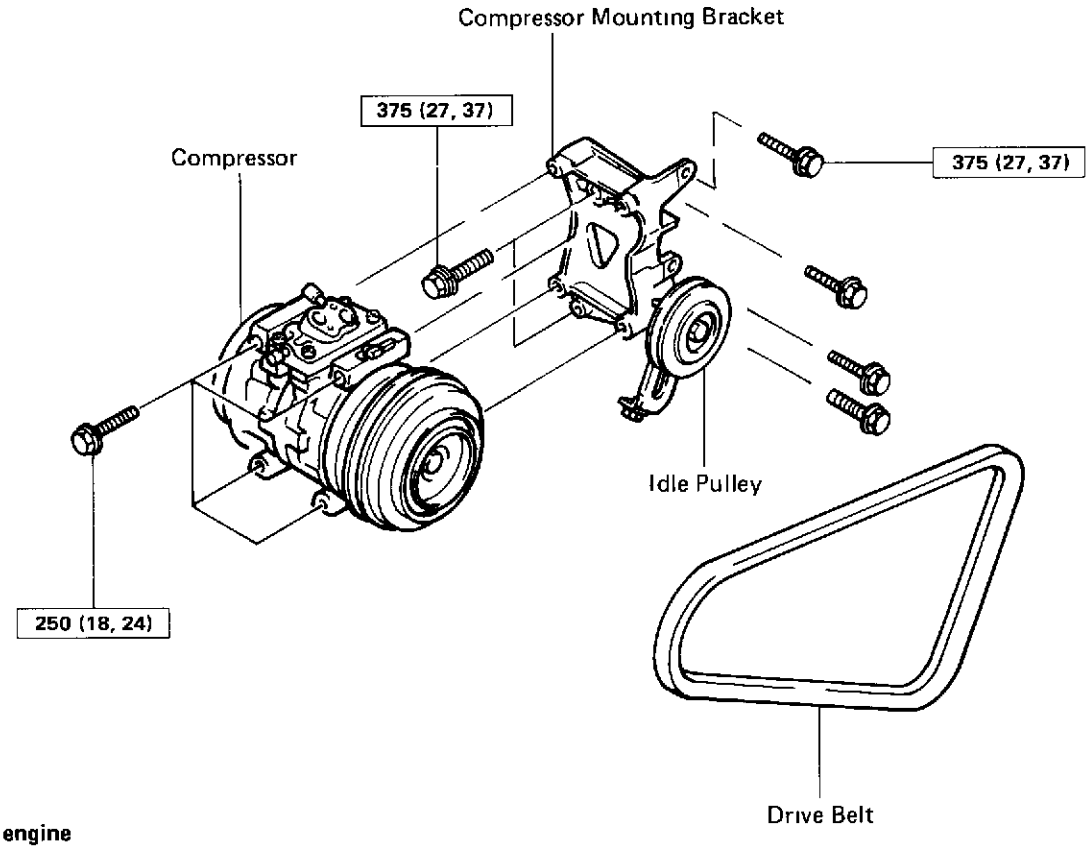

2L-T, 3L engine

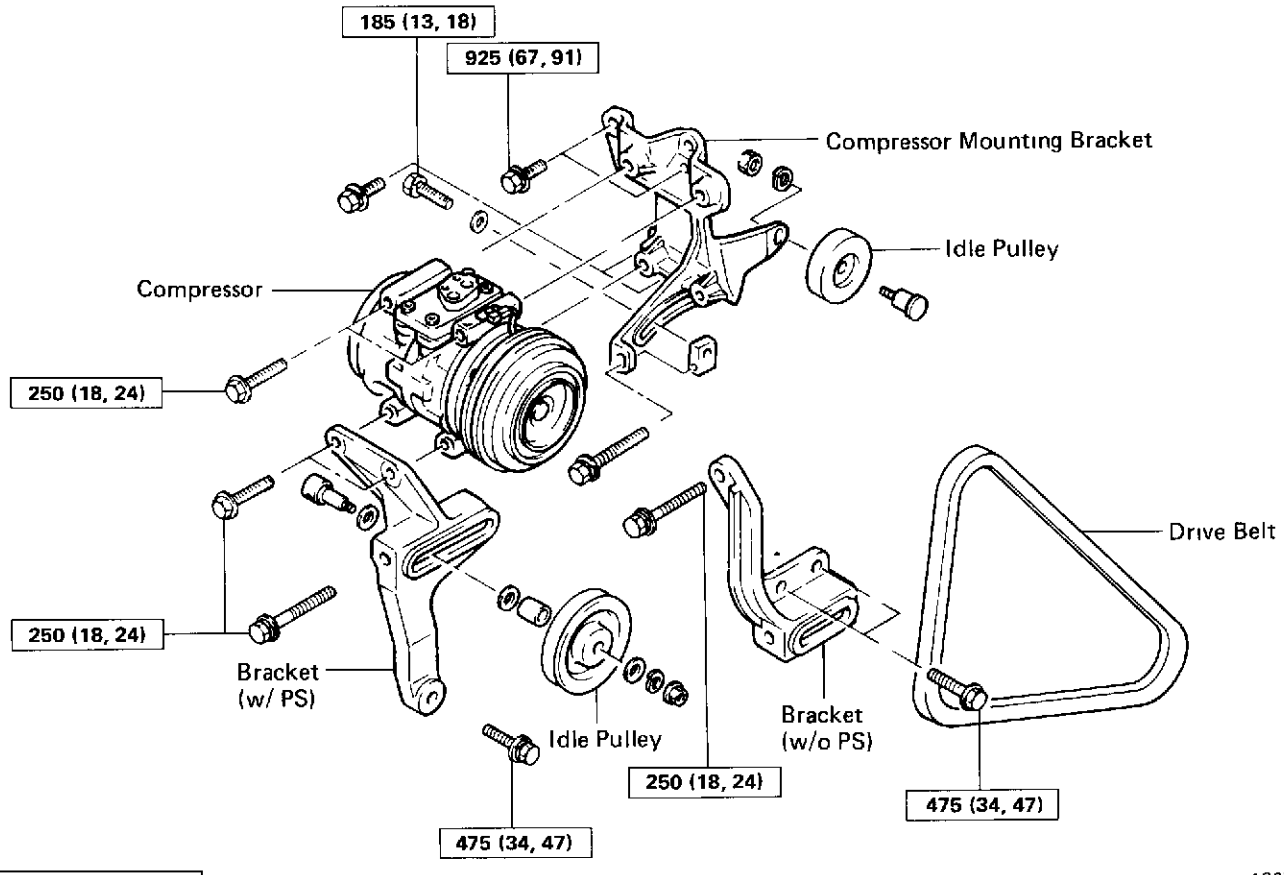

kg-cm (ft-lb, N·m) . Specified torque

AC2791
AC2792

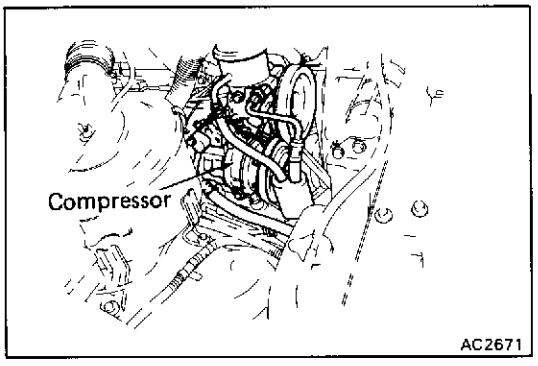

1. **RUN ENGINE AT IDLE WITH A/C ON FOR TEN MINUTES**
2. **STOP ENGINE**
3. **DISCONNECT NEGATIVE CABLE FROM BATTERY**
4. **REMOVE UNDER COVER**
5. **DISCONNECT CONNECTOR FROM MAGNETIC CLUTCH**
6. **DISCHARGE REFRIGERANT FROM REFRIGERATION SYSTEM**
7. **DISCONNECT TWO HOSES FROM COMPRESSOR SERVICE VALVES**

   Cap the open fitting immediately to keep moisture and dust out of the system.
8. **REMOVE COMPRESSOR**
   (a) Loosen the drive belt.
   (b) Remove the compressor mounting bolts and the compressor.

DISASSEMBLY OF MAGNETIC CLUTCH

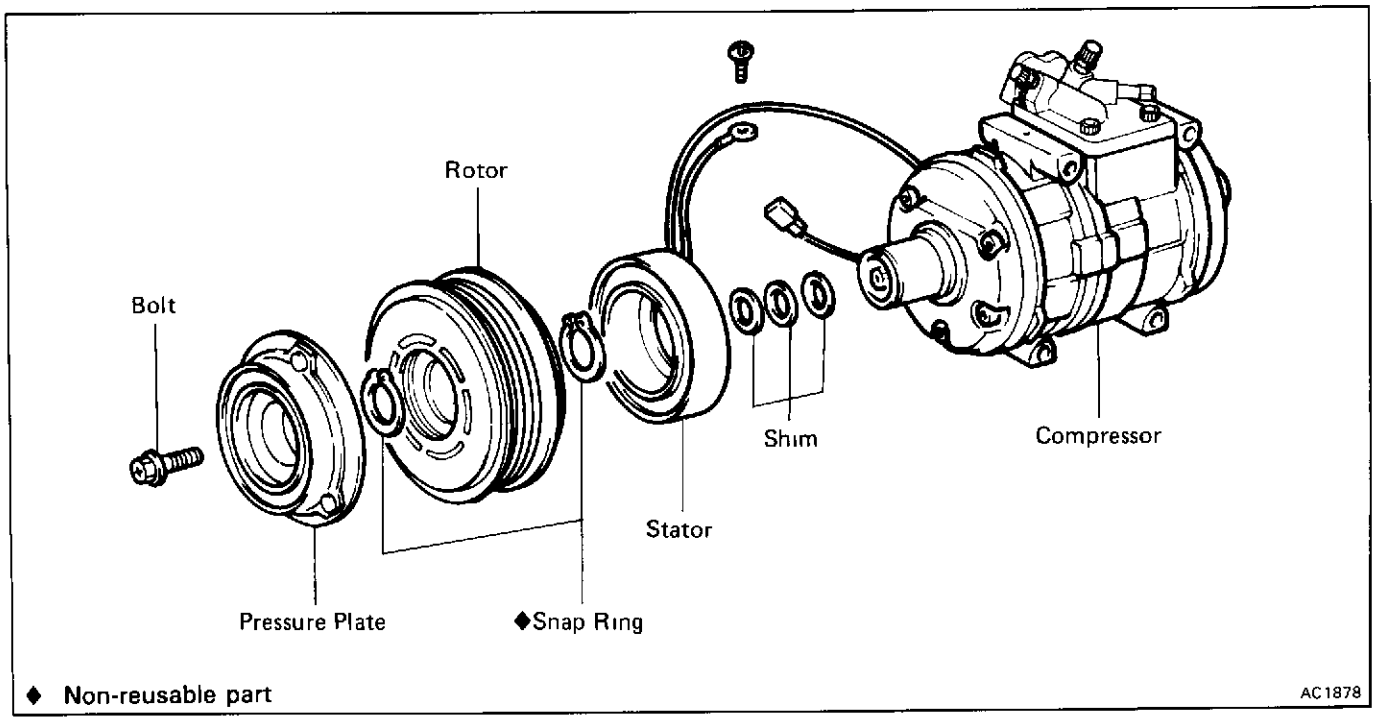

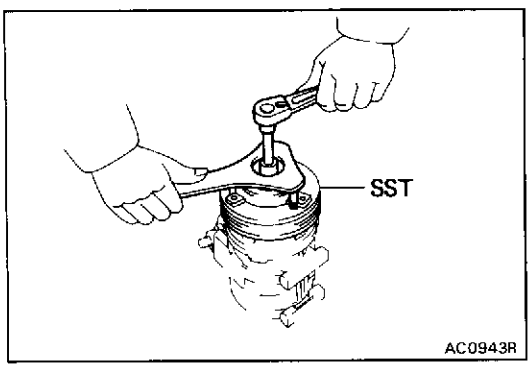

1. **REMOVE PRESSURE PLATE**
   (a) Using SST, remove the shaft bolt.
   SST 07112-76060

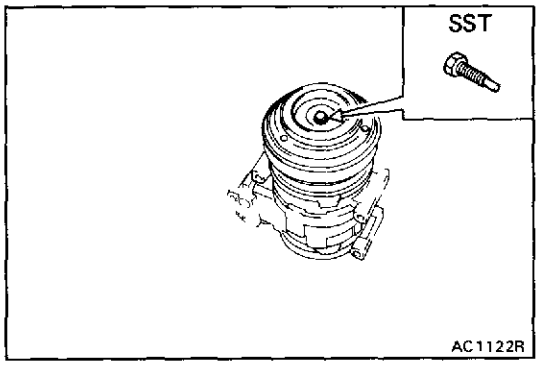

(b) Install SST to the pressure plate.
SST 07112-66040

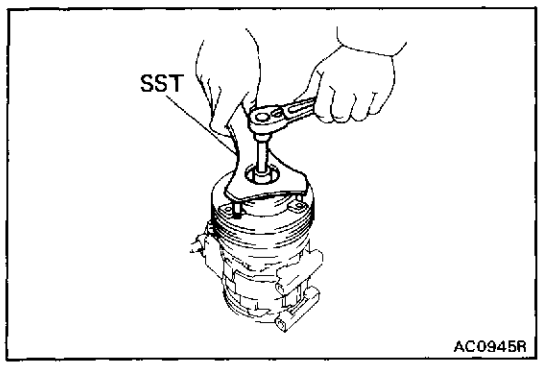

(c) Using SST, remove the pressure plate.
SST 07112-76060

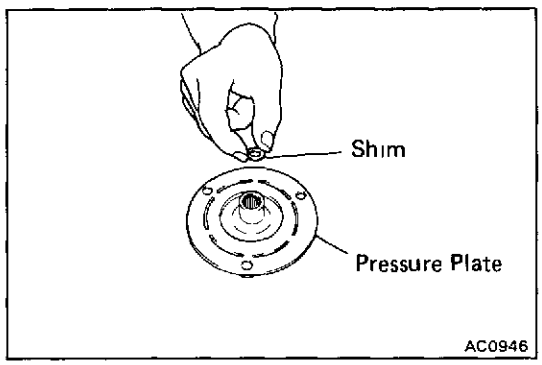

(d) Remove the shims from the pressure plate.

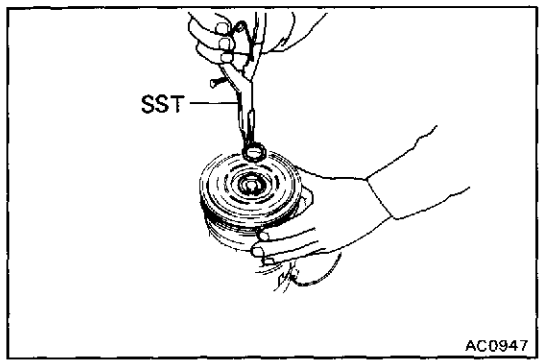

2. REMOVE ROTOR

(a) Using SST, remove the snap ring.
SST 07114-84020

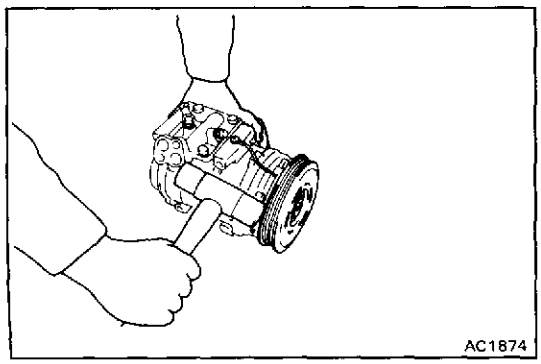

(b) Using a plastic hammer, tap the rotor off the shaft

NOTICE: Be careful not to damage the pulley when tapping on the rotor.

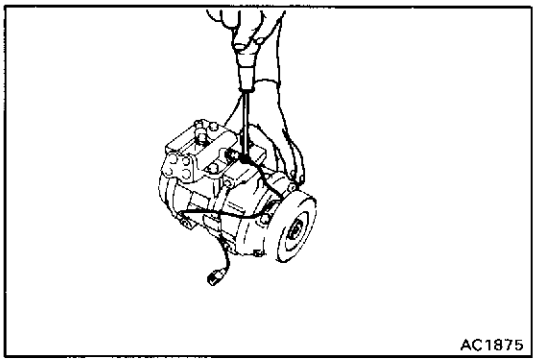
AC1875

3. REMOVE STATOR

(a) Disconnect the stator lead wire from the compressor housing.

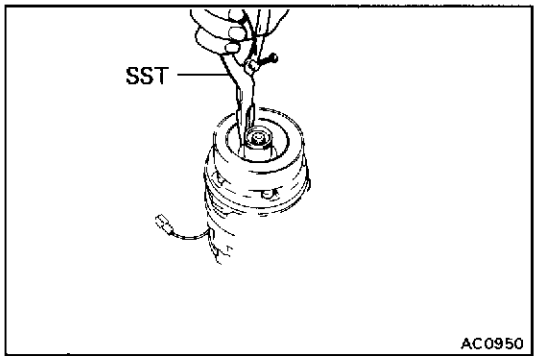

AC0950

(b) Using SST, remove the snap ring.

SST 07114-84020

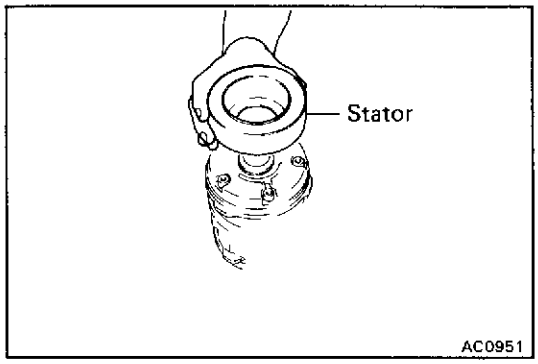

AC0951

(c) Remove the stator.

REPLACEMENT OF SHAFT SEAL

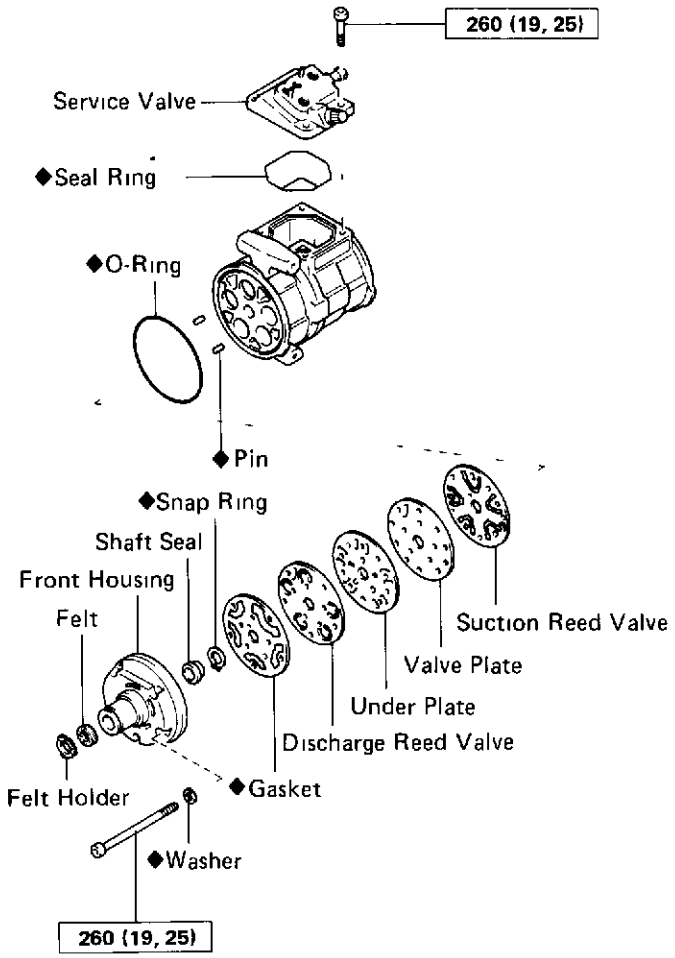

kg-cm (ft-lb, N·m) : Specified torque

◆ Non-reusable part

AC2768

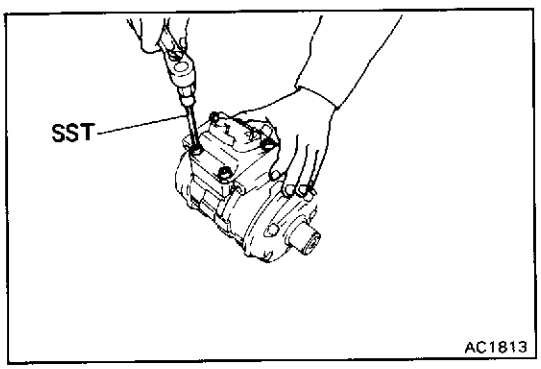

AC1813

1. **REMOVE SERVICE VALVE**

(a) Using SST, remove four bolts holding the service valve.

SST 07110-61050

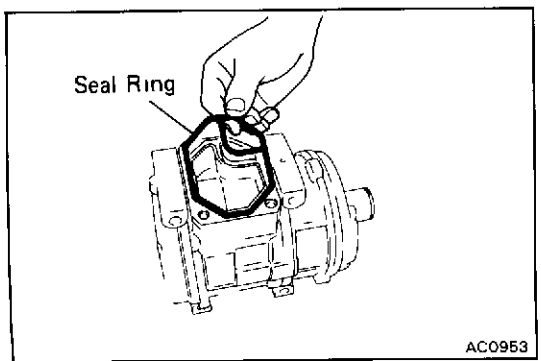

AC0953

(b) Remove the seal ring from the cylinder block.

Discard the seal ring

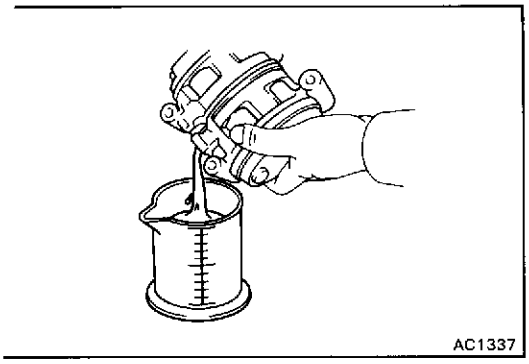

2. DRAIN COMPRESSOR OIL INTO MEASURING FLASK

Measure the quantity of drained oil because the same amount should be replaced later.

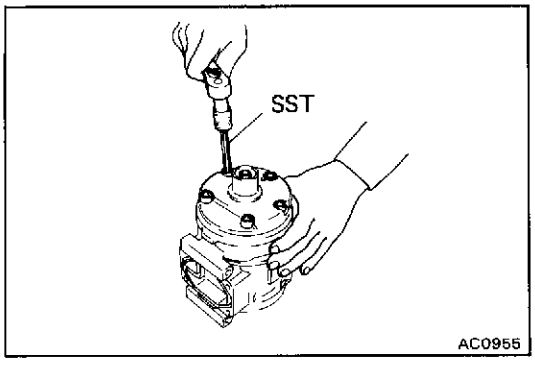

3. REMOVE FRONT HOUSING

(a) Using SST, remove five through bolts.

HINT: Do not reuse five washers.

SST 07110-61050

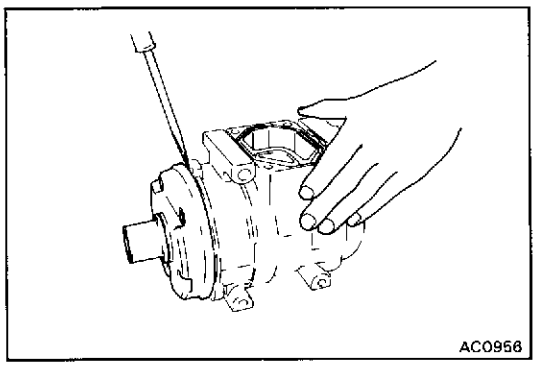

(b) Using a screwdriver, remove the front housing.

NOTICE: Be careful not to scratch the sealing surface of the front housing.

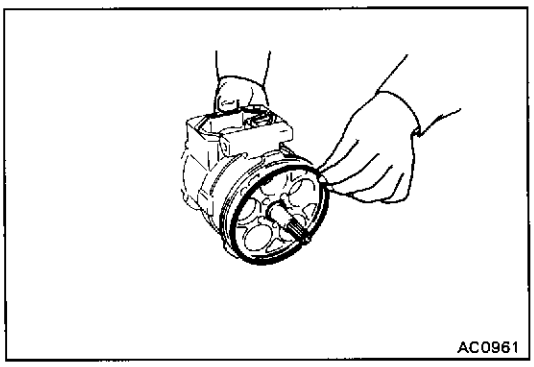

4. REMOVE O-RING

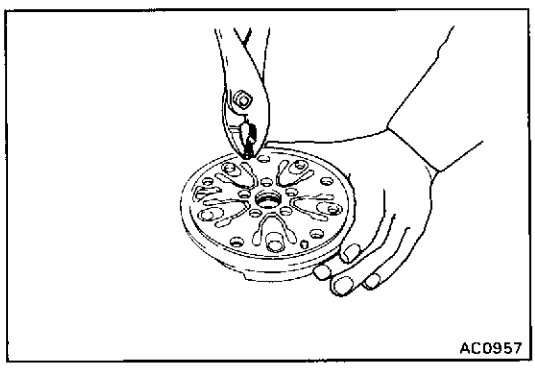

5. REMOVE FRONT VALVE PLATE

(a) Remove two pins from the front housing. Discard the pins.

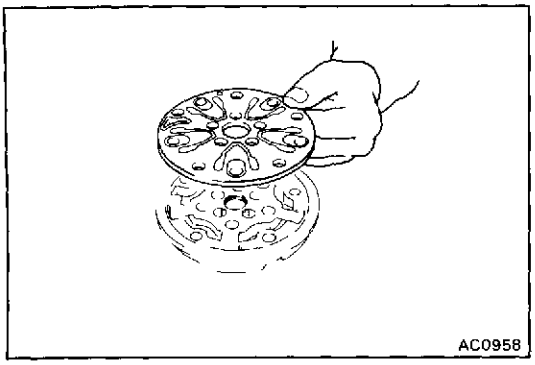
AC0958

(b) Remove the front valve plate with reed valves.

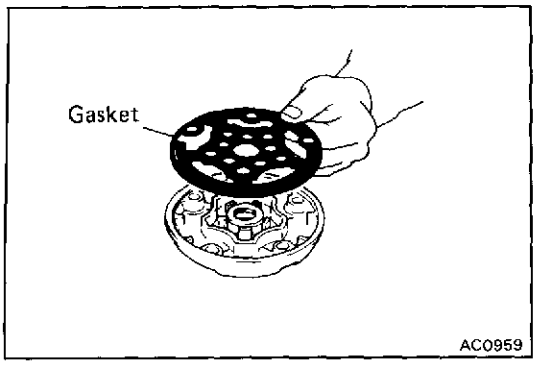

AC0959

6. REMOVE GASKET

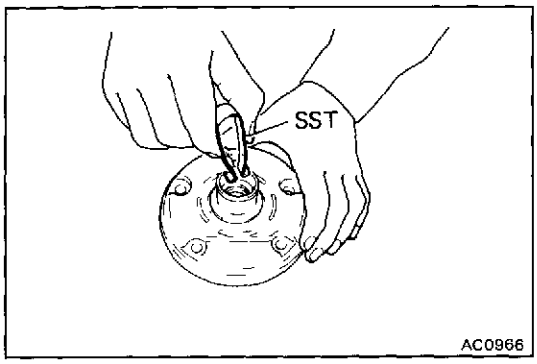

AC0966

7. REMOVE FELT

(a) Set SST on the felt.

SST 07112-15020

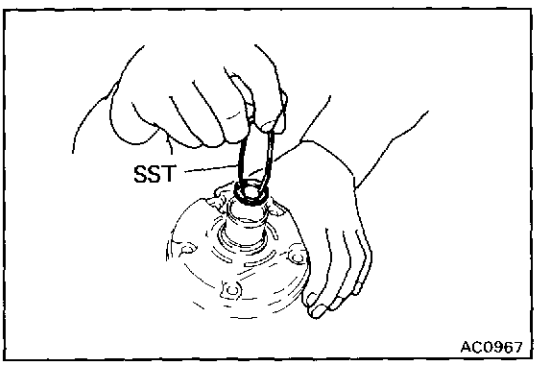

AC0967

(b) Using SST, pull the felt with felt holder out of front housing.

SST 07112-15020

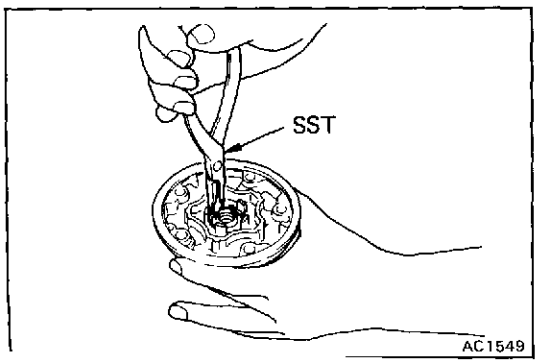

AC1549

8. REMOVE SHAFT SEAL

(a) Using SST, remove the snap ring from the front housing.

SST 07114-84010

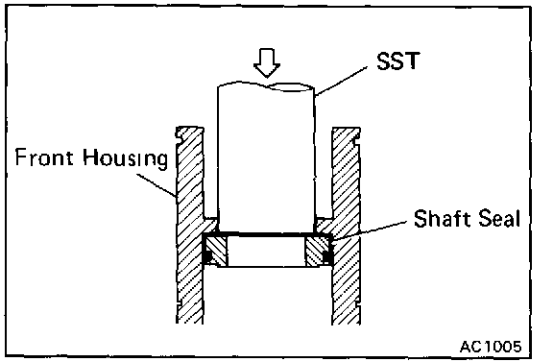

(b) Set SST on the shaft seal.

SST 07112-85030

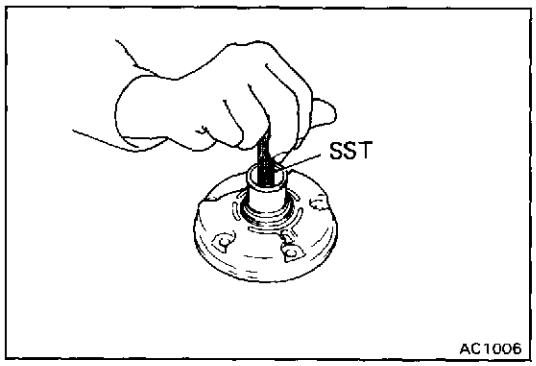

(c) Using SST, put the shaft seal out of the front housing.

SST 07112-85030

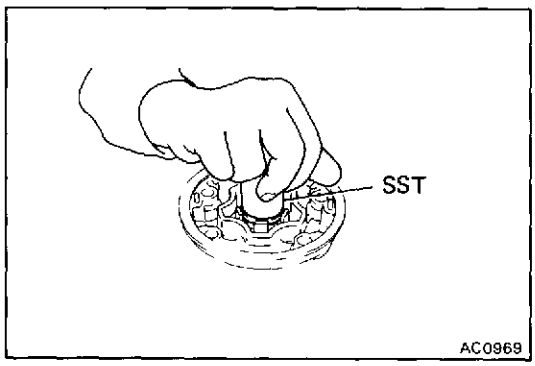

9. INSTALL SHAFT SEAL

(a) Fit shaft seal on SST, and install the shaft seal into the front housing.

SST 07112-85020

HINT. Clean up the surface of the shaft seal with compressor oil.

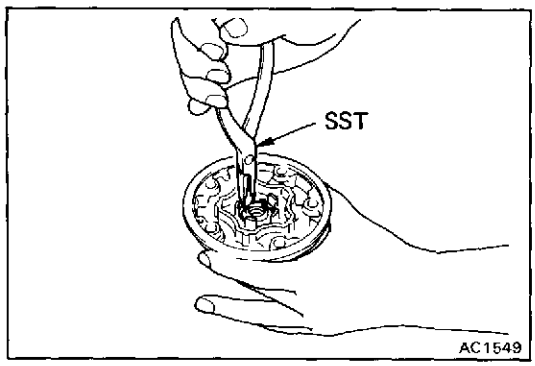

(b) Using SST, install the snap ring into the front housing.

SST 07114-84010

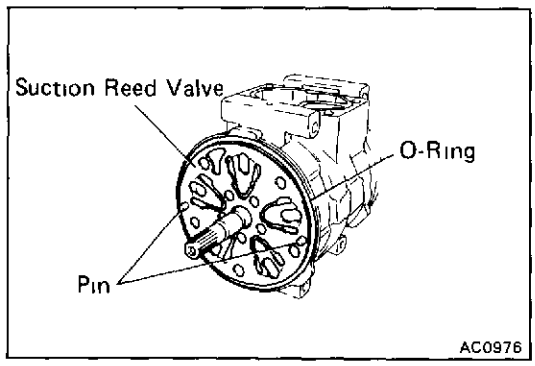

10. INSTALL FRONT VALVE PLATE ON FRONT CYLINDER

(a) Install two pins in the front cylinder

(b) Lubricate a new O-ring with compressor oil and install it in the front housing.

(c) Install the front suction reed valve over the pins on the front cylinder.

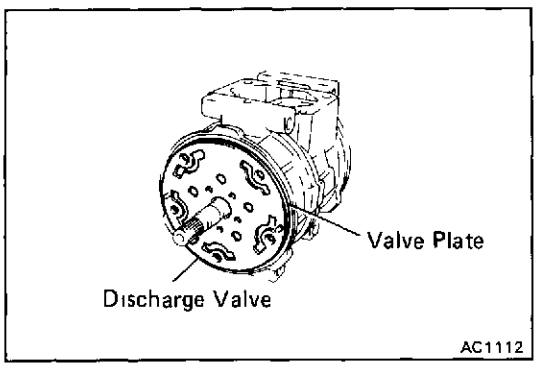

(d) Install the front valve plate with the discharge reed valve over the pins on the front cylinder.

HINT: The front valve plate is marked with an "F".

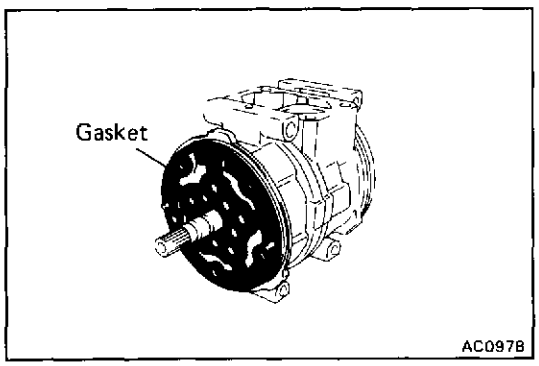

(e) Lubricate a new gasket with compressor oil and install the gasket on the valve plate.

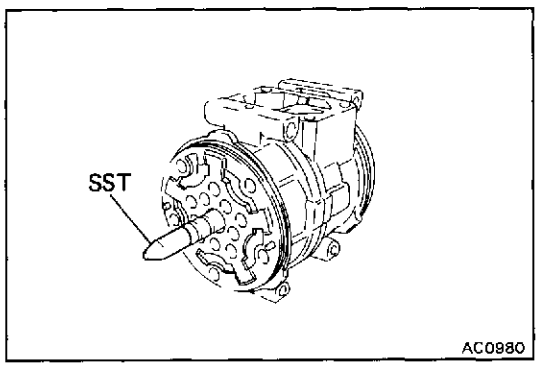

11. INSTALL FRONT HOUSING ON FRONT CYLINDER

(a) Set SST on the shaft to protect the seal lip.

SST 07112-85010

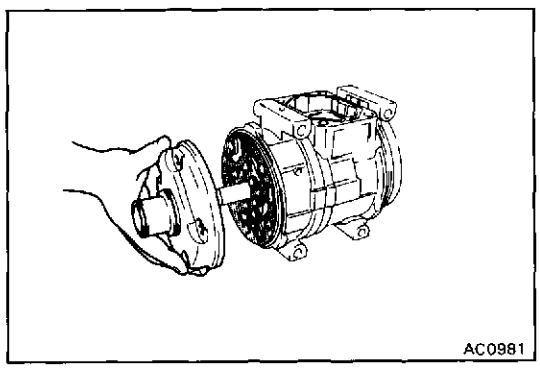

(b) Install the front housing on the front cylinder.

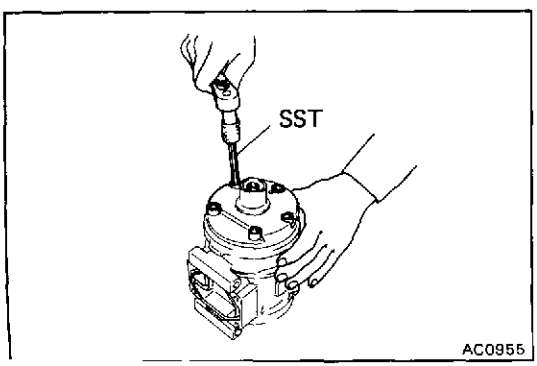

12. TIGHTEN FIVE THROUGH BOLTS

Using SST, gradually tighten the five through bolts in two or three passes.

SST 07110-61050

Torque: 260 kg-cm (19 ft-lb, 25 N·m)

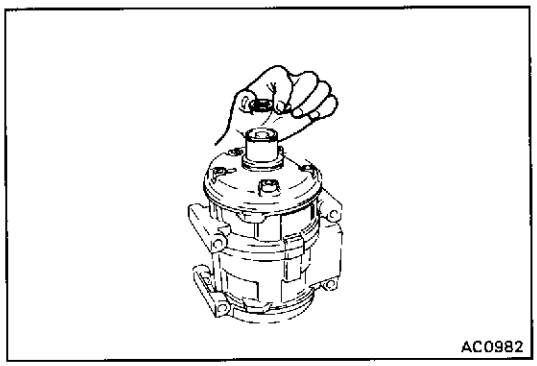
AC0982

13. INSTALL FELT

(a) Set the felt with felt holder to the front housing.

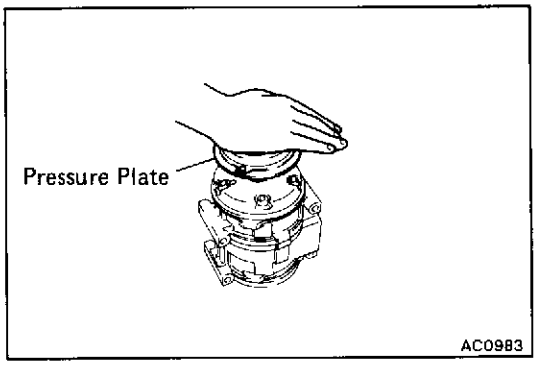

AC0983

(b) Using pressure plate of magnetic clutch, install the felt.

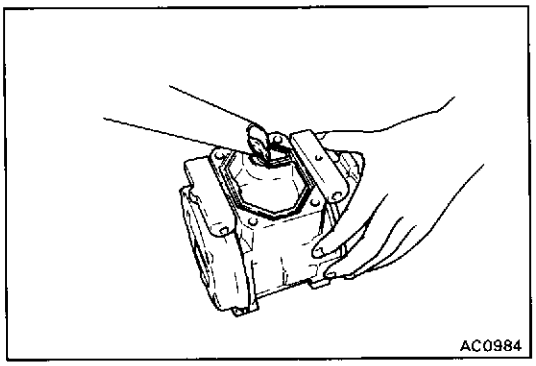
AC0984

14. POUR COMPRESSOR OIL INTO COMPRESSOR

Add the same quantity of oil as was removed, plus 20 cc (0.7 fl.oz), into the compressor.

Compressor oil: DENSOOIL 6, SUNISO No.5GS or equivalent

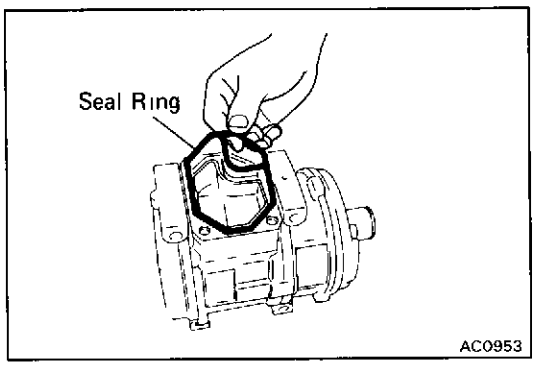

AC0953

15. INSTALL SERVICE VALVE

(a) Lubricate new seal ring with compressor oil.
Install the seal ring in the service valve.

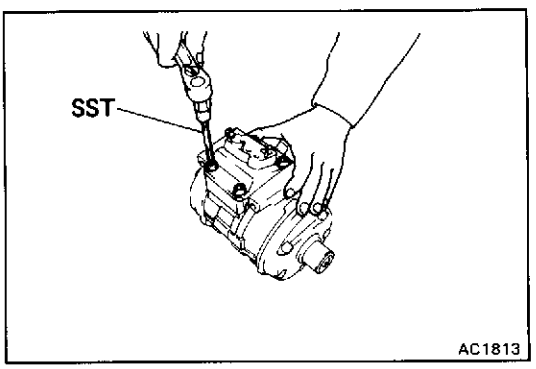

AC1813

(b) Install the service valve on the compressor.
Using SST, tighten the bolts.

SST 07110-61050

Torque: 260 kg-cm (19 ft-lb, 25 N·m)

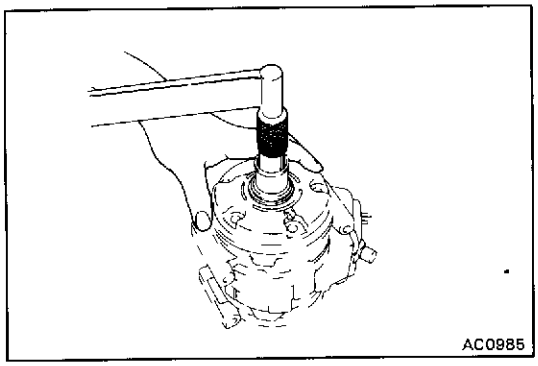
AC0985

16. **CHECK SHAFT STARTING TORQUE**

Torque: 30 kg-cm (26 in.-lb, 2.9 N·m) or less

ASSEMBLY OF MAGNETIC CLUTCH

(See page AC-25)

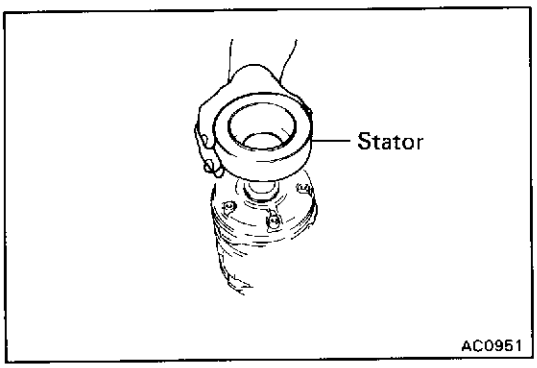

AC0951

1. **INSTALL STATOR**

(a) Install the stator on the compressor

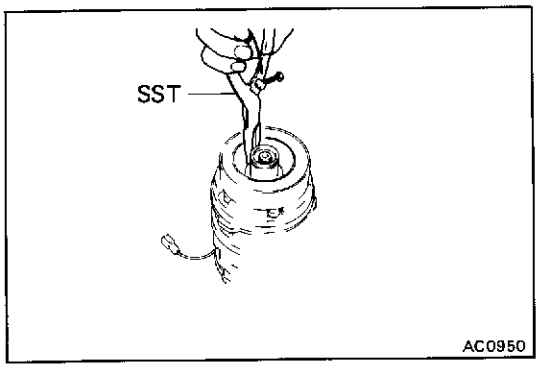

AC0950

(b) Using SST, install a new snap ring.

SST 07114-84020

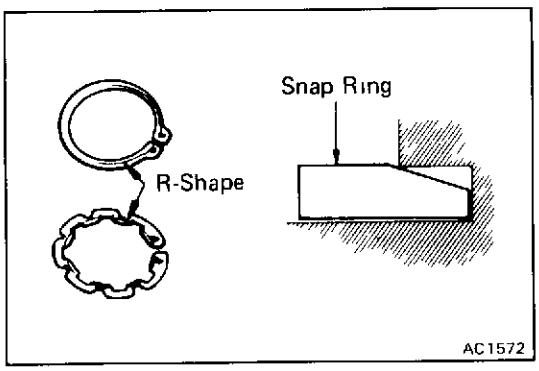

AC1572

NOTICE: The snap ring should be installed so that beveled side faces up.

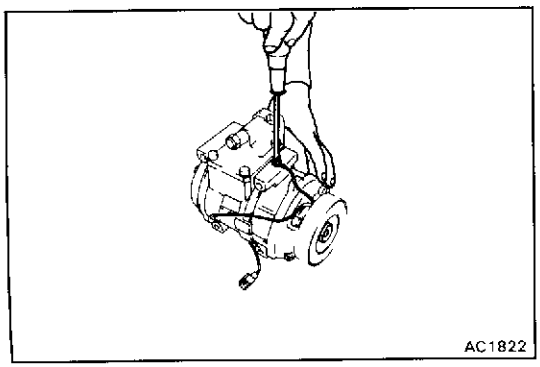
AC1822

(c) Using SST, fasten the magnetic clutch lead wi the cylinder block.

Torque: 35 kg-cm (30 in.-lb, 3.4 N·m)

SST 07110-61050

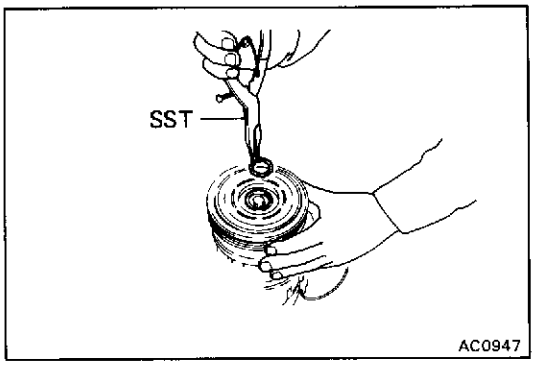

2. INSTALL ROTOR

(a) Install the rotor on the compressor shaft.

(b) Using SST, install a new snap ring.

SST 07114-84020

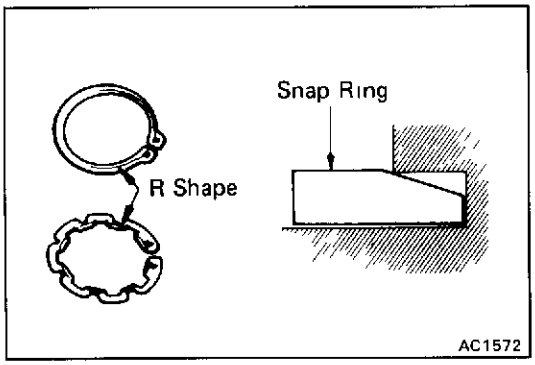

NOTICE: The snap ring should be installed so that its beveled side faces up.

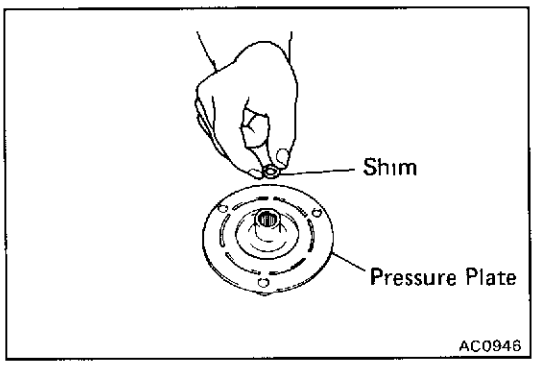

3. INSTALL PRESSURE PLATE

(a) Put the shims on the pressure plate.

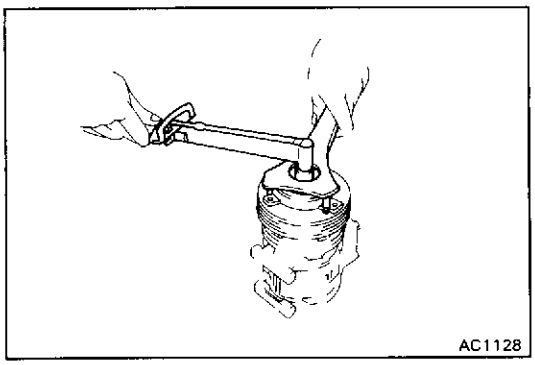

(b) Using SST, install the shaft bolt.

SST 07112-76060

Torque: 135 kg-cm (9.8 ft-lb, 13 N·m)

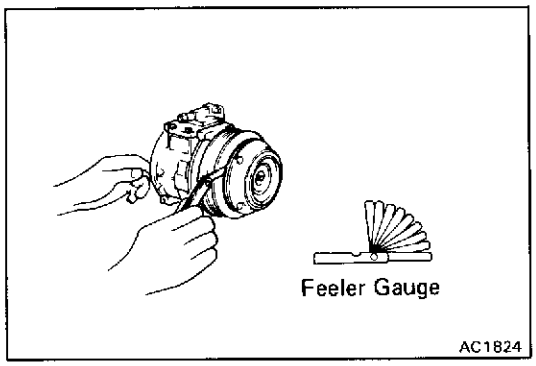

4. CHECK CLEARANCE OF MAGNETIC CLUTCH

Using a feeler gauge, check the clearance between the pressure plate and rotor.

Standard clearance: 0.5 ± 0.15 mm (0.020 ± 0.0059 in.)

If the clearance is not within tolerance, charge the number of shims to obtain the standard clearance.

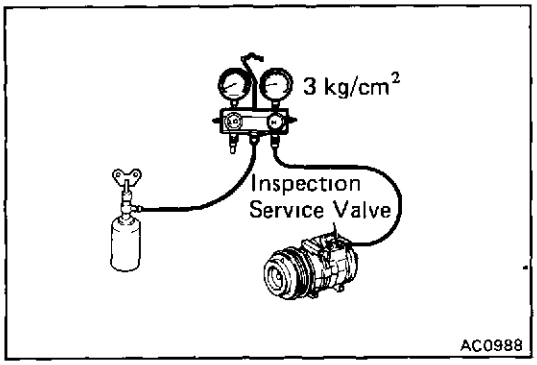

PERFORMANCE TEST OF COMPRESSOR

1. **PERFORM GAS LEAKAGE TEST**

   (a) Install the inspection service valve on the service valve.

   HINT. Use only a TOYOTA supplied inspection service valve to perform the gas leakage test.

   Part No. Suction side 88376-17020
   Discharge side 88376-22020

   (b) Charge the compressor with refrigerant through the charge valve until the pressure is 3 kg/cm² (43 psi, 294 kPa).

   (c) Using a gas leak tester, check the compressor for leaks.

   If leaks are found, check and replace the compressor.

2. **EVACUATE COMPRESSOR AND CHARGE WITH REFRIGERANT**

   Make sure the caps are tight and the compressor is free from moisture and contamination.

   HINT: When storing a compressor for an extended period, charge the compressor with refrigerant or dry nitrogen gas to prevent corrosion.

INSTALLATION OF COMPRESSOR

(See page AC-23, 24)

1. **INSTALL COMPRESSOR WITH THREE MOUNTING BOLTS**

   Torque: 280 kg-cm (20 ft-lb, 27 N·m)

2. **INSTALL DRIVE BELT**
   (See page AC-20)

3. **CONNECT TWO HOSES TO COMPRESSOR SERVICE VALVES**

   Torque: Discharge line 250 kg-cm (18 ft-lb, 25 N·m)
   Suction line 250 kg-cm (18 ft-lb, 25 N·m)

4. **CONNECT CLUTCH LEAD WIRE TO WIRING HARNESS**

5. **CONNECT NEGATIVE CABLE TO BATTERY**

6. **EVACUATE AIR FROM AIR CONDITIONING SYSTEM**

7. **CHARGE AIR CONDITIONING SYSTEM WITH REFRIGERANT AND CHECK FOR GAS LEAKAGE**

   Specified amount:
   Single A/C 900 ± 50 g (31.74 ± 1.76 oz)
   Dual A/C 1,600 ± 50 g (56.43 ± 1.76 oz)

CONDENSER

ON-VEHICLE INSPECTION

1. **CHECK CONDENSER FINS FOR BLOCKAGE OR DAMAGE**

   If the fins are clogged, wash them with water and dry with compressed air.

   NOTICE: Be careful not to damage the fins.

   If the fins are bent, straighten them with a screwdriver or pliers.

2. **CHECK CONDENSER FITTINGS FOR LEAKAGE**

   Repair as necessary

REMOVAL OF CONDENSER

(See pages AC-4, 5)

1. **DISCHARGE REFRIGERATION SYSTEM (See page AC-19)**
2. **REMOVE FRONT GRILLE AND HOOD LOCK BRACE**
3. **REMOVE RADIATOR UPPER SUPPORT**
4. **DISCONNECT DISCHARGE TUBE FROM CONDENSER INLET FITTING**
5. **DISCONNECT TWO LIQUID LINE TUBES FROM RECEIVER**

   HINT: Cap the open fittings immediately to keep moisture out of the system.

6. **REMOVE RECEIVER**
7. **REMOVE CONDENSER**

   Remove the four bolts.

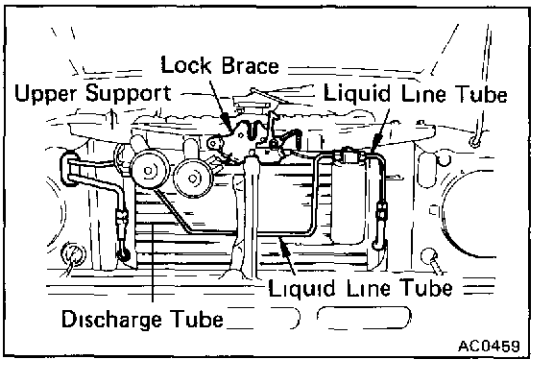

INSTALLATION OF CONDENSER

(See page AC-4, 5)

1. **INSTALL CONDENSER**

   Install the four bolts, making sure the rubber cushions fit on the mounting flanges correctly.

2. **INSTALL RECEIVER**
3. **CONNECT TWO LIQUID LINE TUBES TO RECEIVER AND DISCHARGE TUBE TO CONDENSER**

   Torque: Liquid line tube 135 kg-cm (10 ft-lb, 13 N·m)
   Discharge tube 225 kg-cm (16 ft-lb, 22 N·m)

4. **INSTALL RADIATOR UPPER SUPPORT**
5. **INSTALL FRONT GRILLE AND HOOD LOCK BRACE**
6. **IF CONDENSER IS REPLACED, ADD COMPRESSOR OIL TO COMPRESSOR Add 40 — 50 cc (1.4 — 1.7 oz)**
7. **EVACUATE, CHARGE AND TEST REFRIGERATION SYSTEM (See page AC-19)**

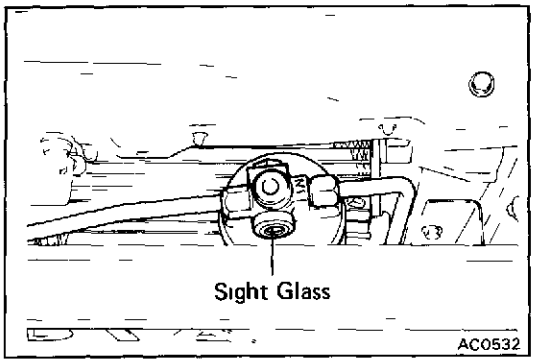

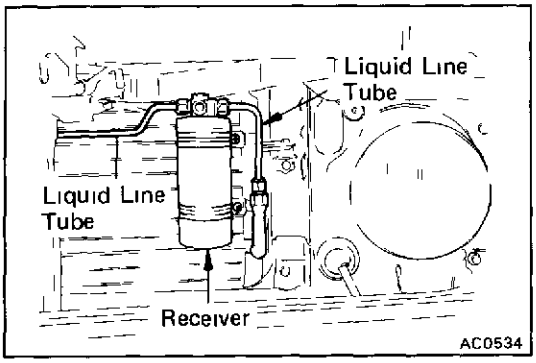

RECEIVER

ON-VEHICLE INSPECTION

CHECK SIGHT GLASS, FUSIBLE PLUG AND FITTINGS FOR LEAKAGE

Use a gas leak tester. Repair as necessary.

REMOVAL OF RECEIVER

(See page AC-4, 5)

1. **DISCHARGE REFRIGERATION SYSTEM (See page AC-19)**
2. **DISCONNECT TWO LIQUID LINE TUBES FROM RECEIVER**

   HINT: Cap the open fittings immediately to keep moisture out of the system.
3. **REMOVE RECEIVER FROM RECEIVER HOLDER**

INSTALLATION OF RECEIVER

(See page AC-4, 5)

1. **INSTALL RECEIVER IN RECEIVER HOLDER**

   HINT: Do not remove the caps until ready for connection.
2. **CONNECT TWO LIQUID LINE TUBES TO RECEIVER**

   Torque: 135 kg-cm (10 ft-lb, 13 N·m)
3. **IF RECEIVER WAS REPLACED, ADD COMPRESSOR OIL TO COMPRESSOR**

   Add 20 cc (0.7 oz)
4. **EVACUATE, CHARGE AND TEST REFRIGERATION SYSTEM (See page AC-19)**

COOLING UNIT

ON-VEHICLE INSPECTION OF EXPANSION VALVE

1. **CONNECT MANIFOLD GAUGE TO COMPRESSOR**
2. **CHECK EXPANSION VALVE OPERATION**

   (a) Run the engine at fast idle with the air conditioning on.

   (b) Check that the low pressure reading is between 0.5 — 5.0 kg/cm^2 (7 — 71 psi, 49 — 490 kPa).

   If the reading is too low, check and replace the expansion valve and/or receiver

   If the reading is too high, tighten the remote valve holders and/or replace the expansion valve.

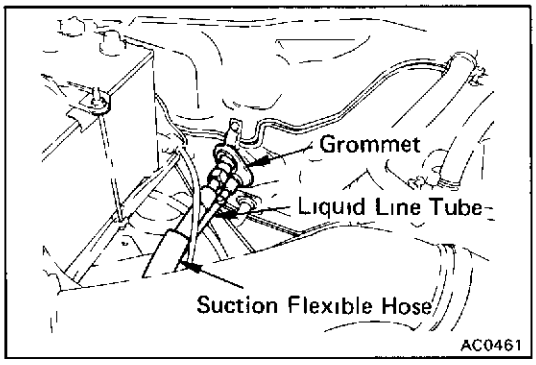

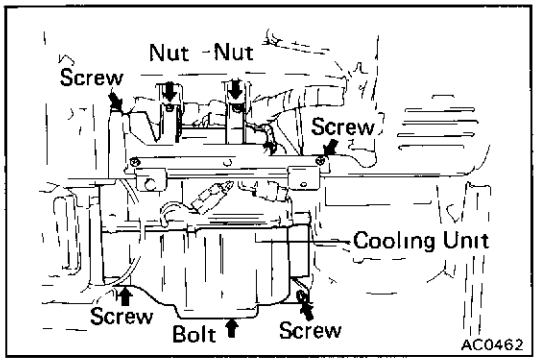

REMOVAL OF COOLING UNIT

1. **DISCONNET NEGATIVE CABLE FROM BATTERY**
2. **DISCHARGE REFRIGERATION SYSTEM**
   (See page AC-19)
3. **DISCONNECT SUCTION FLEXIBLE HOSE FROM COOLING UNIT OUTLET FITTING**
4. **DISCONNECT LIQUID LINE TUBE FROM COOLING UNIT INLET FITTING**

   NOTE: Cap the open fittings immediately to keep moisture out of the system.
5. **REMOVE GROMMETS FROM INLET AND OUTLET FITTINGS**
6. **REMOVE FOLLOWING COMPONENTS:**
   (a) Glove box
   (b) Duct
7. **DISCONNECT FOLLOWING CONNECTORS:**
   (a) Temp control switch connector
   (b) Connector connected to vehicle wire harness
8. **REMOVE COOLING UNIT**

   Remove the two nuts, the four screws and one bolt.
9. **REMOVE A/C WIRE HARNESS FROM COOLING UNIT**

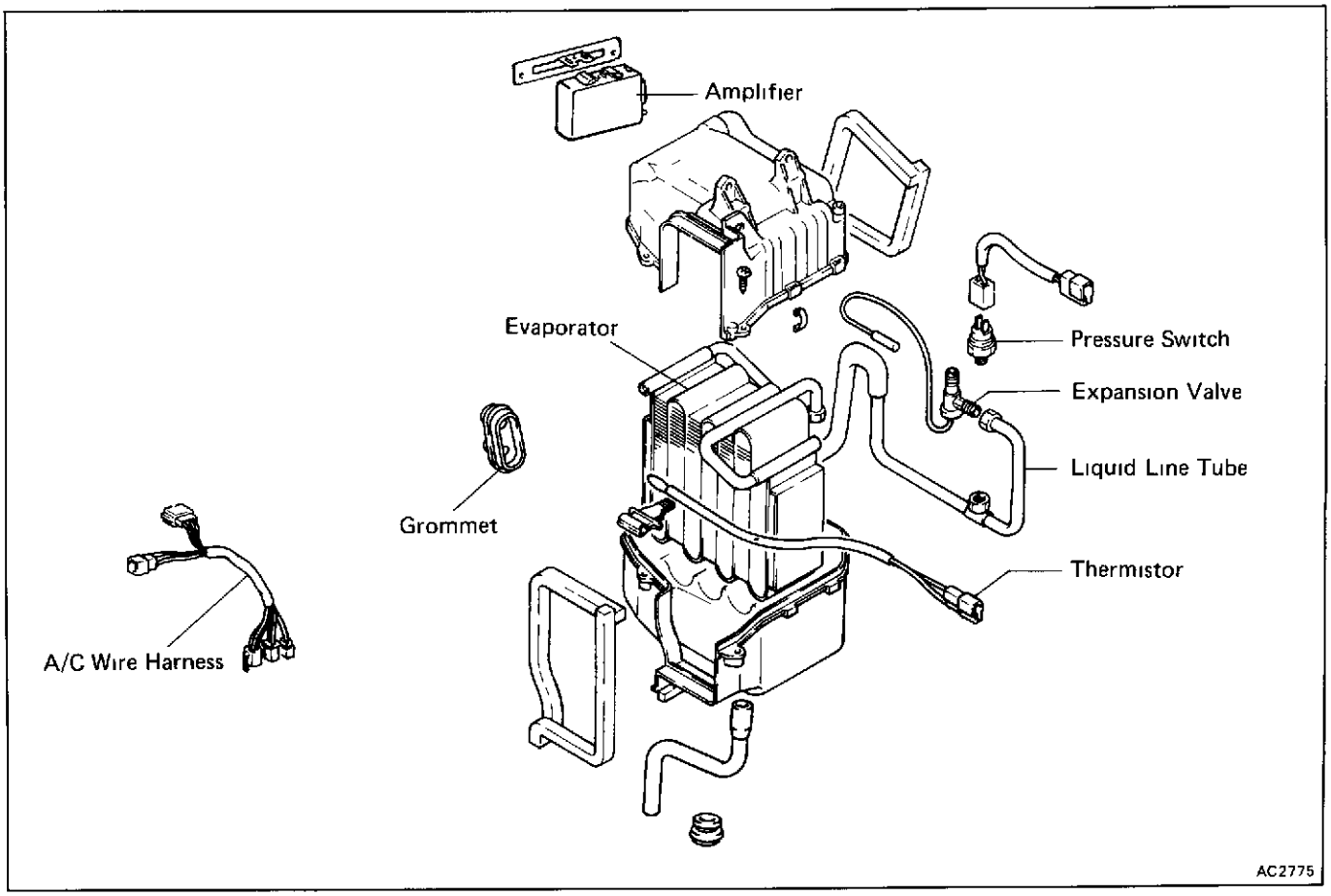

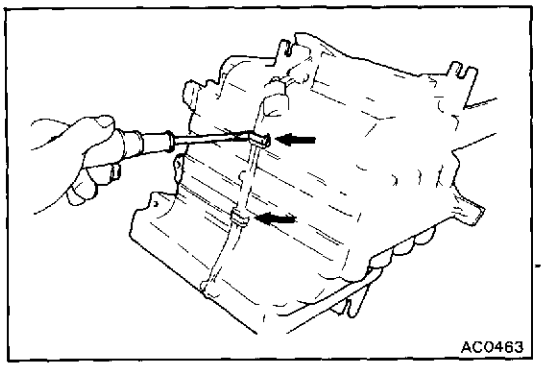

DISASSEMBLY OF COOLING UNIT

(See page AC-39)

1. **REMOVE LOWER AND UPPER CASE FROM EVAPORATOR**

   Using a screwdriver, remove the two clamps and four screws.

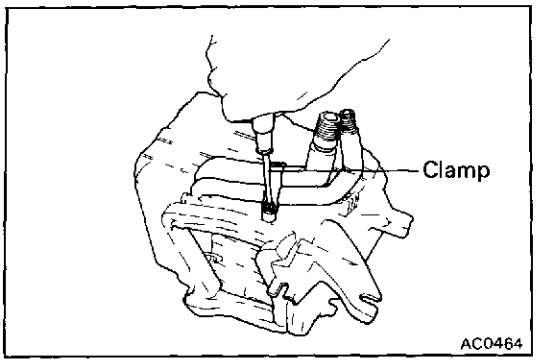

2. **REMOVE CLAMP**

   Remove two screws.

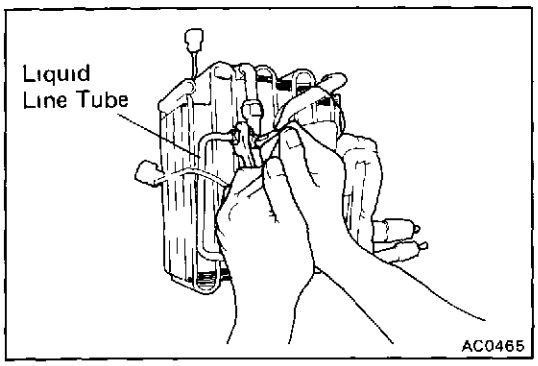

3. **REMOVE COMPONENTS FROM EVAPORATOR**

   (a) Remove the heat insulator.

   (b) Disconnect the liquid line tube from inlet fitting of the expansion valve.

   (c) Disconnect the expansion valve from the inlet fitting of the evaporator

   (d) Remove the pressure switch, if necessary.

Evaporator

INSPECTION OF EVAPORATOR

1. **CHECK EVAPORATOR FINS FOR BLOCKAGE**

   If the fins are clogged, clean them with compressed air.

   NOTICE: Never use water to clean the evaporator.

2. **CHECK FITTINGS FOR CRACKS OR SCRATCHES**

   Repair as necessary.

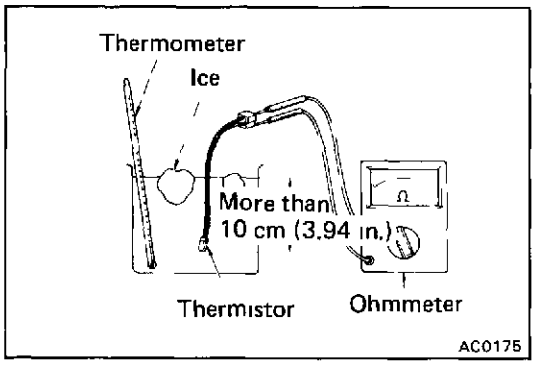

Thermistor

INSPECTION OF THERMISTOR

CHECK THERMISTOR OPERATION

(a) Place the thermistor in cold water. While varying the temperature of the water, measure the resistance at the connector and, at the same time, measure the temperature of the water with a thermometer.

(b) Compare the two readings on the chart

If the intersection is not between the two lines, replace the thermistor.

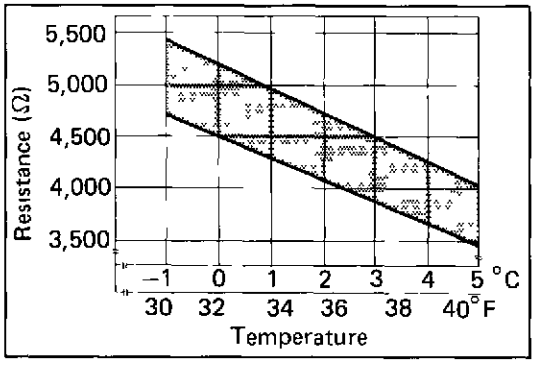

ASSEMBLY OF COOLING UNIT

(See page AC-39)

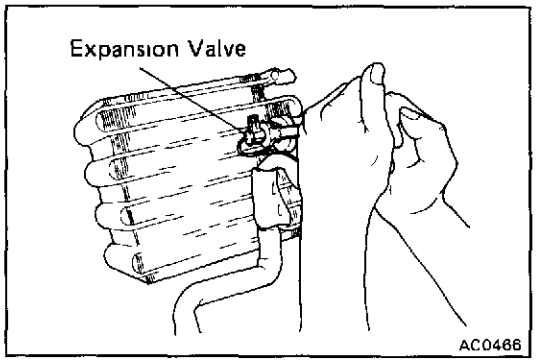

1. INSTALL COMPONENTS ON EVAPORATOR

(a) Connect the expansion valve to the inlet fitting of the evaporator. Torque the nut.

Torque: 235 kg-cm (17 ft-lb, 23 N·m)

HINT: Be sure that the O-ring is positioned on the tube fitting.

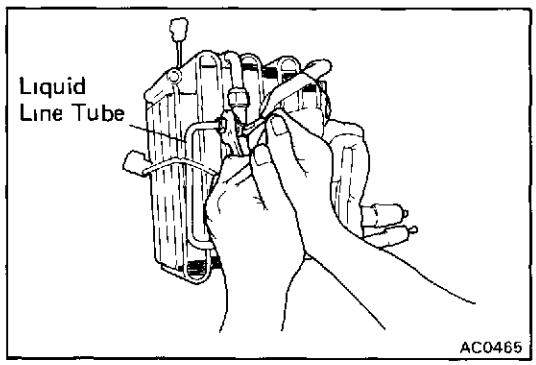

(b) Connect the liquid line tube to the inlet fitting of the expansion valve. Torque the nut.

Torque: 135 kg-cm (10 ft-lb, 13 N·m)

(c) Install the pressure switch, if removed.

Torque: 135 kg-cm (10 ft-lb, 13 N·m)

(d) Install the heat insulator.

2. INSTALL THERMISTOR ON EVAPORATOR

3. INSTALL UPPER AND LOWER CASES ON EVAPORATOR

INSTALLATION OF COOLING UNIT

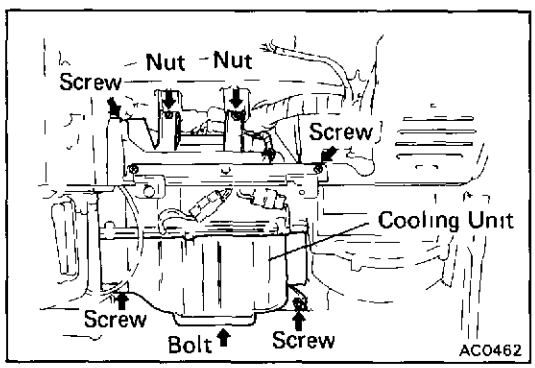

1. INSTALL A/C WIRE HARNESS TO COOLING UNIT

2. INSTALL COOLING UNIT

Install the cooling unit with the two nuts, the four screws and one bolt.

NOTICE: Be careful not to pinch the wire harness while installing the cooling unit.

3. INSTALL GLOVE BOX AND DUCT

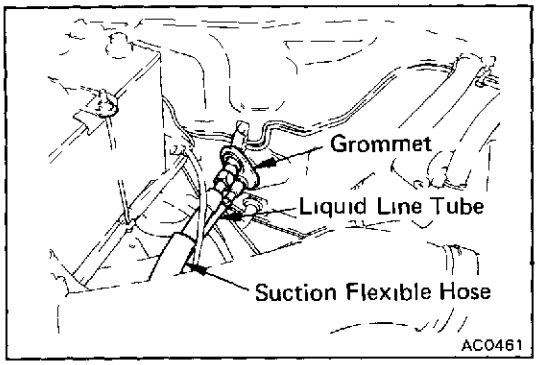

4. **INSTALL GROMMETS ON INLET AND OUTLET FITTINGS**
5. **CONNECT LIQUID LINE TUBE TO COOLING UNIT INLET FITTINGS**

   Torque: 135 kg-cm (10 ft-lb, 13 N·m)
6. **CONNECT SUCTION FLEXIBLE HOSE TO COOLING UNIT OUTLET FITTING**

   Torque: 325 kg-cm (24 ft-lb, 32 N·m)
7. **IF EVAPORATOR WAS REPLACED, ADD COMPRESSOR OIL TO COMPRESSOR**

   Add 40 — 50 cc (1.4 — 1.7 oz)
8. **CONNECT NEGATIVE CABLE TO BATTERY**
9. **EVACUATE, CHARGE AND TEST REFRIGERATION SYSTEM (See page AC-20)**

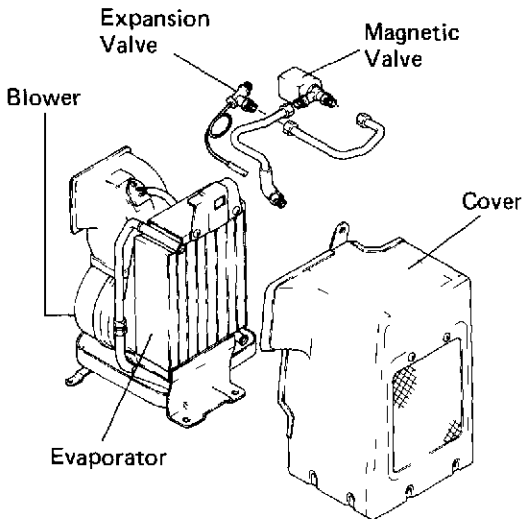

AC0

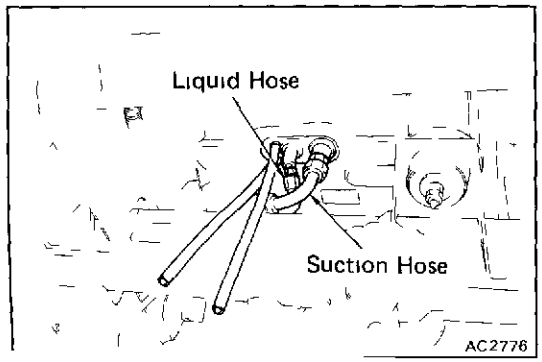

REAR COOLING UNIT

REMOVAL OF COOLING UNIT

1. **DISCONNECT SUCTION AND LIQUID HOSE**

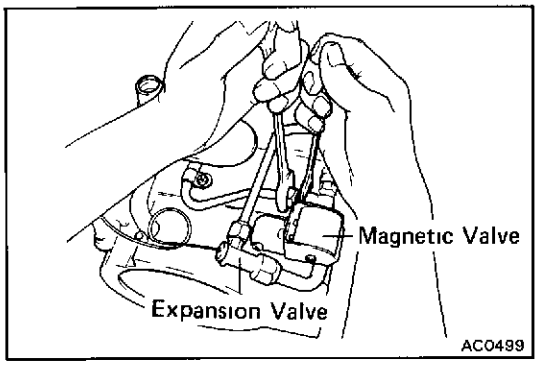

4. **REMOVE COMPONENTS FROM REAR COOLING UNIT**
   (a) Remove the magnetic valve from the cooling unit.
   (b) Disconnect the magnetic valve from inlet fitting of expansion valve.
   (c) Disconnect the expansion valve from the inlet fitting of the evaporator.
   (d) Remove the pressure switch if necessary.

5. **CHECK THERMISTOR AND EXPANSION VALVE IN SAME ORDER AS FRONT COOLING UNIT AND EXPANSION VALVE**

ASSEMBLY AND INSTALLATION OF REAR COOLING UNIT

ASSEMBLE AND INSTALL REAR COOLING UNIT IN REVERSE SEQUENCE OF REMOVAL AND DISASSEMBLY

Torque: Suction Hose 135 kg-cm (10 ft-lb, 13 N·m)
Discharge Hose 325 kg-cm (24 ft-lb, 32 N·m)

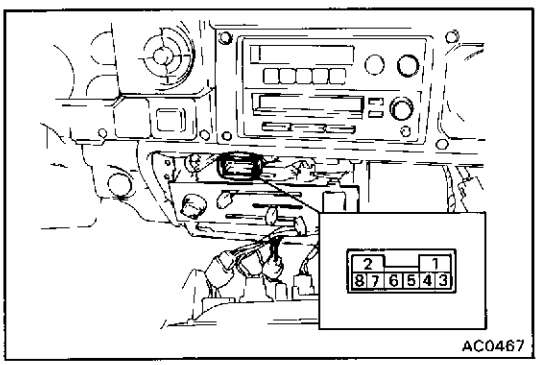

TEMP. CONTROL RESISTOR

ON-VEHICLE INSPECTION

1. **DISCONNECT NEGATIVE CABLE FROM BATTERY**
2. **REMOVE CENTER CLUSTER**
3. **DISCONNECT TEMP. CONTROL RESISTOR CONNECTOR**

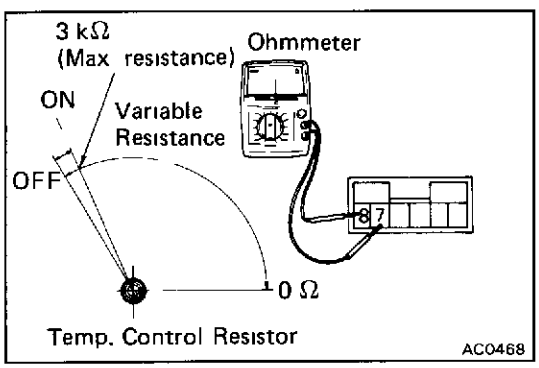

4. **CHECK TEMP. CONTROL RESISTOR FOR RESISTANCE**
   Using an ohmmeter, check for resistance between the terminals while rotating the resistor
   If an ohmmeter indicates incorrect resistance, replace the resistor
5. **CONNECT TEMP. CONTROL RESISTOR CONNECTOR**
6. **INSTALL CENTER CLUSTER**
7. **CONNECT NEGATIVE CABLE TO BATTERY**

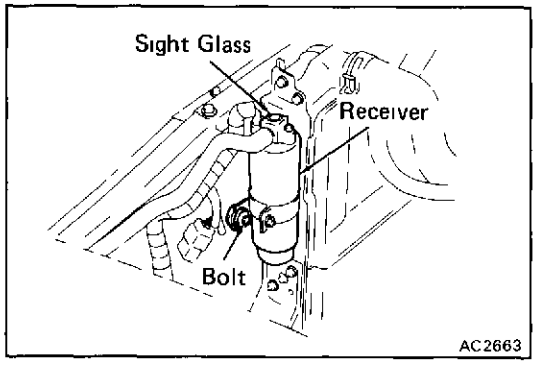

EXPANSION VALVES

Front A/C Expansion Valve

ON-VEHICLE INSPECTION

1. **INSPECT REFRIGERANT VOLUME**
   (See page AC-18)
2. **INSTALL MANIFOLD GAUGE SET**
3. **TURN FRONT A/C SWITCH ON AND BLOWER SWITCH TO HI POSITION**
4. **RUN ENGINE AT APPROX. 2,000 RPM FOR AT LEAST FIVE MINUTES**
5. **INSPECT EXPANSION VALVE**

   If the expansion valve is clogged, the low pressure reading is normal and only the front A/C is not cooling, check for the malfunction of the expansion valve.

REMOVAL OF EXPANSION VALVE

See Disassembly of Front Cooling Unit on page AC-40

INSTALLATION OF EXPANSION VALVE

See Assembly of Front Cooling Unit on page AC-41

Rear Cooler Expansion Valve

ON-VEHICLE INSPECTION

Turn the rear cooler switch ON and rear blower switch to the front A/C expansion valve.

HINT. If the low pressure reading is normal and cool air is only failing to come out of the rear cooler, check for a malfunction of the expansion valve.

REMOVAL OF EXPANSION VALVE

See disassembly of Rear Cooling Unit on page AC-43

INSTALLATION OF EXPANSION VALVE

See Assembly of Rear Cooling Unit on page AC-44

A/C CONTROL ASSEMBLY

LHD

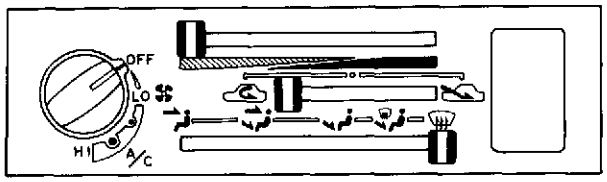

RHD

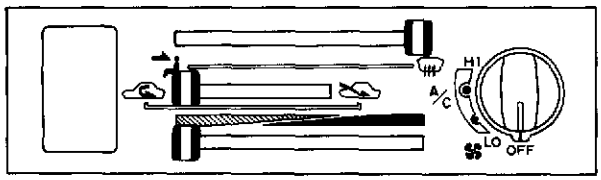

AC2781 AC2782

Blower Switch

INSPECTION OF SWITCH

INSPECT SWITCH CONTINUITY

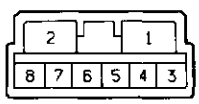

O82

	Terminal / Switch position	1	2	3	4	5	6	7	8
Blower Switch	OFF		○						
	I		○	○	○				
	II		○	○		○			
	III		○	○			○		
	IV (HI)	○	○	○					
A/C Switch	OFF								
	ON							○	○

If continuity is not as specified, replace the switch.

LHD

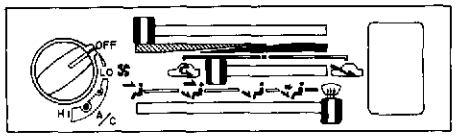

AC2798

A/C Control Levers

INSPECTION OF A/C CONTROL LEVERS

INSPECT LEVERS OPERATION

Move the control levers left and right and check for stiffness and binding through the full range of levers.

If operation is not as specified, replace the A/C control assembly.

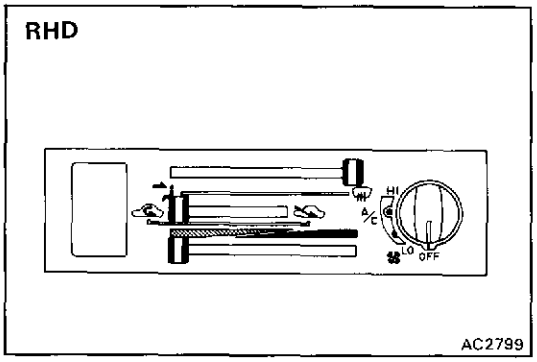

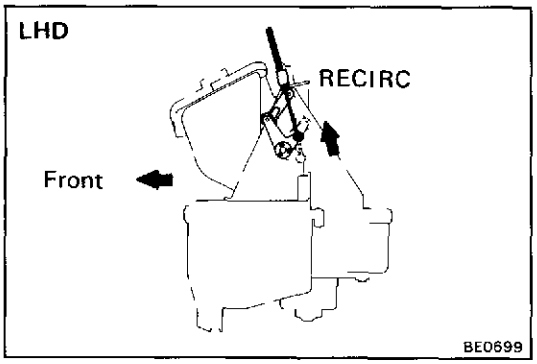

ADJUSTMENT OF CONTROL CABLES

1 ADJUST AIR INLET DAMPER CONTROL CABLE

Set the air inlet damper and the air inlet control lever to "RECIRC", then install the control cable and lock the clamp.

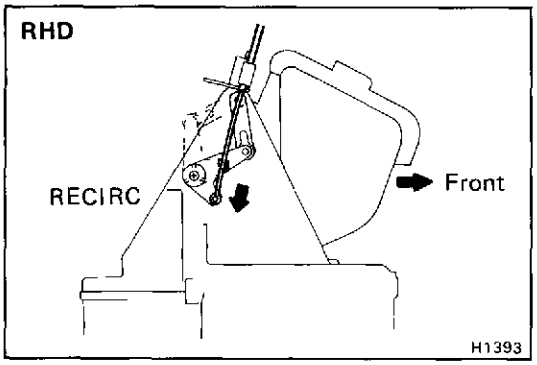

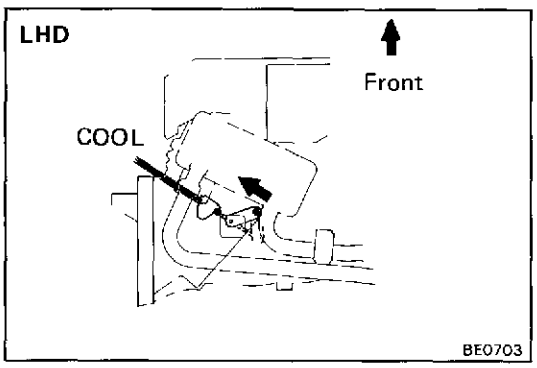

2 ADJUST AIR MIX DAMPER CONTROL CABLE

Set the air mix damper and the temperature control lever to "COOL", then install the control cable and lock the clamp.

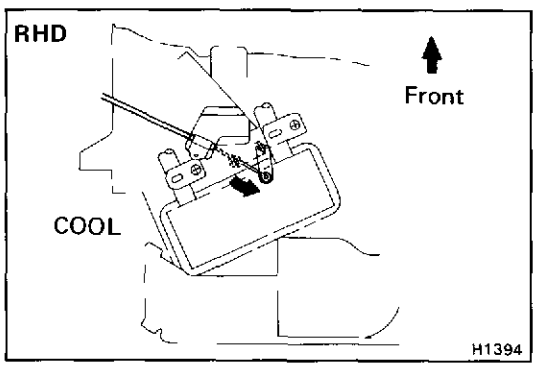

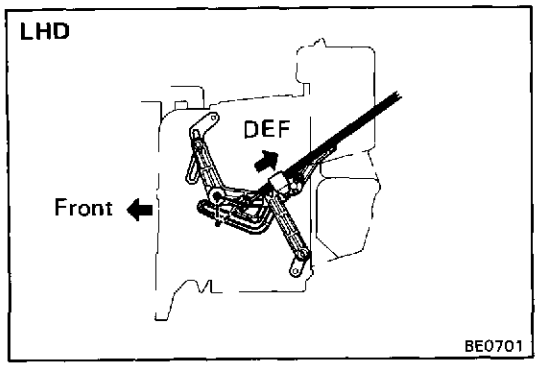

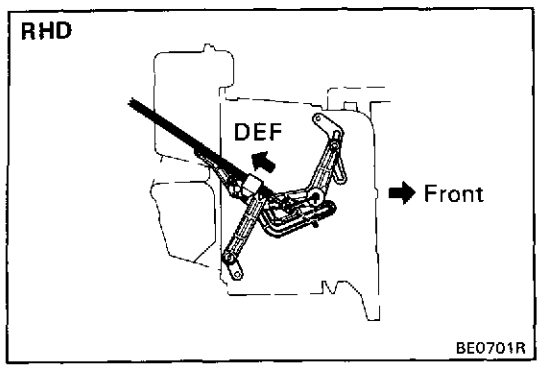

3 ADJUST MODE DAMPER CONTROL CABLE

Set the mode damper and the mode control lever to "DEF", then install the control cable and lock the clamp.

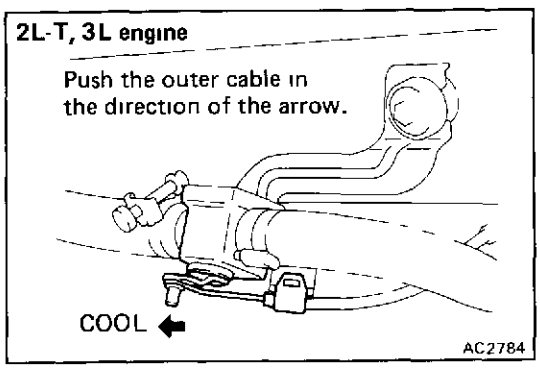

4 ADJUST WATER VALVE CONTROL CABLE

Set the water valve and the temperature control lever to "COOL", then install the control cable and lock the clamp.

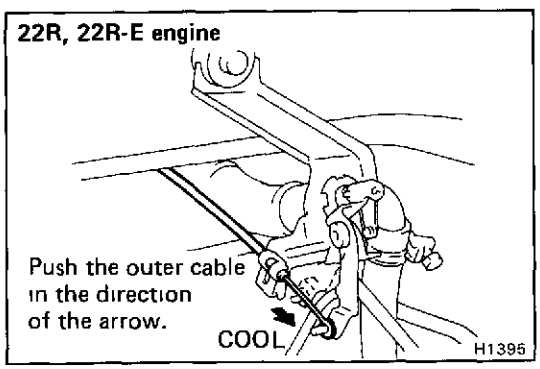

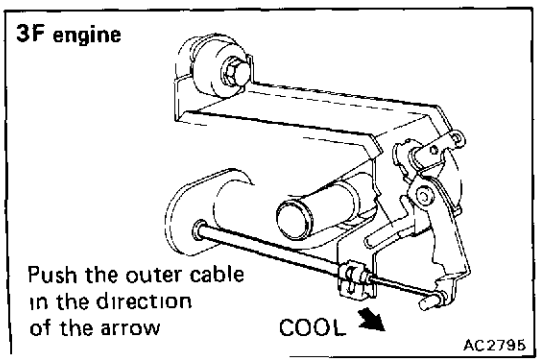

PRESSURE SWITCH

(See page AC-39)

INSPECTION OF PRESSURE SWITCH

1. **CHECK REFRIGERANT PRESSURE**

   (a) Connect the hoses of the manifold gauge set to the compressor service valves and observe the gauge reading.

   (b) The gauge reading must be more than 2.1 kg/cm^2 (30 psi, 206 kPa) when the ambient temperature is higher than 0°C (32°F).

   If the pressure is less than 2.1 kg/cm^2 (30 psi, 206 kPa), charge the refrigerant.

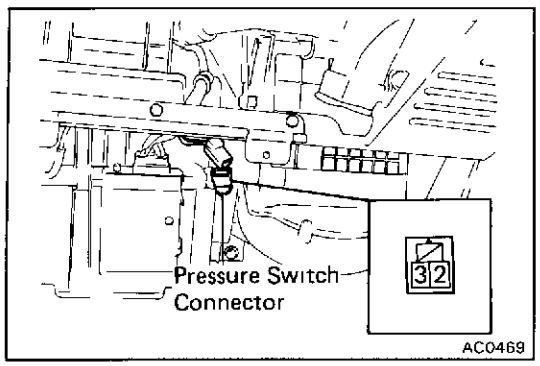

2. **CHECK PRESSURE SWITCH**

   (a) Remove the glove box.

   (b) Disconnect the lead wires of the A/C harness.

   (c) Using an ohmmeter, check the continuity between the two terminals of the pressure switch.

   The ohmmeter must indicate zero ohms.

   If there is no continuity, replace the pressure switch

   (See page AC-39)

3. **REINSTALL REMOVED PARTS IN REVERSE ORDER**

REFRIGERANT LINES

ON-VEHICLE INSPECTION

1. **INSPECT HOSES AND TUBES FOR LEAKAGE**

   Use a gas leak tester. Replace, if necessary

2. **CHECK THAT HOSE AND TUBE CLAMPS ARE NOT LOOSE**

   Tighten or replace, as necessary.

REPLACEMENT OF REFRIGERANT LINES

(See page AC-4, 5)

1. **DISCHARGE REFRIGERATION SYSTEM**
   (See page AC-19)

2. **REPLACE FAULTY TUBE OR HOSE**

   NOTE. Cap the open fittings immediately to keep moisture out of the system.

   Torque specification for O-ring fittings

Fitting size	Torque
0.31 in. tube for liquid line	135 kg-cm (10 ft-lb, 13 N m)
0.50 in. tube for discharge line	225 kg-cm (16 ft-lb, 22 N m)
0.62 in. tube for suction line	325 kg-cm (24 ft-lb, 32 N m)

3. **EVACUATE, CHARGE AND TEST REFRIGERATION SYSTEM (See page AC-19)**

BLOWER SWITCHES

Front Heater Blower Switch

INSPECTION OF BLOWER SWITCH

INSPECT SWITCH CONTINUITY

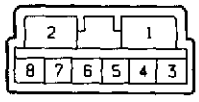

Terminal / Switch position	1	2	3	4	5	6
OFF						
I		○	○	○		
II		○	○		○	
III		○	○			○
IV (HI)	○	○	○			

082

If continuity is not as specified, replace the switch.

Rear Heater Blower Switch

INSPECTION OF BLOWER SWITCH

INSPECT SWITCH CONTINUITY

Terminal / Switch position	1	2	3	4
HI	○	○		○
OFF				
LO		○	○	○

H42

If continuity is not as specified, replace the switch.

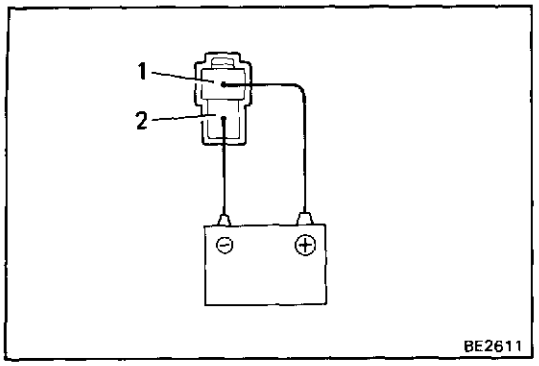

BLOWER MOTORS

Front Blower Motor

INSPECTION OF FRONT BLOWER MOTOR

INSPECT BLOWER MOTOR

Connect the positive (+) lead from the battery to terminal 1 and the negative (—) lead to terminal 2, then check that the motor operation is smooth.

If operation is not as specified, replace the motor

Rear Blower Motor

INSPECTION OF REAR BLOWER MOTOR

INSPECT BLOWER MOTOR

Check the motor the same way as for the front blower motor.

BLOWER RESISTORS

Front Blower Resistor

INSPECTION OF FRONT BLOWER RESISTOR

INSPECT BLOWER RESISTOR CONTINUITY

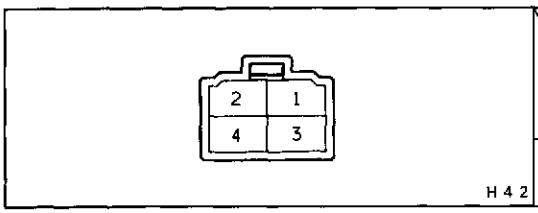

Terminal / Condition	1	2	4	3
Constant	O—/\/\/\/—O—/\/\/\/—O—/\/\/\/—O			

If continuity is not as specified, replace the blower resistor.

Rear Blower Resistor

INSPECTION OF REAR BLOWER RESISTOR

INSPECT BLOWER RESISTOR CONTINUITY

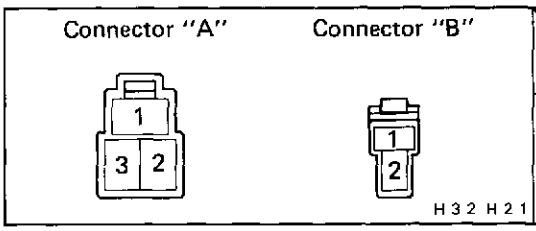

Terminal / Condition	Connector "A" 1	Connector "A" 2	Connector "A" 3	Connector "B" 1	Connector "B" 2
Constant	O—/\/\/\/—O—/\/\/\/—O		O—/\/\/\/—O		O

If continuity is not as specified, replace the blower resistor.

HEATER RELAYS

Front Heater Relay

INSPECTION OF RELAY

INSPECT RELAY CONTINUITY

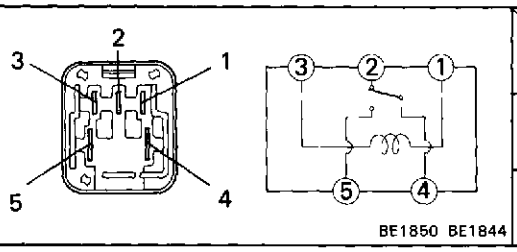

BE1850 BE1844

Terminal / Condition	1	2	3	4	5
Constant	○	∿∿∿	○	○	
Apply battery boltage to terminals 1 and 3.				○	○

If continuity is not as specified, replace the relay.

Rear Heater Relay

INSPECTION OF RELAY

INSPECT RELAY CONTINUITY

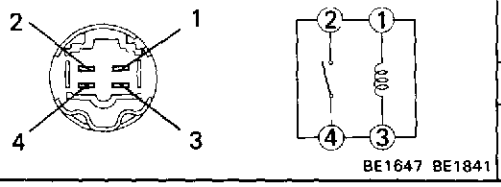

BE1647 BE1841

Terminal / Condition	1	2	3	4
Constant	○	∿∿∿	○	
Apply battery voltage to terminals 1 and 3.		○		○

If continuity is not as specified, replace the relay.

VACUUM SWITCHING VALVE (VSV)

(See page AC-4)

INSPECTION OF VSV

1. DISCONNECT VACUUM HOSES AND CONNECTOR FROM VSV

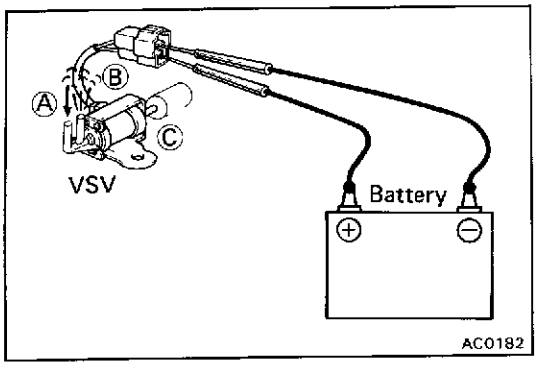

2. CHECK VACUUM CIRCUIT CONTINUITY IN VSV BY BLOWING AIR INTO PIPE

(a) Connect the VSV terminals to the battery terminals as shown.

(b) Blow into pipe A, and check that air comes out of pipe B.

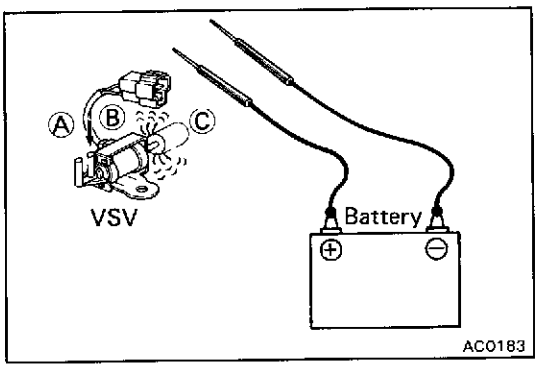

(c) Disconnect the battery.

(c) Blow into pipe "B" and check that air comes out of filter "C" — not out of pipe "A".

If a problem is found, replace the VSV.

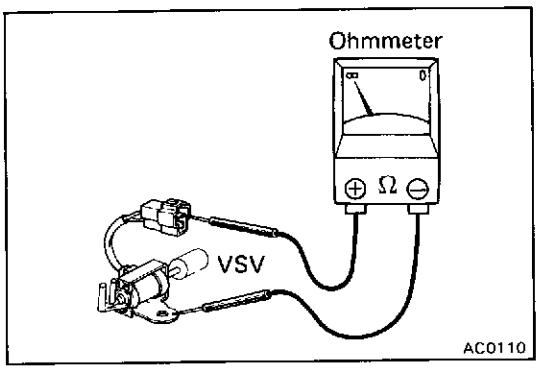

3. CHECK FOR SHORT CIRCUIT

Using an ohmmeter, check that there is no continuity between each terminal and the VSV body.

If a short circuit is found, repair or replace the VSV.

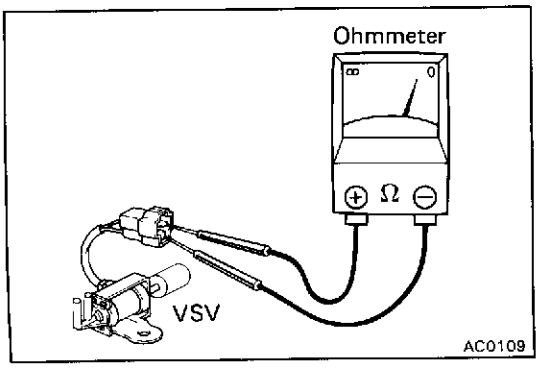

4. CHECK FOR OPEN CIRCUIT

Using an ohmmeter, measure the resistance between two terminals of the VSV.

Specified resistance: 37 — 44 Ω at 20°C (68°F)

If the resistance is not within specification, replace the VSV.

Wire Harness Side

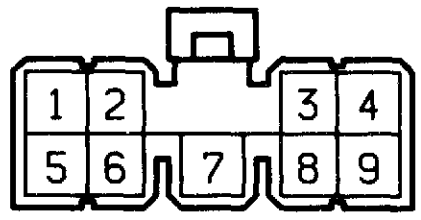

G91

AIR CONDITIONER AMPLIFIER

Inspection of Amplifier

INSPECT AMPLIFIER CIRCUIT

Disconnect the amplifier and inspect the connector on the wire harness side as shown in the chart below.

Test conditions:

(1) Ignition: ON

(2) Temperature control lever: MAX. COOL

(3) Blower switch: HI

For 22R, 3F engines

Check for	Tester connection	Condition	Specified value
Voltage	2 — 6	Turn A/C switch on	No voltage
		Turn A/C switch off	Battery voltage
	3 — 6	Turn A/C switch on	No voltage
		Turn A/C switch off	Battery voltage
	5 — 6	Start engine	Approx. 10 to 14 V
		Stop engine	No voltage
Resistance	3 — 4	Constant	Approx 40 Ω at 25°C (77°F)
	6 — 7	Constant	Approx 3 8 Ω
	8 — 9	Max. cool	Apporx 0 Ω
		Min. cool	Apporx. 3 KΩ
	6 — 9	Constant	Approx. 1 5 KΩ at 25°C (77°F)

For 2L-T, 3L, 1PZ engines

Check for	Tester connection	Condition	Specified value
Voltage	3 — 6	Turn ignition switch on	Battery voltage
		Turn ignition switch off	No voltage
	2 — 6	Turn A/C switch on	Battery voltage
		Turn A/C switch off	No voltage
Resistance	8 — 9	Max. cool	Approx. 0 Ω
		Min cool	Approx. 3 KΩ
	6 — 9	Constant	Approx. 1 5 KΩ
	6 — 7	Constant	Approx. 3.5 Ω
Continuity	4 — 6	Water temp switch off [Approx 110°C (230°F)]	No continuity
		Water temp switch on [Approx 110°C (230°F)]	Continuity

ELECTRICAL WIRING DIAGRAMS

HOW TO READ THIS SECTION

PIN NUMBER

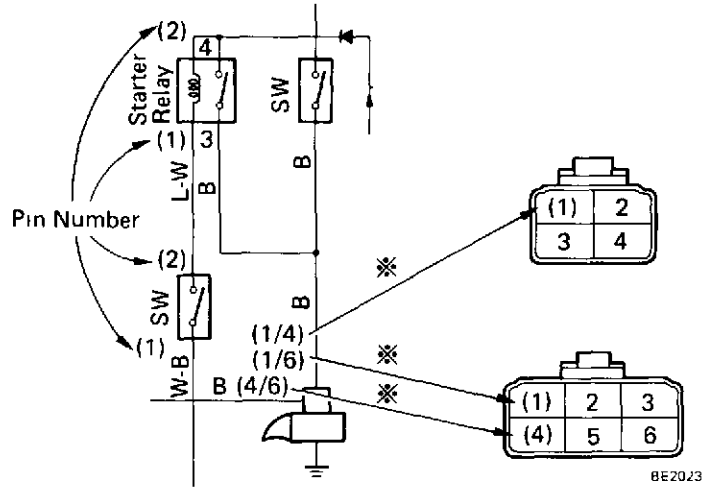

※ When connectors with different numbers of terminals are used with the same parts, the pin number and the numbers of terminals are specified
e g (1/4) = No 1 pin/4 terminals connector

Numbered in order from upper left to lower right

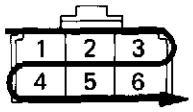

Female

Numbered in order from upper right to lower left

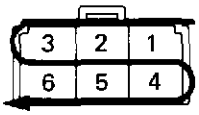

Male

BE0832

Male & female connectors distinguished by shape of their internal pins.

- All connectors are shown from the open end, and the lock is on top.

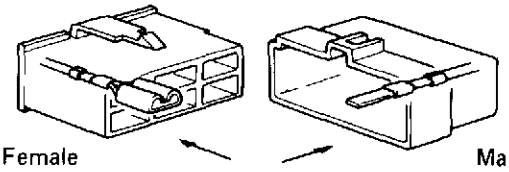

BE0833

JUNCTION BLOCK OR RELAY BLOCK

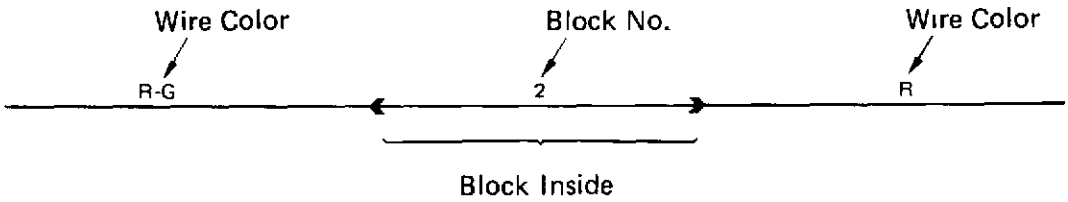

WIRE COLOR

Wire colors are indicated by an alphabetical code.

B = Black	BR = Brown	G = Green	GR = Gray	L = Blue
LG = Light Green	O = Orange	P = Pink	R = Red	V = Violet
W = White	Y = Yellow			

The 1st letter indicates the basic wire color and the 2nd indicates the stripe color.

Example. R-G indicates a Red wire with a Green stripe.

ABBREVIATION

The following abbreviations are used in this wiring diagram.

A/C	= Air Conditioner	RR	= Rear
A/T	= Automatic Transmission	SC	= Spark Control
CB	= Circuit Breaker	SW	= Switch
ECU	= Electronic Control Unit	TP	= Throttle Positioner
EFI	= Electronic Fuel Injection	VSV	= Vacuum Switching Valve
Ex.	= Except	w/	= With
FL	= Fusible Link	w/o	= Without
LH	= Left-Hand	2WD	= Two Wheel Drive Vehicle
M/T	= Manual Transmission	4WD	= Four Wheel Drive Vehicle
RH	= Right-Hand		

SYSTEM INDEX

LAND CRUISER 70 (Light-Duty)

SYSTEMS	LOCATION	SYSTEMS	LOCATION
Accessory meter	3-8	Interior Light	4-6
Air Conditioner, Cooler and Heater	3-2	Light Reminder	5-8 (Europe)
Back-Up Light	4-4	Moon Roof	8-4
Charging	2-4	Power Source	1-1
Cigarette Lighter	4-7	Power Window	8-7
Clock	4-7	Radio and Player	4-8
Combination Meter	3-5	Rear Fog Light	5-6 (Europe Ex Ireland)
Door Lock	7-7	Rear Window Defogger	4-1
ECD	1 7 (2L T Austria)	Rear Wiper and Washer	4-4
EFI	1-4 (22R-E)	Remote Control Mirror	2-8 (General)
Emission Control	2-6 (22R)	Seat Belt Warning	3-6 (Middle East)
Fog Light	5 1 (General Ex Australia)	Starting	1-2
Front Wiper and Washer	4-2	Stop Light	4-5
Fuel Heater	3 7 (2L T Europe)	Sun Roof	8-4
Glow Plug	2 2 (2L T Ex Austria) 2 3 (3L)	Taillight and Illumination	5-2 (General) 6-5 (Europe)
Headlight Cleaner	4-3 (Europe)	Trailer Socket	6-2 (Europe) 6-8 (General)
Headlight	5-3 (General) 5-5 (Europe)	Turn Signal and Hazard	5-7 (General) 6-1 (Europe)
Headlight Beam Level Control	8-2	Winch	6-7
Horn	4-1	4WD	7-3
Ignition	2-1 (22R)		

LAND CRUISER 70 (Light-Duty) ELECTRICAL WIRING DIAGRAM

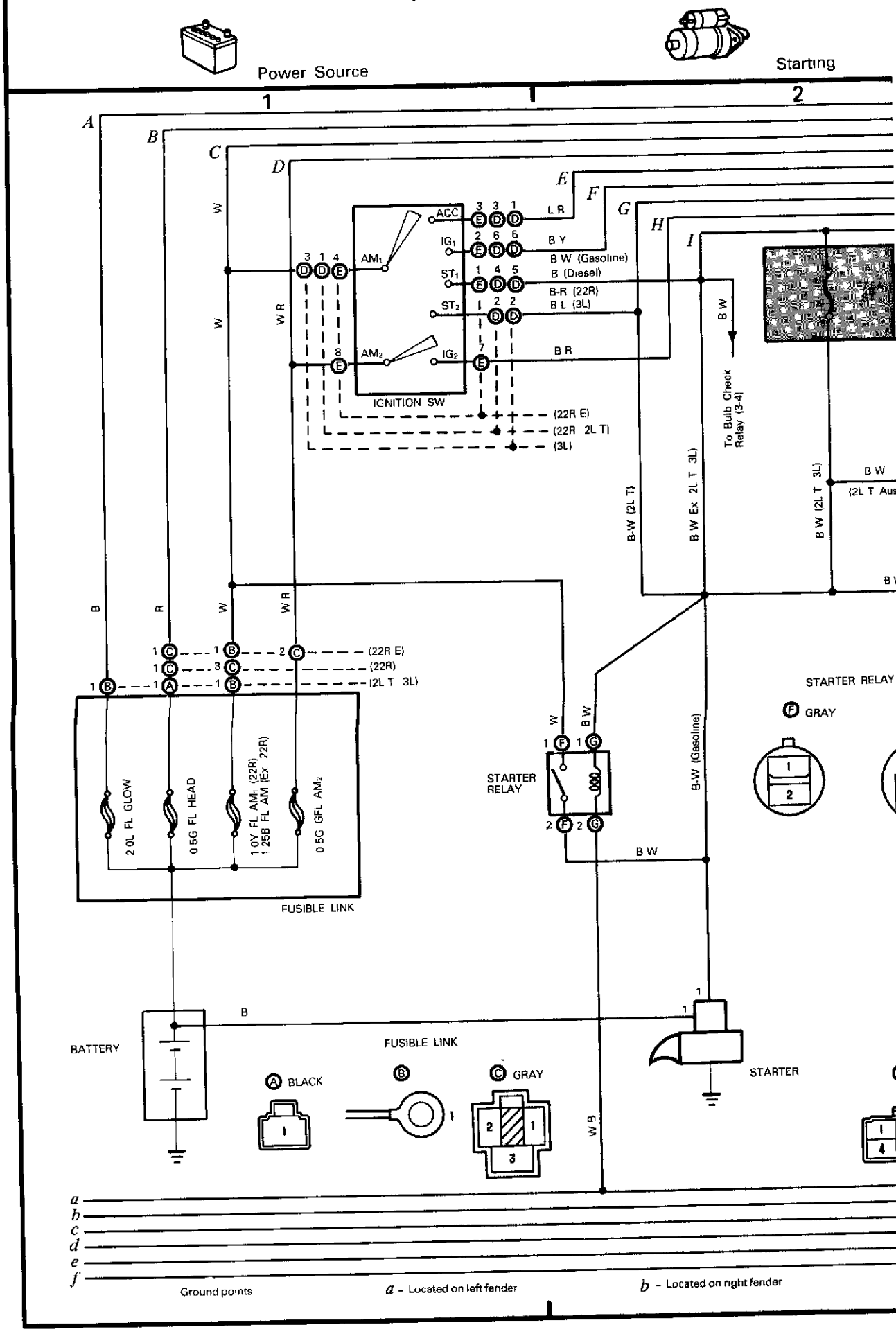

Page 1 to Page 8)

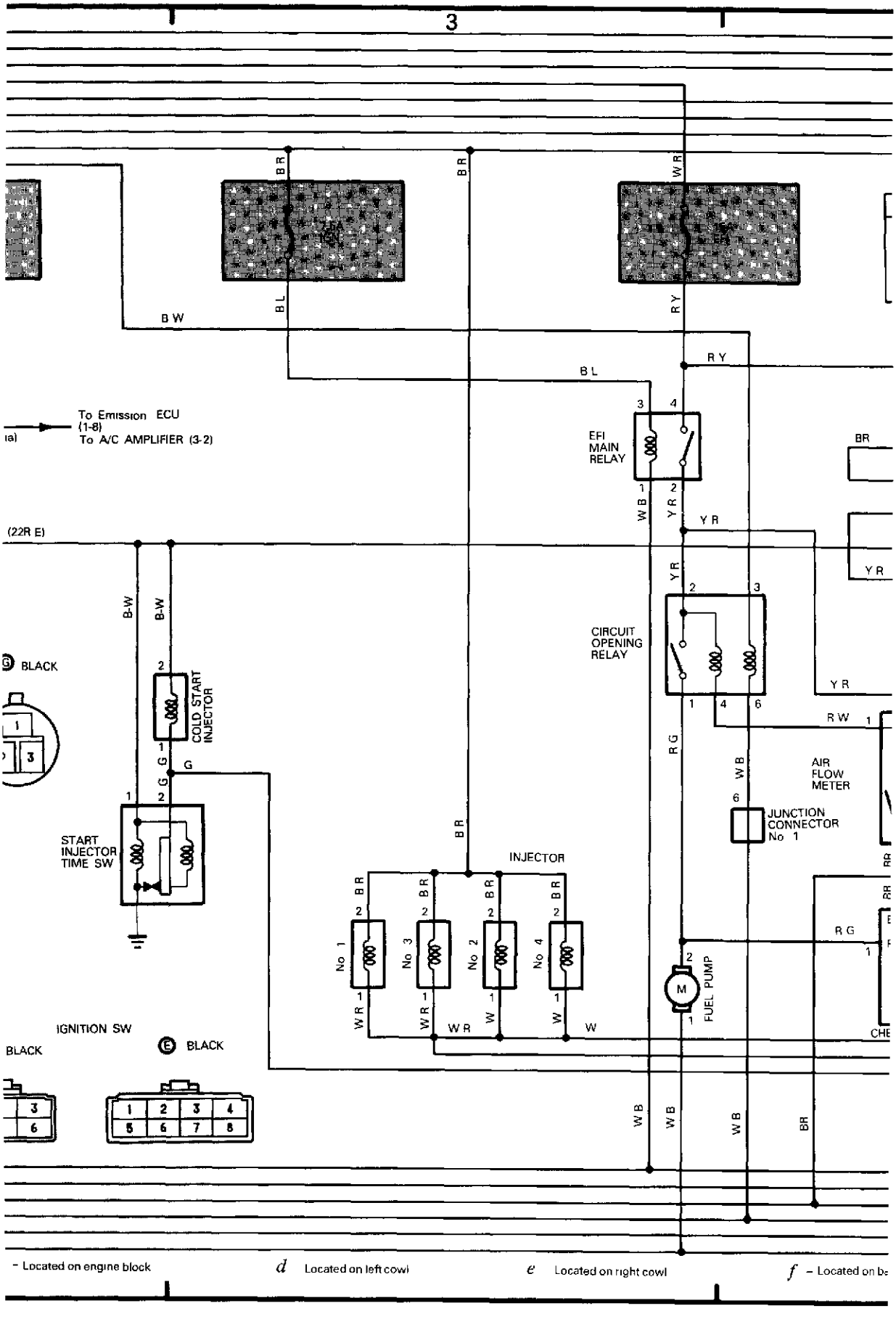

EFI

EFI (22R-E)

4 5 7

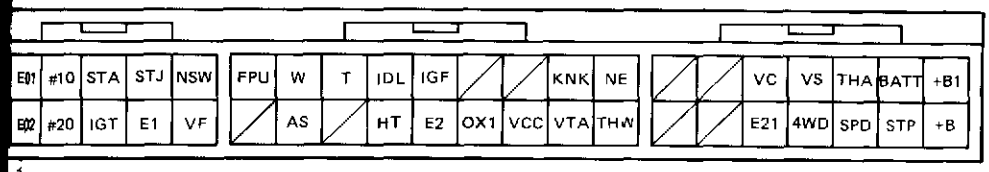

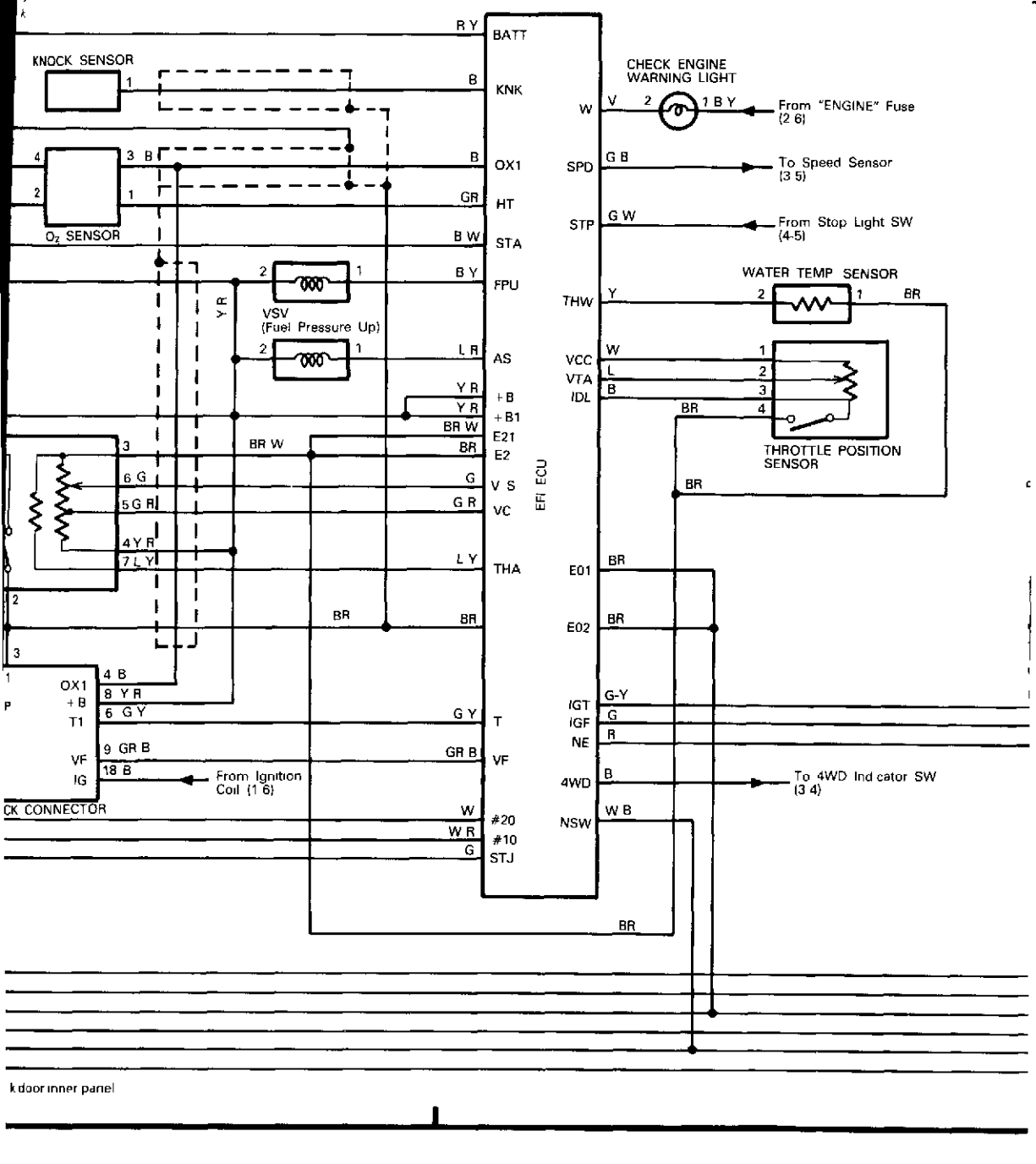

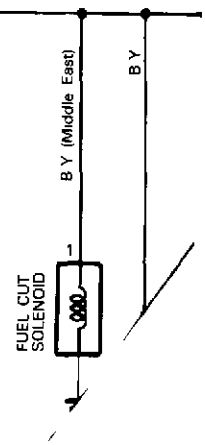

k door inner panel

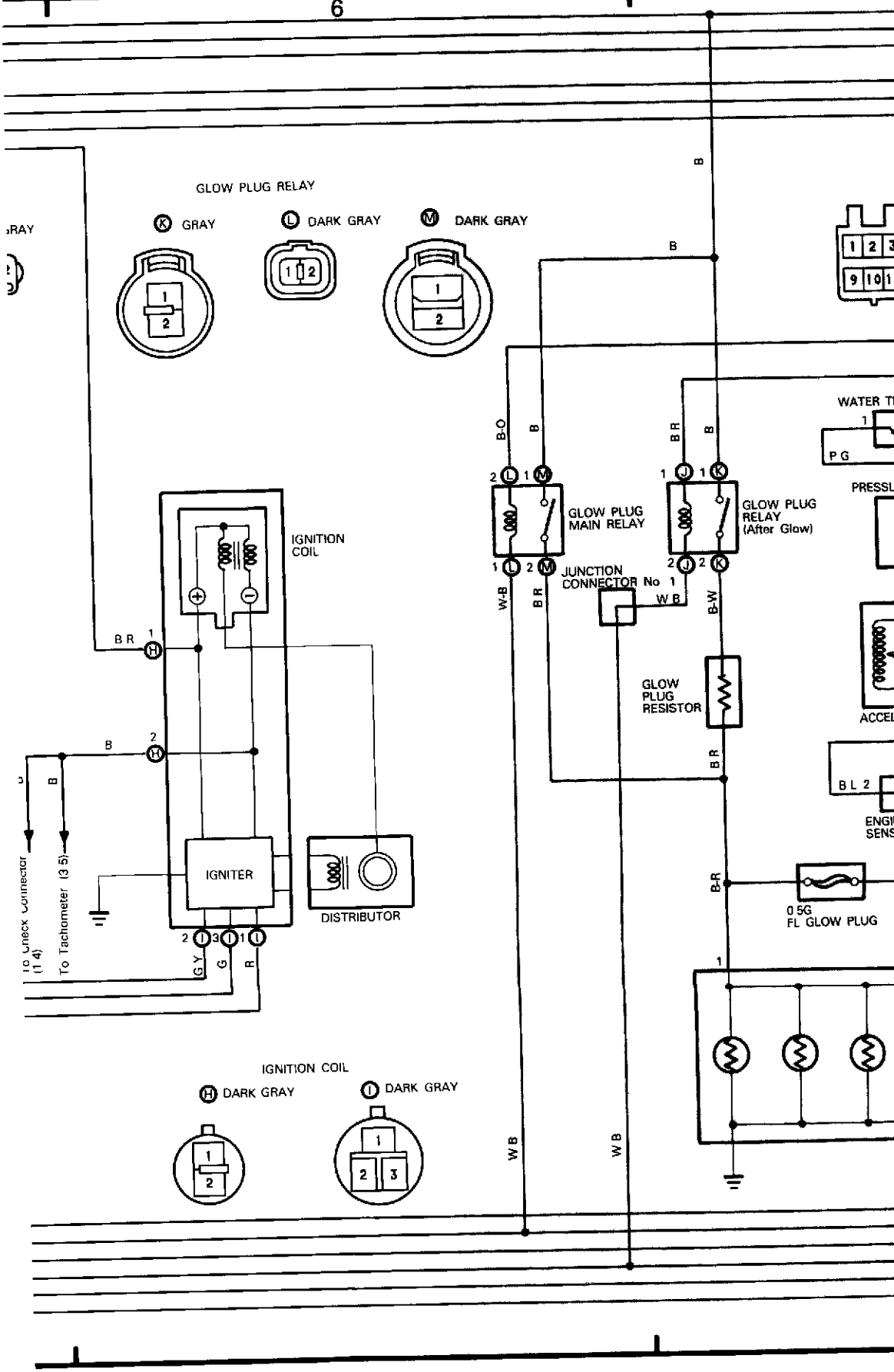
GLOW PLUG RELAY
K GRAY
L DARK GRAY
M DARK GRAY
GLOW PLUG MAIN RELAY
GLOW PLUG RELAY (After Glow)
JUNCTION CONNECTOR No 1
GLOW PLUG RESISTOR
0.5G
FL GLOW PLUG
IGNITION COIL
IGNITER
DISTRIBUTOR
To Tachometer (3-5)
IGNITION COIL
H DARK GRAY
I DARK GRAY
WATER T
PRESSU
ACCEL
ENGI
SENS

(2L-T Austria)

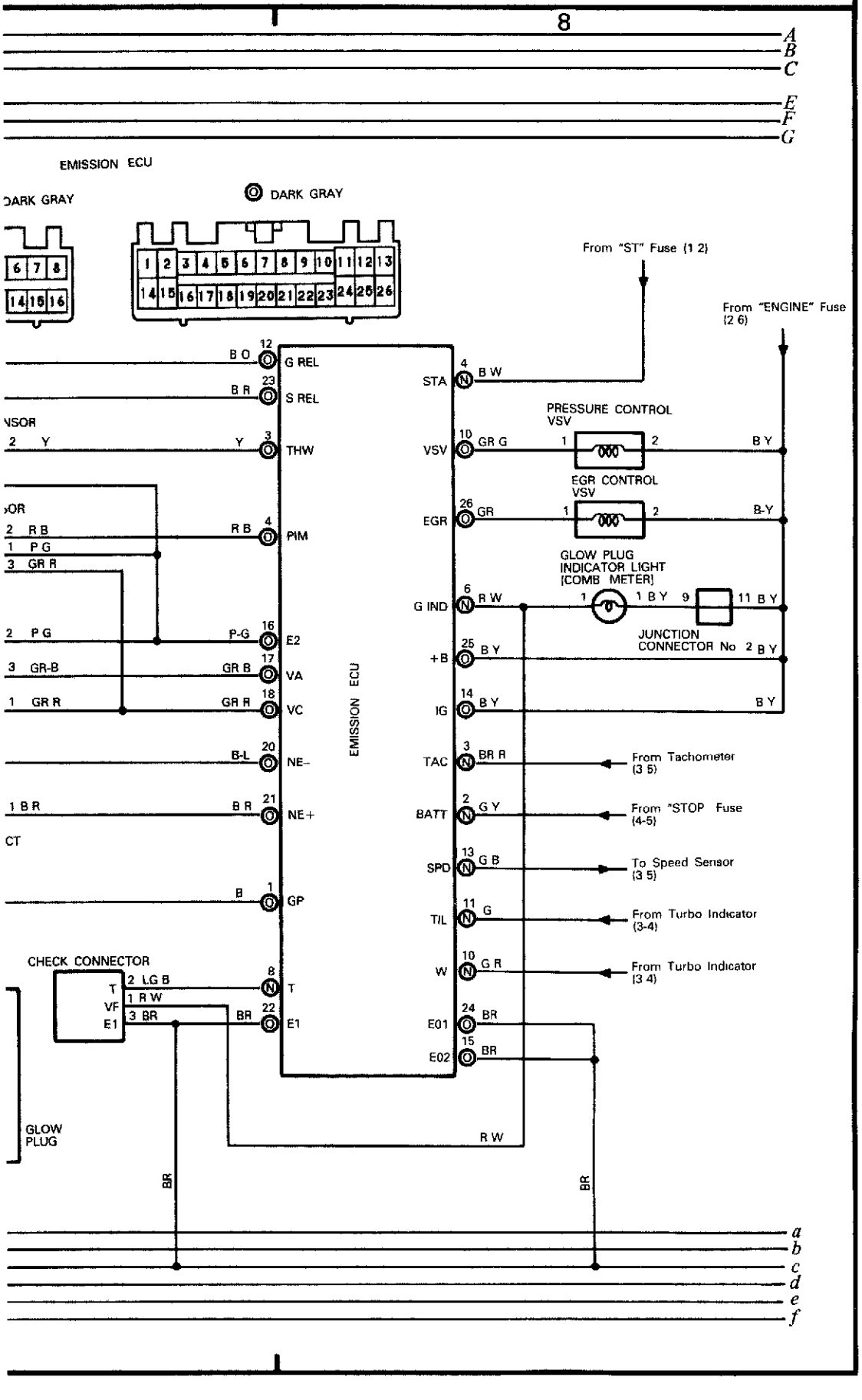
8
A
B
C
E
F
G
EMISSION ECU
DARK GRAY
DARK GRAY
From "ST" Fuse (1 2)
From "ENGINE" Fuse (2 6)
B O 12 G REL
B R 23 S REL
2 Y Y 3 THW
2 R B R B 4 PIM
1 P G
3 GR R
2 P G P-G 16 E2
3 GR-B GR B 17 VA
1 GR R GR R 18 VC
B-L 20 NE-
1 B R B R 21 NE+
B 1 GP
CHECK CONNECTOR
T 2 LG B 8 T
VF 1 R W
E1 3 BR BR 22 E1
GLOW PLUG
BR
BR
R W
EMISSION ECU
STA 4 B W
VSV 10 GR G
PRESSURE CONTROL VSV
B Y
EGR CONTROL VSV
EGR 26 GR
B-Y
GLOW PLUG INDICATOR LIGHT [COMB METER]
G IND 6 R W
1 B Y 9
11 B Y
JUNCTION CONNECTOR No 2
+B 25 B Y
B Y
IG 14 B Y
B Y
TAC 3 BR R
From Tachometer (3 5)
BATT 2 G Y
From "STOP Fuse (4-5)
SPD 13 G B
To Speed Sensor (3 5)
TIL 11 G
From Turbo Indicator (3-4)
W 10 G R
From Turbo Indicator (3 4)
E01 24 BR
E02 15 BR
a
b
c
d
e
f

2 LAND CRUISER 70 (Light-Duty) (Cont'd)

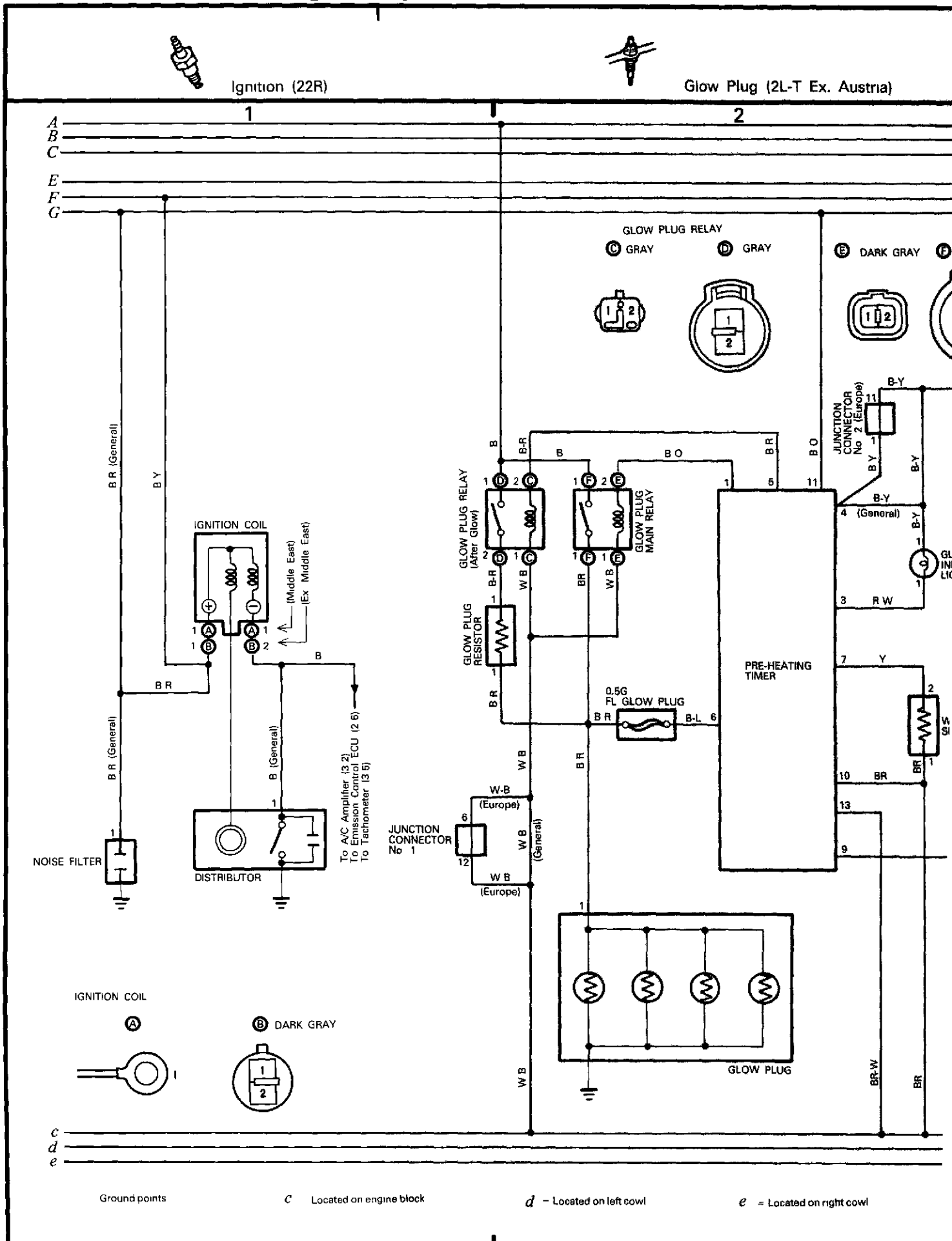

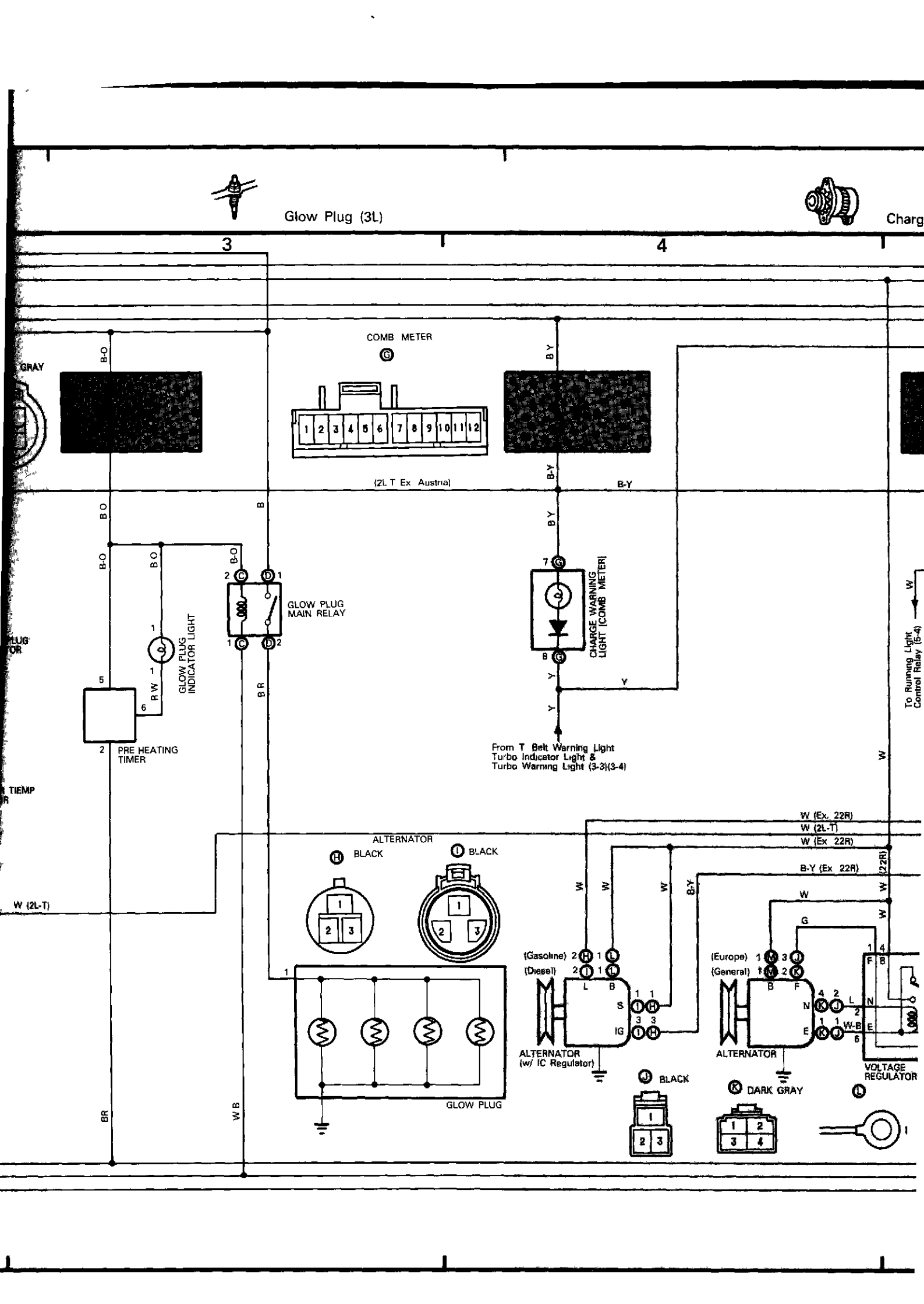

Glow Plug (3L)
Charg
3
4
COMB METER
(2L T Ex Austria)
GRAY
GLOW PLUG MAIN RELAY
GLOW PLUG INDICATOR LIGHT
PRE HEATING TIMER
CHARGE WARNING LIGHT (COMB METER)
From T Belt Warning Light
Turbo Indicator Light &
Turbo Warning Light (3-3)(3-4)
To Running Light Control Relay (5-4)
W (Ex. 22R)
W (2L-T)
W (Ex 22R)
B-Y (Ex 22R)
ALTERNATOR
BLACK
BLACK
W (2L-T)
(Gasoline)
(Diesel)
ALTERNATOR (w/ IC Regulator)
(Europe)
(General)
ALTERNATOR
VOLTAGE REGULATOR
BLACK
DARK GRAY
GLOW PLUG

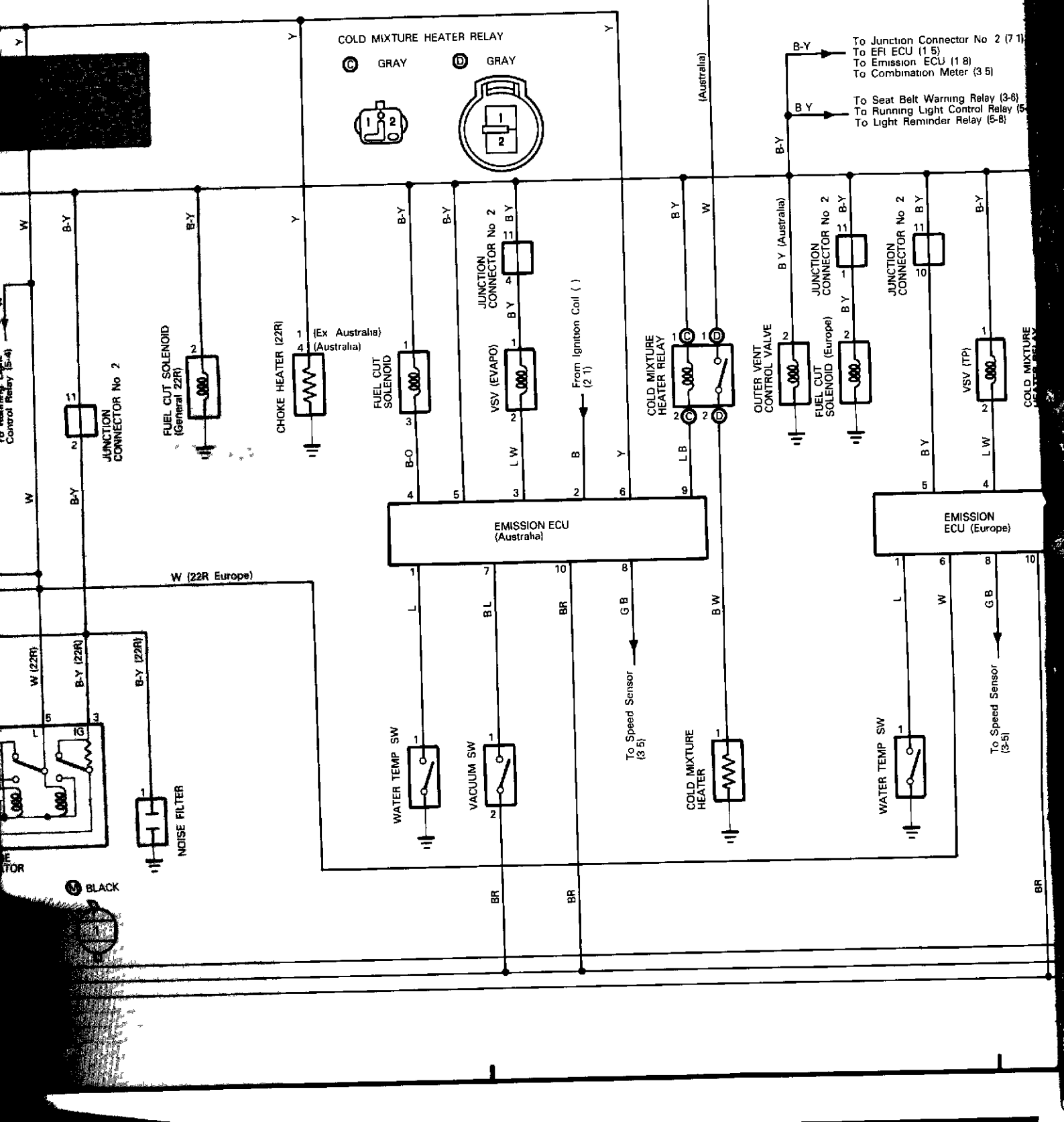
COLD MIXTURE HEATER RELAY
C GRAY
D GRAY
To Junction Connector No 2 (7 1)
To EFI ECU (1 5)
To Emission ECU (1 8)
To Combination Meter (3 5)
To Seat Belt Warning Relay (3-6)
To Running Light Control Relay (5-
To Light Reminder Relay (5-8)
(Australia)
JUNCTION CONNECTOR No 2
FUEL CUT SOLENOID (General 22R)
CHOKE HEATER (22R)
(Ex Australia)
(Australia)
FUEL CUT SOLENOID
JUNCTION CONNECTOR No 2
VSV (EVAPO)
From Ignition Coil ( )
COLD MIXTURE HEATER RELAY
OUTER VENT CONTROL VALVE
FUEL CUT SOLENOID (Europe)
JUNCTION CONNECTOR No 2
JUNCTION CONNECTOR No 2
VSV (TP)
EMISSION ECU (Australia)
EMISSION ECU (Europe)
W (22R Europe)
W (22R)
B-Y (22R)
B-Y (22R)
NOISE FILTER
WATER TEMP SW
VACUUM SW
To Speed Sensor (3 5)
COLD MIXTURE HEATER
WATER TEMP SW
To Speed Sensor (3-5)
BLACK

ssion Control (22R)

Remote Control Mirror (General)

7 8

B
C
E
F

(Europe)

From "IG" Fuse (4 8)

GR

REMOTE CONTROL MIRROR SW

		B	E	HL	VL	C	VR	HR
RH	UP							
	DOWN							
	RIGHT							
	LEFT							
LH	UP							
	DOWN							
	RIGHT							
	LEFT							

B Y
B Y
W
B-Y (Middle East)
B Y
B Y

VSV (TP)
COLD MIXTURE HEATER RELAY
FUEL CUT SOLENOID
VSV (TP)

L W
L-B
L W

EMISSION ECU (Middle East)

G B
B-W
G B

To Speed Sensor (3 5)
To Speed Sensor (3 5)

COLD MIXTURE HEATER

BR
BR
BR

BR
V G
V
R-B
V-R
V W

R-G
R W
R W
R G

(Wire to Wire Connector)
(Wire to Wire Connector)

R-B
R B
R B

LH
RH

MIRROR MOTORS

c
d
e

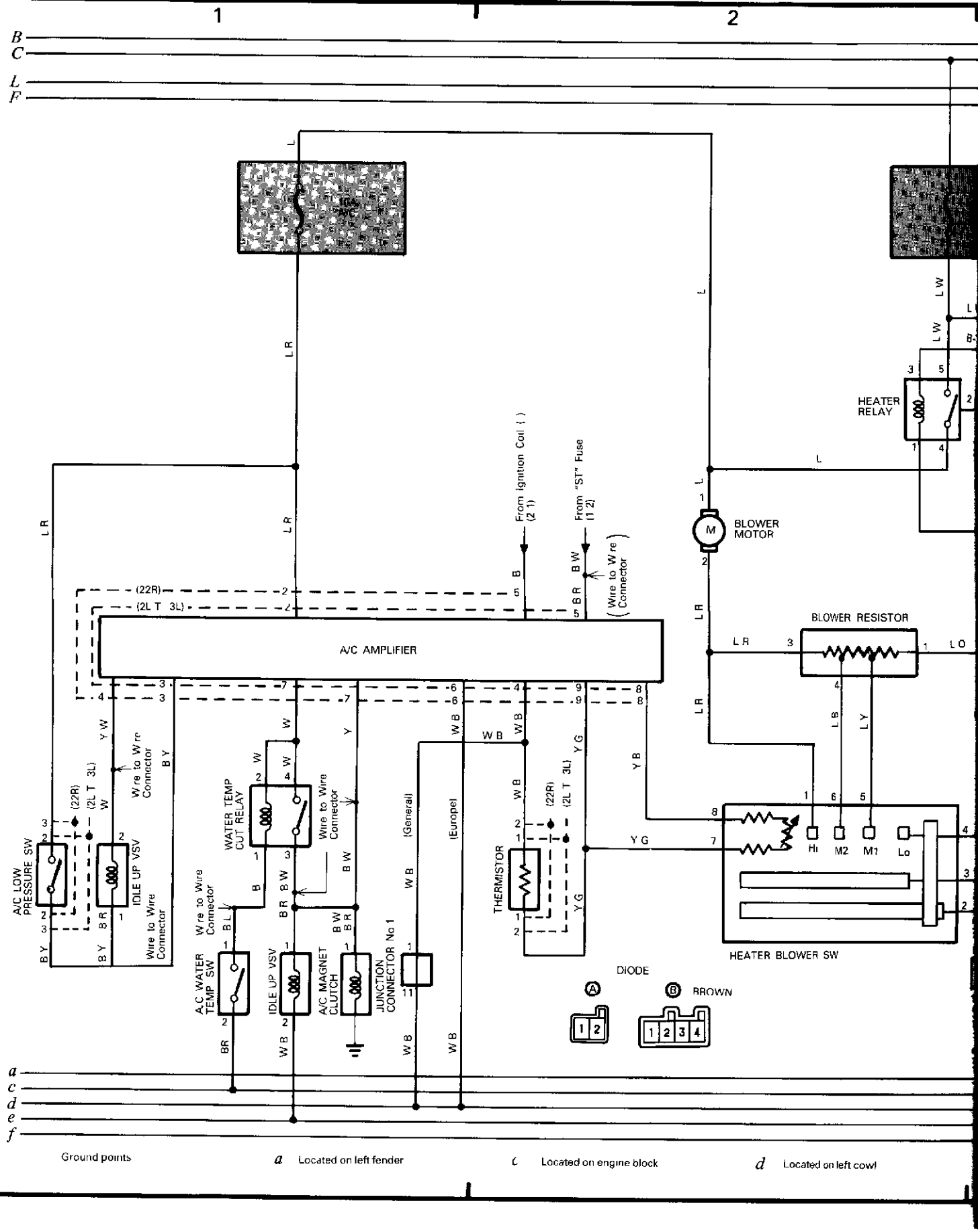

Ground points

a Located on left fender

c Located on engine block

d Located on left cowl

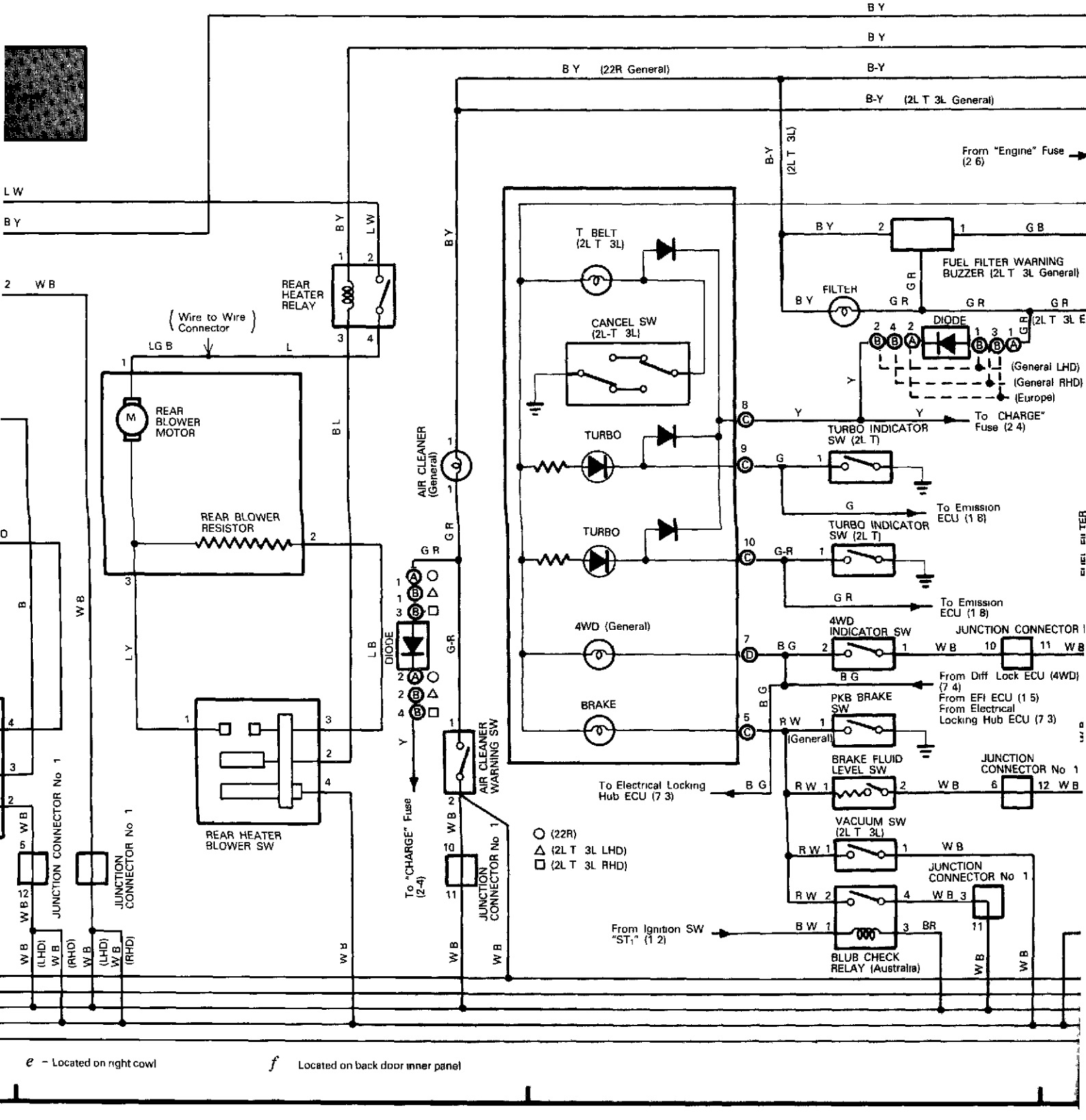

e – Located on right cowl

f Located on back door inner panel

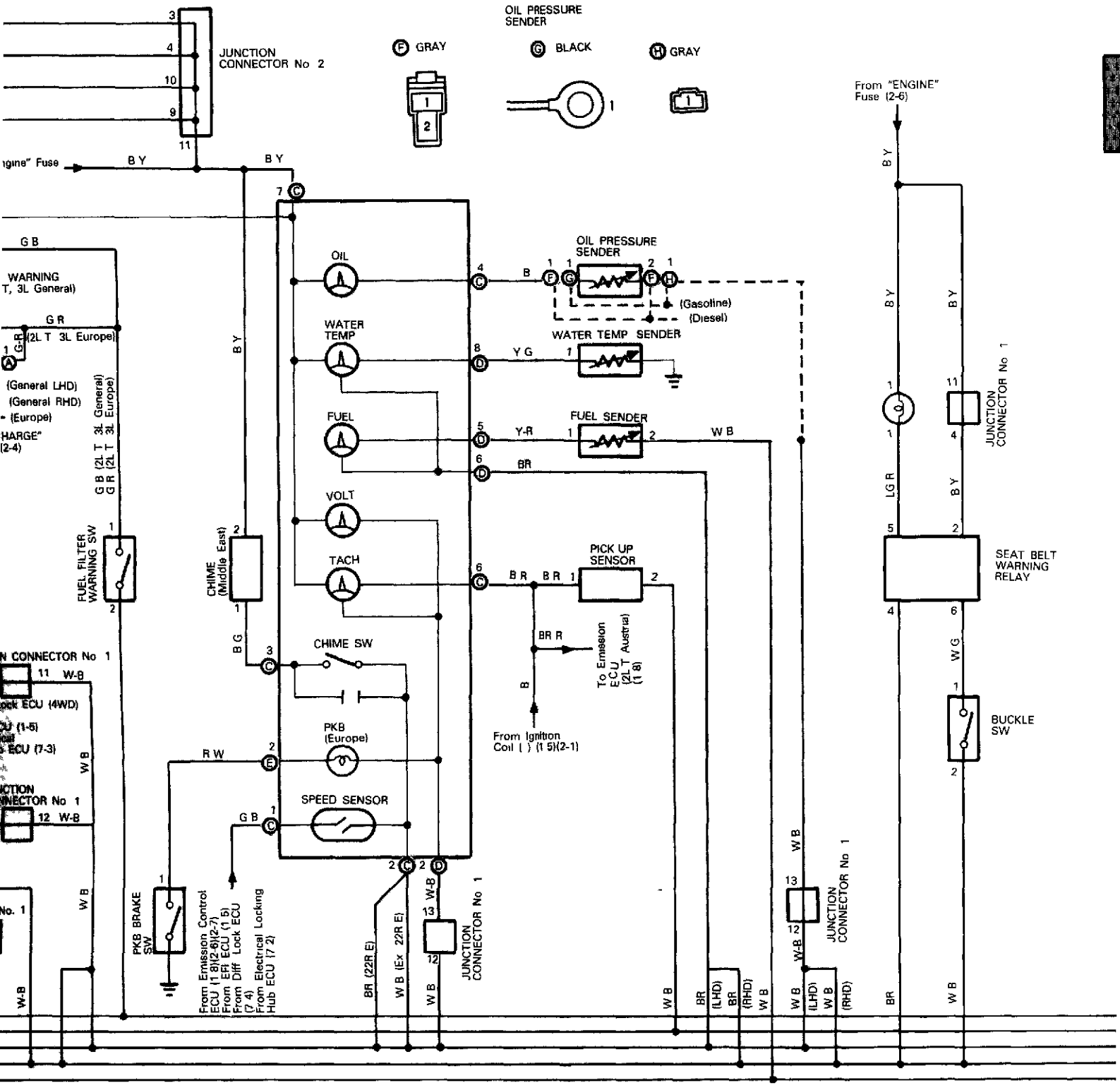
JUNCTION CONNECTOR No 2
OIL PRESSURE SENDER
GRAY
BLACK
GRAY
From "ENGINE" Fuse (2-6)
OIL
WATER TEMP
FUEL
VOLT
TACH
CHIME SW
PKB (Europe)
SPEED SENSOR
OIL PRESSURE SENDER
(Gasoline)
(Diesel)
WATER TEMP SENDER
FUEL SENDER
PICK UP SENSOR
To Emission ECU (2L T Austria) (1 8)
From Ignition Coil ( ) (1 5)(2-1)
FUEL FILTER WARNING SW
CHIME (Middle East)
PKB BRAKE SW
From Emission Control ECU (1 8)(2-6)(2-7)
From EFI ECU (1 5)
From Diff Lock ECU (7 4)
From Electrical Locking Hub ECU (7 2)
JUNCTION CONNECTOR No 1
JUNCTION CONNECTOR No 1
JUNCTION CONNECTOR No 1
SEAT BELT WARNING RELAY
BUCKLE SW
(LHD)
(RHD)
(LHD)
(RHD)

Fuel Heater
(2L-T Europe)

Accessory Meter

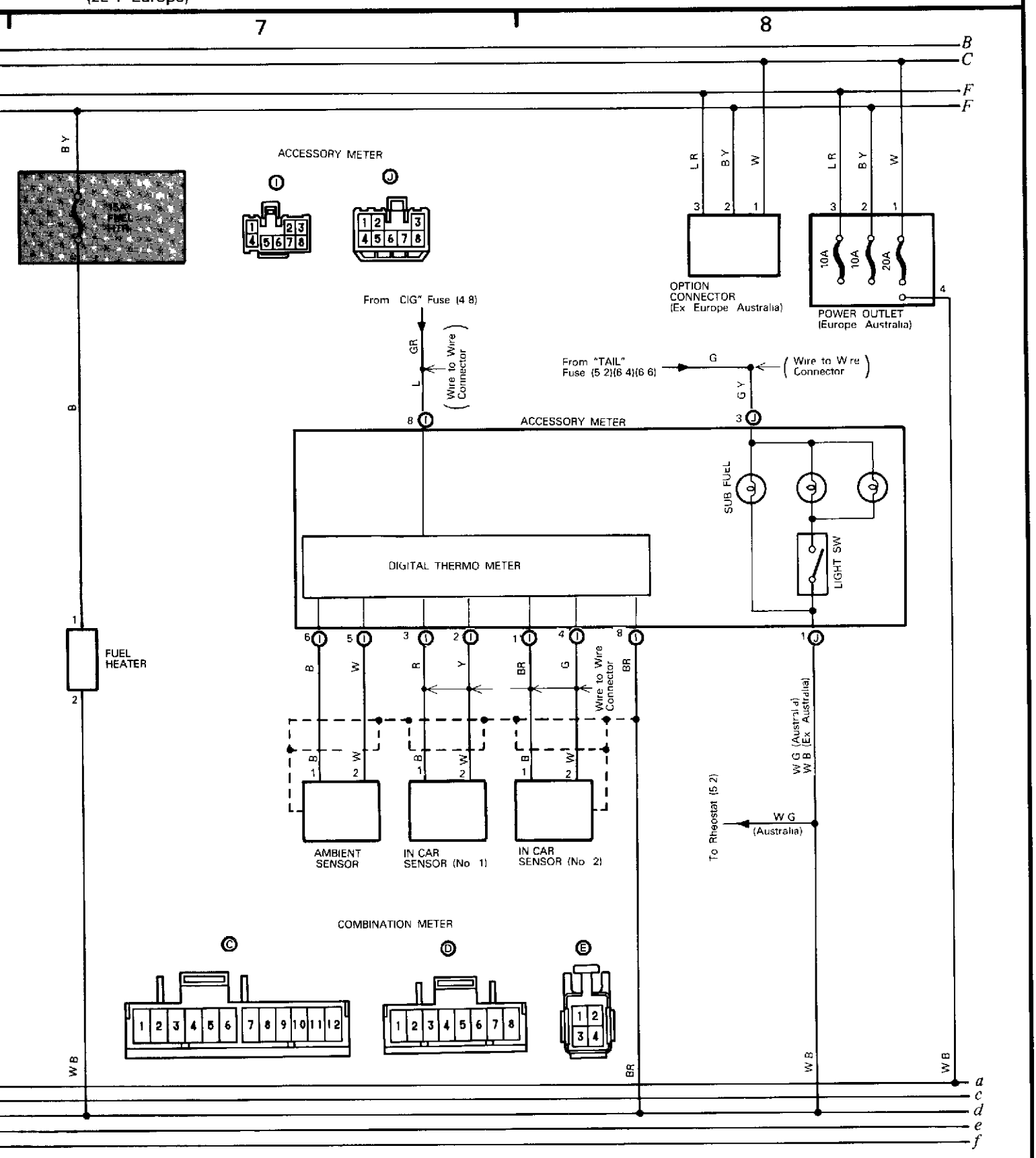

4 LAND CRUISER 70 (Light-Duty) (Cont'd)

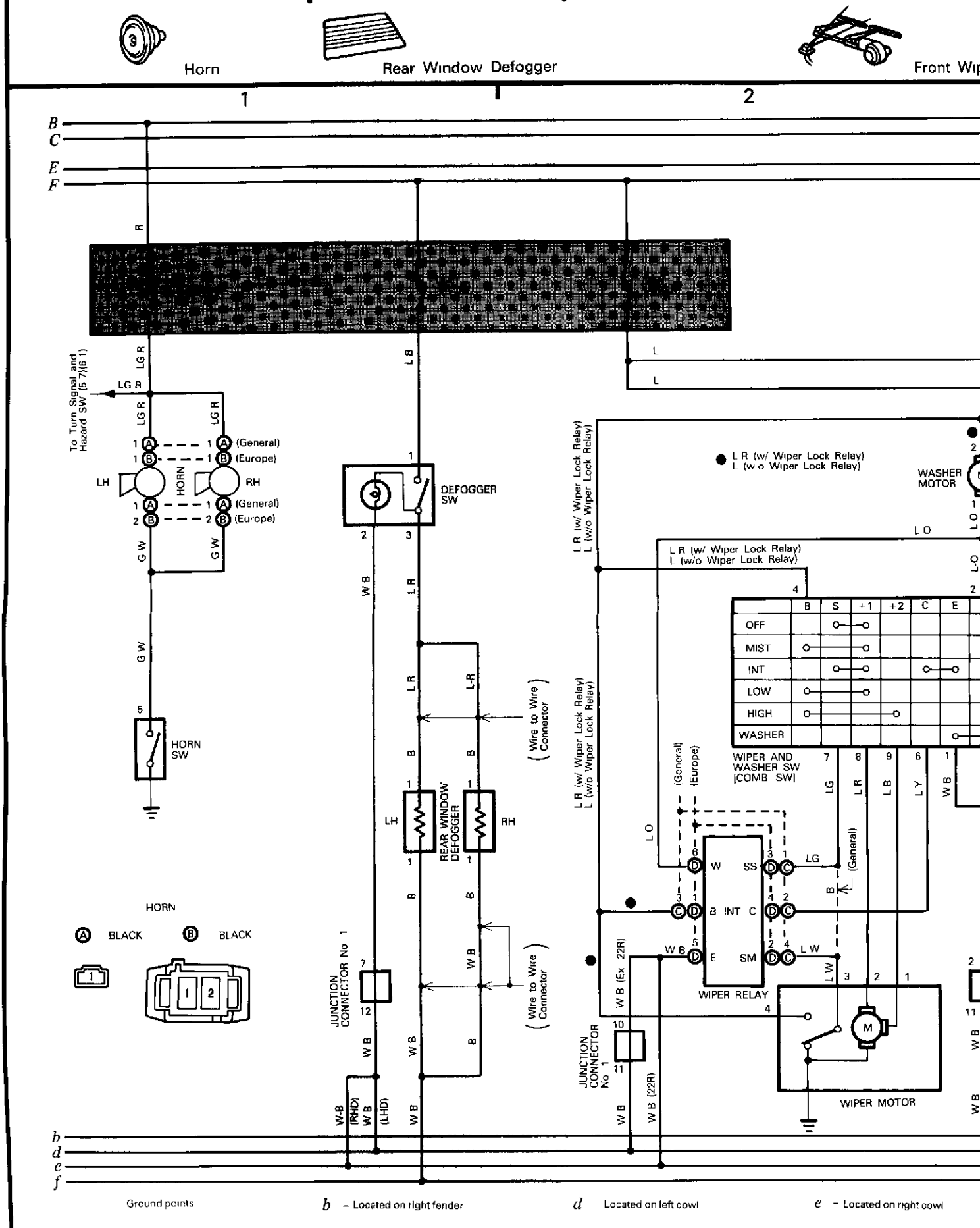

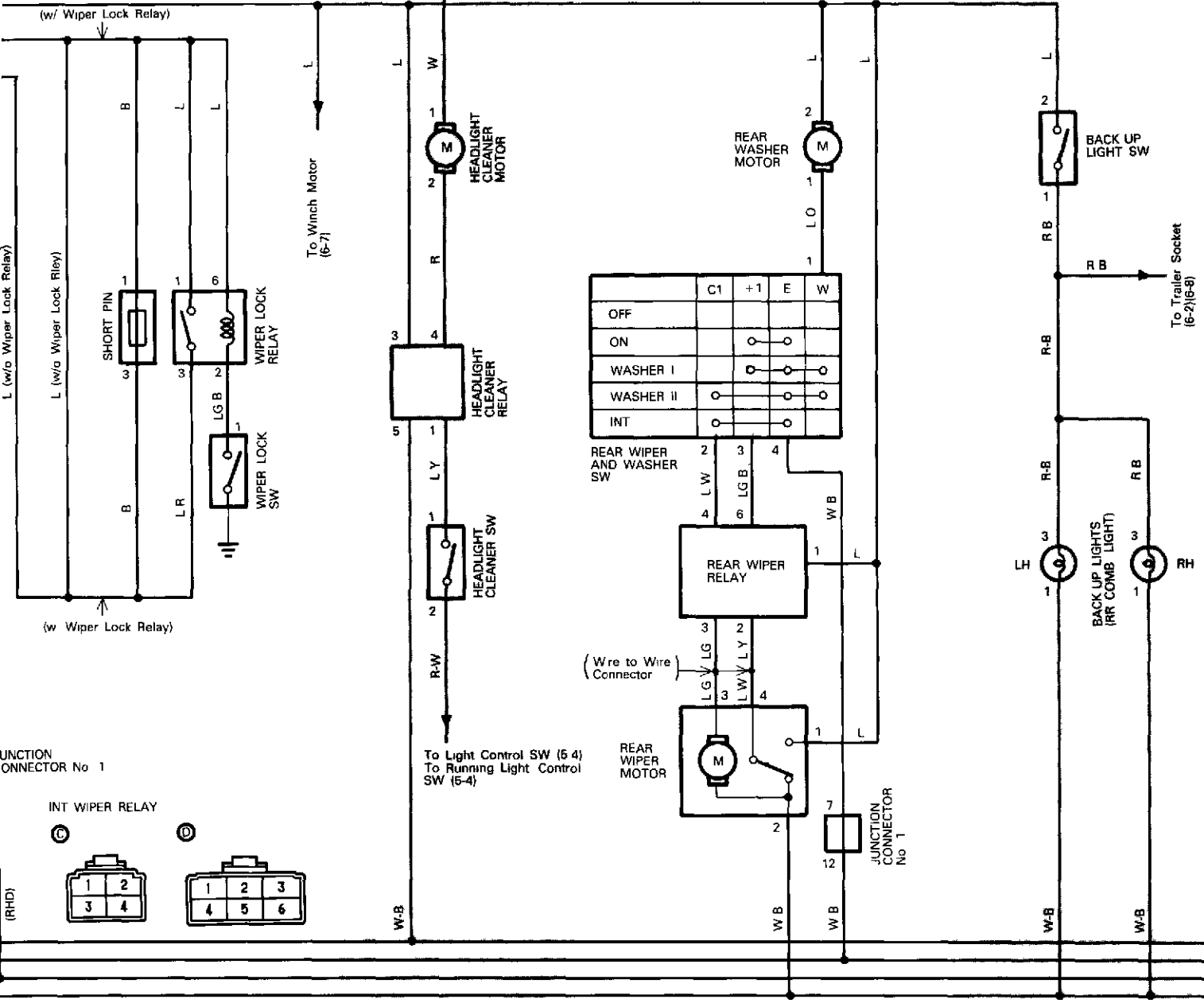

f – Located on back door inner panel

Stop Light

5

Interior Light

6

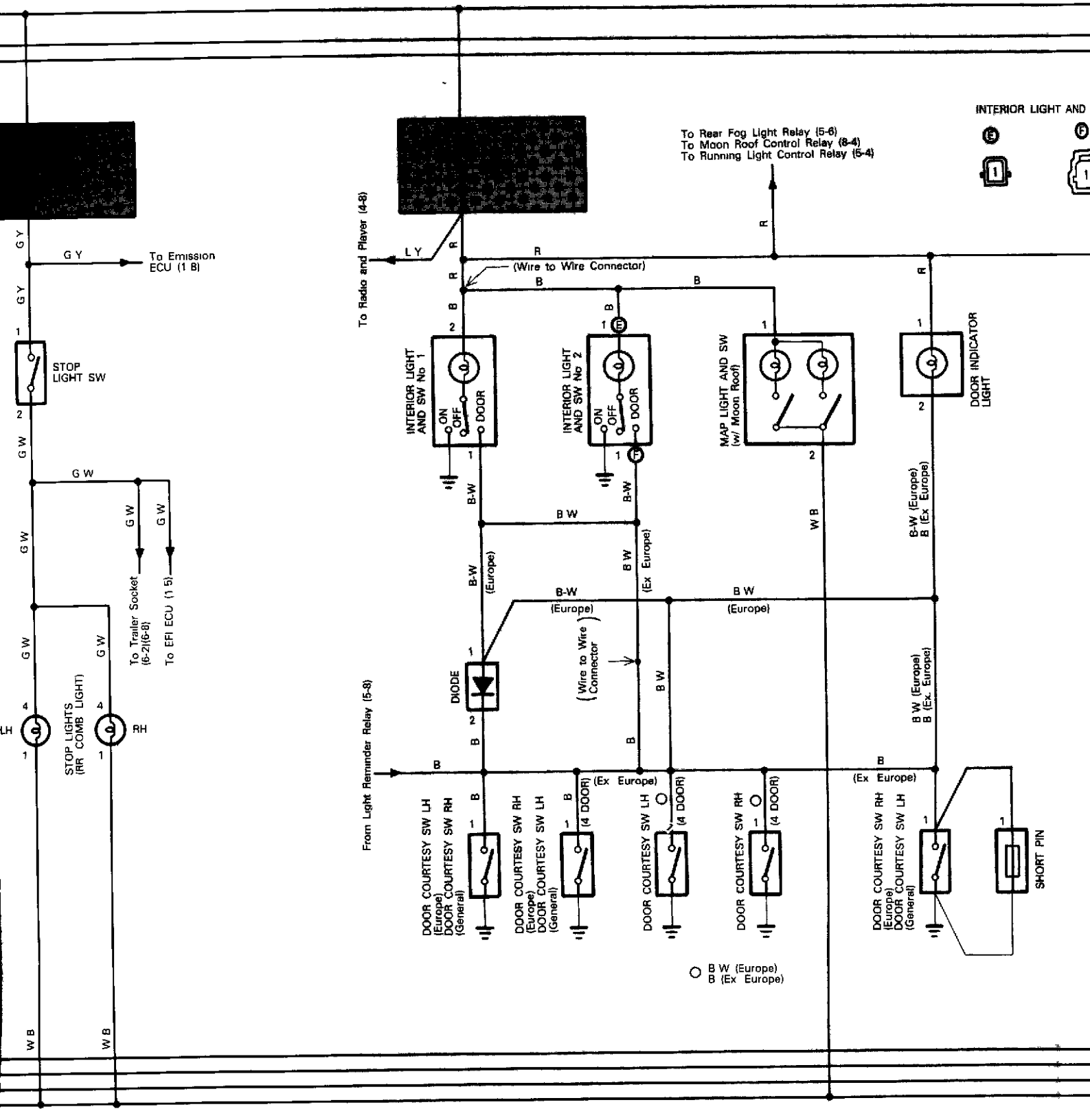

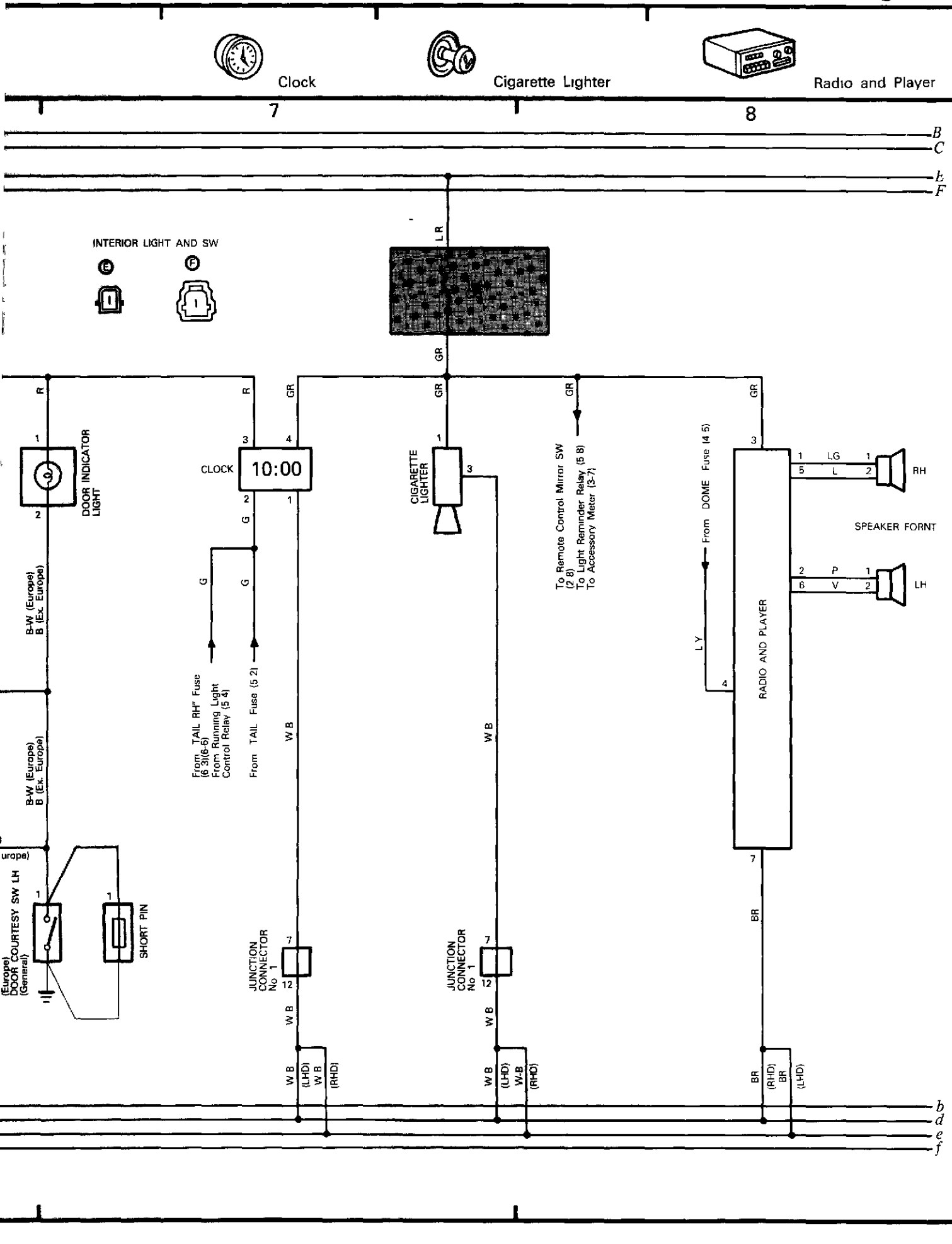
Clock
Cigarette Lighter
Radio and Player
7
8
B
C
E
F
INTERIOR LIGHT AND SW
E
F
LR
GR
R
DOOR INDICATOR LIGHT
CLOCK
10:00
CIGARETTE LIGHTER
To Remote Control Mirror SW (2 8)
To Light Reminder Relay (5 8)
To Accessory Meter (3-7)
From DOME Fuse (4 5)
RADIO AND PLAYER
SPEAKER FORNT
RH
LH
LG
P
V
B-W (Europe)
B (Ex. Europe)
From "TAIL RH" Fuse (6 3)(6-6)
From Running Light Control Relay (5 4)
From TAIL Fuse (5 2)
G
W B
LY
BR
SHORT PIN
DOOR COURTESY SW LH (General)
(Europe)
JUNCTION CONNECTOR No 1
(LHD)
(RHD)
b
d
e
f

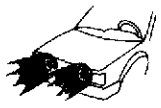

Fog Light
(General
Ex Australia)

Taillight and Illumination (General)

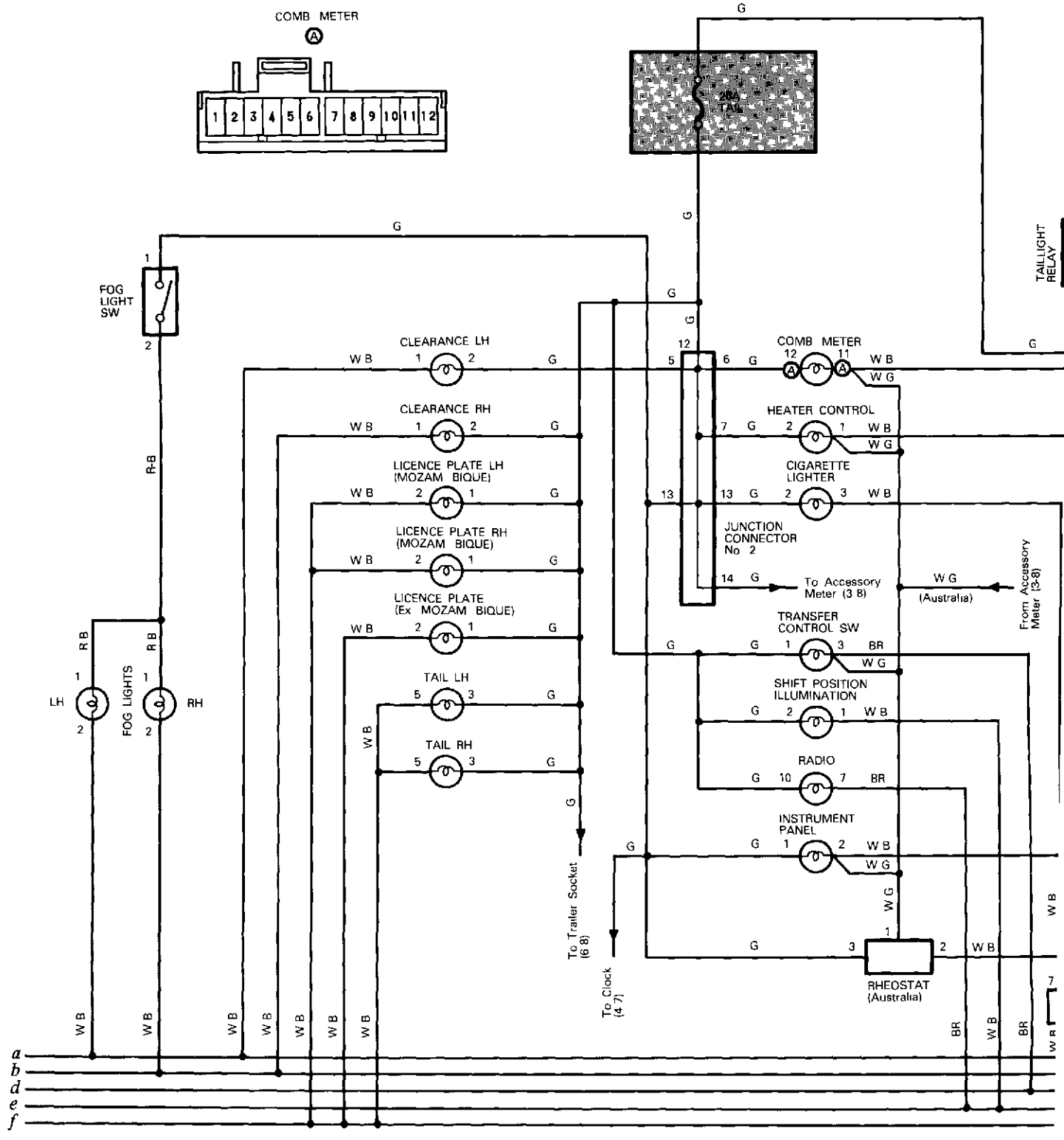

Ground points

a Located on left fender

b – Located on right fender

d Located on left cowl

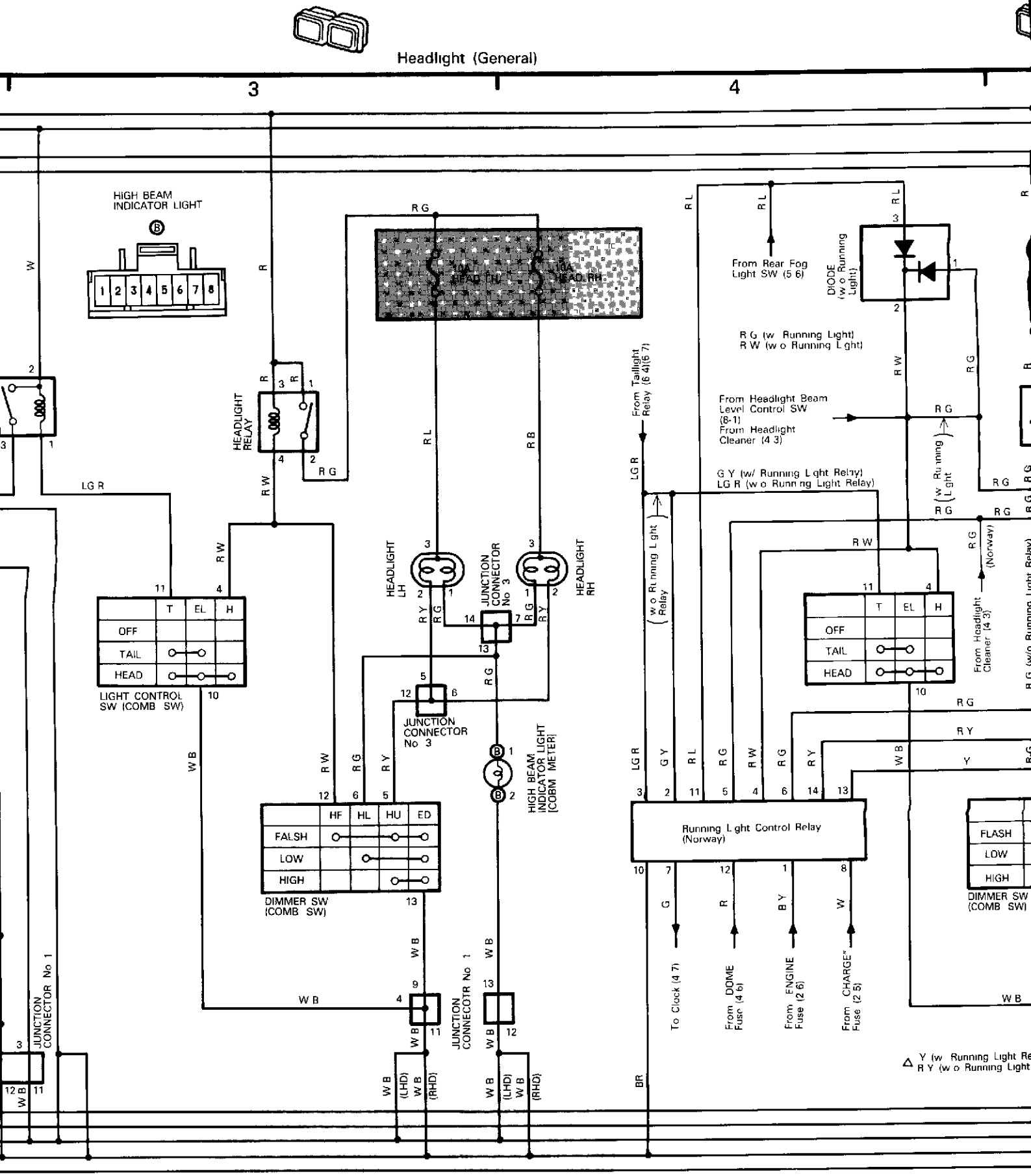

e – Located on right cowl

f – Located on back door inner panel

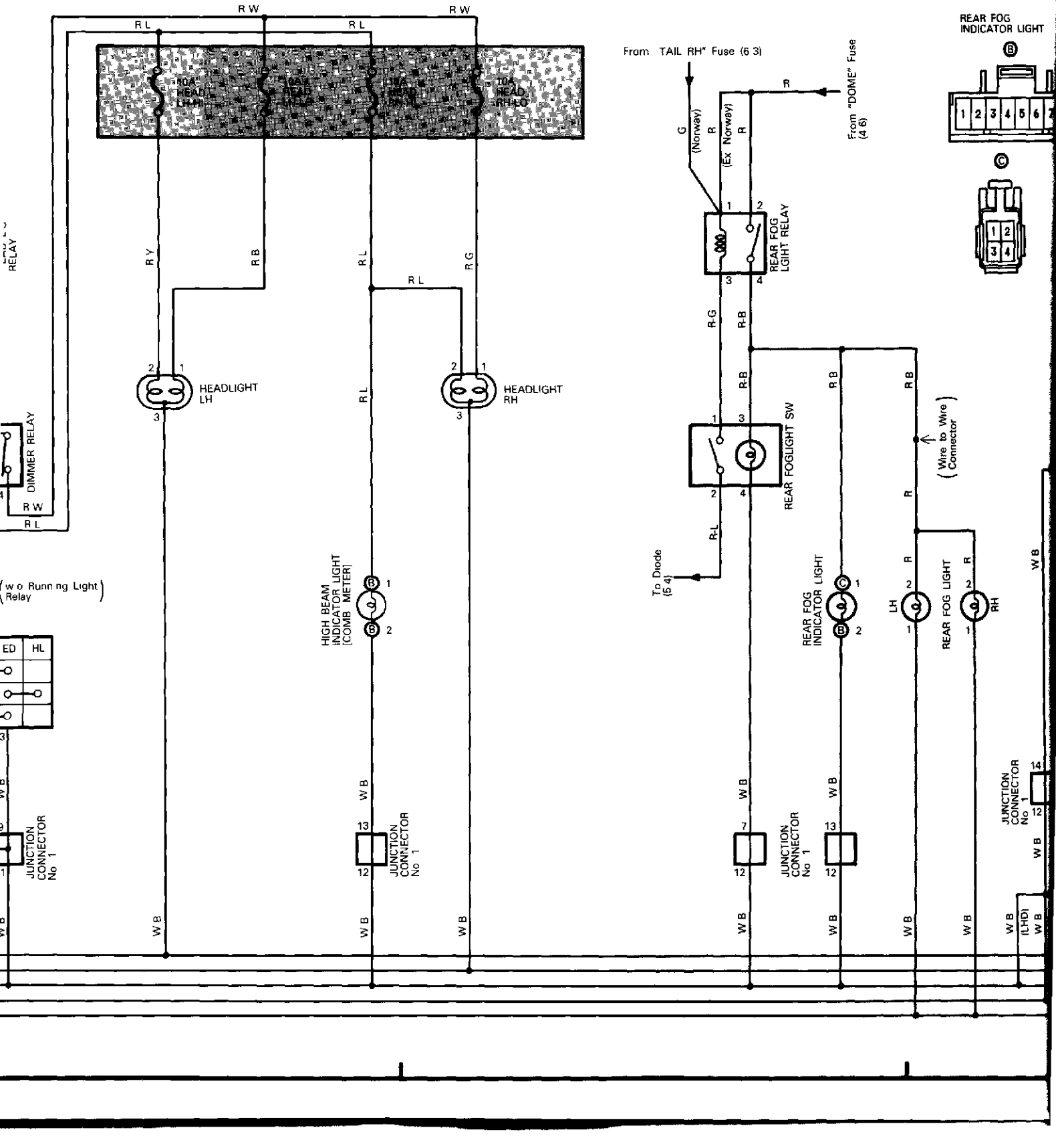
R W
R L
R W
R L
10A HEAD LH-HI
10A HEAD LH-LO
10A HEAD RH-HI
10A HEAD RH-LO
From "TAIL RH" Fuse (6 3)
From "DOME" Fuse (4 6)
REAR FOG INDICATOR LIGHT
G (Norway)
R (Ex Norway)
REAR FOG LGIHT RELAY
R-G
R-B
REAR FOGLIGHT SW
(Wire to Wire Connector)
To Diode (5 4)
R-L
R Y
R B
R L
R G
HEADLIGHT LH
HEADLIGHT RH
DIMMER RELAY
(w o Running Light Relay)
HIGH BEAM INDICATOR LIGHT (COMB METER)
REAR FOG INDICATOR LIGHT
REAR FOG LIGHT
LH
RH
JUNCTION CONNECTOR No 1
W B
(LHD)

Turn Signal and Hazard (General)

Light Reminder (Europe)

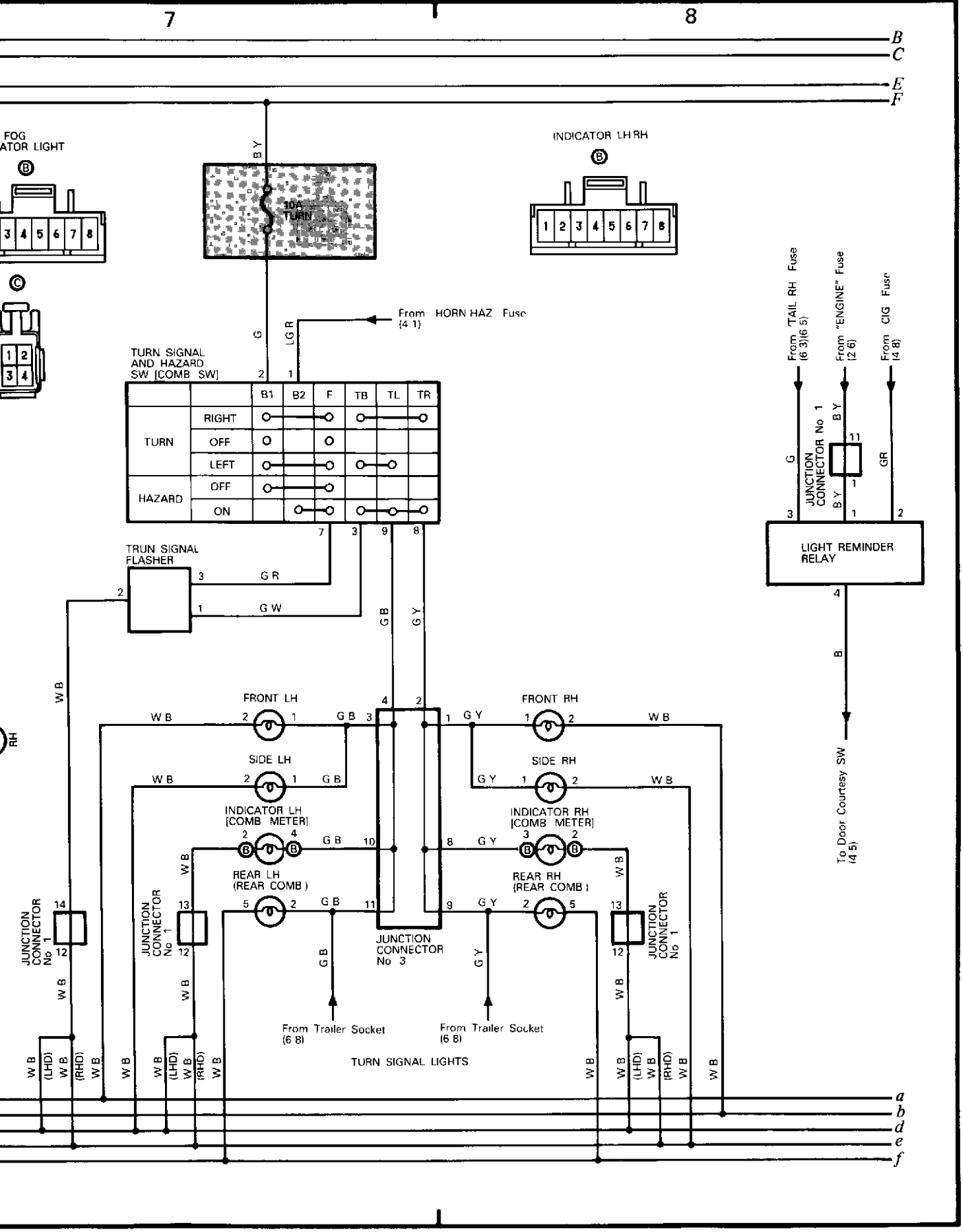

6 LAND CRUISER 70 (Light-Duty) (Cont'd)

Turn Signal and Hazard (Europe)

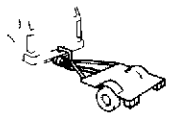

Traile
(Euro

1 2

C

F

B Y

REAR LH RH
(REAR COMB)

Ⓐ 1 2 3 4 5 6 Ⓑ 1 2 3 4

G LG R From HORN HAZ Fuse (4 1)

INDICATOR LH RH
(COMB METER)

Ⓒ 1 2 3 4 5 6 7 8

From Back Up Light SW (4-4)

From Stop Light SW (4-5)

R B G W G-O

6 Ⓔ 4 Ⓔ 1

TRAILER SO

1 Ⓓ 2 Ⓓ

TURN SIGNAL
AND HAZARD
SW (COMB SW)

2 1

		B1	B2	F	TB	TL	TR
TURN	RIGHT	○		○	○		
	OFF	○		○			
	LEFT	○		○	○		
HAZARD	OFF	○		○			
	ON		○		○	○	

7 3 9 8

TURN SIGNAL
FLASHER

3 2 G R 1 G W

G Y

1 3

HAZARD RED
INDICATOR
LIGHT RELAY

2 4

W B G B G Y

○ (Ex Ireland)
△ (Ireland)

G-B

G R

INDICATOR LH
(COMB METER)

2 4

INDICATOR RH
(COMB METER)

3 2

W B G B G Y W B

FRONT LH

W B 2 1 G B

FRONT RH

G Y 1 2 W B

SIDE LH

W B 2 1 G B

SIDE RH

G Y 1 2 W B

REAR LH
(REAR COMB)

W B 5 1 2 2 G B

REAR RH
(REAR COMB)

G Y 2 2 1 5 W B

(Ireland)
(Ex Ireland)

HAZARD RED
INDICATOR LIGHT

1 G R 1 G R

1 1

W B

JUNCTION
CONNECTOR No 1

14 12

JUNCTION
CONNECTOR No 1

13 12

JUNCTION
CONNECTOR No 1

13 12

JUNCTION
CONNECTOR No 1

1 11

G Y

G B

W B W B W B W B W B W B W B W B BR W B

a
b
d
e
f

Ground points

a Located on left fender

b Located on right fender

d Located on left cowl

iler Socket
rope)

(Europe LHD)

3

4

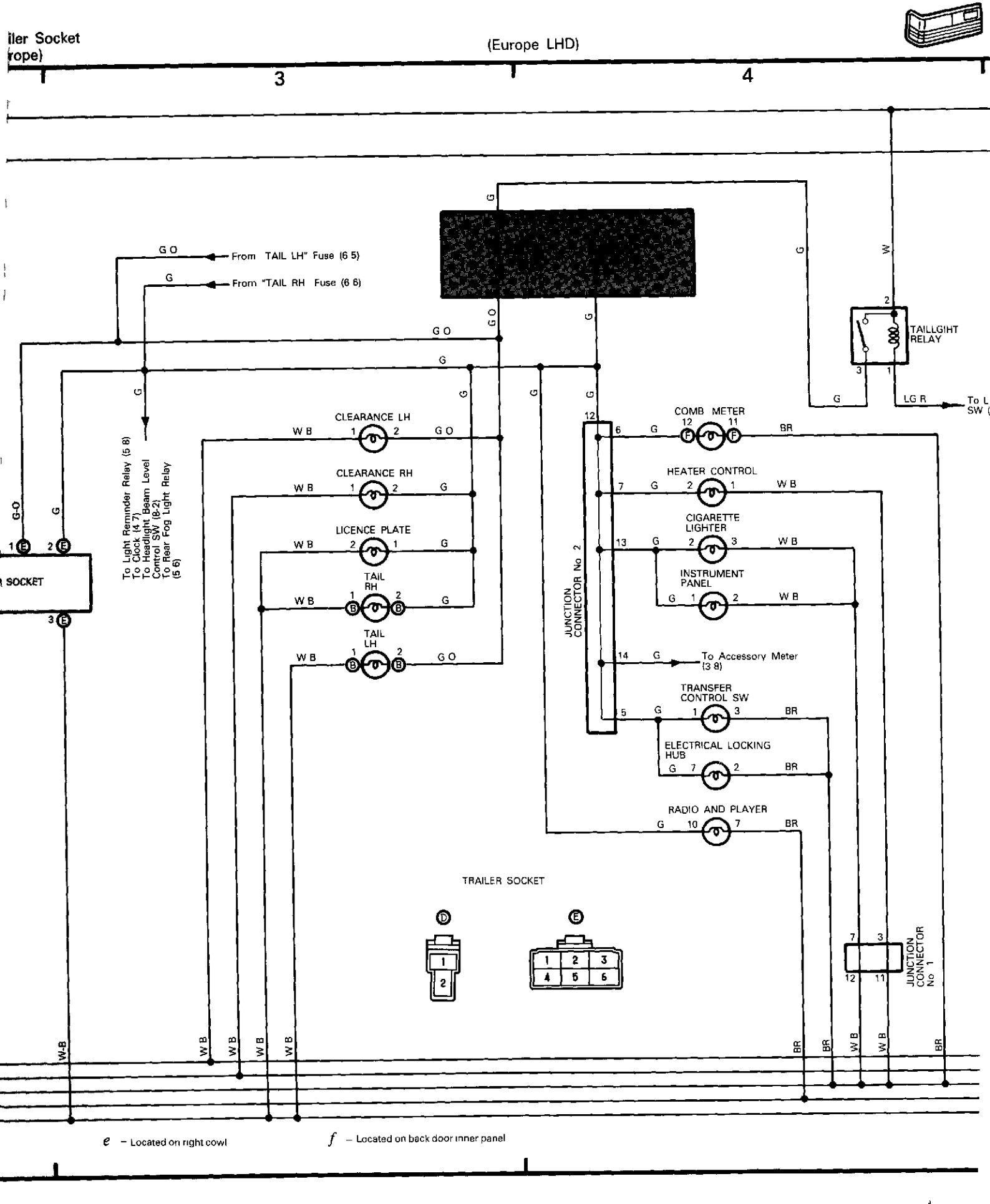

e – Located on right cowl

f – Located on back door inner panel

Taillight And Illumination (Europe RHD)

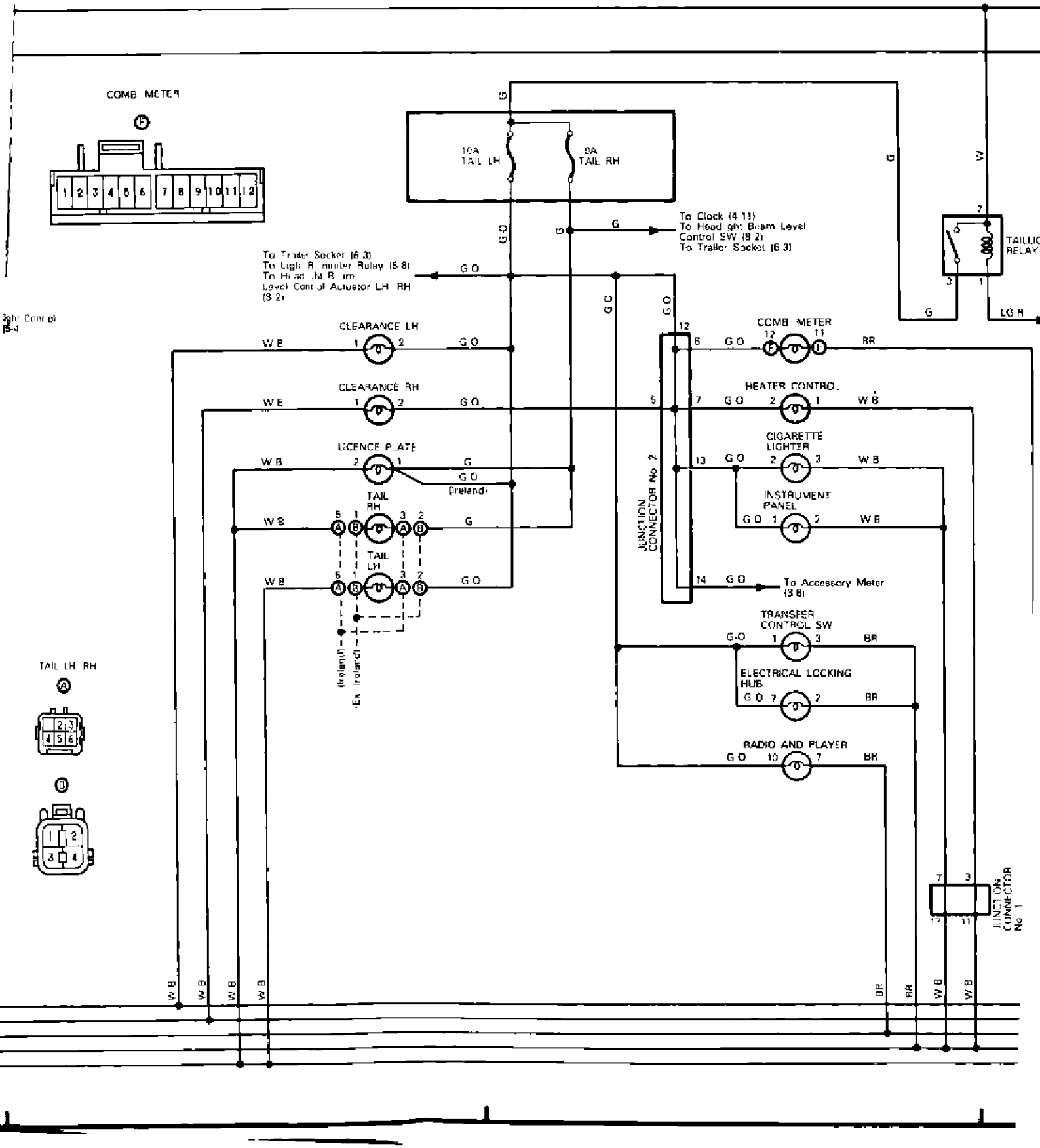

Winch

7

Trailer Socket (General)

8

C

F

From "WIPER" Fuse (4-3)

L

1

WINCH MOTOR

M

2

G

T

MAGNET SW

2

W-B

From "TAIL" Fuse (5-2)

From Back Up Light SW (4-4)

From Stop Light SW (4-5)

G

R-B

G-W

1 G 3 G 7 G

TRAILER SOCKET

1 D 2 D

G-Y

G-B

To Turn Signal Light Rear RH (5-8)

To Turn Signal Light Rear LH (5-7)

TRAILER SOCKET

D G

1 2

1 2 3

a

b

d

e

f

LAND CRUISER 70 (Light-Duty) (Cont'd)

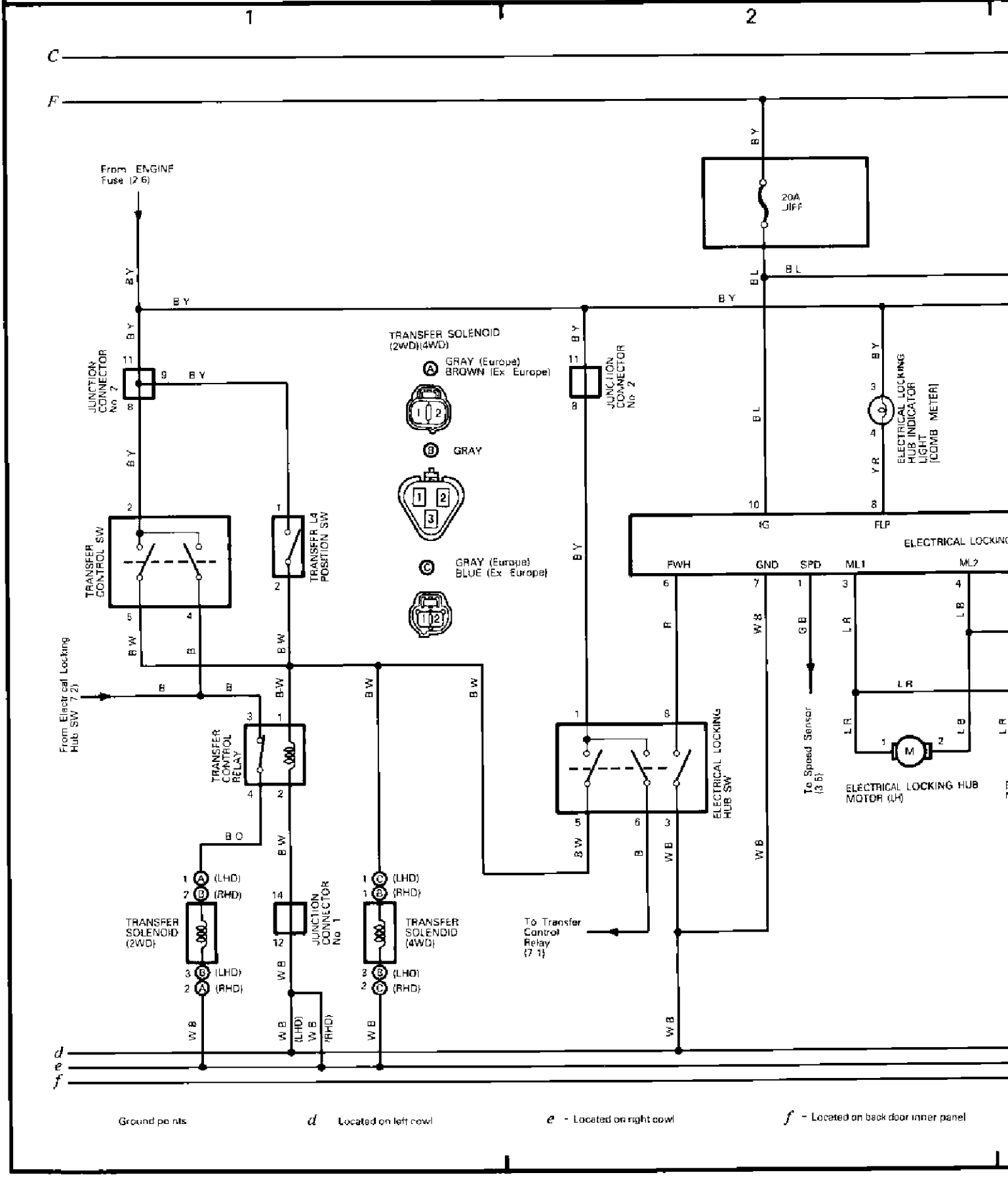

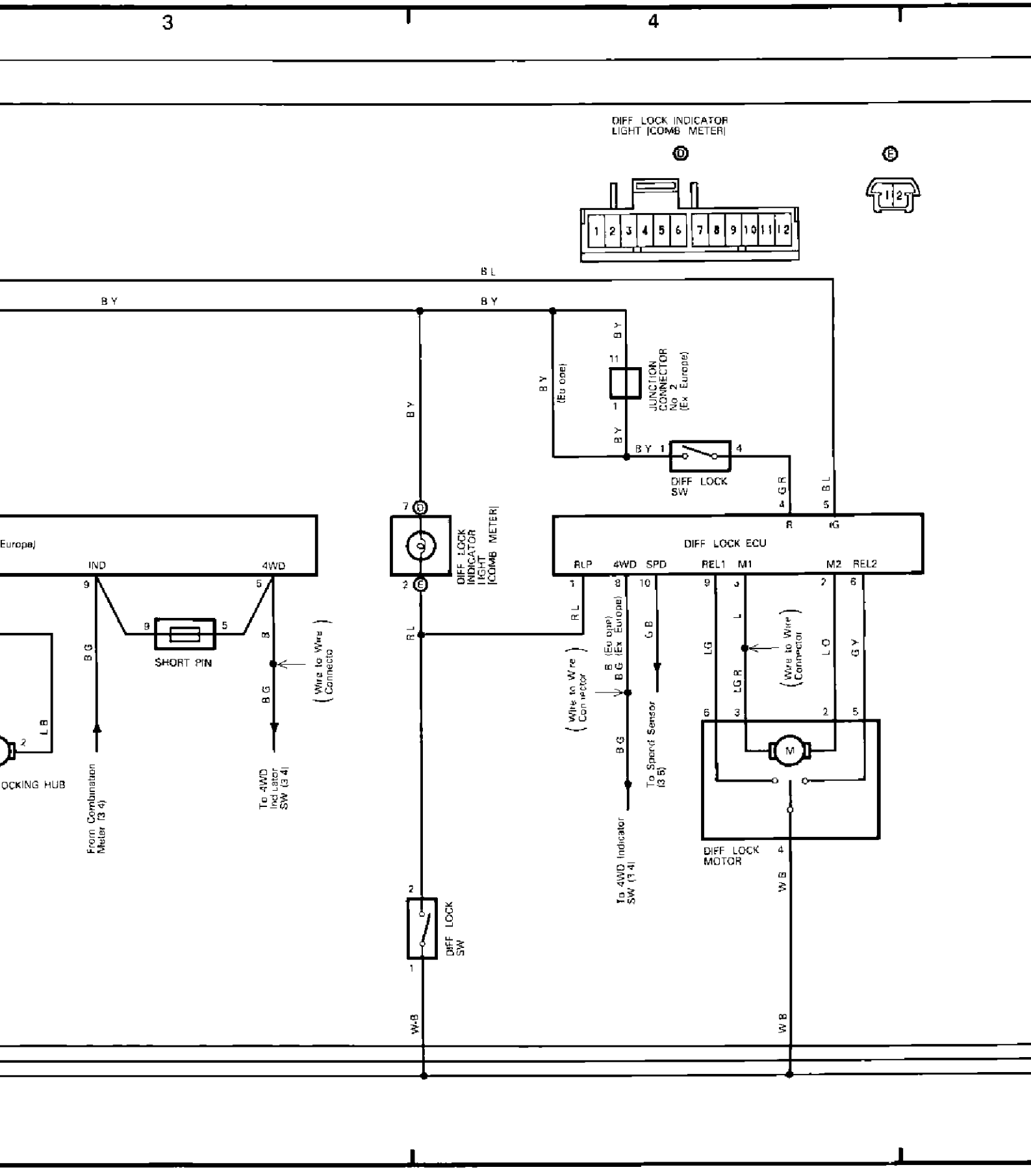
3
4
DIFF LOCK INDICATOR LIGHT (COMB METER)
JUNCTION CONNECTOR No 2 (Ex Europe)
DIFF LOCK SW
DIFF LOCK INDICATOR LIGHT (COMB METER)
DIFF LOCK ECU
RLP
4WD
SPD
REL1
M1
M2
REL2
Europe)
IND
4WD
SHORT PIN
(Wire to Wire Connector)
OCKING HUB
From Combination Meter (3 4)
To 4WD Ind Lator SW (3 4)
To Speed Sensor (3 5)
To 4WD Indicator SW (3 4)
DIFF LOCK MOTOR
DIFF LOCK SW
W-B
W B

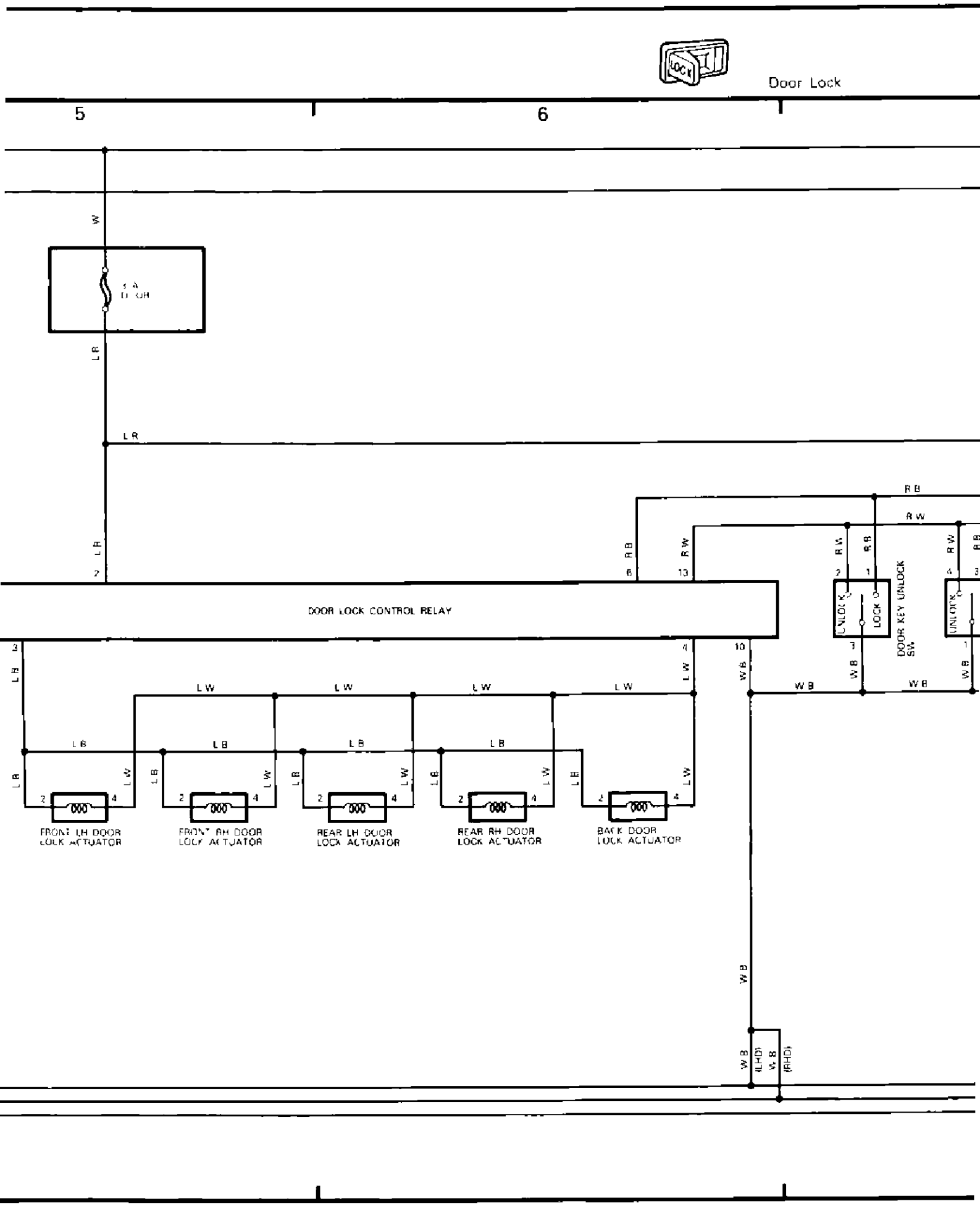
Door Lock
5
6
W
L R
R B
R W
DOOR LOCK CONTROL RELAY
UNLOCK
LOCK
DOOR KEY UNLOCK SW
L W
L B
W B
FRONT LH DOOR LOCK ACTUATOR
FRONT RH DOOR LOCK ACTUATOR
REAR LH DOOR LOCK ACTUATOR
REAR RH DOOR LOCK ACTUATOR
BACK DOOR LOCK ACTUATOR
(LHD)
(RHD)

r Lock

7 8

C

F

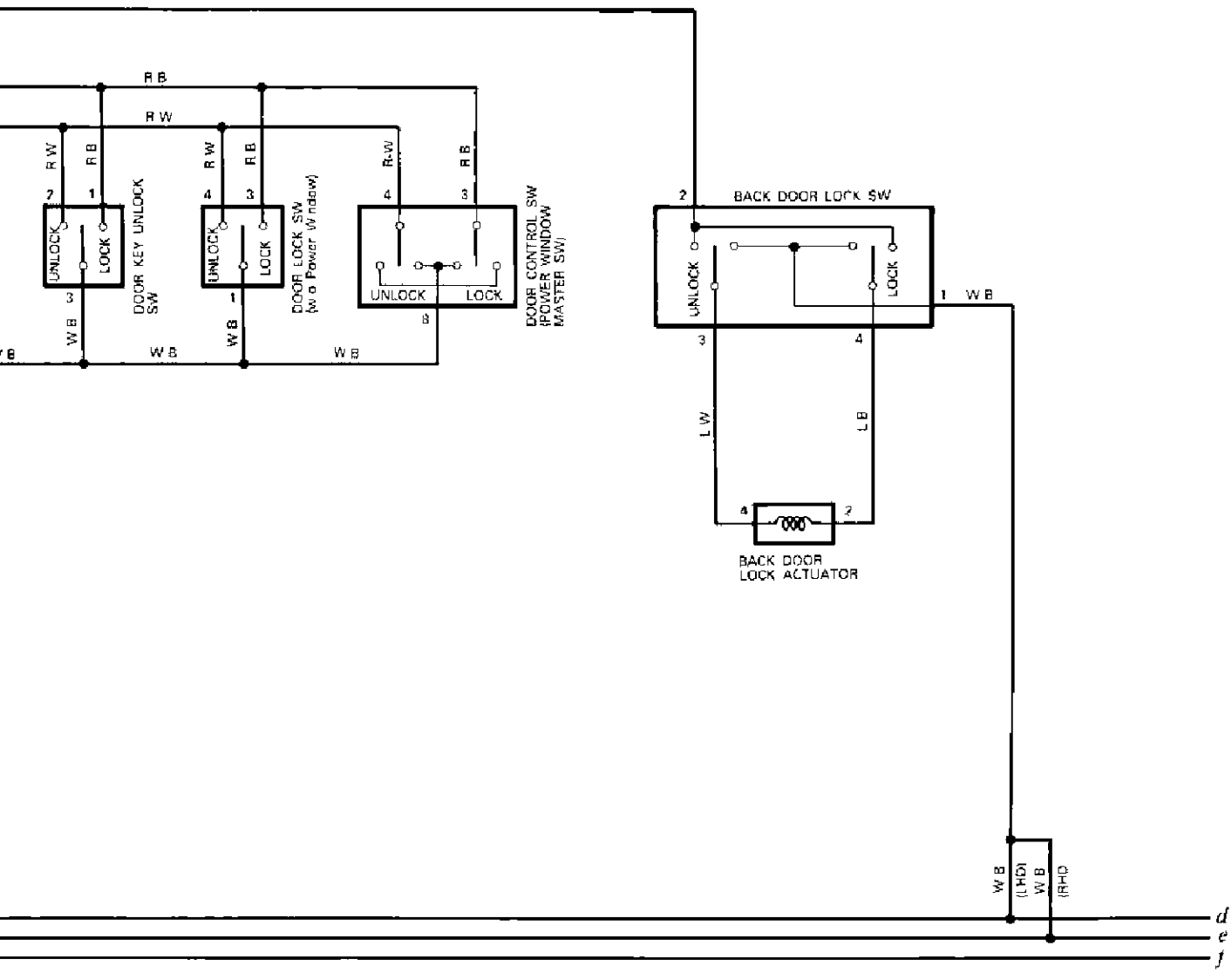

d

e

f

8 LAND CRUISER 70 (Light-Duty) (Cont'd)

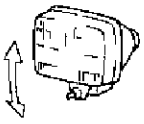

Headlight Beam Level Control

1 2

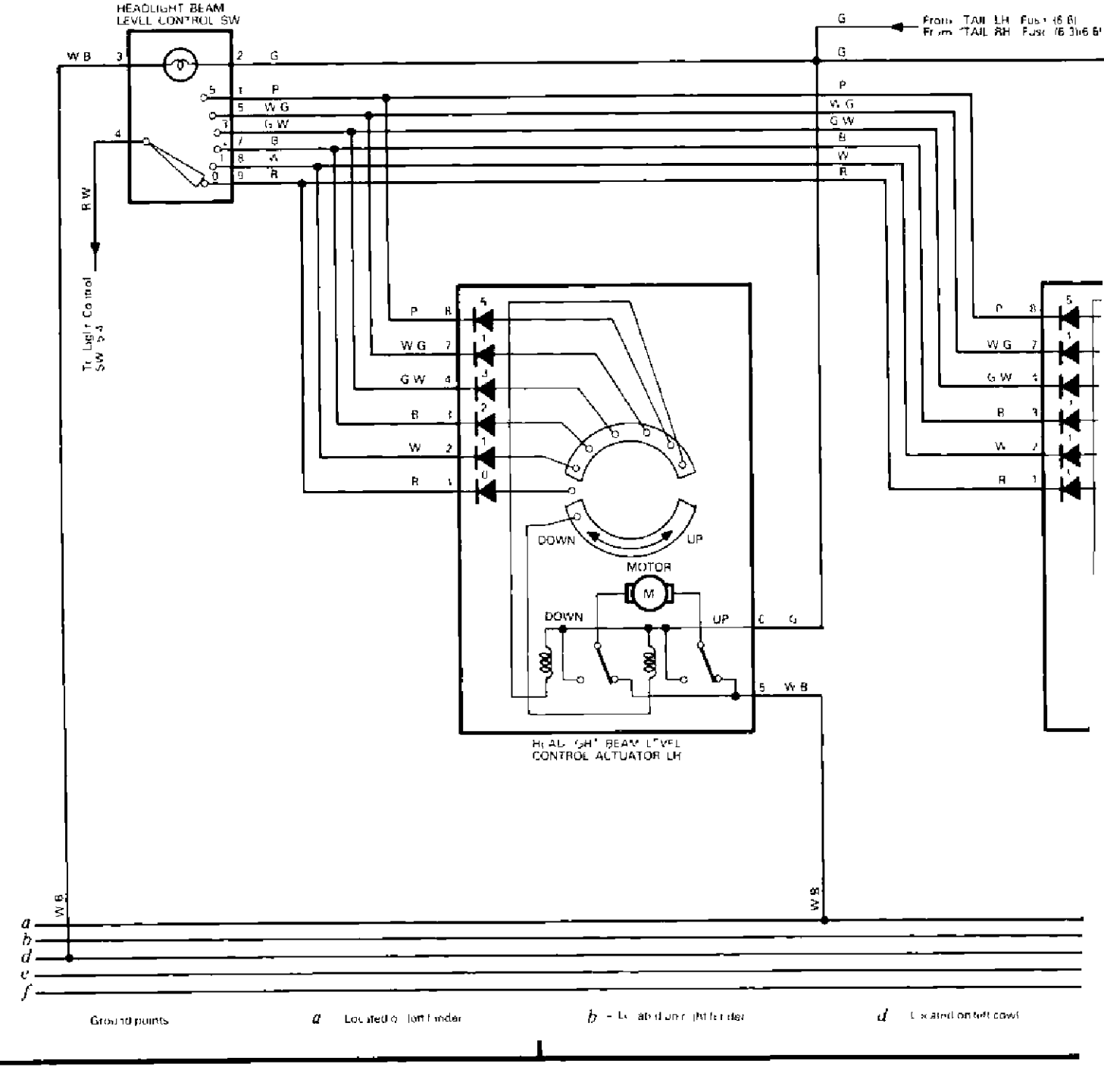

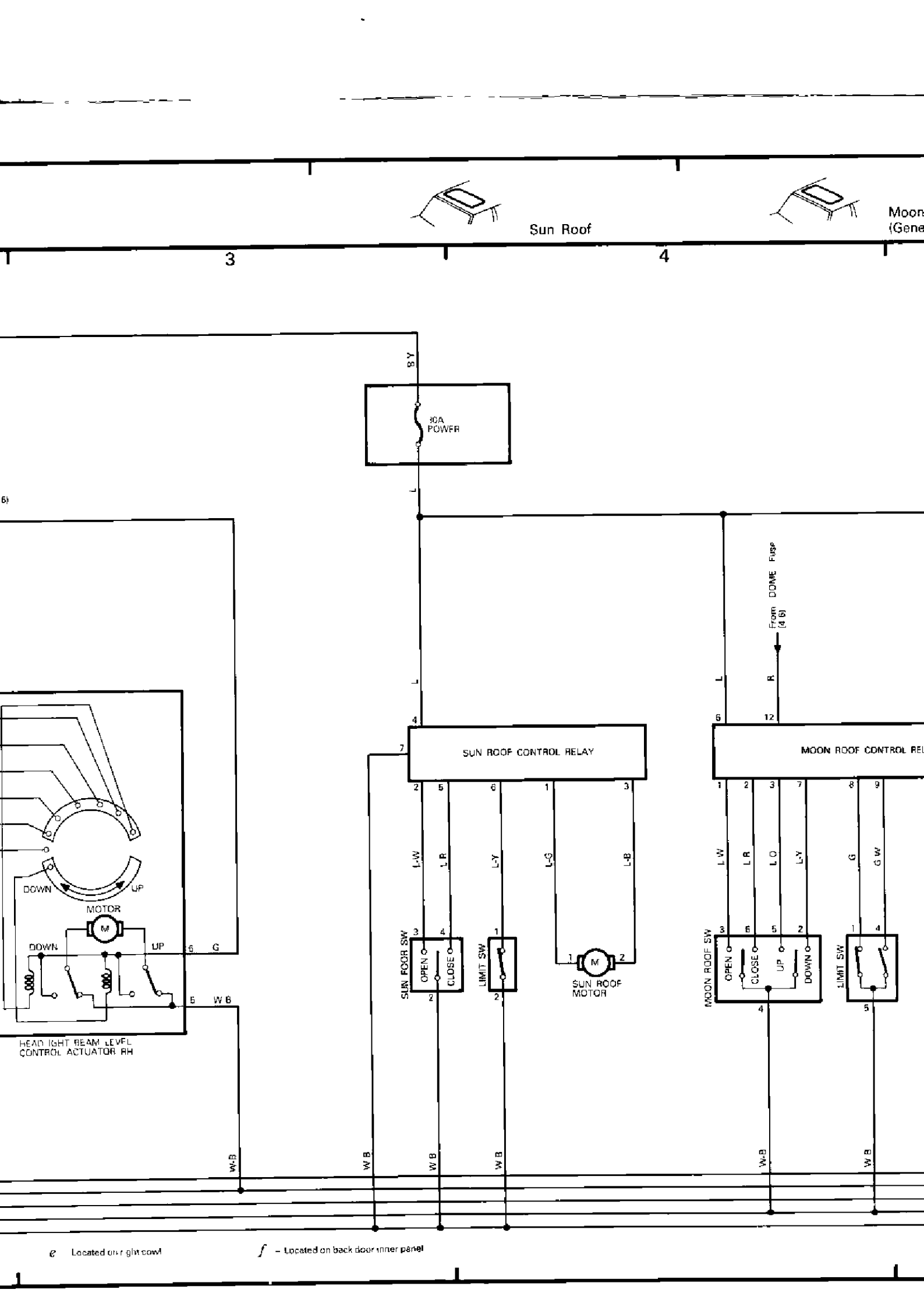

e Located on right cowl

f – Located on back door inner panel

5 6

POWER WINDOW MASTER SW

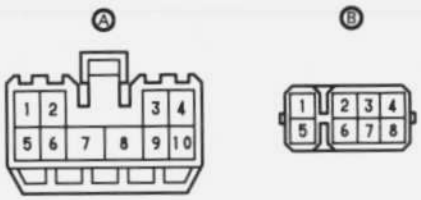

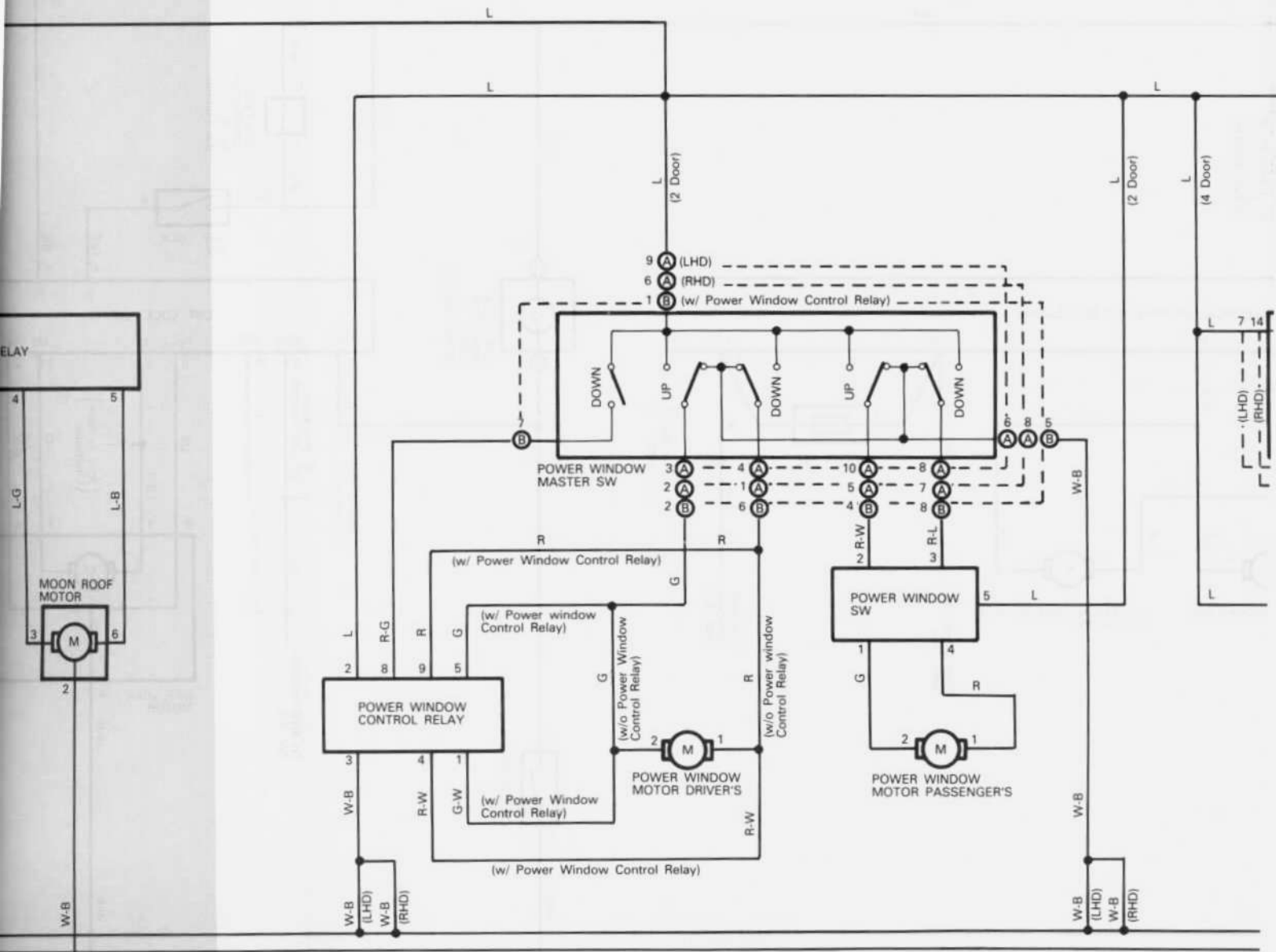

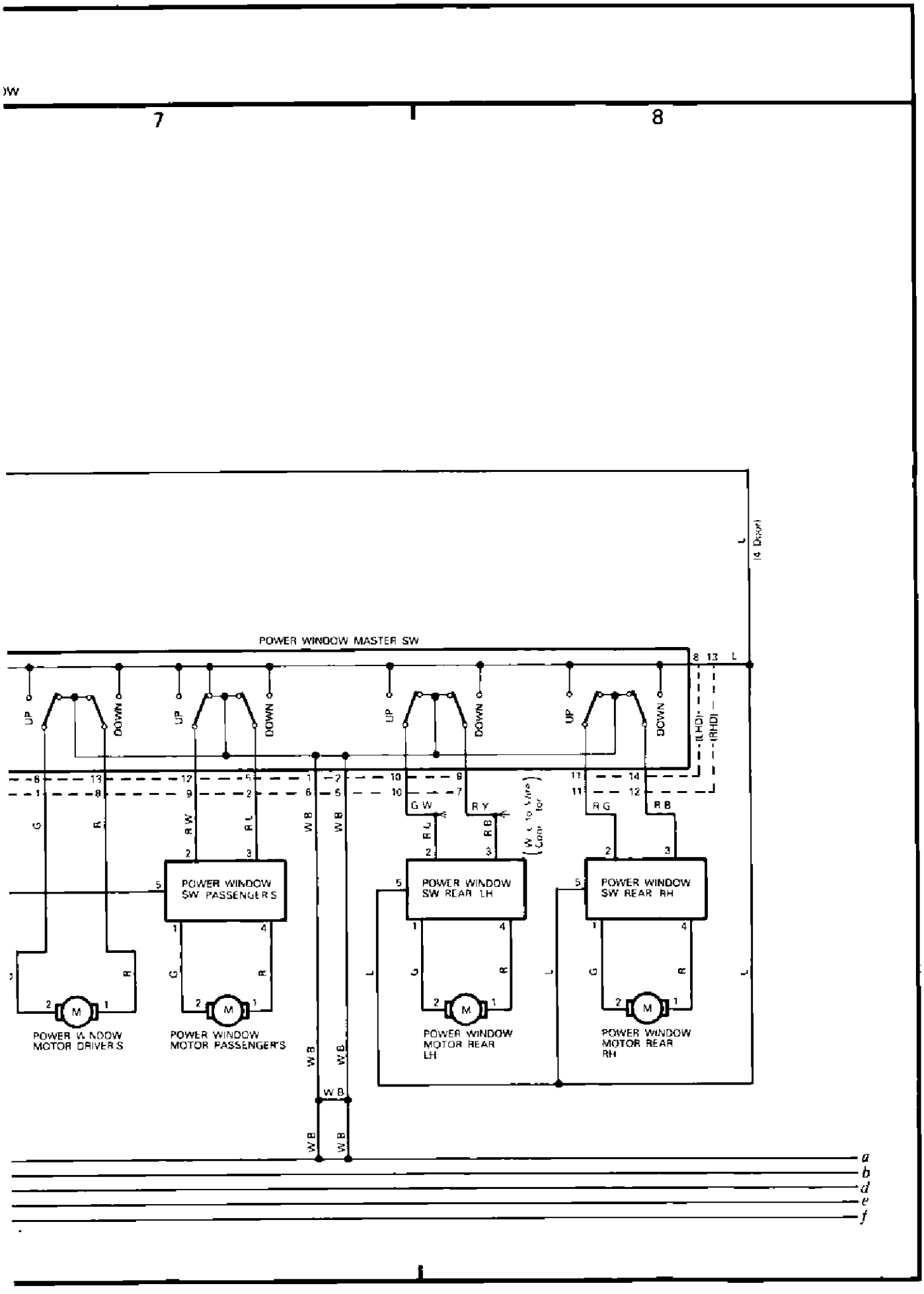
7
8
POWER WINDOW MASTER SW
UP
DOWN
(LHD)
(RHD)
(4 Door)
POWER WINDOW SW PASSENGER'S
POWER WINDOW SW REAR LH
POWER WINDOW SW REAR RH
POWER WINDOW MOTOR DRIVER'S
POWER WINDOW MOTOR PASSENGER'S
POWER WINDOW MOTOR REAR LH
POWER WINDOW MOTOR REAR RH
a
b
d
e
f

FOREWORD

This wiring diagram has been prepared to provide information on the electrical system of the TOYOTA LAND CRUISER

Applicable models: KZJ 70, 73, 77 Series
LJ 70, 72, 73, 79 Series
RJ 70, 73, 77 Series

For information which is not mentioned in this manual, please refer to the following Electrical Wiring Diagram Manuals.

Manual Name	Pub. No.
• Land Cruiser Electrical Wiring Diagram Manual	EWD 168F
• Land Cruiser (Hardtop & Canvas Top) Chassis and Body Repair Manual Supplement	RM 346E

All information in this manual is based on the latest product information at the time of publication. However, specifications and procedures are subject to change without notice.

TOYOTA MOTOR CORPORATION

English

TOYOTA LAND CRUISER
ELECTRICAL WIRING DIAGRAM

	Section No	Page
(English)		
INTRODUCTION	**A**	5
HOW TO USE THIS MANUAL	**B**	6
ABBREVIATIONS	**C**	8
RELAY LOCATIONS	**D**	22
ELECTRICAL WIRING ROUTING	**E**	28
ELECTRICAL WIRING DIAGRAM	**F**	113

English

	Location
ACCESSORY METER	4-7
AIR CONDITIONER, COOLER AND HEATER	3-2
BACK-UP LIGHT	4-5
CHARGING	2 5
CIGARETTE LIGHTER	8-6
CLOCK	8 5
COMBINATION METER	3-5
DOOR LOCK	7-6
EMISSION CONTROL (22R)	2-8
ENGINE CONTROL (22R-E)	1-4
4WD	7-3
FRONT FOG LIGHT (General)	5-1
FRONT WIPER AND WASHER	4-2
FUEL HEATER (2L-T Europe)	7 8
GLOW AND EMISSION CONTROL (2L-T Austria)	9-7
GLOW PLUG (1KZ-T)	2-7
GLOW PLUG (2L-T Ex. Austria)	2 2
GLOW PLUG (3L)	2-3
HEADLIGHT (Ex Europe)	5-3
HEADLIGHT (Europe)	5 5
HEADLIGHT BEAM LEVEL CONTROL	8-2
HEADLIGHT CLEANER	4-3
HORN	1 7
IGNITION (22R)	2-1
IGNITION (22R-E)	1-6
INTERIOR LIGHT	5 8
LIGHT REMINDER	8-5
MOON ROOF	9-5
POWER SOURCE	1-1
POWER WINDOW	9 2
RADIO AND PLAYER	8-7
REAR FOG LIGHT	3-8
REAR WINDOW DEFOGGER	4-1
REAR WIPER AND WASHER	4-4
REMOTE CONTROL MIRROR	1-8
STARTING	1 2
STOP LIGHT	4-6
TAILLIGHT AND ILLUMINATION (Ex.Europe)	5-2
TAILLIGHT AND ILLUMINATION (Europe)	6 3
TVSS (Toyota Vehicle Security System)	10-2
TRAILER SOCKET	8-8
TURN SIGNAL AND HAZARD WARNING LIGHT	6-7
UNLOCK AND SEAT BELT WARNING	10-5
WINCH	8 4

© 1993 TOYOTA MOTOR CORPORATION
All rights reserved. This book may not be reproduced or copied, in whole or in part, without the written permission of Toyota Motor Corporation

This manual consists of the following 6 sections:

No.	Section	Description
A	INDEX	Index of the contents of this manual.
	INTRODUCTION	Brief explanation of each section.
B	HOW TO USE THIS MANUAL	Instructions on how to use this manual.
C	ABBREVIATIONS	Defines the abbreviations used in this manual.
D	RELAY LOCATIONS	Shows position of the Electronic Control Unit, Relays, Relay Block, ect. This section is closely related to the wiring diagram.
E	ELECTRICAL WIRING ROUTING	Describes position of the Parts Connectors, Ground points, etc. This section is closely related to the system circuit.
F	ELECTRICAL WIRING DIAGRAM	Provides circuit diagrams showing the circuit connections.

B HOW TO USE THIS MANUAL

ELECTRICAL WIRING DIAGRAM (Location No. 1 to 9)

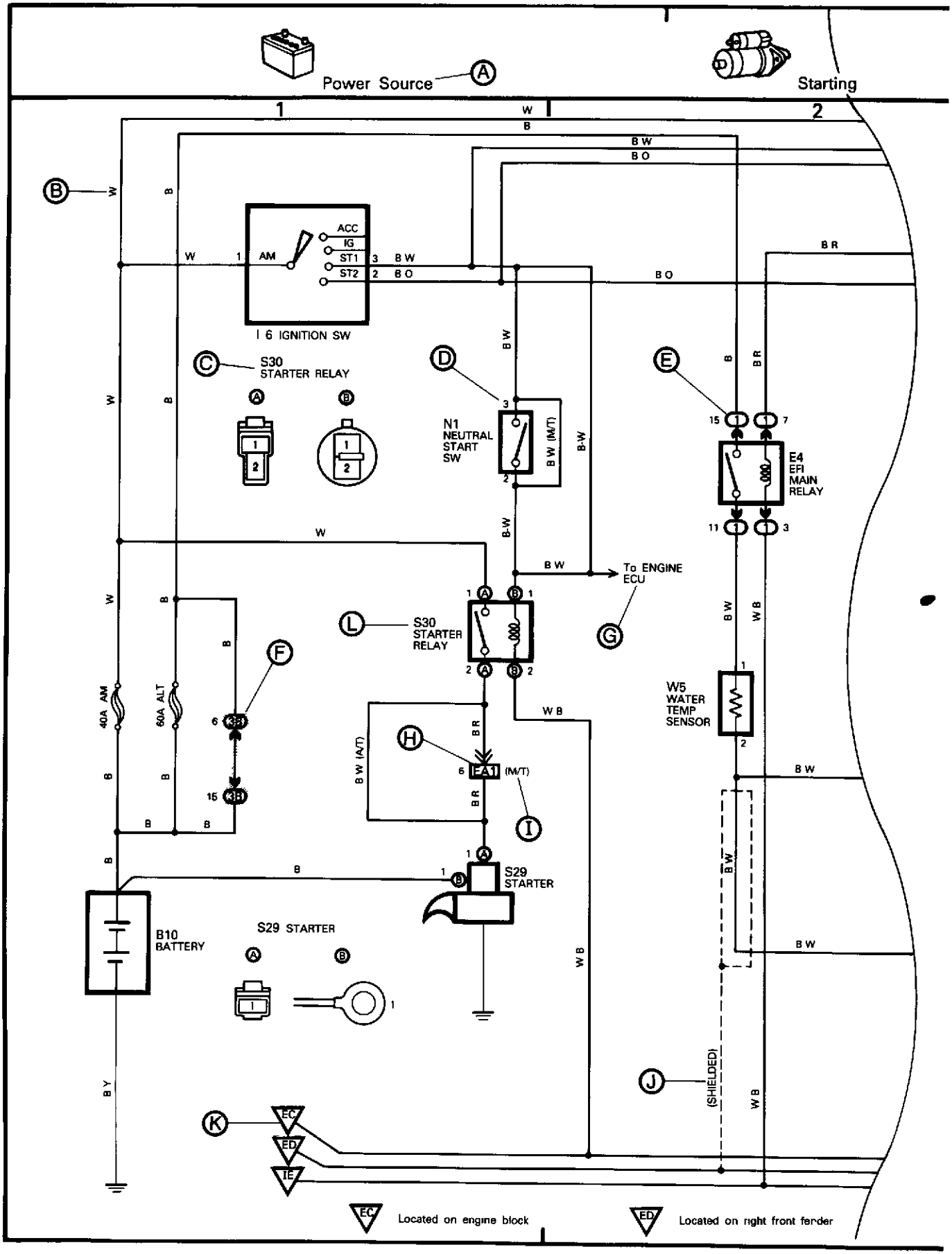

Ⓐ: System Title

Ⓑ: Indicates the wiring color.

Wire colors are indicated by an alphabetical code.

B	= Black	L	= Blue	R	= Red
BR	= Brown	LG	= Light Green	V	= Violet
G	= Green	O	= Orange	W	= White
GR	= Gray	P	= Pink	Y	= Yellow

The first letter indicates the basic wire color and the second letter indicates the color of the stripe.

Example: L – Y

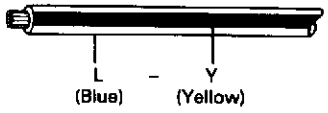

Ⓒ: Indicates the connector to be connected to a part (the numeral indicates the pin No.)

Ⓓ: Indicates the pin number of the connector. The numbering system is different for female and male connectors.

Example: Numbered in order from upper left to lower right / Numbered in order from upper right to lower left

The numbering system for the overall wiring diagram is the same as above.

Ⓔ: Indicates a Relay Block. No shading is used and only the Relay Block No. is shown to distinguish it from the J/B.

Example: ① Indicates Relay Block No. 1.

Ⓕ: Junction Block (The number in the circle is the J/B No. and the connector code is shown beside it). Junction Blocks are shaded to clearly separate them from other parts (different junction blocks are shaded differently for further clarification).

Example:

3B indicates that it is inside Junction Block No. 3.

Ⓖ: Indicates related system.

Ⓗ: Indicates the wiring harness and wiring harness connector. The wiring harness with male terminal is shown with arrows (≫). Outside numerals are pin numbers.

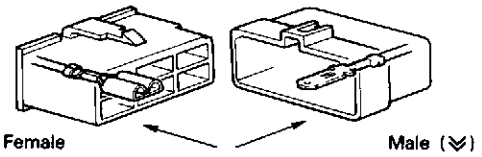

Ⓘ: ( ) are used to indicate different wiring and connector, etc. when the vehicle model, engine type, or specification is different.

Ⓙ: Indicates a shielded wiring harness.

Ⓚ: Indicates a ground point.

Ⓛ: Part Code
This code is the same as the code used in the parts list.

HINT:

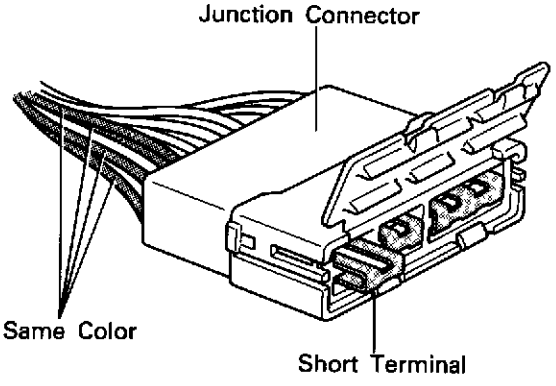

Junction connector (code: J1, J2, J3) in this manual include a short terminal which is connected to a number of wire harnesses Always perform inspection with the short terminal installed. (When installing the wire harnesses, the harnesses can be connected to any position within the short terminal grouping. Accordingly, in other vehicles, the same position in the short terminal may be connected to a wire harness from a different part.)
Wire harness sharing the same short terminal grouping have the same color.

C ABBREVIATIONS

ABBREVIATIONS

The following abbreviations are used in this manual.

A/C	=	Air Conditioner
ADD	=	Automatic Disconnecting Differential
COMB.	=	Combination
DIFF.	=	Differential
ECU	=	Electronic Control Unit
EFI	=	Electronic Fuel Injection
EGR	=	Exhaust Gas Recirculation
E-VRV	=	Electrical Vacuum Regulating Valve
Ex.	=	Except
FL	=	Fusible Link
LH	=	Left-Hand
LHD	=	Left-Hand Drive
M/T	=	Manual Transmission
R/B	=	Relay Block
RH	=	Right-Hand
RHD	=	Right-Hand Drive
SW	=	Switch
TEMP.	=	Temperature
VSV	=	Vacuum Switching Valve
w/	=	With
w/o	=	Without
2WD	=	Two Wheel Drive Vehicles
4WD	=	Four Wheel Drive Vehicles

* The titles given inside the components are the names of the terminals (terminal codes) and are not treated as being abbreviations.

D RELAY LOCATIONS

[Engine Compartment]

English

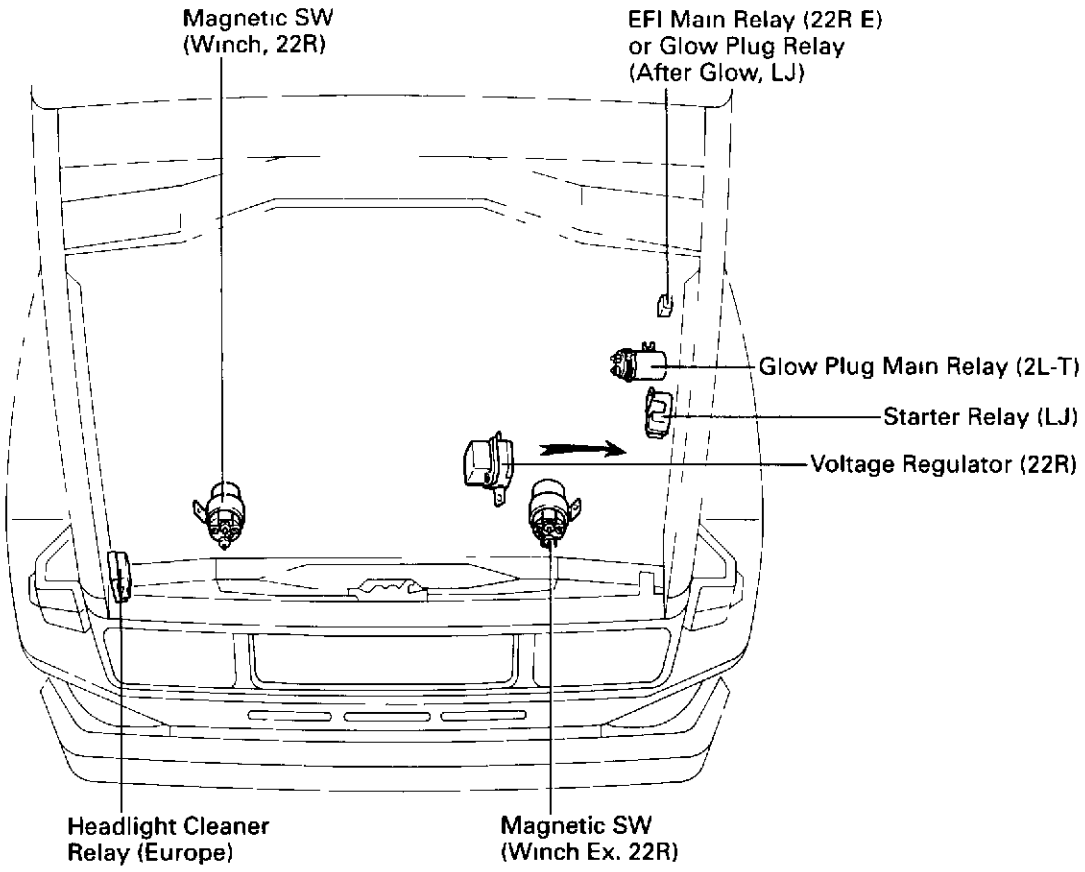

[Instrument Panel LHD]

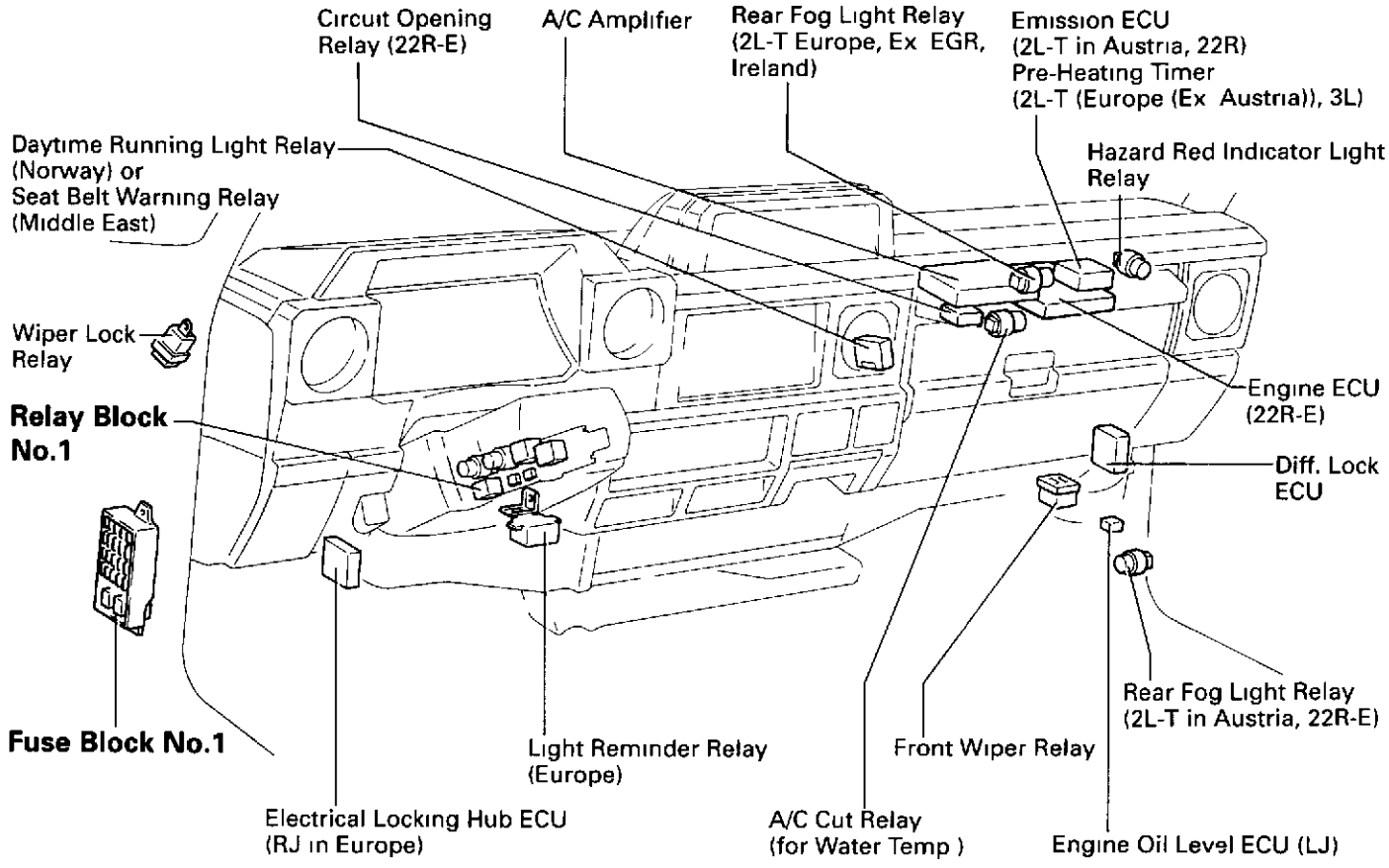

[Instrument Panel RHD]

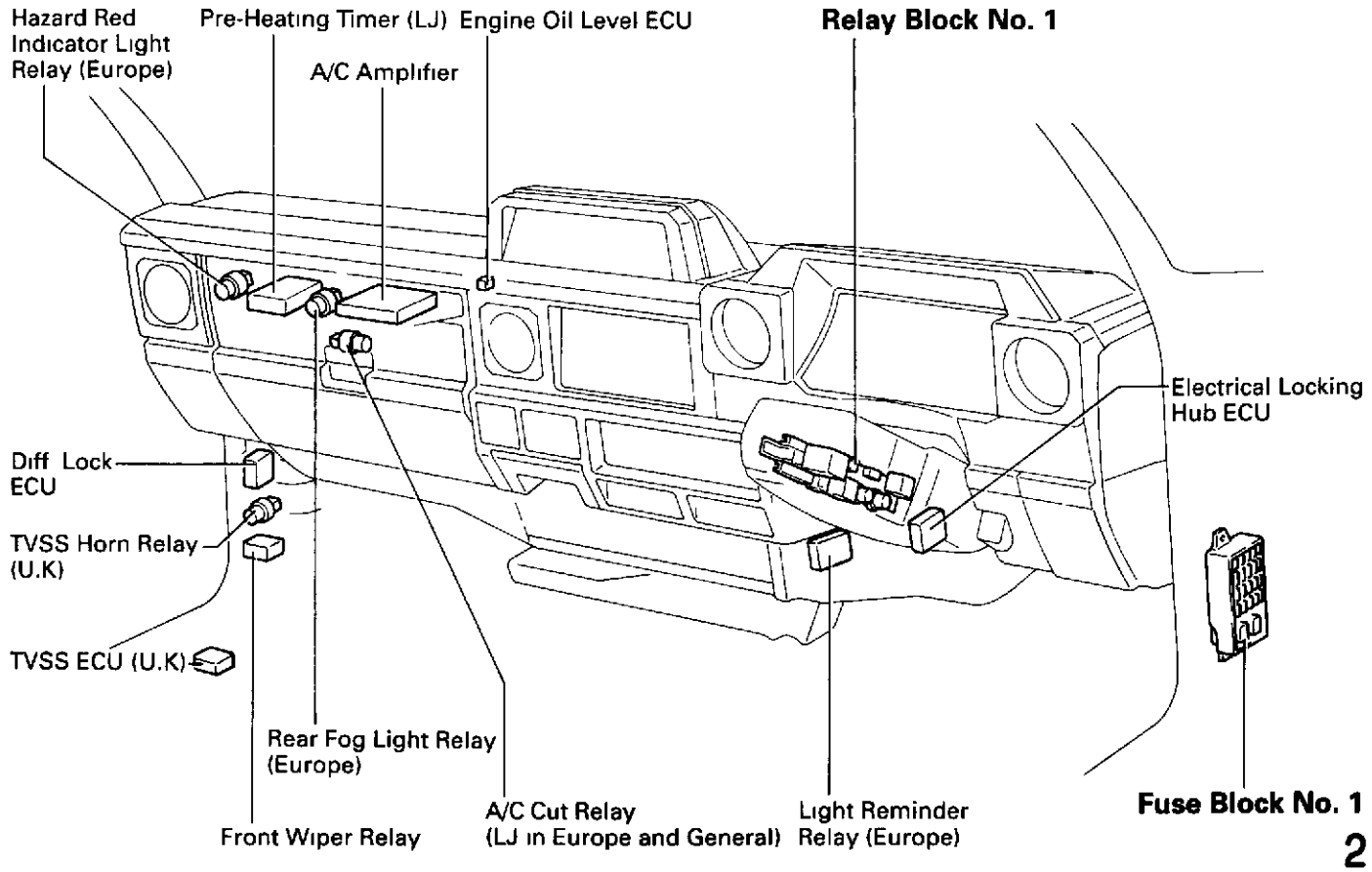

D RELAY LOCATIONS

[Body]

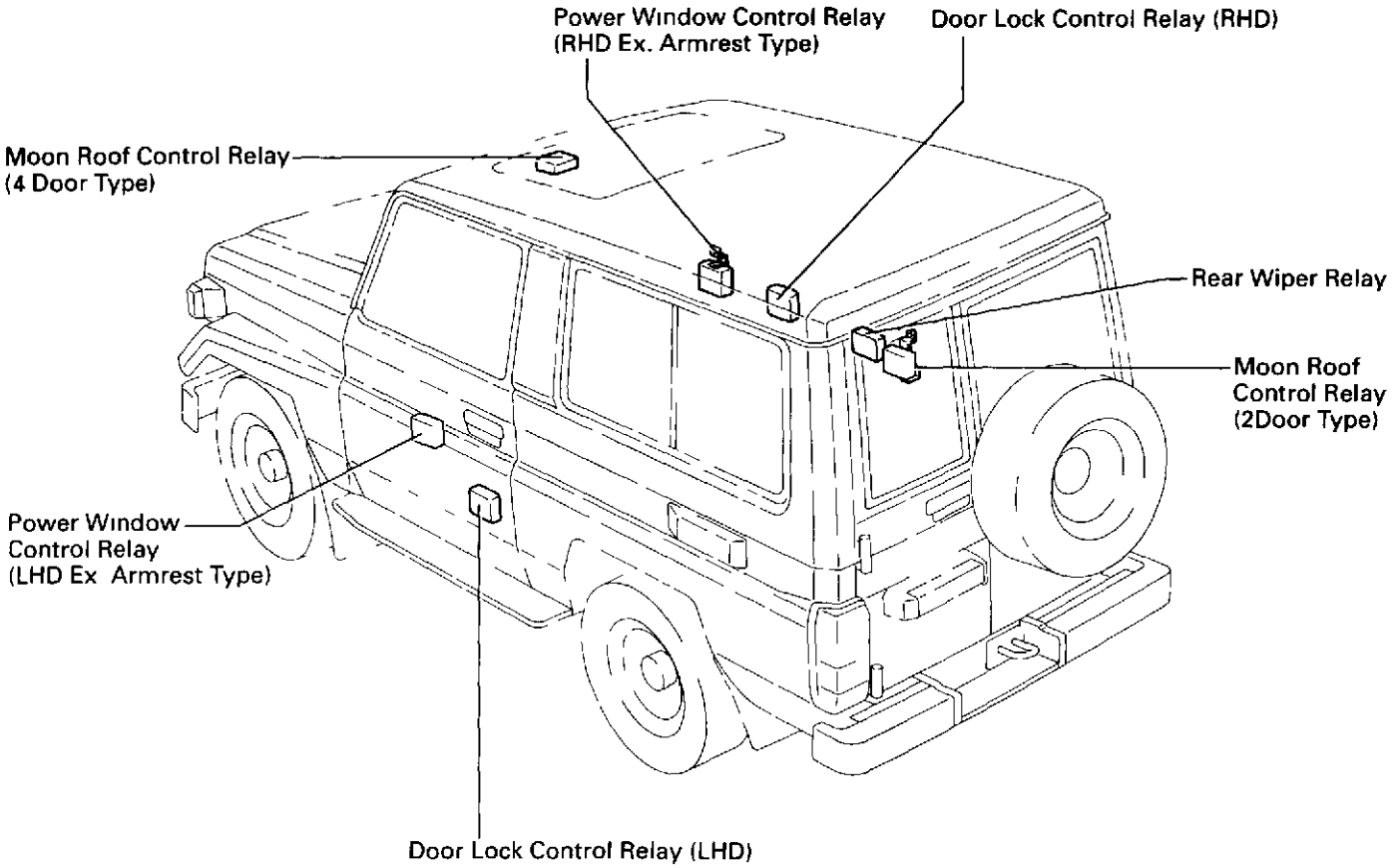

① : R/B No. 1	LHD: Left Side of Steering Column Tube (See Page 23) RHD: Right Side of Steering Column Tube (See Page 23)

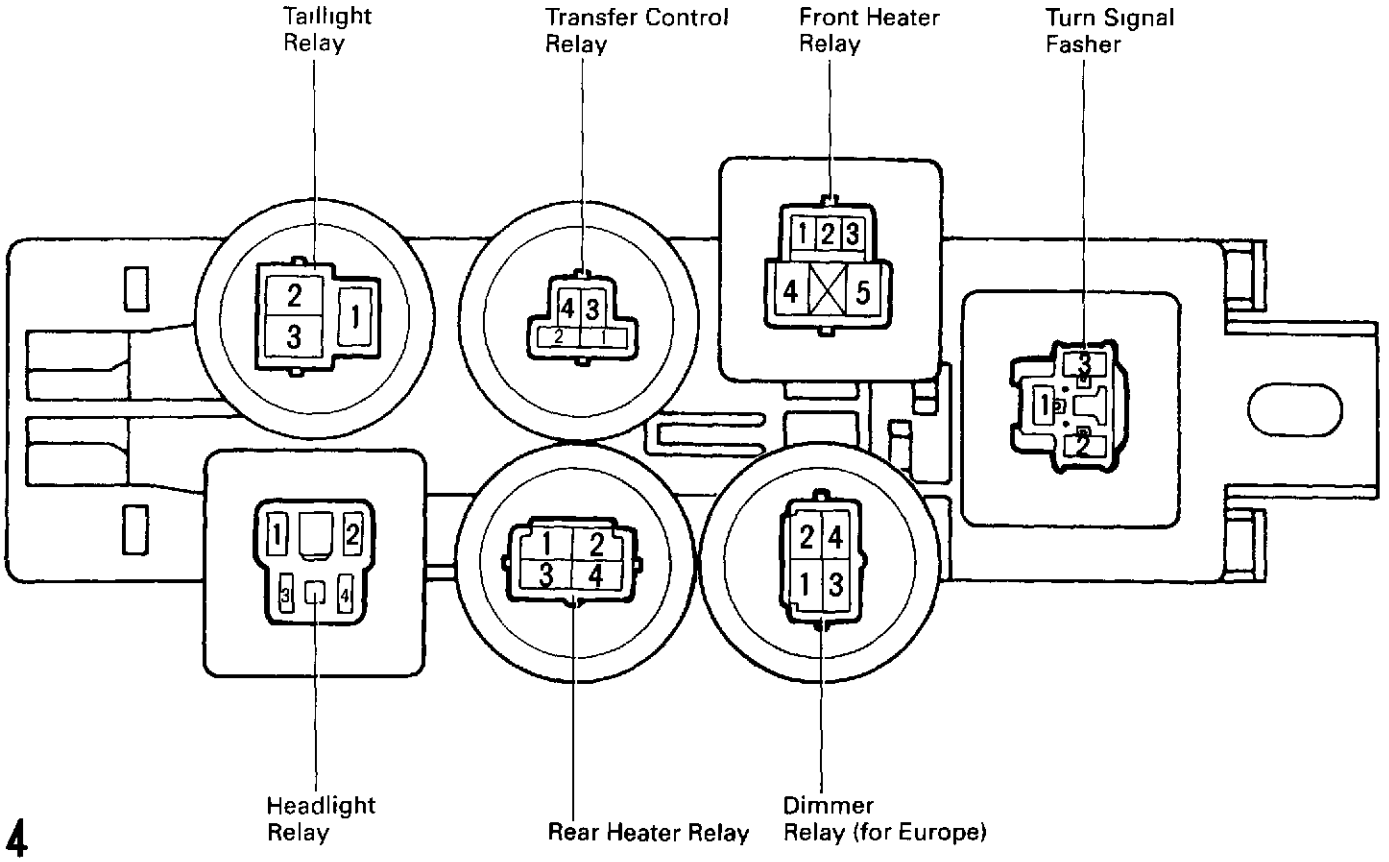

Fuse Block No. 1 (Europe)	LHD: Left Kick Panel (See Page 23) RHD: Right Kick Panel (See Page 23)

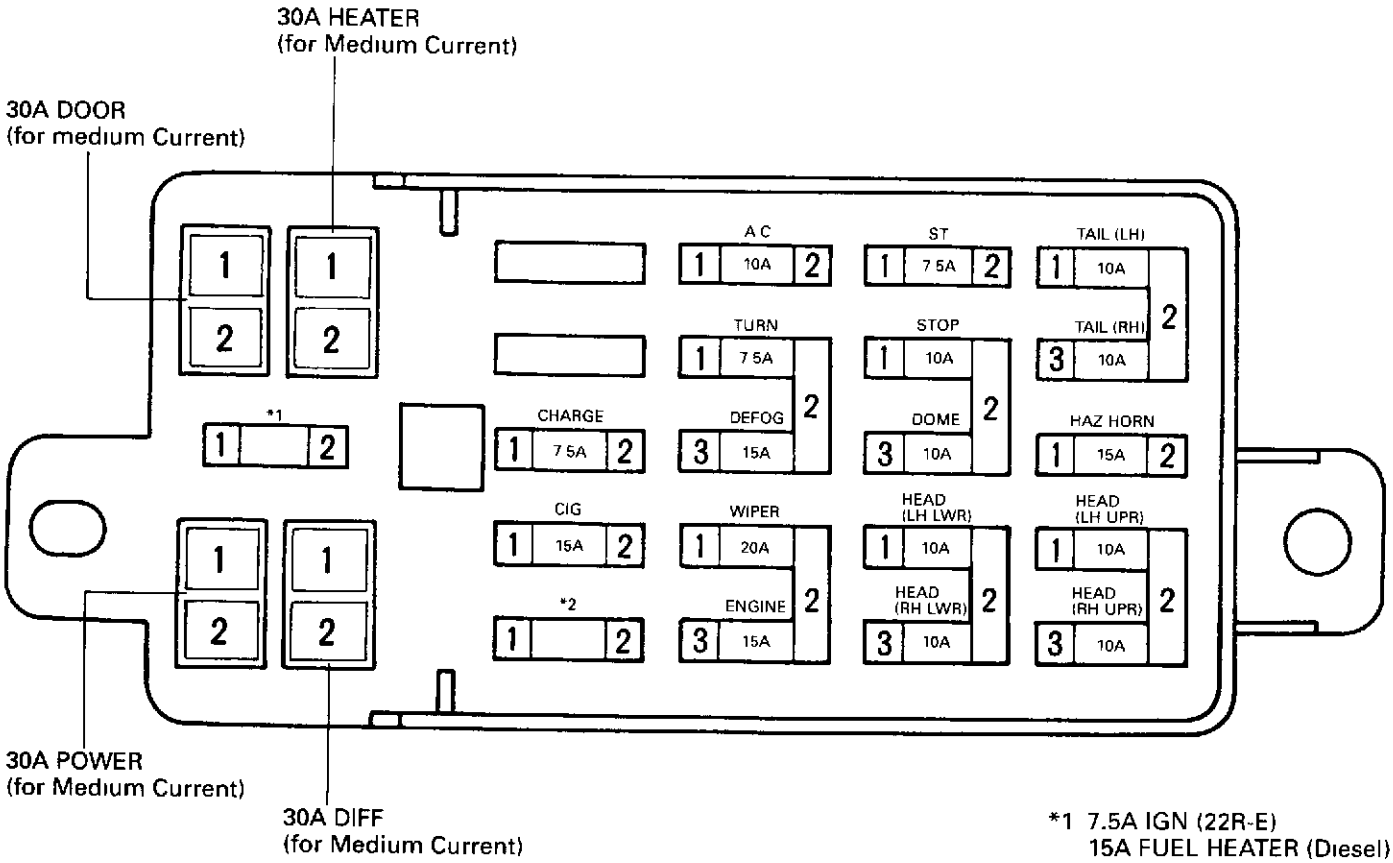

*1 7.5A IGN (22R-E)
15A FUEL HEATER (Diesel)
*2: 15A EFI (22R-E)
10A ECU-B (2L-T Austria)

E ELECTRICAL WIRING ROUTING

Position of Parts in Engine Compartment

[RHD: 1KZ-T]

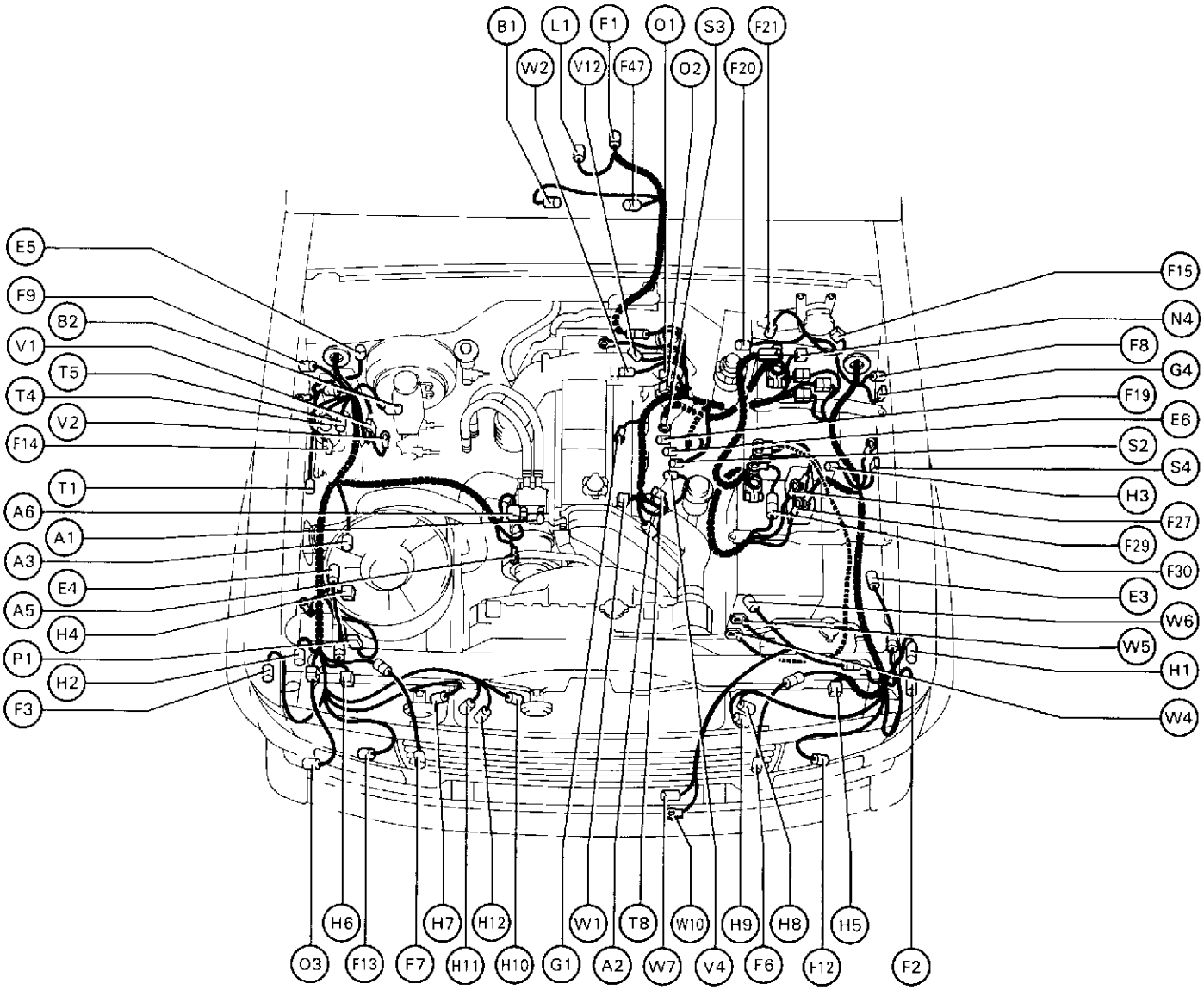

Position of Parts in Engine Compartment

Code	English	Français	Español
A 1	A/C Magnetic Clutch	Embrayage magnétique d'air conditionne	Embrague magnetico del A/C
A 2	A/C Water Temp SW	Contacteur de temperature d'eau d'air conditionne	Interruptor de temperatura del agua del A/C
A 3	Air Cleaner Warning SW	Contacteur d avertissement de filtre à air	Int de aviso del filtro de aire
A 5	Alternator	Alternateur	Alternador
A 6	Alternator	Alternateur	Alternador
B 1	Back Up Light SW	Contacteur de feux de recul	Interruptor de la luz de retroceso
B 2	Brake Fluid Level SW	Contacteur de niveau de liquide de frein	Interruptor de nivel de fluido del freno
E 3	Electrical Locking Hub Motor LH	Moteur gauche de moyeu de blocage electrique	Motor del cubo de bloqueo eléctrico izquierdo
E 4	Electrical Locking Hub Motor RH	Moteur droit de moyeu de blocage electrique	Motor del cubo de bloqueo electrico derecho
E 6	Engine Oil Level Sensor	Capteur de niveau d huile moteur	Sensor del nivel del aceite de motor
F 1	4WD Indicator Light SW	Contacteur de lampe-témoin de traction par quatre roues motrices	Interruptor de la luz del indicador de 4WD
F 2	Front Clearance Light LH	Feux de gabarit avant gauche	Luz de paso delantera izquierda
F 3	Front Clearance Light RH	Feux de gabarit avant droite	Luz de paso delantera derecha
F 6	Front Fog Light LH	Feu antibrouillard avant gauche	Luz antiniebla frontal izquierdo
F 7	Front Fog Light RH	Feu antibrouillard avant droite	Luz antiniebla frontal derecho
F 8	Front Side Turn Signal Light LH	Feu de clignotant latéral avant gauche	Luz de la señal de viraje lateral delantera izquierda
F 9	Front Side Turn Signal Light RH	Feu de clignotant lateral avant droite	Luz de la senal de viraje lateral delantera derecha
F 12	Front Turn Signal Light LH	Feu de clignotant avant gauche	Luz de la senal de viraje delantera izquierda
F 13	Front Turn Signal Light RH	Feu de clignotant avant droite	Luz de la señal de viraje delantera derecha
F 14	Front Washer Motor	Moteur de lave-glace avant	Motor del lavador delantero
F 15	Front Wiper Motor	Moteur de controle d'essuie-glace de pare-brise avant	Motor del limpiador delantero
F 19	Fuel Cut Solenoid and Pick Up Sensor	Solenoide de commande de coupure d'alimentation et capteur de signal de vitesse	Solenoide de corte de combustible y sensor captor
F 20	Fuel Filter Warning SW	Contacteur de lampe-temoin de filtre a essence	Interruptor de aviso del filtro de combustible
F 21	Fuel Heater	Chauffage de carburant	Calefactor de combustible
F 27	Fusible Link (AM1)	Element fusible (AM1)	Eslabon fusible (AM1)
F 29	Fusible Link (GLOW)	Element fusible (GLOW)	Eslabon fusible (GLOW)
F 30	Fusible Link (HEAD)	Element-fusible (HEAD)	Eslabon fusible (HEAD)
F 47	1st Position SW	Cont de position 1st	Interruptor de posicion L4
G 1	Glow Plug	Bougie de préchauffage	Tapon encendedor
G 4	Glow Plug Main Relay	Relais principal de bougies de prechauffage	Rele principal del tapon encendedor
H 1	Headlight Beam Level Control Actuator LH	Mecanisme de commande de niveau de faisceau de projecteur gauche	Activador de control del nivel del foco del faro izquierdo
H 2	Headlight Beam Level Control Actuator RH	Mecanisme de commande de niveau de faisceau de projecteur droite	Activador de control del nivel del foco del faro derecho
H 3	Headlight Cleaner Motor	Moteur de lave-phares	Motor del lavador de los faros
H 4	Headlight Cleaner Relay	Relais de lave-phares	Rele del lavador de los faros
H 5	Headlight LH	Phare gauche	Faro izquierdo
H 6	Headlight RH	Phare droite	Faro derecho
H 7	Horn (High)	Avertisseur sonore (Aigu)	Bocina (alta)
H 8	Horn (High)	Avertisseur sonore (Aigu)	Bocina (alta)
H 9	Horn (High)	Avertisseur sonore (Aigu)	Bocina (alta)
H 10	Horn (Low)	Avertisseur sonore (Grave)	Bocina (baja)
H 11	Horn (Low)	Avertisseur sonore (Grave)	Bocina (baja)
H 12	Horn (Low)	Avertisseur sonore (Grave)	Bocina (baja)
L 1	L4 Position SW	Cont de position L4	Interruptor de posicion L4
N 4	Noise Filter (for Oil Pressure Sender)	Filtre anti parasites (Pour capteur de pression d'huile)	Filtro de ruido (para transmisor de presion de aceite)
O 1	Oil Pressure Sender (+)	Capteur de pression d huile (+)	Transmisor de presion de aceite (+)
O 2	Oil Pressure Sender (-)	Capteur de pression d'huile (-)	Transmisor de presion de aceite (-)
O 3	Outer Ambient Temp Sensor	Capteur de temperature ambiante exterieure	Sensor de la temperatura ambiente exterior
P 1	Power Outlet	Prise electrique	Tomacorriente
S 2	Starter	Demarreur	Arrancador
S 3	Starter	Demarreur	Arrancador
S 4	Starter Relay	Relais de demarreur	Rele de arrancador
T 4	Transfer Control Solenoid (2WD)	Solenoide de commande de transfert (2WD)	Solenoide de control de la transferencia (2WD)
T 5	Transfer Control Solenoid (4WD)	Solenoide de commande de transfert (4WD)	Solenoide de control de la transferencia (4WD)
T 8	Turbo Pressure SW	Cont de turbo pression	Interruptor de la presion de turbo
V 1	Vacuum SW (for Brake)	Contacteur a depression (pour frein)	Interruptor de vacio (para el freno)
V 2	Vacuum SW (for Brake)	Contacteur à dépression (pour frein)	Interruptor de vacio (para el freno)
V 4	VSV (for A/C Idle-Up)	Soupape de commutation à depression (pour ralenti accelere de seur)	VSV (para marcha en vacio acelerada para el acondicionador de aire)
V 12	VSV (for TC)	Soupape de commutation a depression (pour TC)	VSV (para TC)
W 1	Water Temp Sender	Transmetteur de temperature d'eau	Transmisor de la temperatura del agua
W 2	Water Temp Sensor (for Glow)	Capteur de temperature d eau (pour pre chauffage)	Sensor de la temperatura del agua (para Glow)
W 4	Winch Main Relay	Relais principal de treuil	Rele principal de la grua
W 5	Winch Main Relay	Relais principal de treuil	Rele principal de la grua
W 6	Winch Main Relay	Relais principal de treuil	Rele principal de la grua
W 7	Winch Motor and Magnetic SW	Moteur de treuil et cont d'electro aimant	Motor de la grua y interruptor magnetico
W 10	Winch Motor and Magnetic SW	Moteur de treuil et cont d electro-aimant	Motor de la grua y interruptor magnetico

E ELECTRICAL WIRING ROUTING

Position of Parts in Instrument Panel

[RHD]

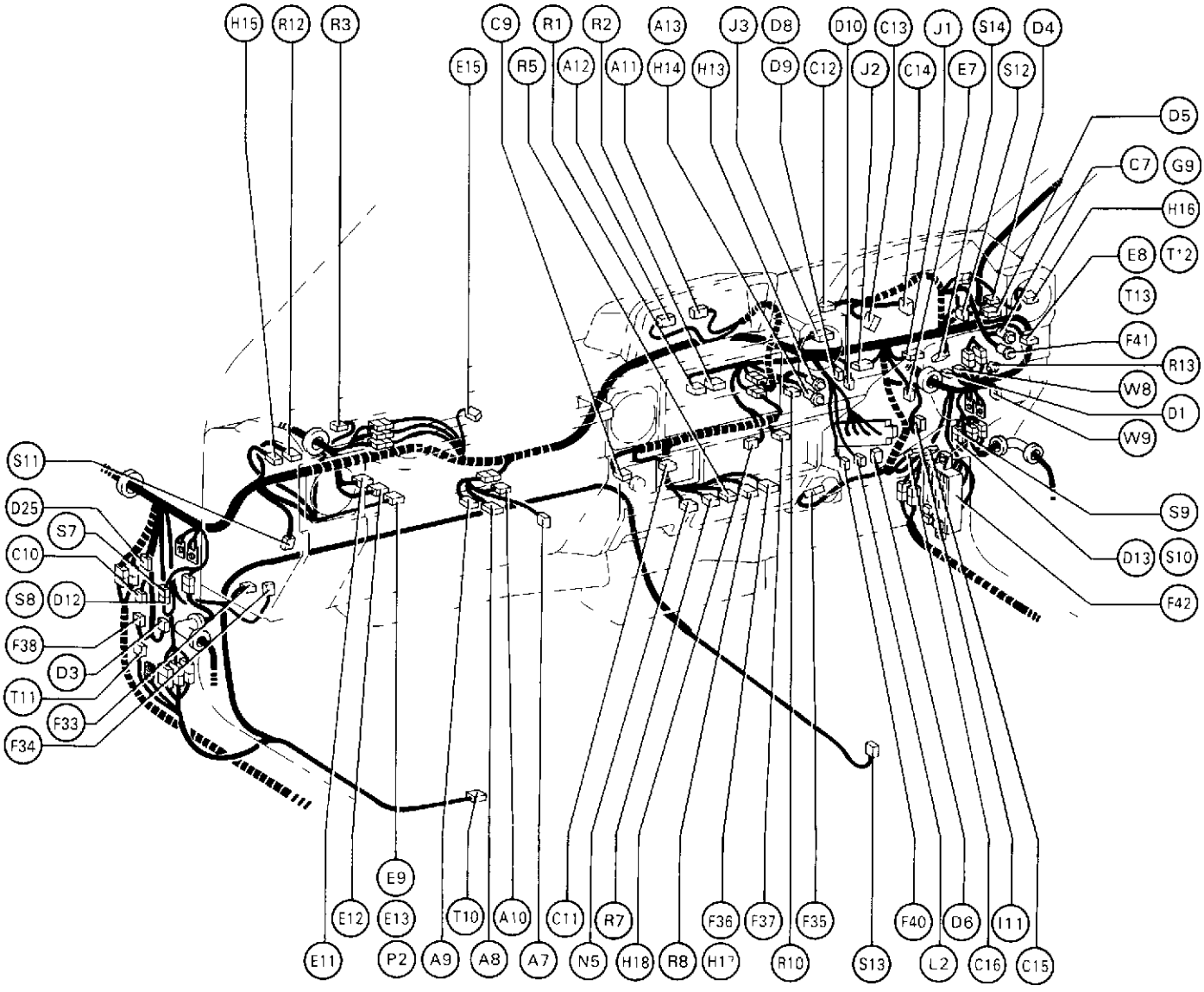

Position of Parts in Instrument Panel

Code	English	Deutsch
A 7	A/C Amplifier	Klimaanlagenverstärker
A 8	A/C Cut Relay	Klimaanlagenabschaltrelais
A 9	A/C Dual Pressure SW	Klimaanlage Dual Druckschalter
A 10	A/C Thermistor	Thermistor
A 11	Accessory Meter	Zusatzgeratenanzeige
A 12	Accessory Meter	Zusatzgeratenanzeige
A 13	Air Cleaner Warning Light	Luftfilter Warnleuchte
C 7	Check Engine Warning Light	Motorprufwarnleuchte
C 9	Cigarette Lighter	Zigarettenanzunder
C 10	Circuit Opening Relay	Schaltkreisrelais
C 11	Clock	Uhr
C 12	Combination Meter	Kombinstrument
C 13	Combination Meter	Kombinstrument
C 14	Combination Meter	Kombinstrument
C 15	Combination SW	Kombischalter
C 16	Combination SW	Kombischalter
D 3	Diff Lock ECU	Different alsperrsteuergerat
D 4	Diode (for Air Cleaner and Fuel Filter)	Diode (fur Luft und Kraftstoffilter)
D 5	Diode (for Air Cleaner)	Diode (fur Luftfilter)
D 6	Diode (for Fuel Filter)	Diode (für Kraftstoffilter)
D 8	Diode (for Interior L ght)	Diode (fur Innenleuchte)
D 9	Diode (for Light Reminder)	Diode (fur Bleleuchtungswarnung)
D 10	Diode (for Rear Fog Light)	Diode (fur Nebelschlußleuchte)
D 11	Diode (for TVSS)	Diode (für TVSS)
D 12	Door Courtesy SW Front LH	Turleuchtenschalter vorne links
D 13	Door Courtesy SW Front RH	Turleuchtenschalter vorne rechts
D 25	Diode (for Reverse)	Diode (für Rucknartsgang)
E 7	Electrical Locking Hub ECU	Nabensperrsteuergerat
E 8	Electrical Locking Hub SW	Nabensperrschalter
E 9	Emission ECU	Abgasreinigungssteuergerat
E 11	Engine ECU	Motorsteuergerat
E 12	Engine ECU	Motorsteuergerät
E 13	Engine ECU	Motorsteuergerat
E 15	Engine O l Level ECU	Motorolstandsteuergerat
F 33	Front Blower Motor	Vorderer Geblasemotor
F 34	Front Blower Resistor	Vorderer Geblasewiderstand
F 35	Front Diff Lock SW	Vorderer Differentialsperrschalter
F 36	Front Fog Light SW	Nebelscheinwerferschalter
F 37	Front Heater Blower SW	Vorderer Heizgeblaseschalter
F 38	Front Wiper Relay	Scheibenwischerrelais
F 40	Fuel Filter Warning Buzzer	Wasserabscheider Warnsummer
F 41	Fuel Filter Warning Light	Wasserabscheider Warnleuchte
F 42	Fuse Block No 1	Sicherungskaten Nr 1
G 9	Glow Indicator Light	Vorgluhanzeige
H 13	Hazard Red Indicator Light	Warnblinkkontrolleuchte
H 14	Hazard Red Indicator Light	Warnblinkkontrolleuchte
H 15	Hazard Red Indicator Light Relay	Warnblinkkontrolleuchtenrelais
H 16	Headlight Beam Level Control SW	Leuchtweitenstellschalter
H 17	Headlight Cleaner SW	Scheinwerferwascherschalter
H 18	Heater Illumination	Heizungsbeleuchtung
I 11	Ignition SW	Zundschalter
J 1	Junction Connector No 1	Verbindungsstecker Nr 1
J 2	Junction Connector No 2	Verbindungsstecker Nr 2
J 3	Junction Connector No 3	Verbindungsstecker Nr 3
L 2	Light Reminder Relay	Beleuchtungsrelais
N 5	No 1 Instrument Cluster Illumination	Instrumentenheleuchtung Nr 1
P 2	Pre Heating Timer	Vorheizschaltuhr
R 1	Radio and Player	Radio und Cassettenspieler
R 2	Radio and Player	Radio und Cassettenspieler
R 3	Rear Fog Light Relay (2L T Ex Austria)	Nebelschlußleuchtenrelais (2L T außer Osterreich)
R 5	Rear Fog Light SW	Nebelschlußleuchtenschalter
R 7	Rear Window Defogger SW	Heckscheibenheizungsschalter
R 8	Rear Wiper and Washer SW	Heckscheibenwischer und Wascherschalter
R 10	Remote Control Mirror SW	Außenspiegelstellschalter
R 12	Room Temp Sensor No 1	Innenraumtemperaturfühler Nr 1
R 13	Room Temp Sensor No 2	Innenraumtemperaturfühler Nr 2
S 7	Short Pin (for Door Courtesy SW LH)	Kurzschlußstecker (fur Turleuchtenschalter links)
S 8	Short Pin (for Door Courtesy SW LH)	Kurzschlußstecker (fur Turleuchtenschalter links)
S 9	Short Pin (for Door Courtesy SW RH)	Kurzschlußstecker (fur Turleuchtenschalter rechts)
S 10	Short Pin (for Door Courtesy SW RH)	Kurzschlußstecker (fur Turleuchtenschalter rechts)
S 11	Speaker Front Door LH	Vordertürlautsprecher links
S 12	Speaker Front Door RH	Vordertürlautsprecher rechts
S 13	Status Monitor (for TVSS)	Statusmonitor (für TVSS)
S 14	Stop Light SW	Bremsleuchtenschalter
T 10	TVSS ECU	Diebstahlsicherungssystem Steuergerat
T 11	Theft Deterrent Horn Relay	Diebstahlschutzhupenrelais
T 12	Transfer Control SW (for Europe)	Verteilergetriebeschalter (fur Europa)
T 13	Transfer Control Sw (Ex Europe)	Verteilergetriebeschalter (außer Europa)
U 1	Unlock Warning SW	Entriegelungs Warnschalter
W 8	Wiper Lock Relay	Wischervermegelungsrelais
W 9	Wiper Lock SW	Wischervermegelungsschalter

English

Deutsch

E ELECTRICAL WIRING ROUTING

Position of Parts in Body

[RHD: Hardtop and Canvas Top]

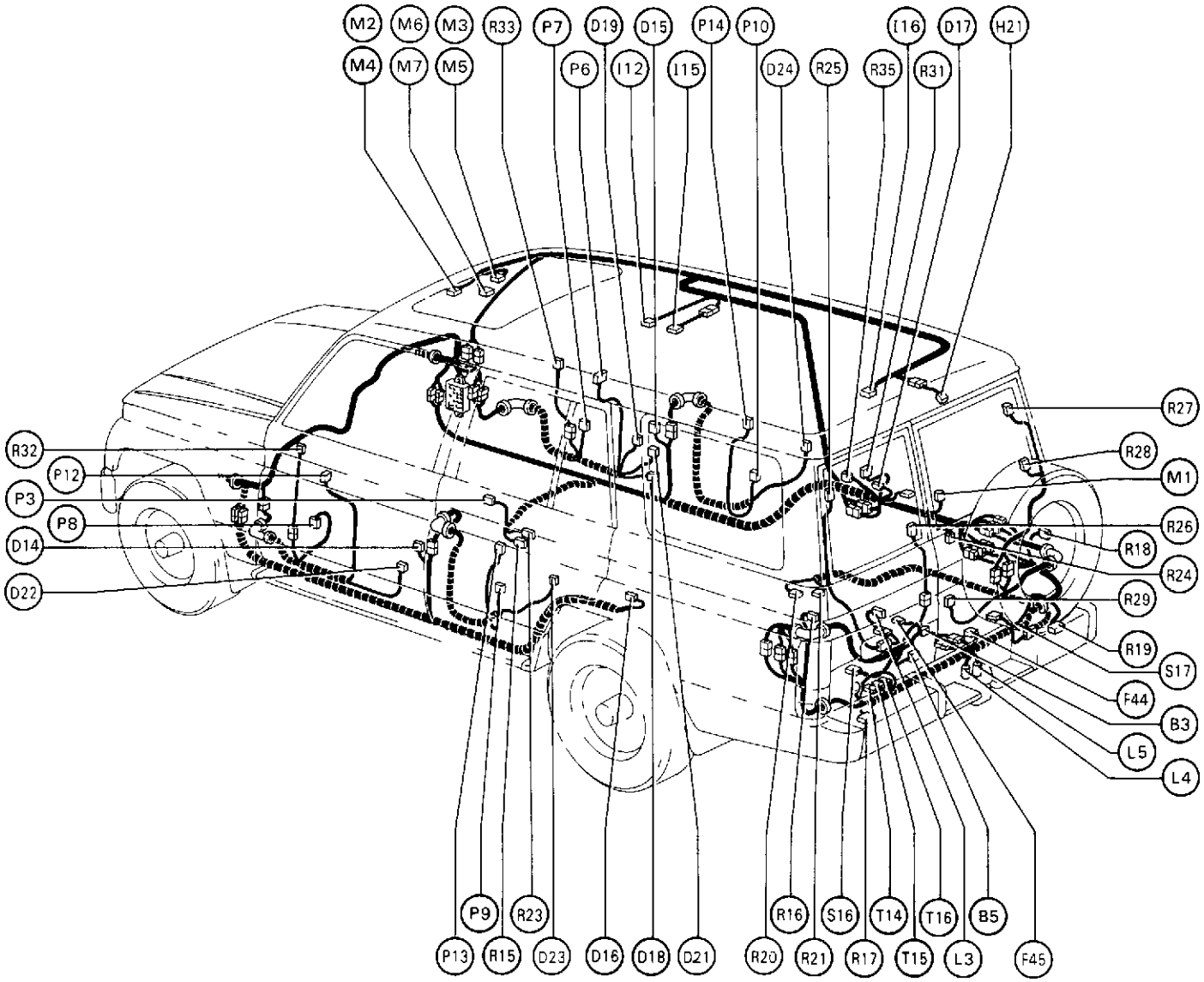

Position of Parts in Body

Code	English	Deutsch
B 3	Back Door Courtesy SW	Heckklappenleuchtenschalter
B 5	Back Door Lock Motor	Heckklappenverriegelungsmotor
D 14	Door Courtesy SW Front LH	Turleuchtenschalter vorne links
D 15	Door Courtesy SW Front RH	Turleuchtenschalter vorne rechts
D 16	Door Courtesy SW Rear LH	Turleuchtenschalter hinten links
D 17	Door Courtesy SW Rear RH	Türleuchtenschalter hinten rechts
D 18	Door Key Lock and Unlock SW (for Driver's Side)	Turverriegelungsschalter (Fahrerseite)
D 19	Door Lock Control Relay	Turverriegelungs Steuerrelais
D 21	Door Lock Motor (for Driver's Side)	Turverriegelungsmotor (Fahrerseite)
D 22	Door Lock Motor (for Passenger's Side)	Turverriegelungsmotor (Beifahrerseite)
D 23	Door Lock Motor Rear LH	Turverriegelungsmotor hinten links
D 24	Door Lock Motor Rear RH	Turverriegelungsmotor hinten, rechts
F 44	Fuel Sender (Short, Middle Wheel Base)	Kraftstoffstandgeber (kurzer und mittlerer Radstand)
F 45	Fuel Sender (Semi-Long Wheel Base)	Kraftstoffstandgeber (halblanger Radstand)
H 21	High Mount Stop Light	Zusatzbremsleuchte
I 12	Interior Light Front (Ex Semi long Wheel Base w/ Moon Roof)	Vordere Innenraumleuchte (außer halblanger Radstand mit Monddach)
I 15	Interior Light Front (Semi Long Wheel Base w/ Moon Roof)	Vordere Innenraumleuchte (halblanger Radstand mit Monddach)
I 16	Interior Light Rear	Hintere Innenraumleuchte
L 3	License Plate Light (w/ Auxiliary Fuel Tank)	Kennzeichenleuchte (mit Zusatz Kraftstofftank)
L 4	License Plate Light LH	Kennzeichenleuchte, links
L 5	License Plate Light RH	Kennzeichenleuchte, rechts
M 1	Moon Roof Control Relay (2Door)	Monddachrelais (2turig)
M 2	Moon Roof Control Relay (4Door)	Monddachrelais (4turig)
M 3	Moon Roof Control SW and Personal Light (4Door)	Monddachschalter und Leseleuchte (4turig)
M 4	Moon Roof Control SW and Personal Light (2Door)	Monddachschalter und Leseleuchte (2turig)
M 5	Moon Roof Limit SW (2Door)	Monddach-Endschalter (2turig)
M 6	Moon Roof Limit SW and Motor (4Door)	Monddach-Endschalter und Motor (4turig)
M 7	Moon Roof Motor (2Door)	Monddachmotor (2turig)
P 3	Parking Brake SW	Handbremsschalter
P 6	Power Window Master SW (Arm Rest Type)	Scheibenheber-Hauptschalter
P 7	Power Window Motor (for Driver's Side)	Fensterhebermotor (Fahrerseite)
P 8	Power Window Motor (for Passenger's Side)	Fensterhebermotor (Beifahrerseite)
P 9	Power Window Motor Rear LH	Fensterhebermotor, hinten, links
P 10	Power Window Motor Rear RH	Fensterhebermotor hinten, rechts
P 12	Power Window SW (for Arm Rest Type Passenger's Side)	Fensterheberschalter (fur Beifahrerseite) (Armstutze)
P 13	Power Window SW Rear LH	Fensterheberschalter, hinten, links
P 14	Power Window SW Rear RH	Fensterheberschalter hinten, rechts
R 15	Rear Blower Motor and Resistor	Hinterer Geblasemotor und Widerstand
R 16	Rear Combination Light LH	Hinteren-Kombileuchte links
R 17	Rear Combination Light LH	Hinteren Kombileuchte, links
R 18	Rear Combination Light RH	Hinteren Kombileuchte, rechts
R 19	Rear Combination Light RH	Hinteren-Kombileuchte, rechts
R 20	Rear Diff Lock Motor	Hinterer Differentialsperrmotor
R 21	Rear Diff Lock SW	Hinterer Differentialsperrschalter
R 23	Rear Heater Blower SW	Hinterer Geblaseschalter
R 24	Rear Washer Motor	Heckscheibenwaschermotor
R 25	Rear Window Defogger LH (+)	Heckscheibenheizung, links (+)
R 26	Rear Window Defogger LH (–)	Heckscheibenheizung, links (–)
R 27	Rear Window Defogger RH (+)	Heckscheibenheizung, rechts (+)
R 28	Rear Window Defogger RH (–)	Heckscheibenheizung, rechts (–)
R 29	Rear Wiper Motor	Heckscheibenwischermotor
R 31	Rear Wiper Relay	Heckscheibenwischerrelais
R 32	Remote Control Mirror LH	Außenspiegelstellmotor links
R 33	Remote Control Mirror RH	Außenspiegelstellmotor rechts
R 35	Room Temp Sensor No 2	Innenraumtemperaturfuhler Nr 2
S 16	Speaker Rear LH	Lautsprecher hinten links
S 17	Speaker Rear RH	Lautsprecher hinten rechts
T 14	Trailer Socket	Anhangerstecker
T 15	Trailer Socket	Anhangerstecker
T 16	Trailer Socket	Anhangerstecker

E ELECTRICAL WIRING ROUTING

□ : Location of Connector Joining Wire Harness and Wire Harness
▽ : Location of Ground Points

[RHD: 1KZ-T]

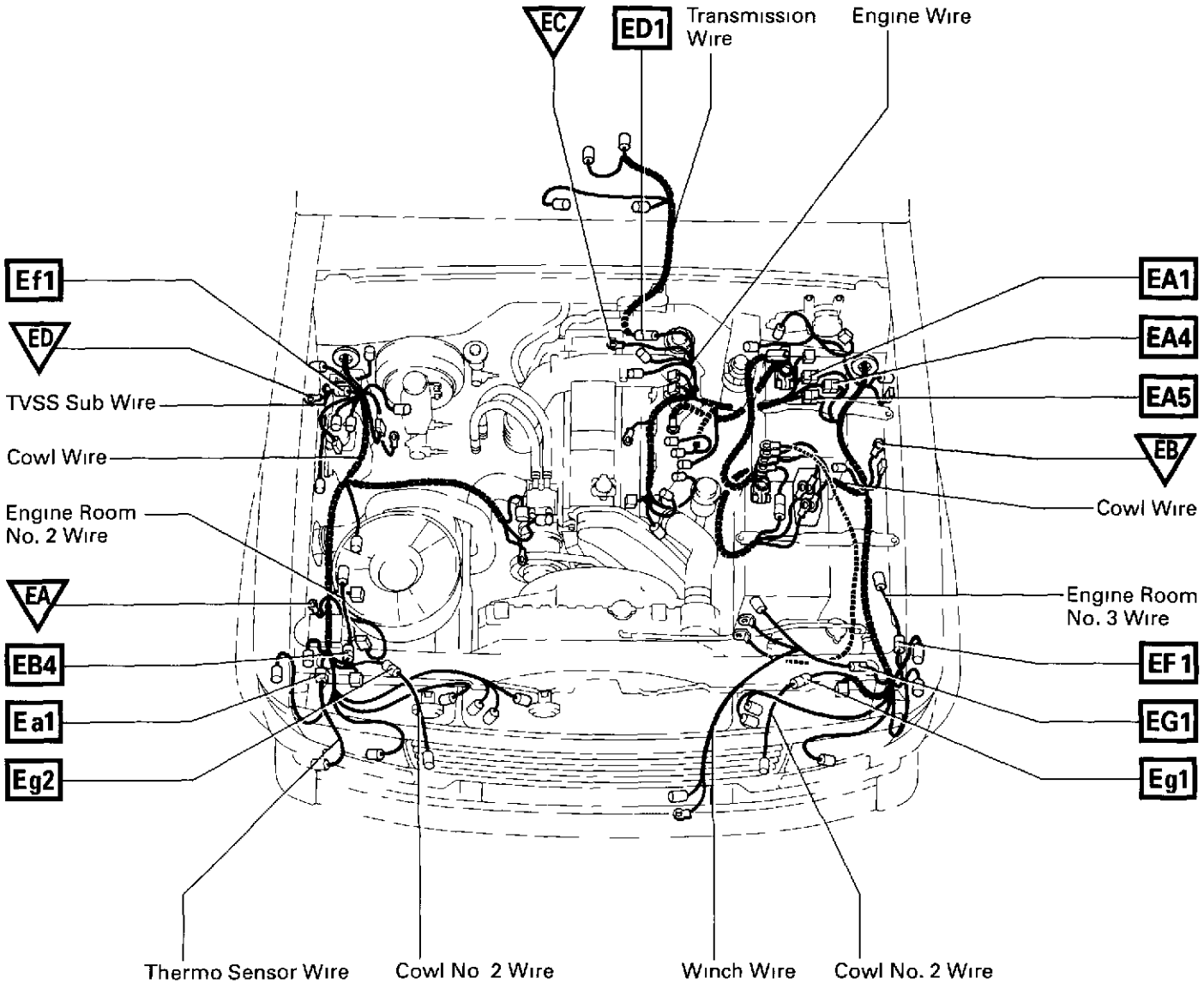

Connector Joining Wire Harness and Wire Harness

EA1 BLACK

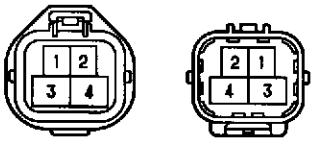

EA4 GRAY

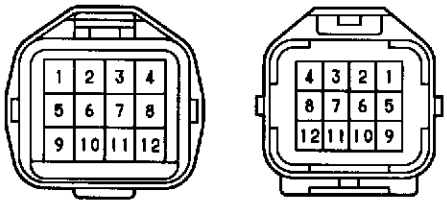

EA5 DARK GRAY

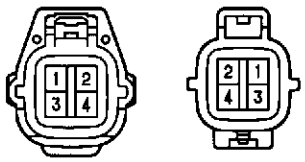

EB4 GRAY

ED1 GRAY

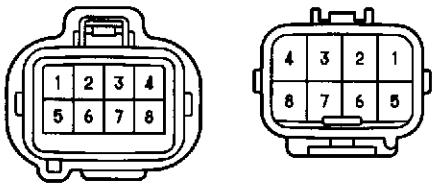

EF1 GRAY

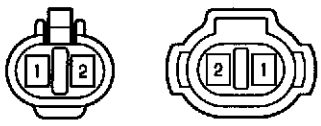

EG1 BLACK

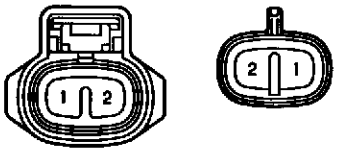

Ea1 GRAY

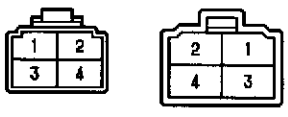

Ef1 GRAY

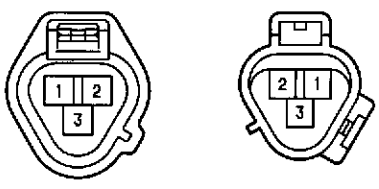

Eg1 GRAY

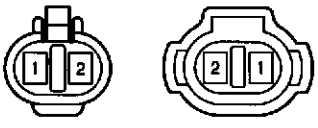

Eg2 GRAY

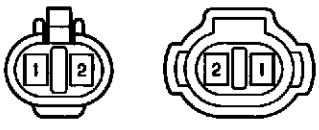

E ELECTRICAL WIRING ROUTING

□ : Location of Connector Joining Wire Harness and Wire Harness
▽ : Location of Ground Points

[RHD]

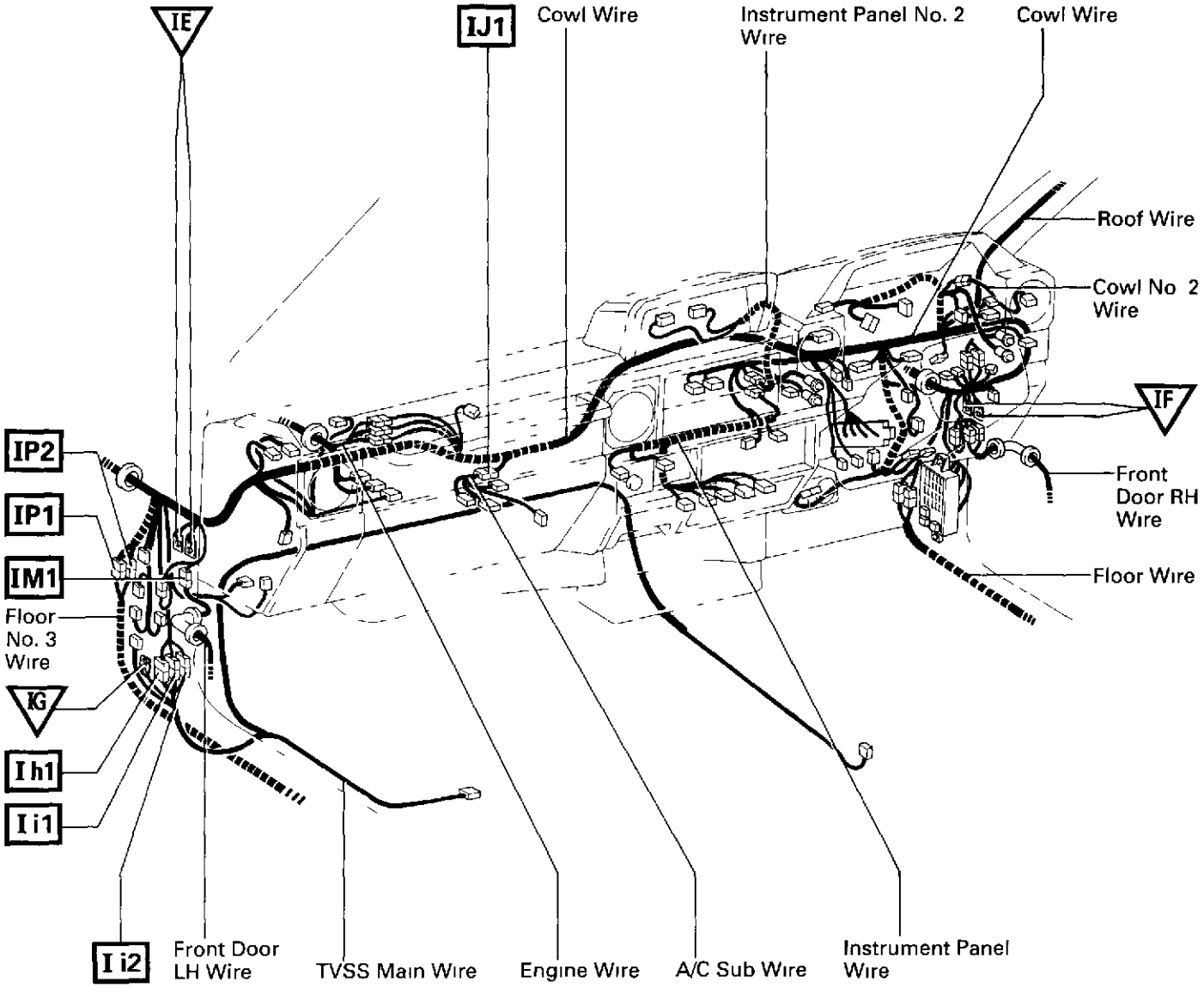

Connector Joining Wire Harness and Wire Harness

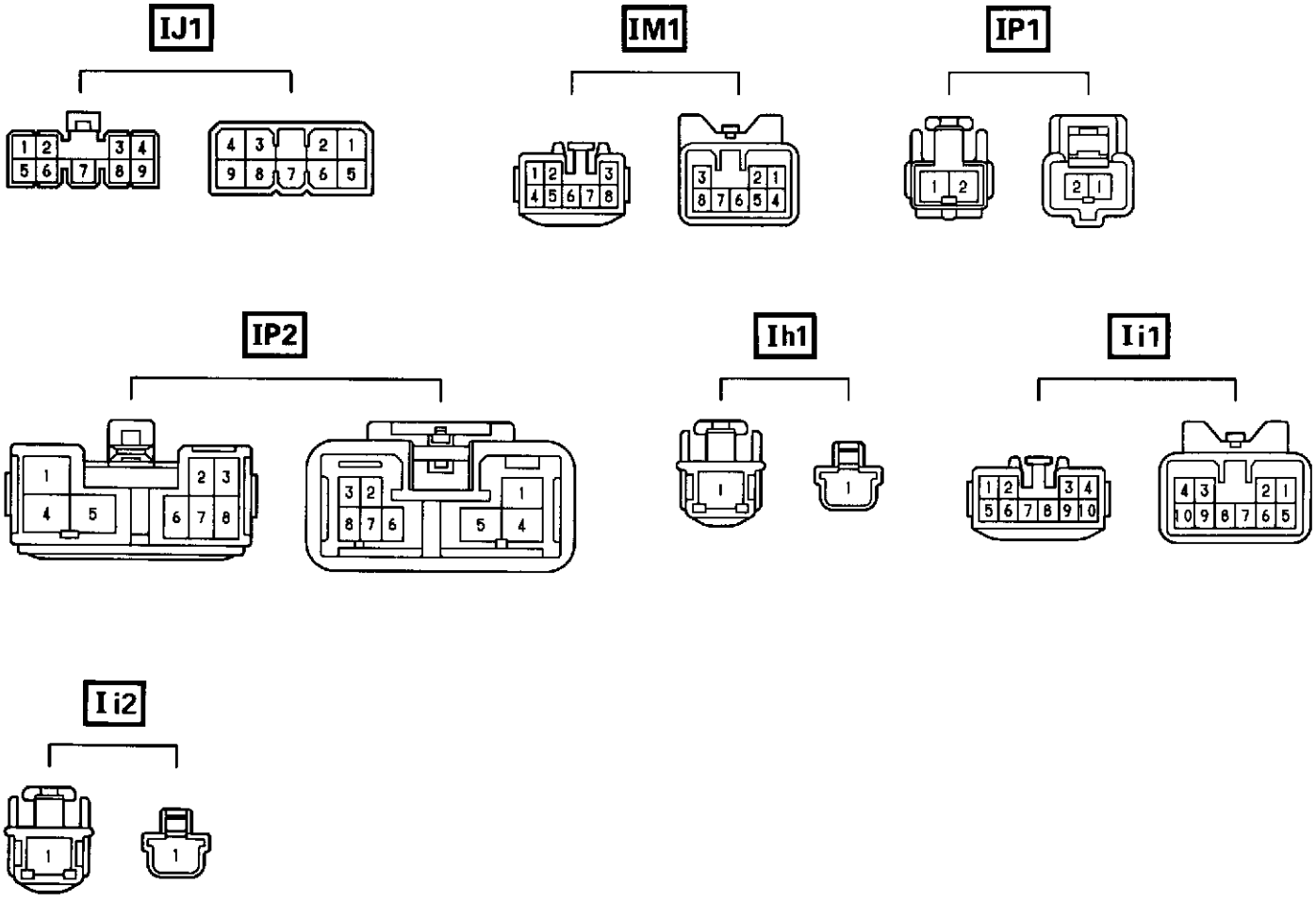

E ELECTRICAL WIRING ROUTING

□ : Location of Connector Joining Wire Harness and Wire Harness
▽ : Location of Ground Points

[RHD]

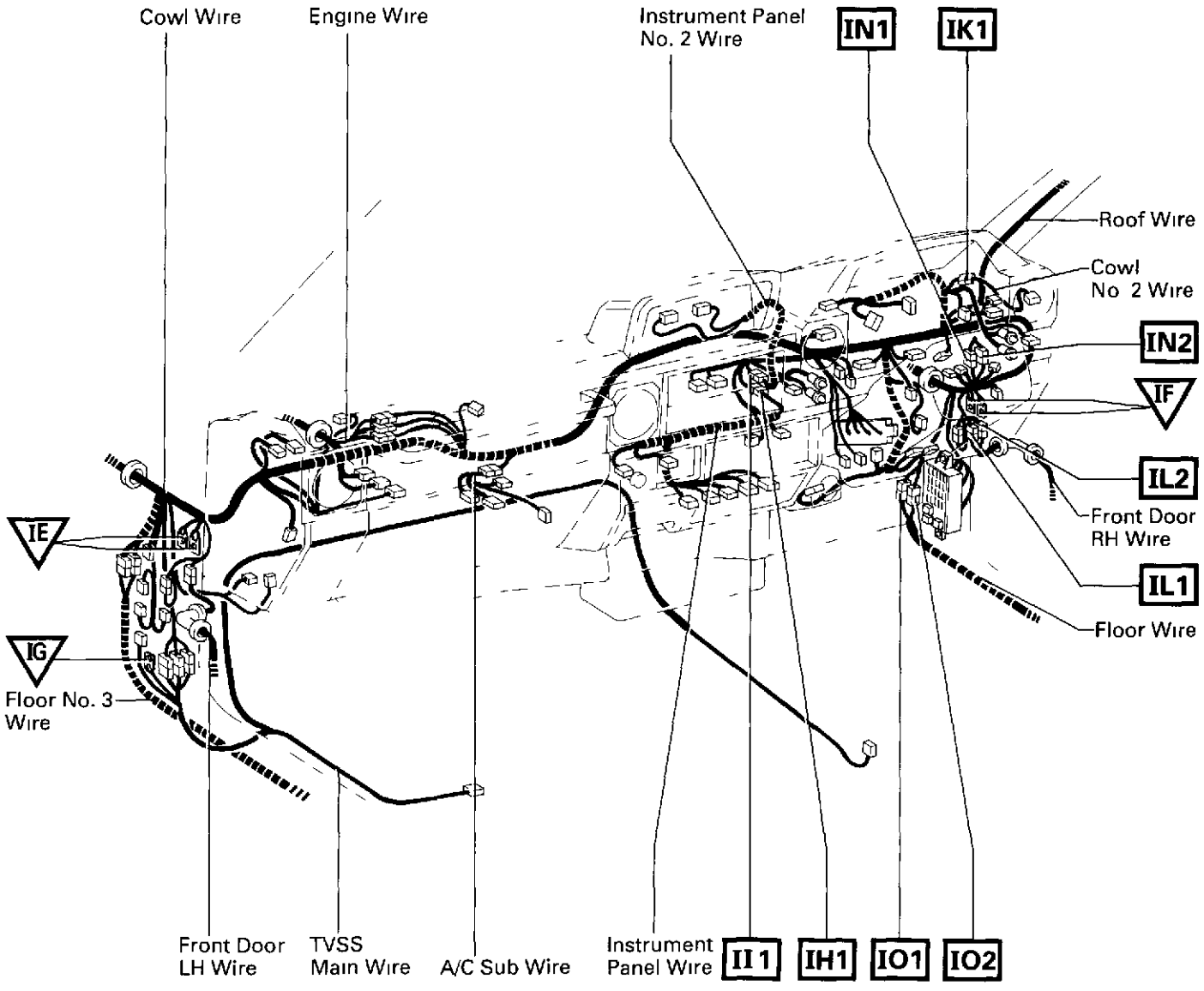

Connector Joining Wire Harness and Wire Harness

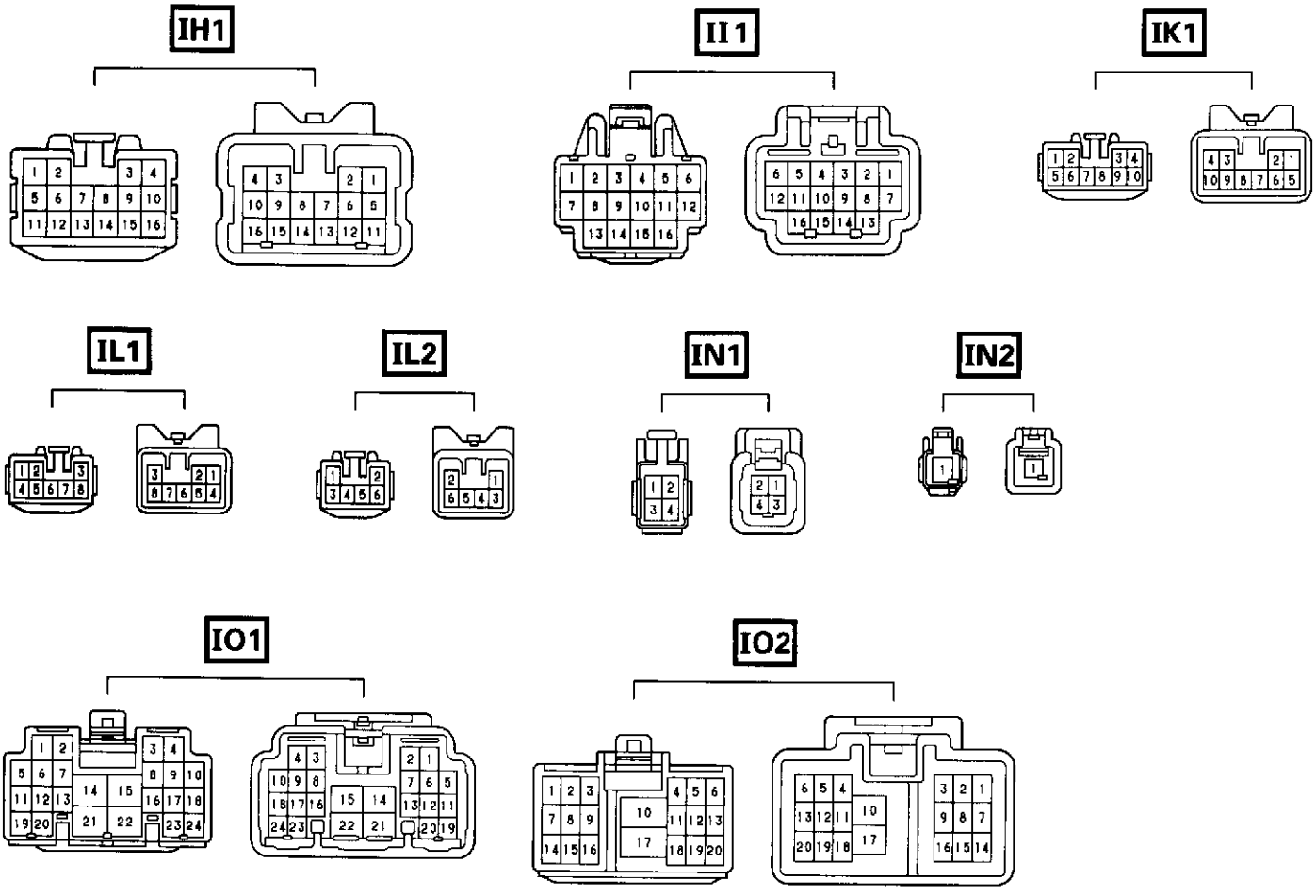

E ELECTRICAL WIRING ROUTING

□ : Location of Connector Joining Wire Harness and Wire Harness
▽ : Location of Ground Points

[RHD: Hardtop and Canvas Top]

English

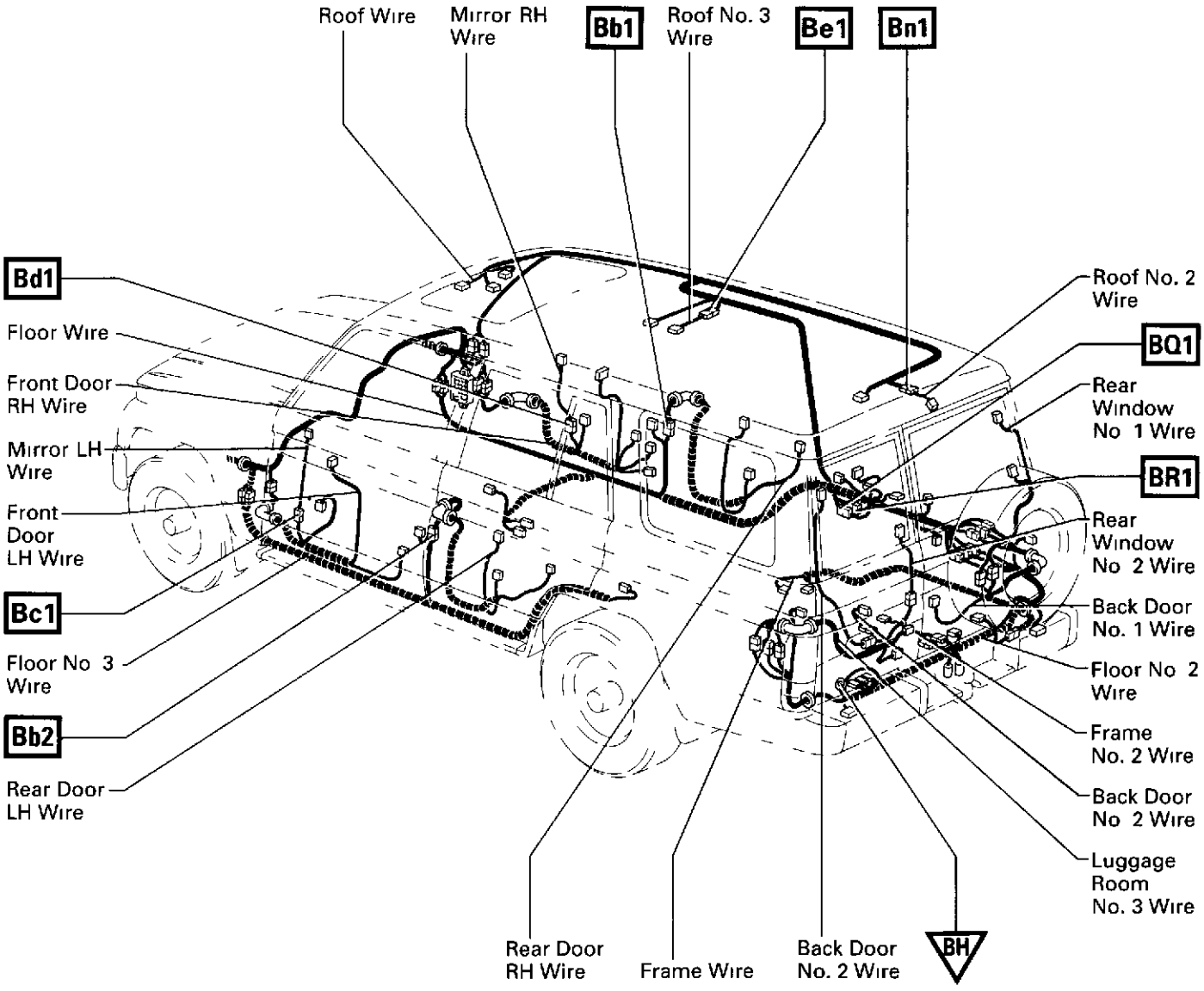

Connector Joining Wire Harness and Wire Harness

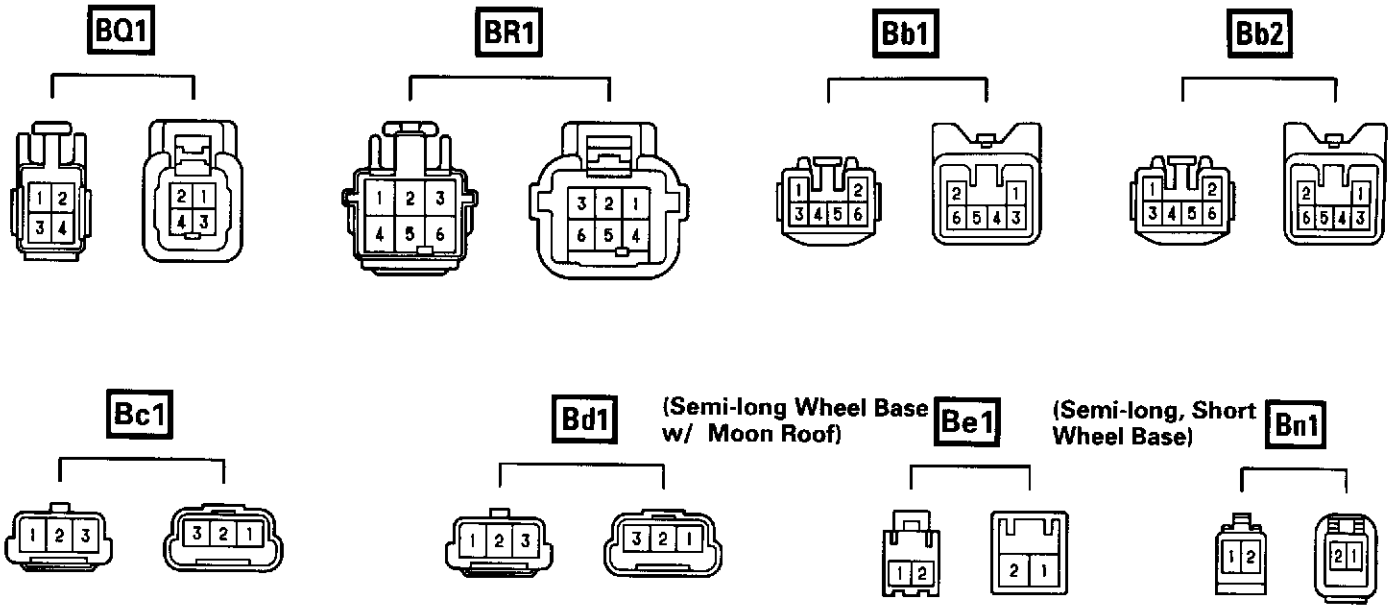

E ELECTRICAL WIRING ROUTING

□ : Location of Connector Joining Wire Harness and Wire Harness
▽ : Location of Ground Points

[RHD: Hardtop and Canvas Top]

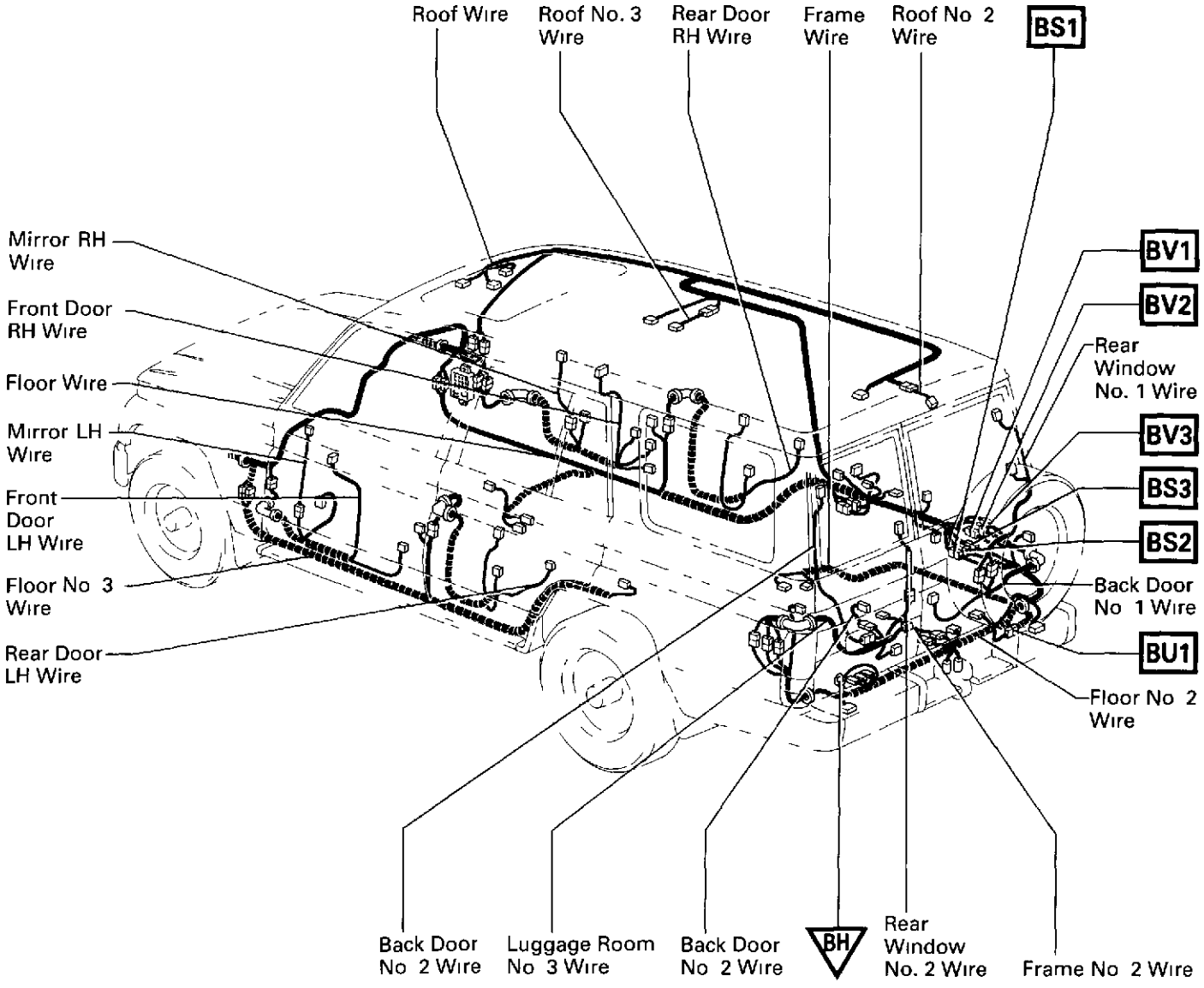

Connector Joining Wire Harness and Wire Harness

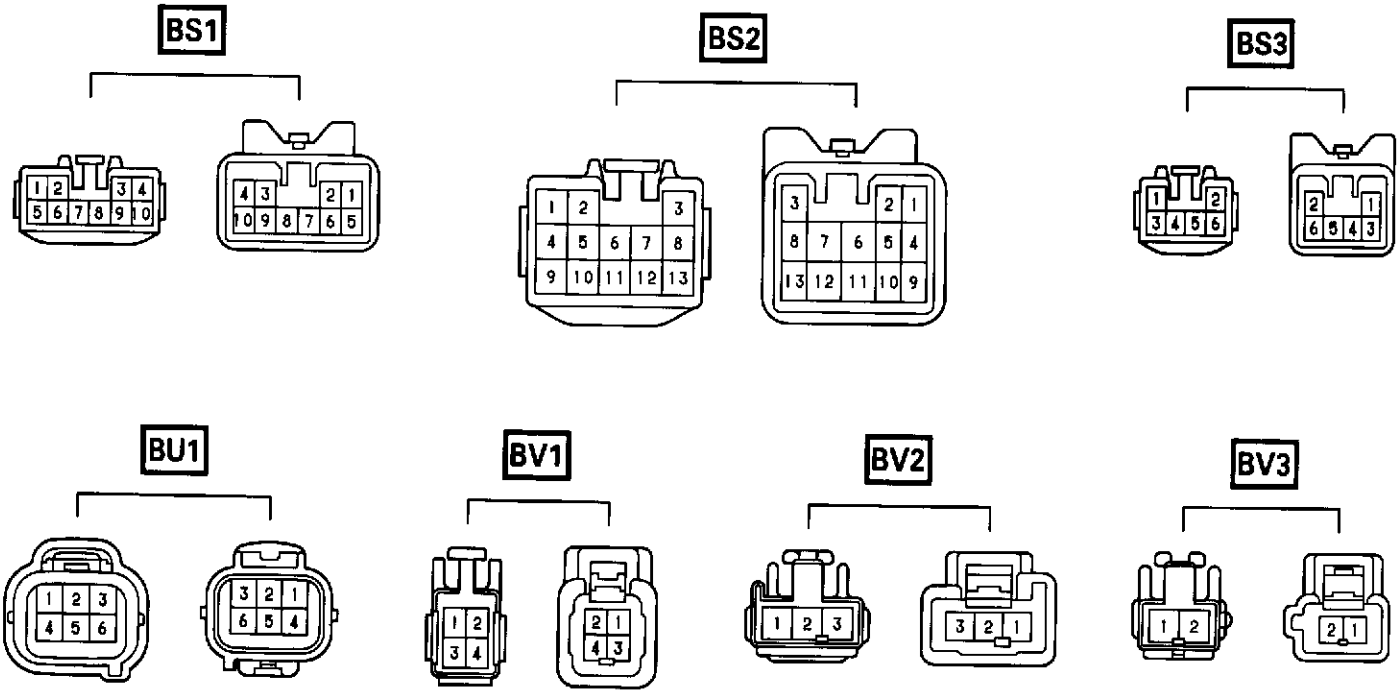

E ELECTRICAL WIRING ROUTING

□ : Location of Connector Joining Wire Harness and Wire Harness

▽ : Location of Ground Points

[RHD: Hardtop and Canvas Top]

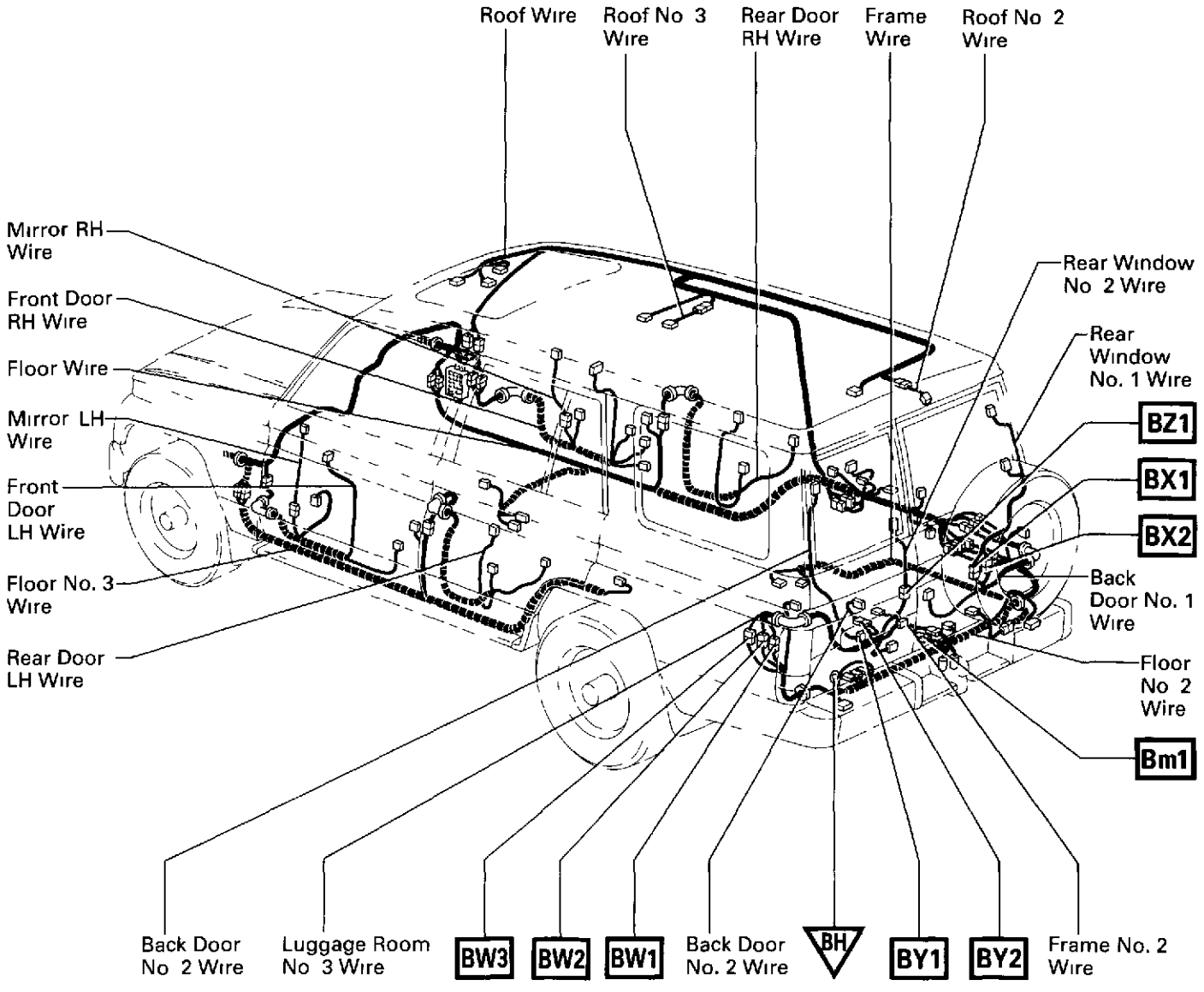

Connector Joining Wire Harness and Wire Harness

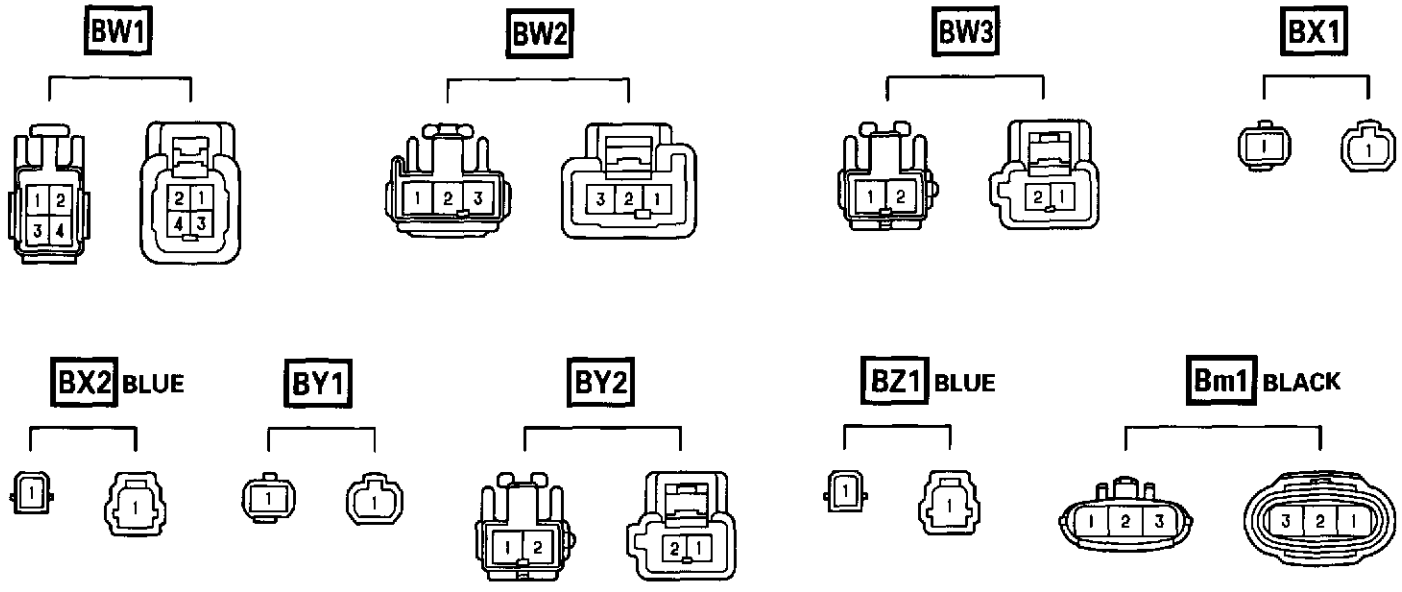

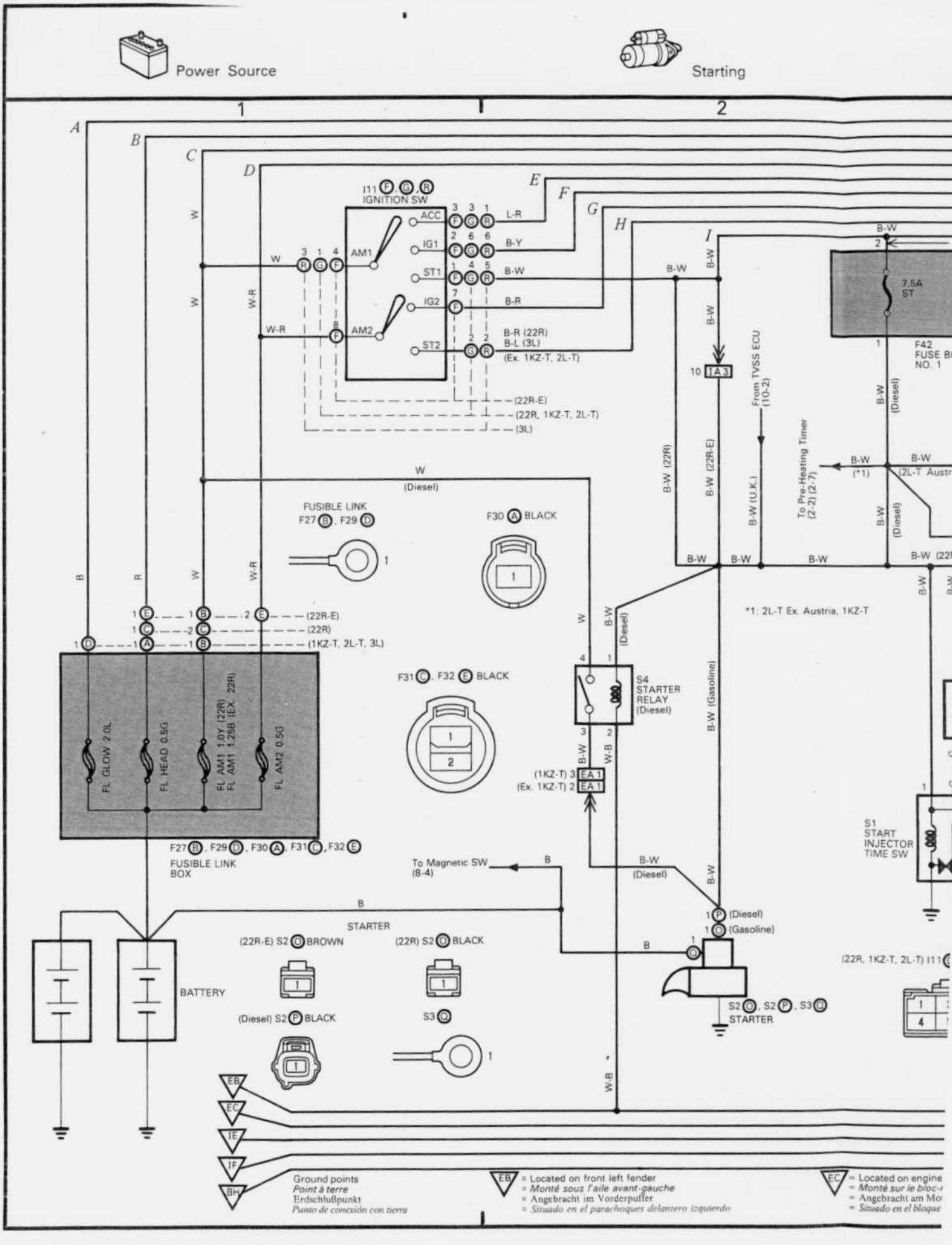
Power Source
Starting
1
2
A
B
C
D
E
F
G
H
I
I11 F, G, R
IGNITION SW
ACC
IG1
ST1
IG2
ST2
AM1
AM2
L-R
B-Y
B-W
B-R
B-R (22R)
B-L (3L)
(Ex. 1KZ-T, 2L-T)
(22R-E)
(22R, 1KZ-T, 2L-T)
(3L)
W
W-R
B-W
B-W (22R)
B-W (22R-E)
B-W (U.K.)
From TVSS ECU (10-2)
To Pre-Heating Timer (2-2) (2-7)
(*1)
(2L-T Austria
7.5A ST
F42 FUSE BLOCK NO. 1
(Diesel)
*1: 2L-T Ex. Austria, 1KZ-T
FUSIBLE LINK
F27 B, F29 D
F30 A BLACK
F31 C, F32 E BLACK
FL GLOW 2.0L
FL HEAD 0.5G
FL AM1 1.0Y (22R)
FL AM1 1.25B (EX. 22R)
FL AM2 0.5G
F27 B, F29 D, F30 A, F31 C, F32 E
FUSIBLE LINK BOX
S4 STARTER RELAY (Diesel)
(1KZ-T) 3 EA1
(Ex. 1KZ-T) 2 EA1
To Magnetic SW (8-4)
S1 START INJECTOR TIME SW
STARTER
(22R-E) S2 O BROWN
(22R) S2 O BLACK
(Diesel) S2 P BLACK
S3 Q
S2 O, S2 P, S3 Q
STARTER
(22R, 1KZ-T, 2L-T) I11
BATTERY
EB
EC
IE
IF
BH
Ground points
Point à terre
Erdschlußpunkt
Punto de conexión con tierra
EB = Located on front left fender
= Monté sous l'aile avant-gauche
= Angebracht im Vorderpuffer
= Situado en el parachoques delantero izquierdo
EC = Located on engine
= Monté sur le bloc-
= Angebracht am Mo
= Situado en el bloque

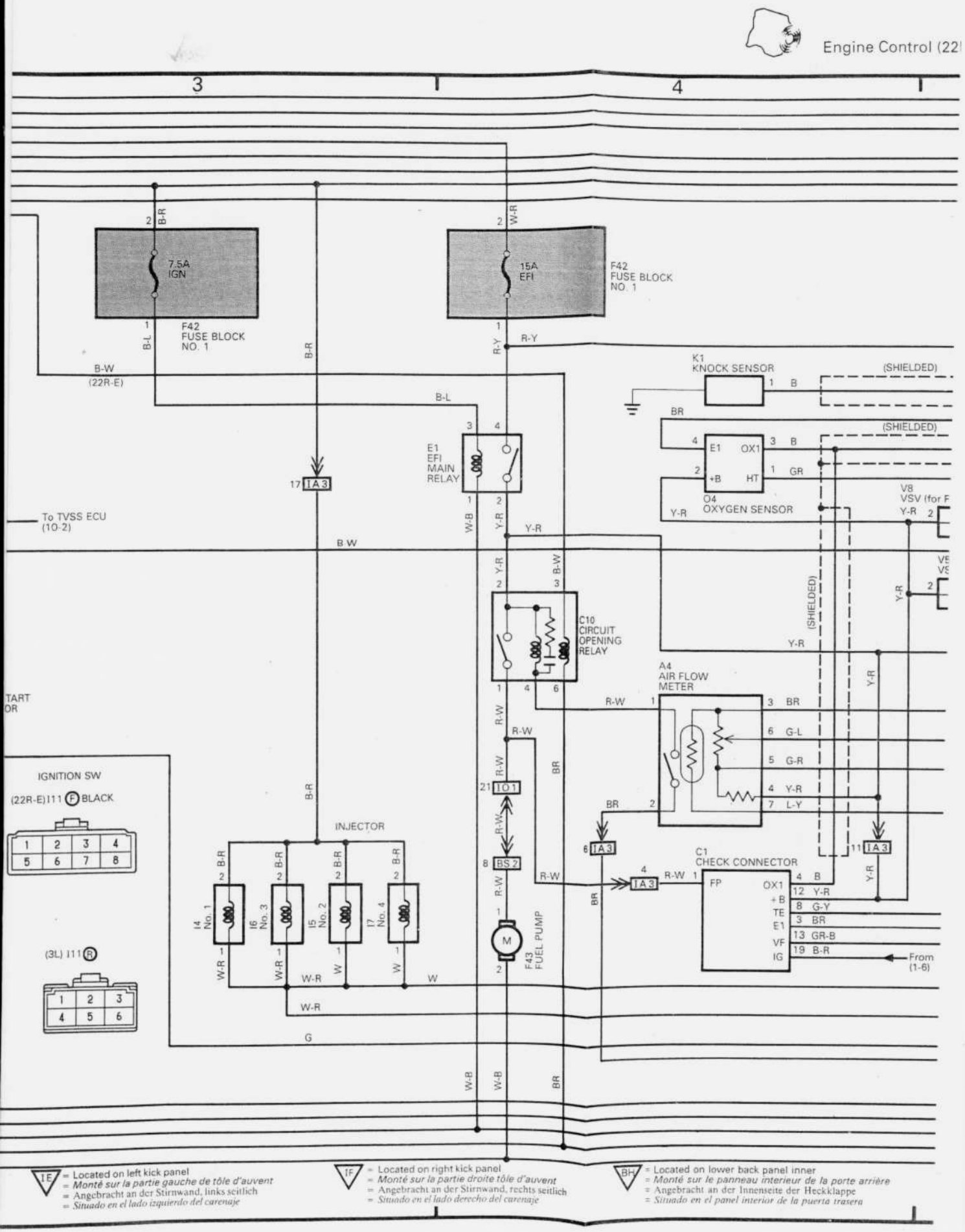

1E = Located on left kick panel
= *Monté sur la partie gauche de tôle d'auvent*
= Angebracht an der Stirnwand, links seitlich
= *Situado en el lado izquierdo del carenaje*

1F = Located on right kick panel
= *Monté sur la partie droite tôle d'auvent*
= Angebracht an der Stirnwand, rechts seitlich
= *Situado en el lado derecho del carenaje*

BH = Located on lower back panel inner
= *Monté sur le panneau interieur de la porte arrière*
= Angebracht an der Innenseite der Heckklappe
= *Situado en el panel interior de la puerta trasera*

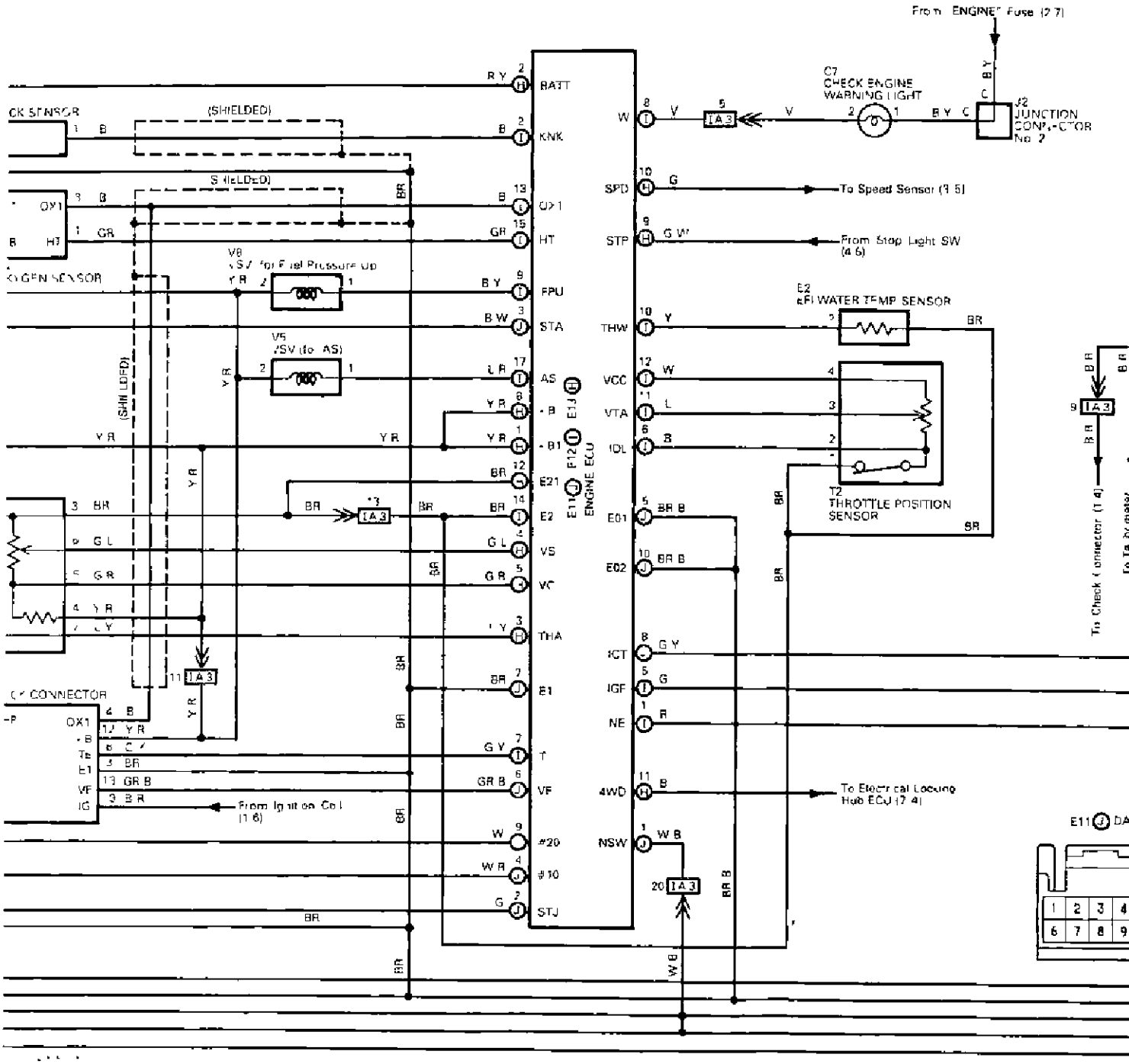
From "ENGINE" Fuse (2 7)
C7
CHECK ENGINE
WARNING LIGHT
J2
JUNCTION
CONNECTOR
No 2
To Speed Sensor (9 5)
From Stop Light SW
(4 6)
E2
EFI WATER TEMP SENSOR
T2
THROTTLE POSITION
SENSOR
To Check Connector (1 4)
To Electrical Locking
Hub ECU (7 4)
From Ignition Coil
(1 6)
(SHIELDED)
BATT
KNK
OX1
HT
FPU
STA
AS
THA
E1
VF
#20
#10
STJ
E21
E2
VS
VC
SPD
STP
THW
VCC
VTA
IDL
E01
E02
ICT
IGF
NE
4WD
NSW
ENGINE ECU

Ignition (22R-E)

Horn

Remote Control Mirror

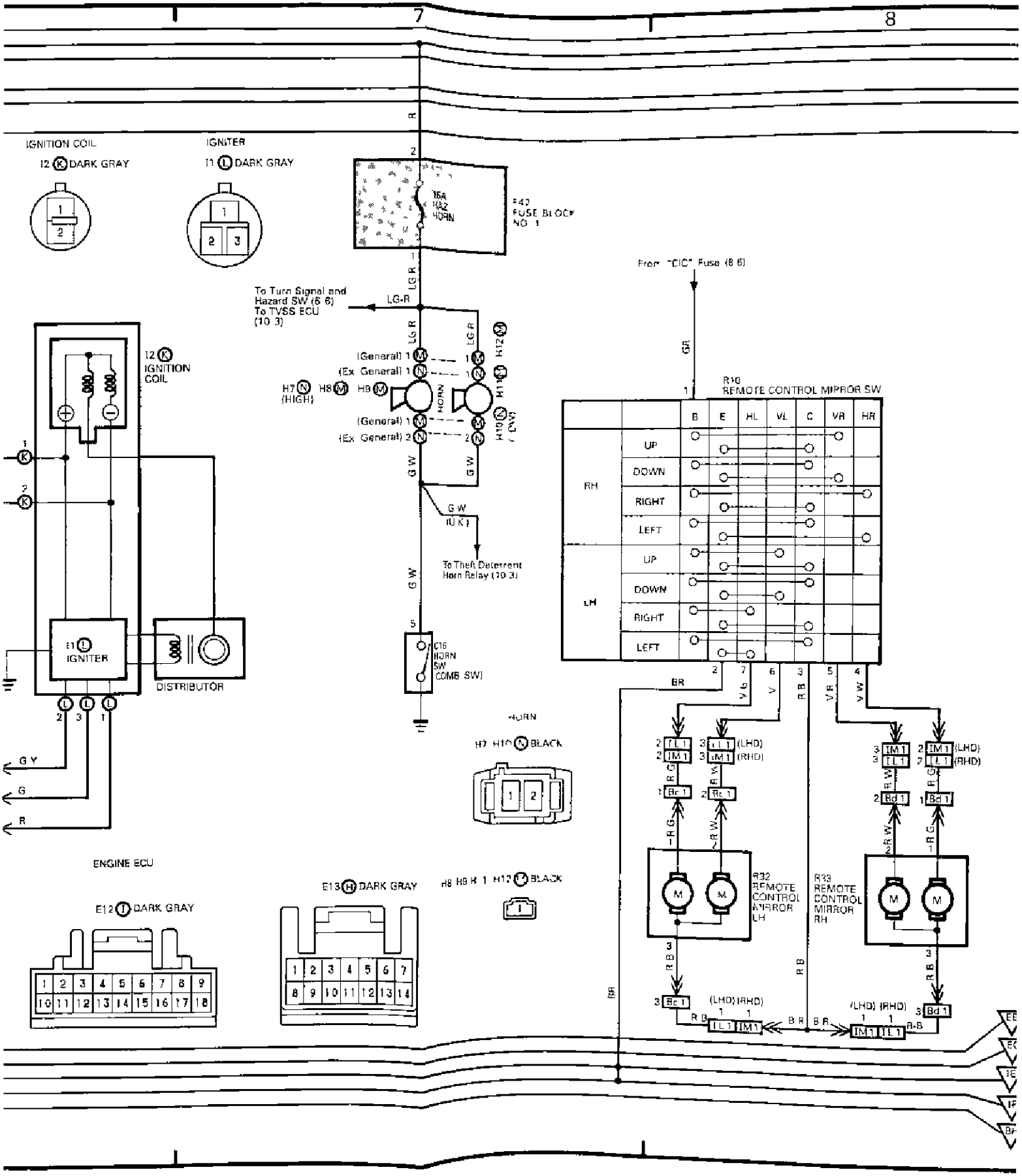

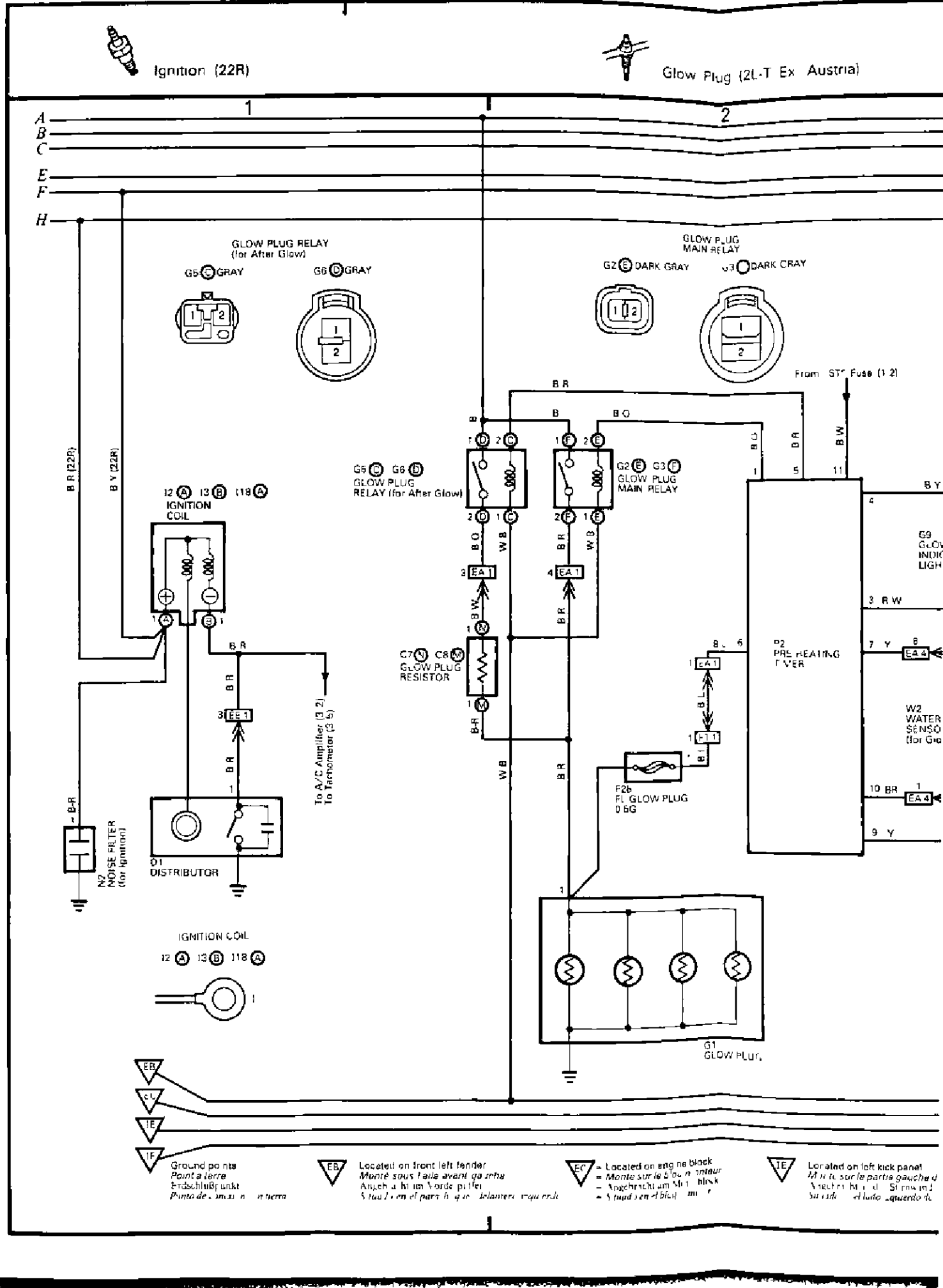
Ignition (22R)
Glow Plug (2L-T Ex Austria)
GLOW PLUG RELAY (for After Glow)
G5 GRAY
G6 GRAY
GLOW PLUG MAIN RELAY
G2 DARK GRAY
G3 DARK GRAY
From ST Fuse (1.2)
B R (22R)
B Y (22R)
I2 I3 I18
IGNITION COIL
G5 G6
GLOW PLUG RELAY (for After Glow)
G2 G3
GLOW PLUG MAIN RELAY
C7 C8
GLOW PLUG RESISTOR
To A/C Amplifier (3.2)
To Tachometer (3.6)
N2
NOISE FILTER (for Ignition)
D1
DISTRIBUTOR
F2b
FL GLOW PLUG 0.6G
P2
PRE-HEATING TIMER
W2
WATER SENSOR (for Gly
G1
GLOW PLUG
IGNITION COIL
I2 I3 I18
EB
EC
IE
IF
Ground points
Point a la terre
Erdschlußpunkt
Punto de masa a tierra
EB
Located on front left fender
Monté sous l'aile avant gauche
Anbei a. h. im Vorde pfei
Situ d'en el parafango delantero izquierdo
EC
= Located on engine block
= Monté sur le bloc moteur
= Angebracht am Motorblock
= Situado en el bloque motor
IE
Located on left kick panel
Monté sur le panneau de garniture gauche d
Anbei a. h. d. Seitenverkl
Situado en el panel izquierdo de

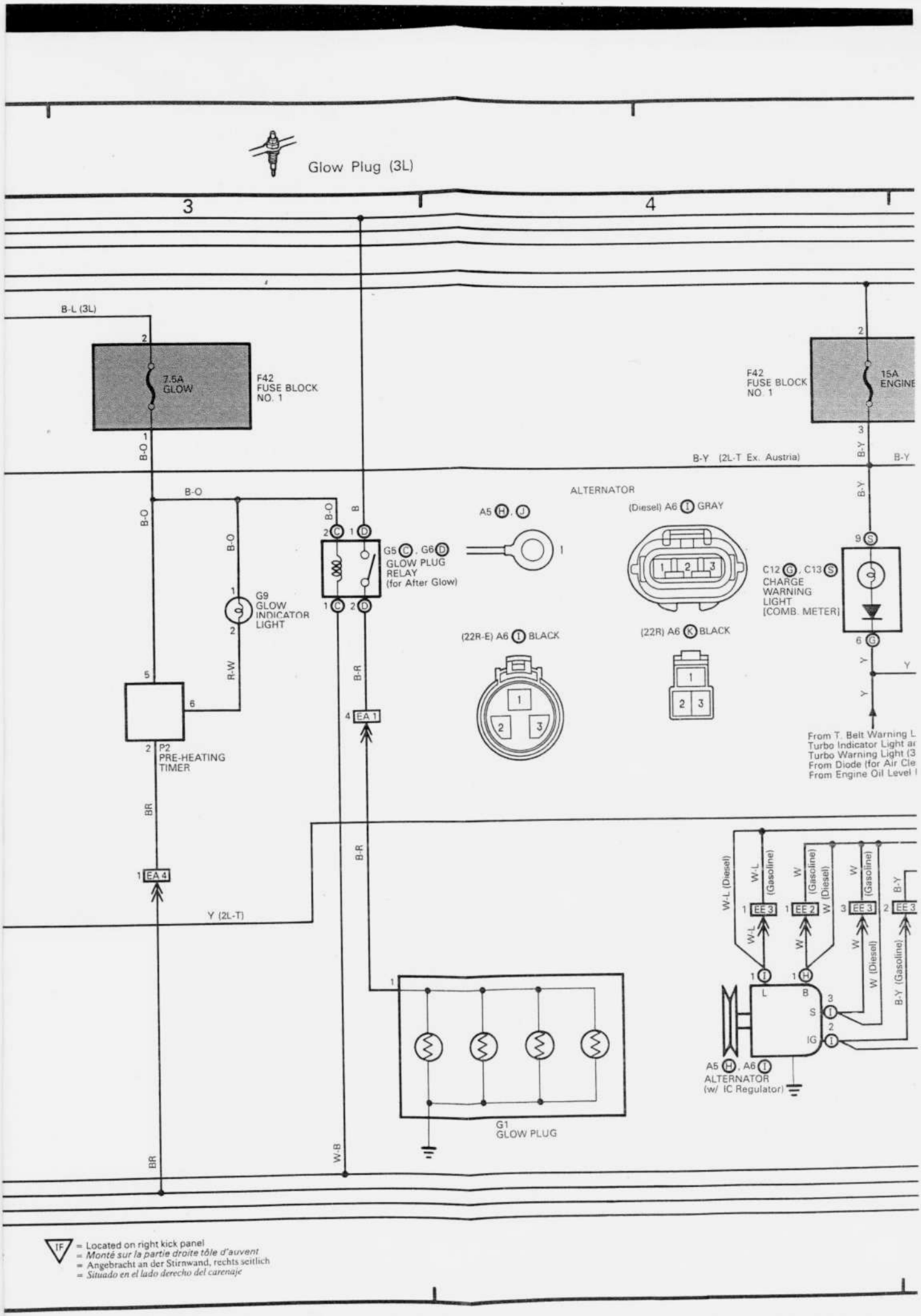
Glow Plug (3L)
3
4
B-L (3L)
7.5A
GLOW
F42
FUSE BLOCK
NO. 1
F42
FUSE BLOCK
NO. 1
15A
ENGINE
B-Y (2L-T Ex. Austria)
B-Y
B-O
B
G5 C , G6 D
GLOW PLUG
RELAY
(for After Glow)
G9
GLOW
INDICATOR
LIGHT
R-W
B-R
EA 1
EA 4
P2
PRE-HEATING
TIMER
BR
Y (2L-T)
W-B
ALTERNATOR
A5 H , J
(Diesel) A6 I GRAY
(22R-E) A6 I BLACK
(22R) A6 K BLACK
C12 G , C13 S
CHARGE
WARNING
LIGHT
(COMB. METER)
From T. Belt Warning L
Turbo Indicator Light ar
Turbo Warning Light (3
From Diode (for Air Cle
From Engine Oil Level
G1
GLOW PLUG
W-L (Diesel)
W-L (Gasoline)
W (Gasoline)
W (Diesel)
W (Gasoline)
B-Y
EE 3
EE 2
EE 3
EE 3
L
B
S
IG
W (Diesel)
B-Y (Gasoline)
A5 H , A6 I
ALTERNATOR
(w/ IC Regulator)
1F = Located on right kick panel
= Monté sur la partie droite tôle d'auvent
= Angebracht an der Stirnwand, rechts seitlich
= Situado en el lado derecho del carenaje

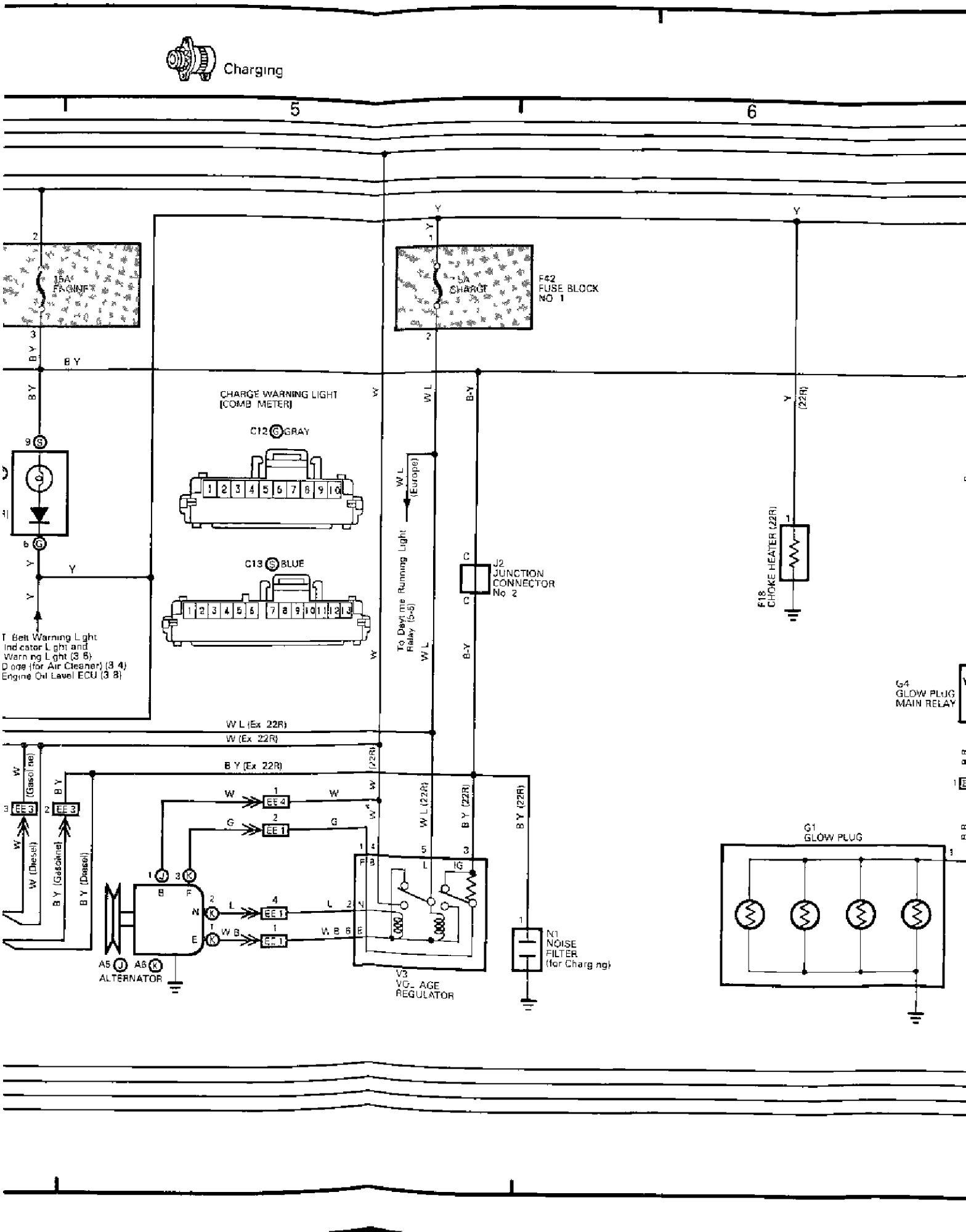

Charging
5
6
15A ENGINE
15A CHARGE
F42 FUSE BLOCK NO 1
CHARGE WARNING LIGHT (COMB METER)
C12 GRAY
C13 BLUE
To Daytime Running Light Relay (5-6)
J2 JUNCTION CONNECTOR No 2
F18 CHOKE HEATER (22R)
G4 GLOW PLUG MAIN RELAY
G1 GLOW PLUG
N1 NOISE FILTER (for Charging)
V3 VOLTAGE REGULATOR
A5 A6 ALTERNATOR
W L (Ex 22R)
W (Ex 22R)
B Y (Ex 22R)
W (Diesel)
B Y (Gasoline)
B Y (Diesel)

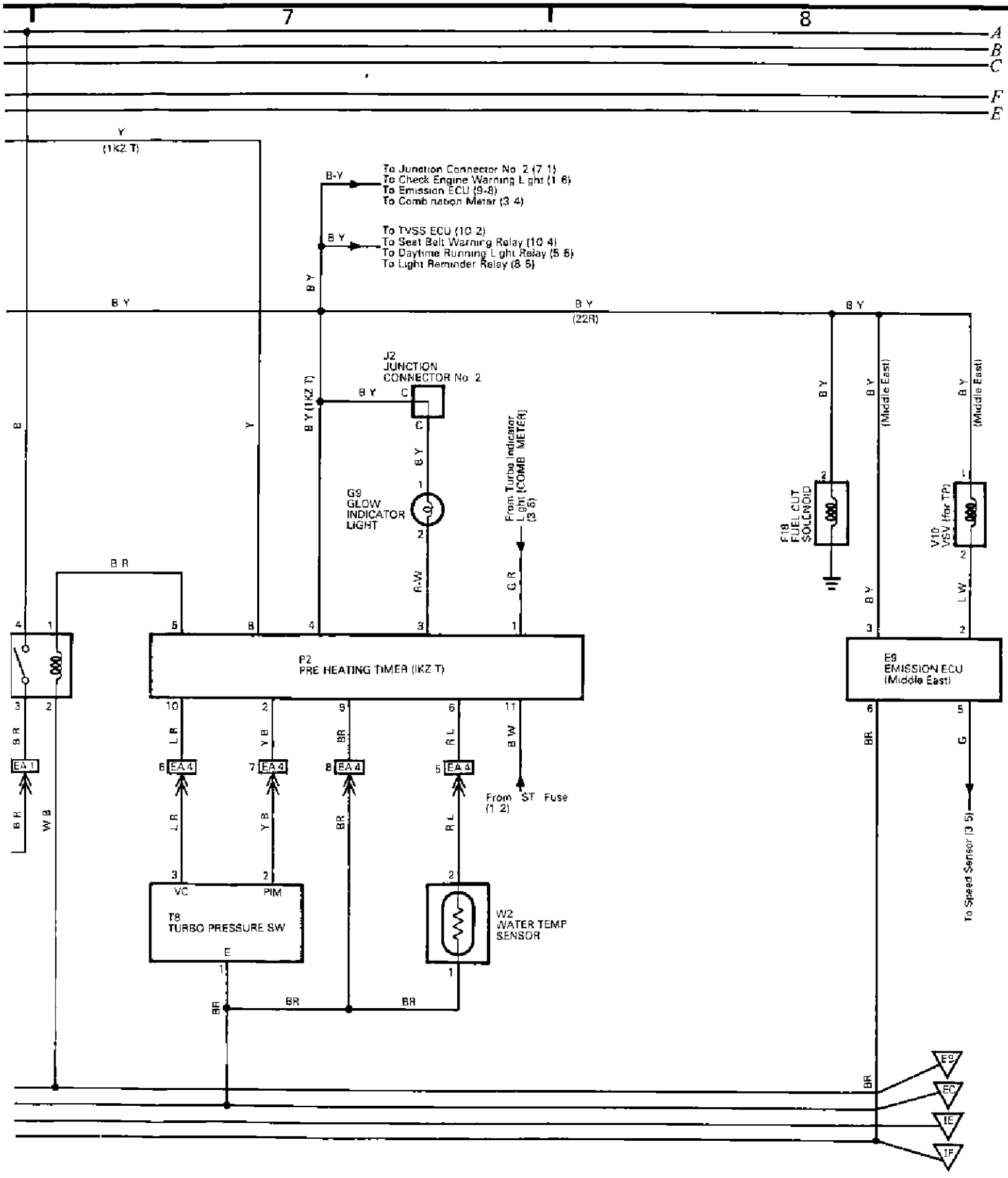
7
8
A
B
C
F
E
Y
(1kZ T)
B-Y
To Junction Connector No 2 (7 1)
To Check Engine Warning Light (1 6)
To Emission ECU (9-8)
To Combination Meter (3 4)
B Y
To TVSS ECU (10 2)
To Seat Belt Warning Relay (10 4)
To Daytime Running Light Relay (5 6)
To Light Reminder Relay (8 5)
B Y
B Y
B Y (22R)
B Y
J2
JUNCTION
CONNECTOR No 2
B Y (1KZ T)
B Y C
C
B Y
1
2
G9
GLOW
INDICATOR
LIGHT
R-W
From Turbo Indicator
Light (COMB METER)
(3 6)
G R
B R
B
Y
F18
FUEL CUT
SOLENOID
B Y
B Y
(Middle East)
B Y
B Y
(Middle East)
V10
VSV (for TP)
L W
B Y
P2
PRE HEATING TIMER (1KZ T)
E9
EMISSION ECU
(Middle East)
EA 1
EA 4
EA 4
EA 4
EA 4
L R
Y B
BR
R L
B W
From ST Fuse
(1 2)
B R
W B
L R
Y B
BR
R L
VC
PIM
T8
TURBO PRESSURE SW
E
W2
WATER TEMP
SENSOR
BR
BR
BR
BR
G
To Speed Sensor (3 5)
E2
EC
IE
IF

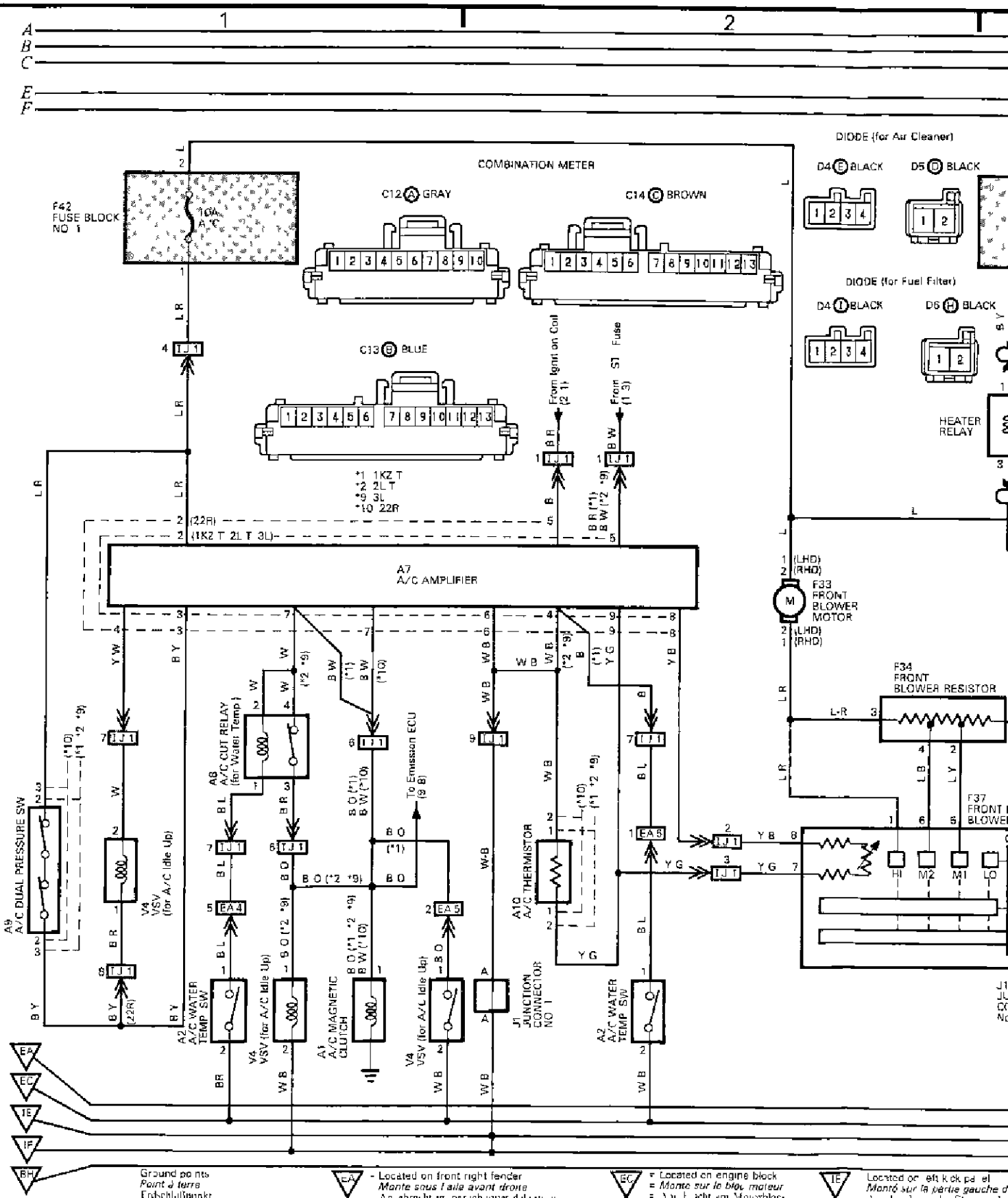

Ground points
Point à terre
Erdschlußpunkt

EA - Located on front right fender
Monté sous l'aile avant droite
Angebracht an Radhausschale vorn rechts

EC = Located on engine block
= Monté sur le bloc moteur
= Angebracht am Motorblock
= Situé sur le bloc moteur

IE Located on left kick panel
Monté sur la partie gauche du
Angebracht an der Stirnwand
Situé sur le tablier gauche

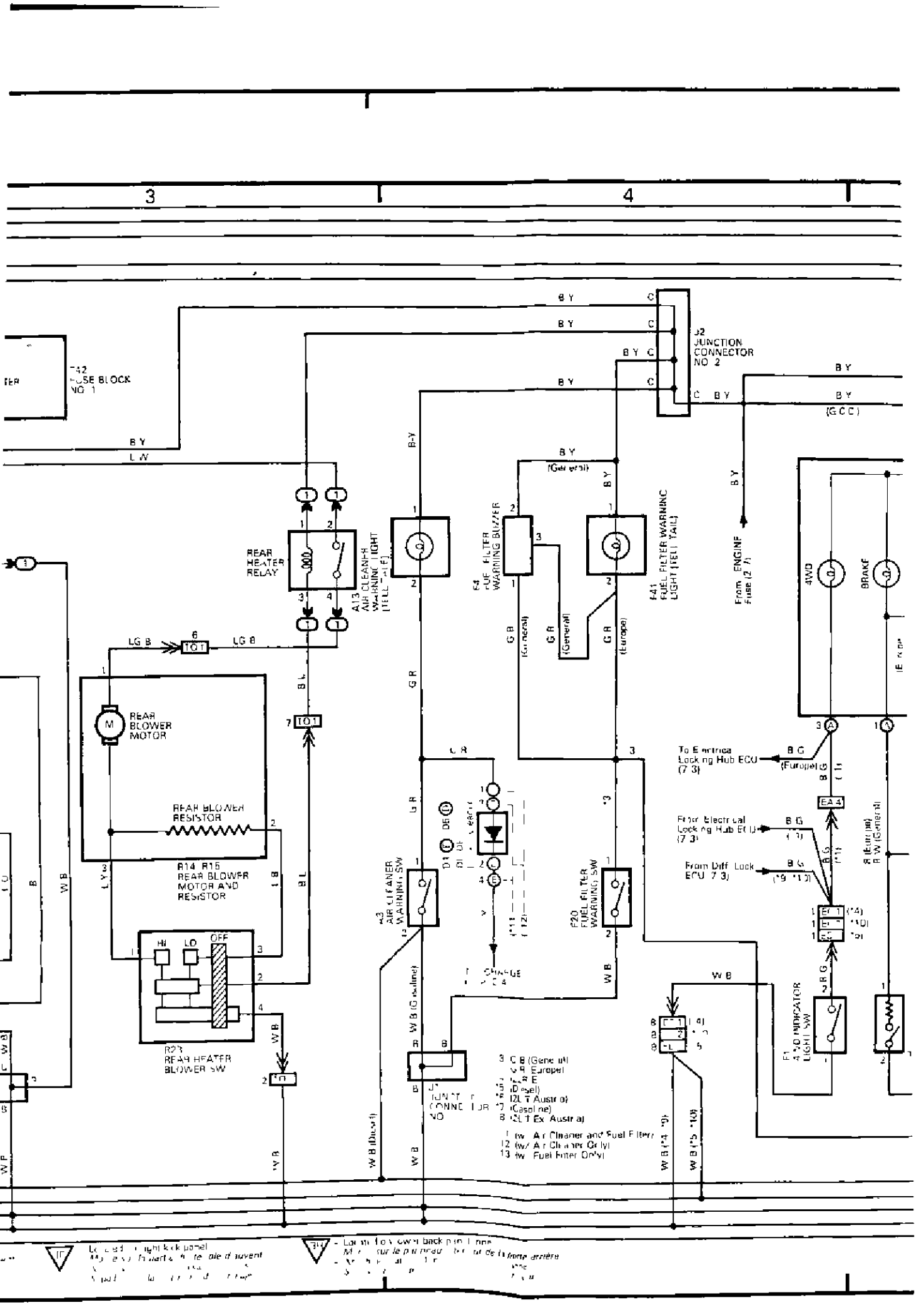

3
4
J2
JUNCTION
CONNECTOR
NO 2
F42
FUSE BLOCK
NO 1
REAR
HEATER
RELAY
A13
AIR CLEANER
WARNING LIGHT
(TELL TALE)
F4
FUEL FILTER
WARNING BUZZER
F41
FUEL FILTER WARNING
LIGHT (TELL TAIL)
From ENGINE
Fuse (2 7)
4WD
BRAKE
REAR
BLOWER
MOTOR
REAR BLOWER
RESISTOR
R14 R15
REAR BLOWER
MOTOR AND
RESISTOR
HI
LO
OFF
R23
REAR HEATER
BLOWER SW
A3
AIR CLEANER
WARNING SW
F20
FUEL FILTER
WARNING SW
To Electrical
Locking Hub ECU
(7 3)
From Electrical
Locking Hub ECU
(7 3)
From Diff Lock
ECU 7 3)
F1
4WD INDICATOR
LIGHT SW
3 C B (General)
V R (Europe)
(Diesel)
(2LT Austria)
(Gasoline)
(2LT Ex Austria)
1 (w/ Air Cleaner and Fuel Filter)
12 (w/ Air Cleaner Only)
13 (w/ Fuel Filter Only)

Combination Meter

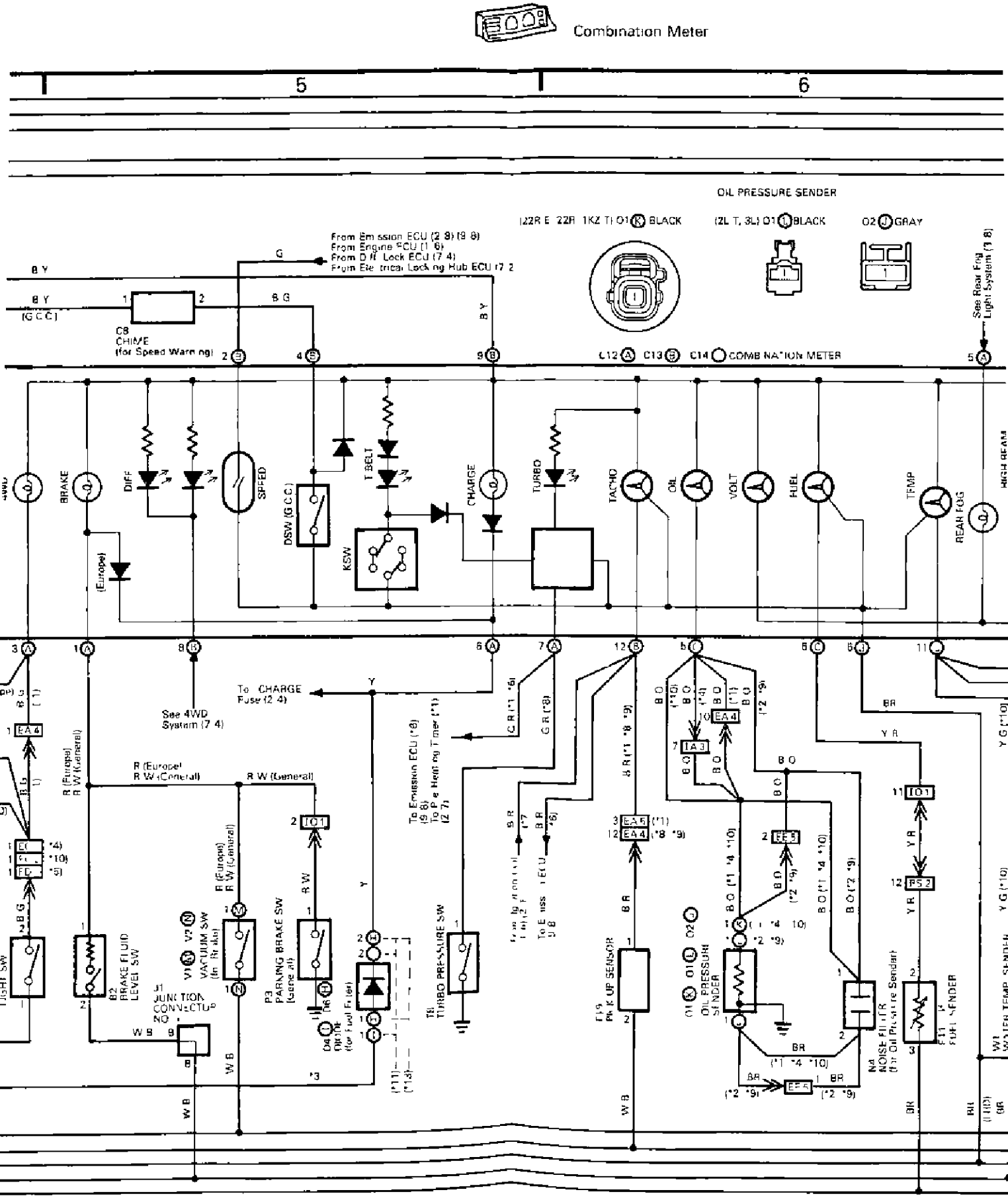

Rear Fog Light

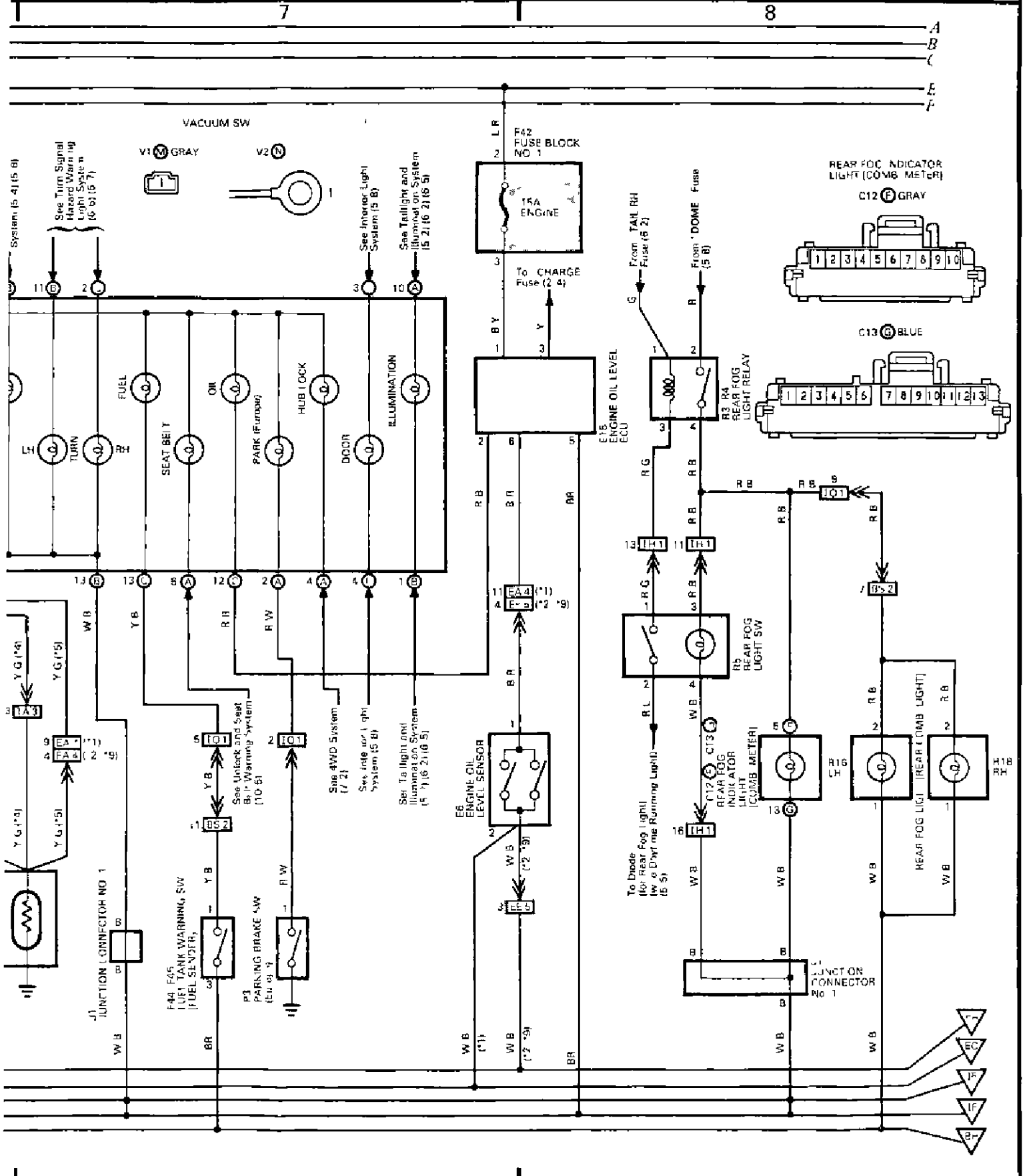

4 LAND CRUISER

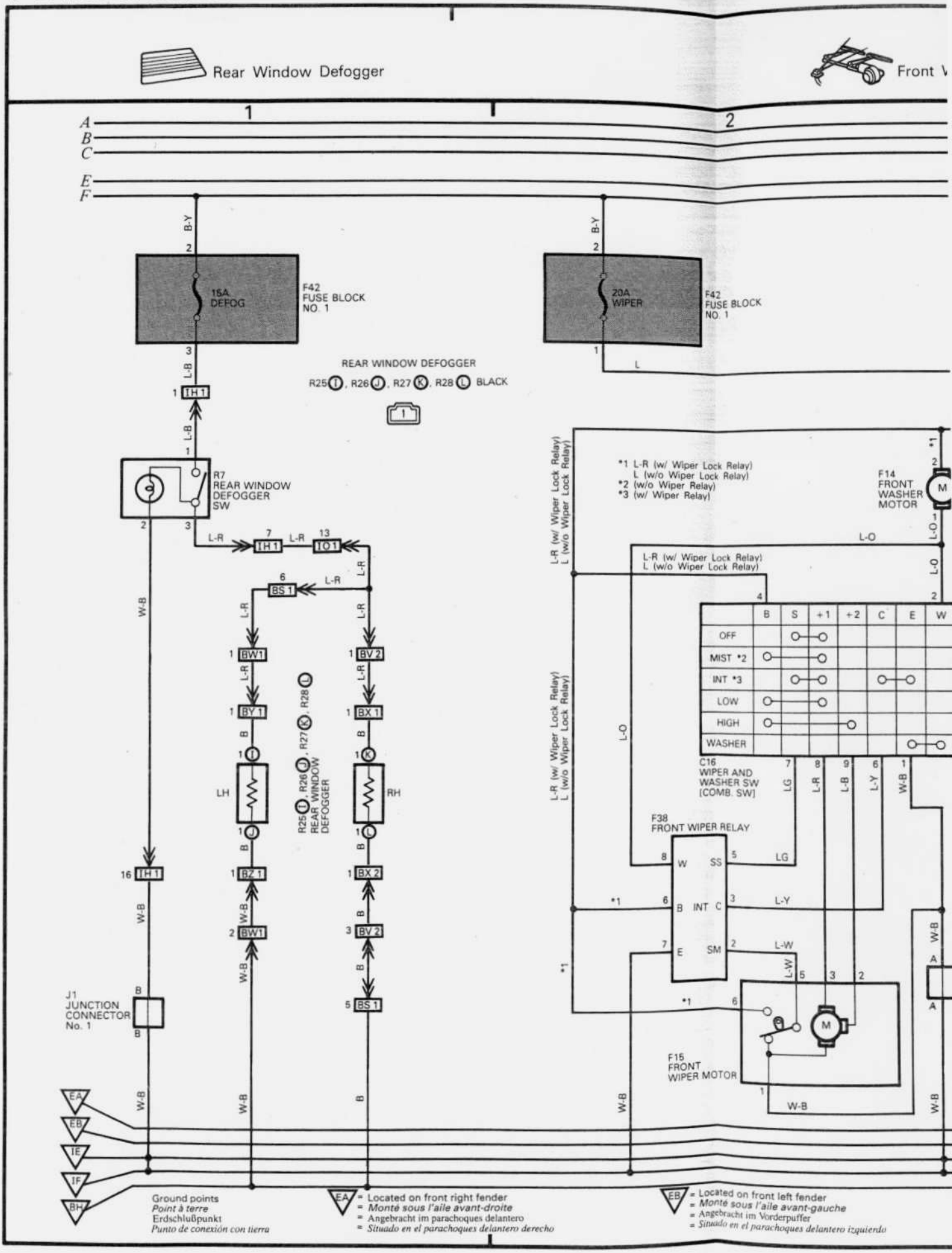

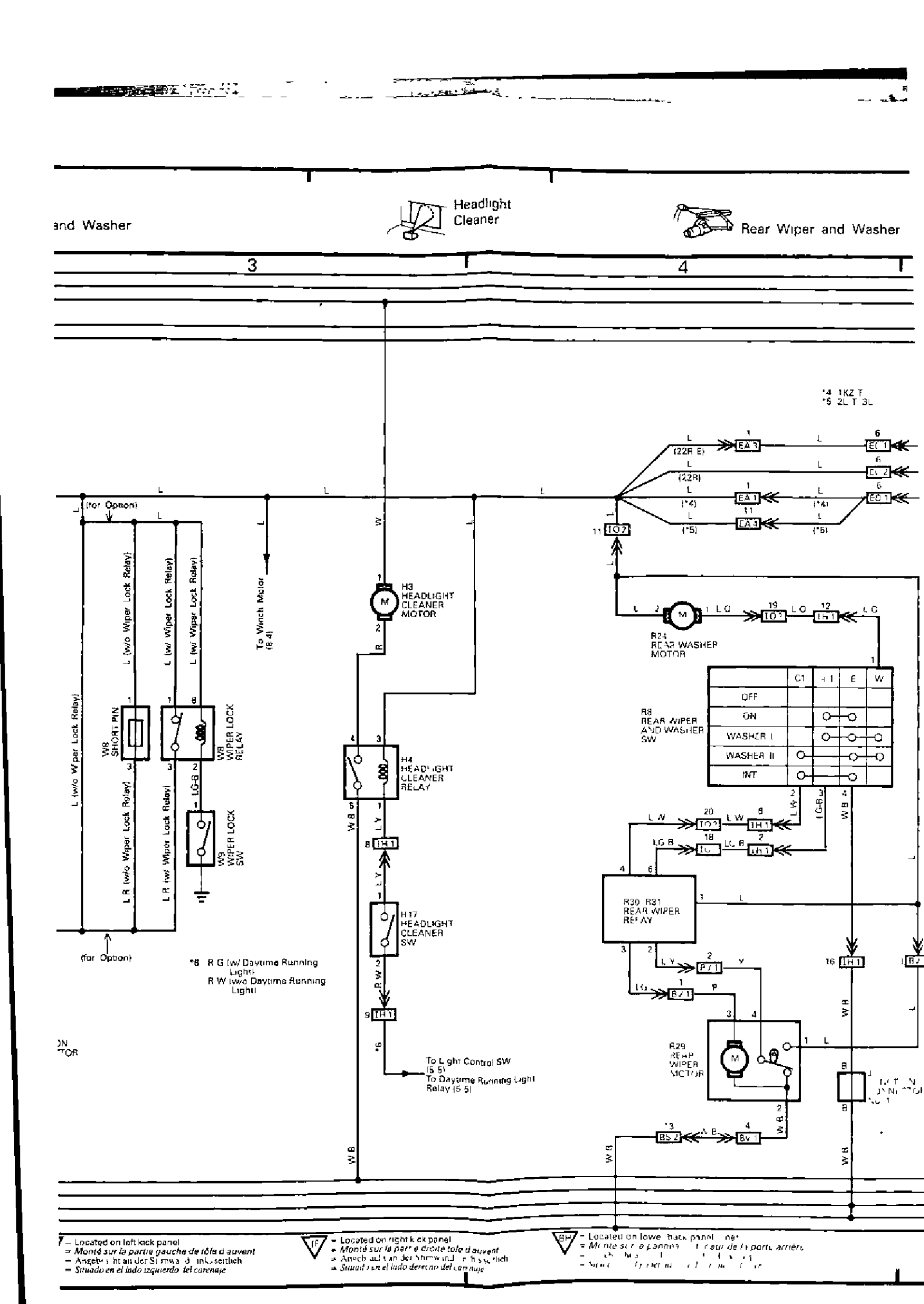

and Washer
Headlight Cleaner
Rear Wiper and Washer
3
4
*4 1KZ T
*5 2L T 3L
(for Option)
L (w/o Wiper Lock Relay)
L (w/ Wiper Lock Relay)
L (w/ Wiper Lock Relay)
L R (w/o Wiper Lock Relay)
L R (w/ Wiper Lock Relay)
W8 SHORT PIN
W8 WIPER LOCK RELAY
W9 WIPER LOCK SW
To Winch Motor (8 4)
H3 HEADLIGHT CLEANER MOTOR
H4 HEADLIGHT CLEANER RELAY
H17 HEADLIGHT CLEANER SW
To Light Control SW (5 5)
To Daytime Running Light Relay (5 5)
*6 R G (w/ Daytime Running Light)
R W (w/o Daytime Running Light)
R24 REAR WASHER MOTOR
R8 REAR WIPER AND WASHER SW
OFF
ON
WASHER I
WASHER II
INT
R30 R31 REAR WIPER RELAY
R29 REAR WIPER MOTOR
(for Option)
– Located on left kick panel
= Monté sur la partie gauche de tôle d'auvent
= Angebracht an der Stirnwand links seitlich
= Situado en el lado izquierdo del carenaje
– Located on right kick panel
= Monté sur la partie droite tôle d'auvent
= Angebracht an der Stirnwand rechts seitlich
= Situado en el lado derecho del carenaje
– Located on lower back panel

Back-Up Light

Stop Light

5

6

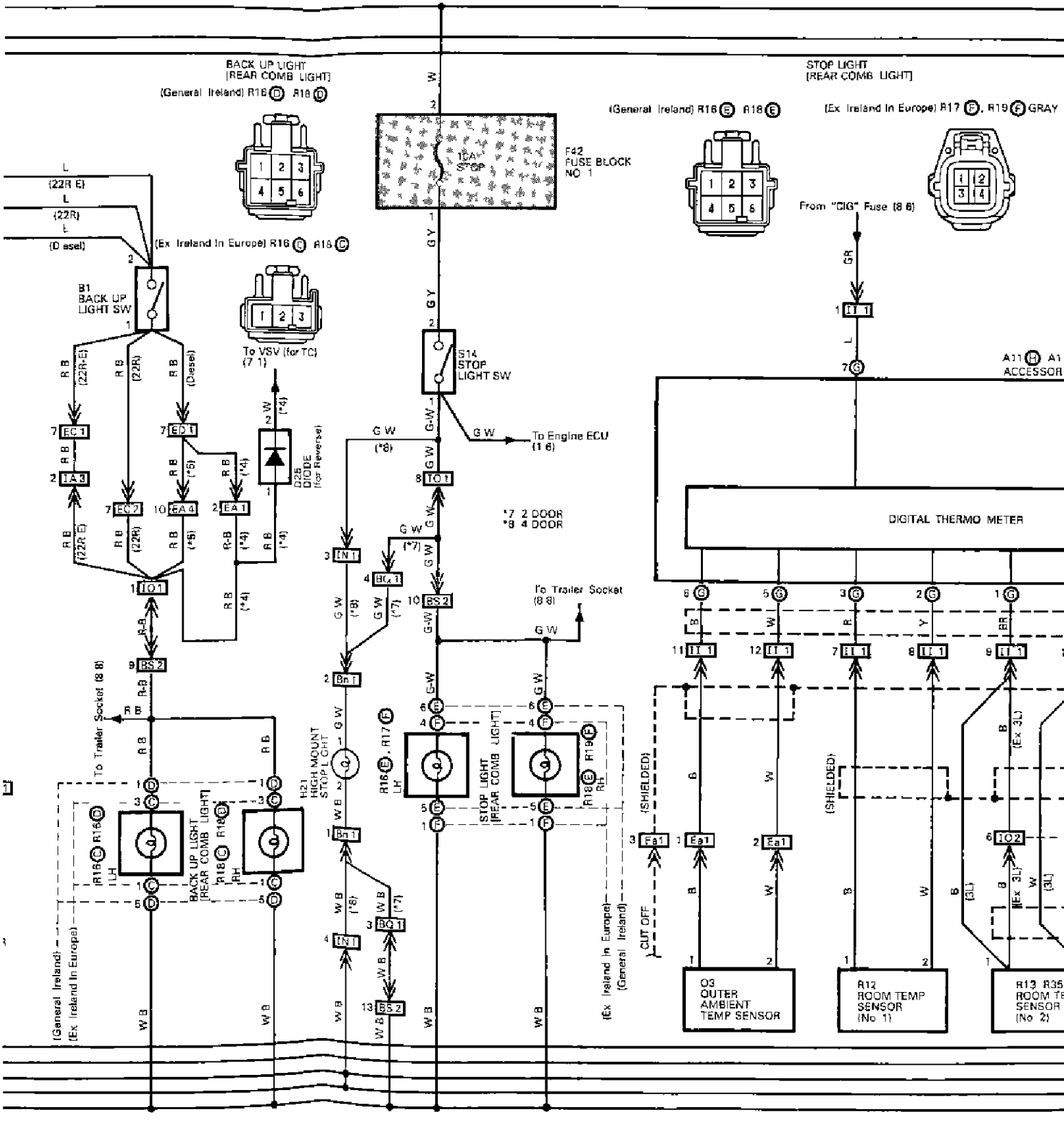

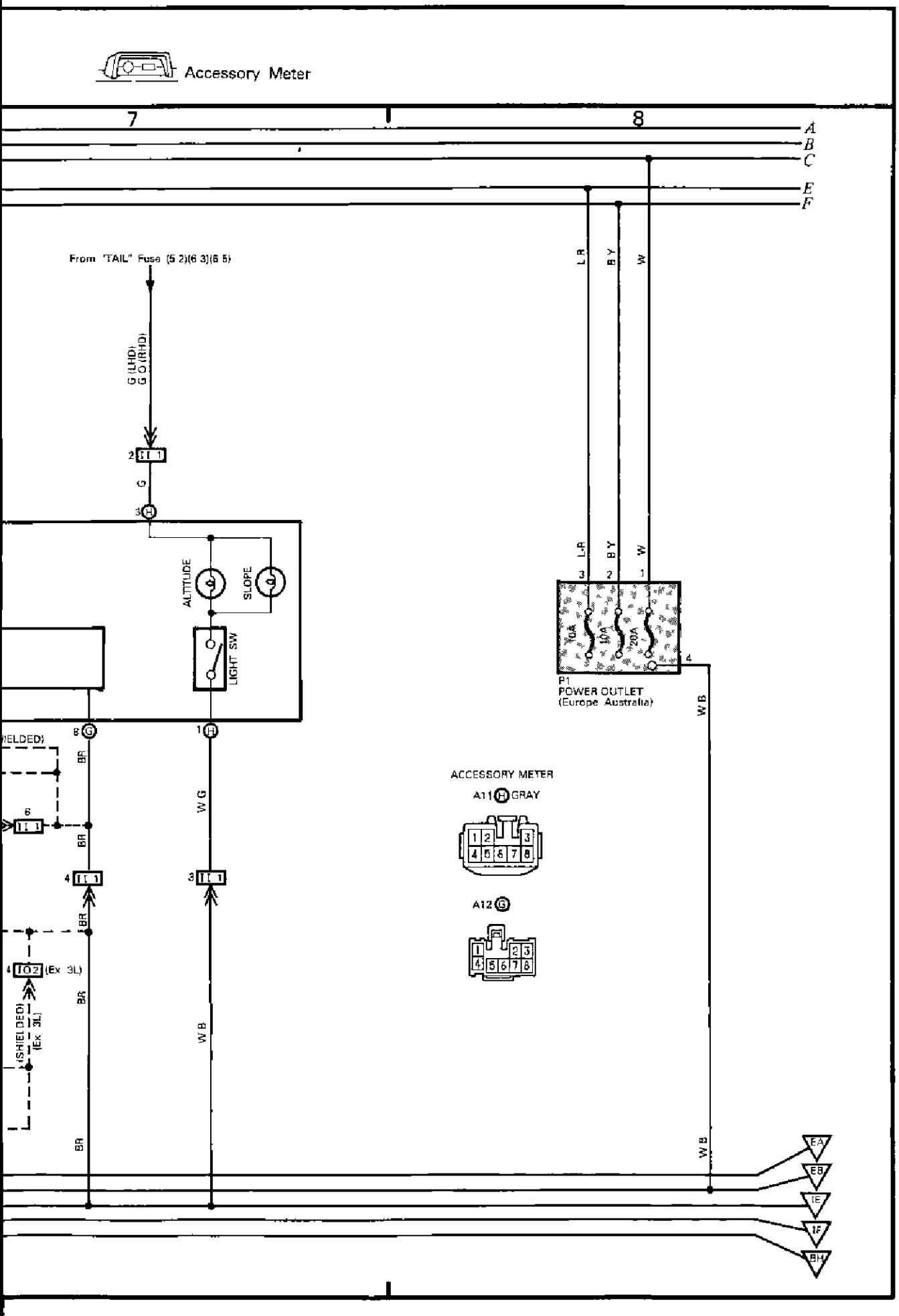
Accessory Meter
7
8
A
B
C
E
F
From "TAIL" Fuse (5.2)(6.3)(6.5)
G (LHD)
G O (RHD)
G
L-R
B Y
W
ALTITUDE
SLOPE
LIGHT SW
10A
10A
20A
P1
POWER OUTLET
(Europe Australia)
W B
ACCESSORY METER
A11 GRAY
A12
W G
BR
(Ex 3L)
(SHIELDED)
EA
EB
IE
IF
BH

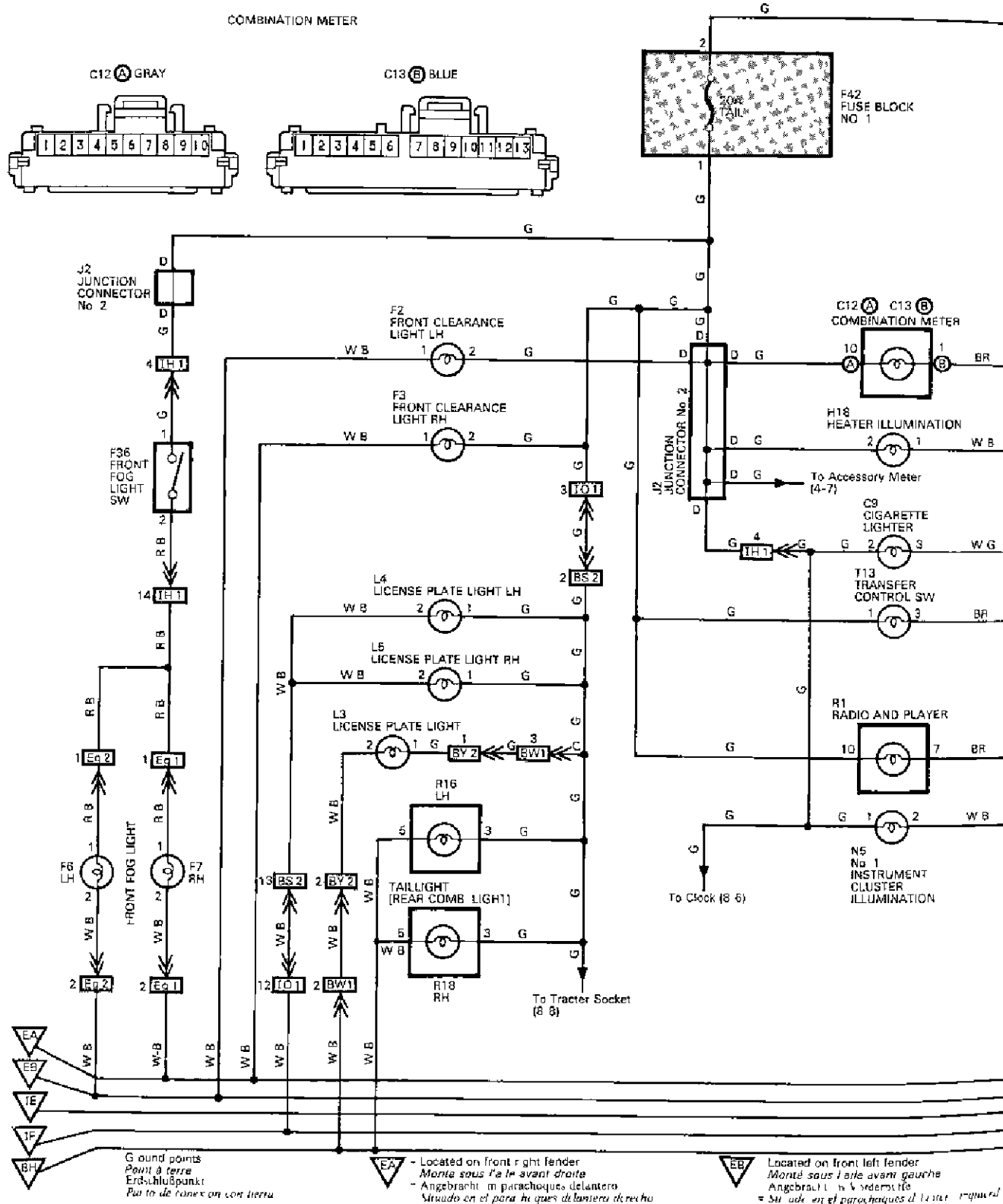
1
2
A
B
C
E
F
COMBINATION METER
C12 A GRAY
C13 B BLUE
F42
FUSE BLOCK
NO. 1
50A
TAIL
J2
JUNCTION
CONNECTOR
No. 2
F2
FRONT CLEARANCE
LIGHT LH
F3
FRONT CLEARANCE
LIGHT RH
F36
FRONT
FOG
LIGHT
SW
L4
LICENSE PLATE LIGHT LH
L5
LICENSE PLATE LIGHT RH
L3
LICENSE PLATE LIGHT
R16
LH
R18
RH
TAILLIGHT
[REAR COMB. LIGHT]
F6
LH
F7
RH
FRONT FOG LIGHT
C12 A C13 B
COMBINATION METER
R18
HEATER ILLUMINATION
To Accessory Meter
(4-7)
C9
CIGARETTE
LIGHTER
T13
TRANSFER
CONTROL SW
R1
RADIO AND PLAYER
To Clock (8-6)
N5
No. 1
INSTRUMENT
CLUSTER
ILLUMINATION
To Tracter Socket
(8-8)
EA
EB
IE
IF
BH
Ground points
Point à terre
Erd-Schlußpunkt
Punto de conexión con tierra
- Located on front right fender
Monté sous l'aile avant droite
- Angebracht im Kotflügel vorn rechts
situado en el parachoques delantero derecho
Located on front left fender
Monté sous l'aile avant gauche
Angebracht im Kotflügel vorn links
situado en el parachoques delantero izquierdo

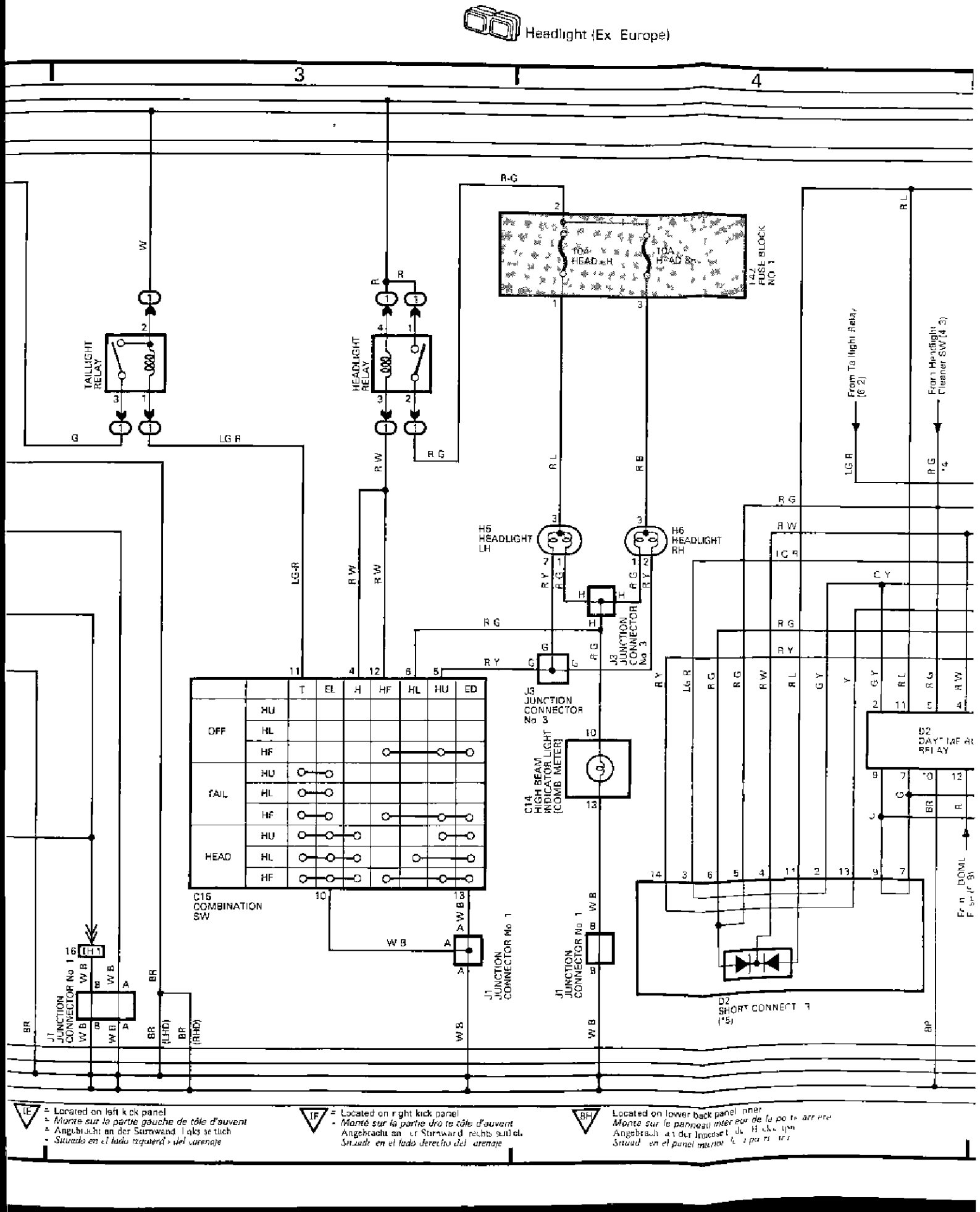

IE = Located on left kick panel
= Monté sur la partie gauche de tôle d'auvent
= Angebracht an der Stirnwand links seitlich
= Situado en el lado izquierdo del carenaje

IF = Located on right kick panel
= Monté sur la partie droite tôle d'auvent
Angebracht an der Stirnwand rechts seitlich
Situado en el lado derecho del carenaje

BH Located on lower back panel inner
Monté sur le panneau intérieur de la porte arrière
Angebracht an der Innenseite der Hecktür
Situado en el panel interior de la puerta trasera

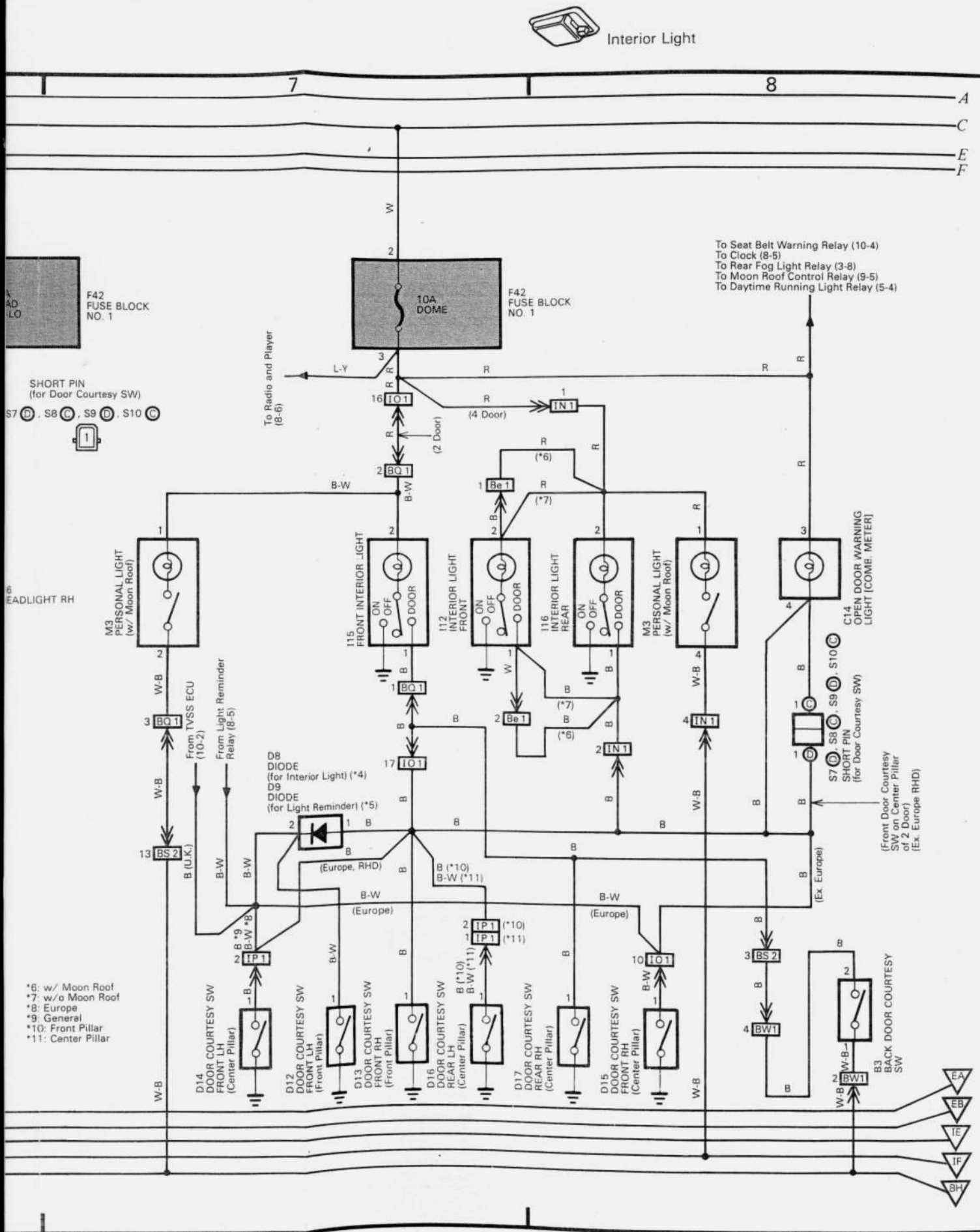
Interior Light
7
8
A
C
E
F
F42
FUSE BLOCK
NO. 1
10A
DOME
To Seat Belt Warning Relay (10-4)
To Clock (8-5)
To Rear Fog Light Relay (3-8)
To Moon Roof Control Relay (9-5)
To Daytime Running Light Relay (5-4)
To Radio and Player (8-6)
SHORT PIN
(for Door Courtesy SW)
S7 D , S8 C , S9 D , S10 C
(2 Door)
(4 Door)
(*6)
(*7)
M3
PERSONAL LIGHT
(w/ Moon Roof)
I15
FRONT INTERIOR LIGHT
I12
INTERIOR LIGHT
FRONT
I16
INTERIOR LIGHT
REAR
C14
OPEN DOOR WARNING
LIGHT [COMB. METER]
From TVSS ECU
(10-2)
From Light Reminder
Relay (8-5)
D8
DIODE
(for Interior Light) (*4)
D9
DIODE
(for Light Reminder) (*5)
(Europe, RHD)
(Europe)
(Ex. Europe)
(Front Door Courtesy
SW on Center Pillar
of 2 Door)
(Ex. Europe RHD)
*6: w/ Moon Roof
*7: w/o Moon Roof
*8: Europe
*9: General
*10: Front Pillar
*11: Center Pillar
D14
DOOR COURTESY SW
FRONT LH
(Center Pillar)
D12
DOOR COURTESY SW
FRONT LH
(Front Pillar)
D13
DOOR COURTESY SW
FRONT RH
(Front Pillar)
D16
DOOR COURTESY SW
REAR LH
(Center Pillar)
D17
DOOR COURTESY SW
REAR RH
(Center Pillar)
D15
DOOR COURTESY SW
FRONT RH
(Center Pillar)
B3
BACK DOOR COURTESY
SW
EA
EB
IE
IF
BH

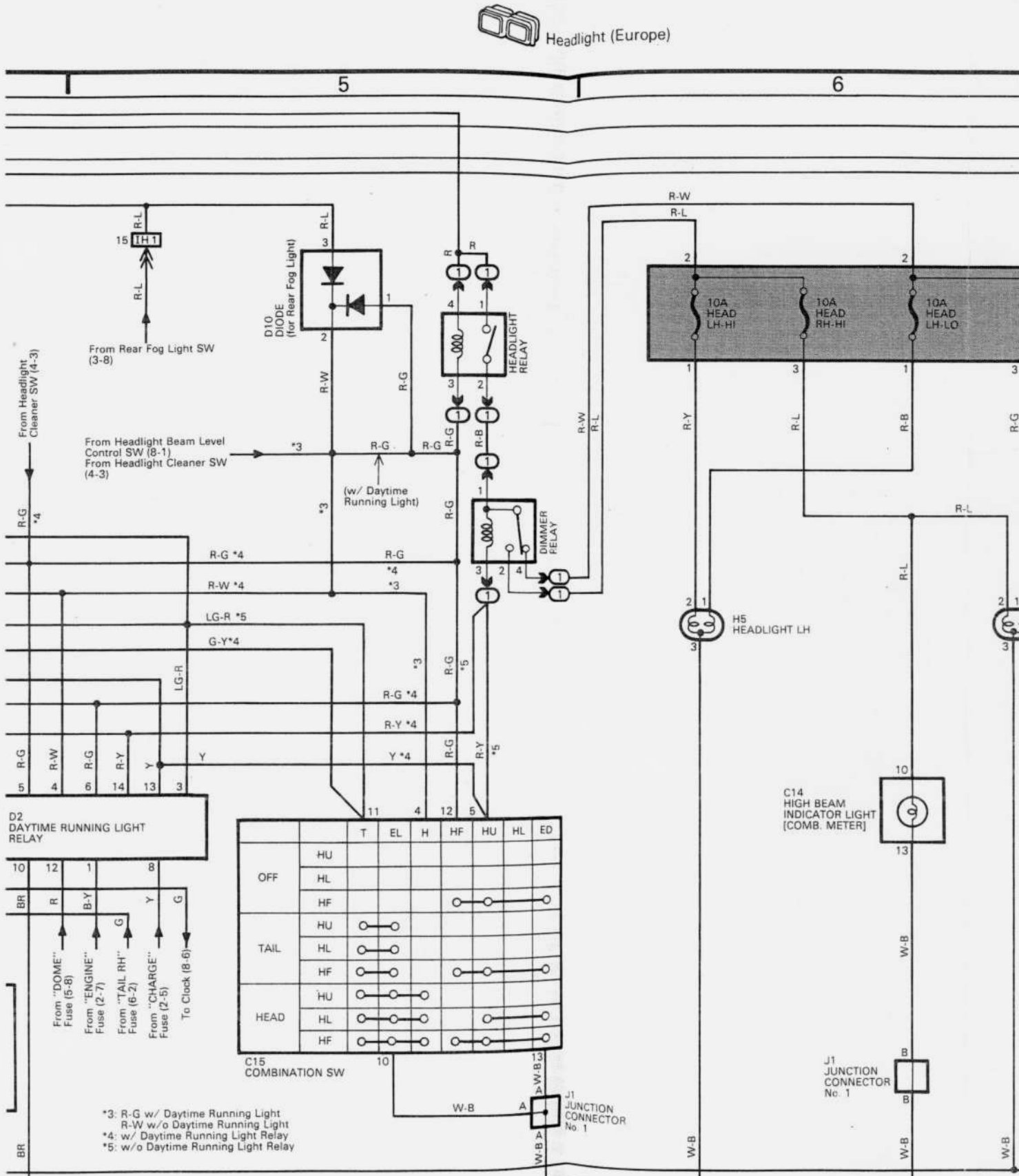
Headlight (Europe)
5
6
15
TH 1
R-L
From Rear Fog Light SW (3-8)
D10
DIODE
(for Rear Fog Light)
HEADLIGHT RELAY
From Headlight Cleaner SW (4-3)
From Headlight Beam Level Control SW (8-1)
From Headlight Cleaner SW (4-3)
(w/ Daytime Running Light)
DIMMER RELAY
R-W
R-L
R-G
R-B
R-Y
LG-R
G-Y
Y
10A HEAD LH-HI
10A HEAD RH-HI
10A HEAD LH-LO
H5
HEADLIGHT LH
C14
HIGH BEAM INDICATOR LIGHT [COMB. METER]
D2
DAYTIME RUNNING LIGHT RELAY
C15
COMBINATION SW
T
EL
H
HF
HU
HL
ED
OFF
TAIL
HEAD
J1
JUNCTION CONNECTOR No. 1
W-B
BR
R
B-Y
G
Y
From "DOME" Fuse (5-8)
From "ENGINE" Fuse (2-7)
From "TAIL RH" Fuse (6-2)
From "CHARGE" Fuse (2-5)
To Clock (8-6)
*3: R-G w/ Daytime Running Light
R-W w/o Daytime Running Light
*4: w/ Daytime Running Light Relay
*5: w/o Daytime Running Light Relay

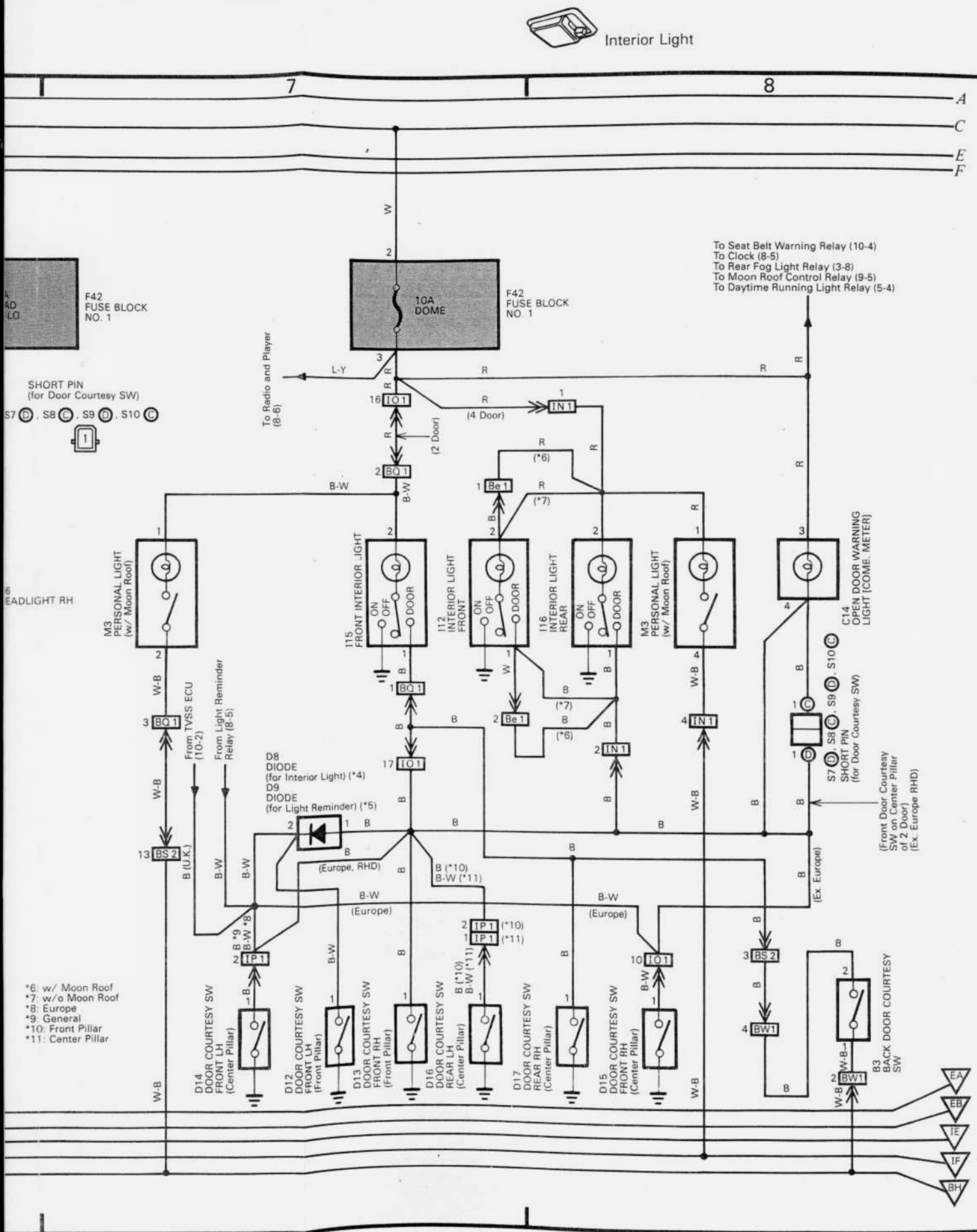
Interior Light
7
8
A
C
E
F
F42
FUSE BLOCK
NO. 1
10A
DOME
To Seat Belt Warning Relay (10-4)
To Clock (8-5)
To Rear Fog Light Relay (3-8)
To Moon Roof Control Relay (9-5)
To Daytime Running Light Relay (5-4)
To Radio and Player
(8-6)
SHORT PIN
(for Door Courtesy SW)
S7 D , S8 C , S9 D , S10 C
(4 Door)
(2 Door)
(*6)
(*7)
M3
PERSONAL LIGHT
(w/ Moon Roof)
I15
FRONT INTERIOR LIGHT
I12
INTERIOR LIGHT
FRONT
I16
INTERIOR LIGHT
REAR
C14
OPEN DOOR WARNING
LIGHT [COMB. METER]
ON
OFF
DOOR
From TVSS ECU
(10-2)
From Light Reminder
Relay (8-5)
D8
DIODE
(for Interior Light) (*4)
D9
DIODE
(for Light Reminder) (*5)
(Europe, RHD)
(Europe)
(Ex. Europe)
(Front Door Courtesy
SW on Center Pillar
of 2 Door)
(Ex. Europe RHD)
*6: w/ Moon Roof
*7: w/o Moon Roof
*8: Europe
*9: General
*10: Front Pillar
*11: Center Pillar
D14
DOOR COURTESY SW
FRONT LH
(Center Pillar)
D12
DOOR COURTESY SW
FRONT LH
(Front Pillar)
D13
DOOR COURTESY SW
FRONT RH
(Front Pillar)
D16
DOOR COURTESY SW
REAR LH
(Center Pillar)
D17
DOOR COURTESY SW
REAR RH
(Center Pillar)
D15
DOOR COURTESY SW
FRONT RH
(Center Pillar)
B3
BACK DOOR COURTESY
SW
EA
EB
IE
IF
BH

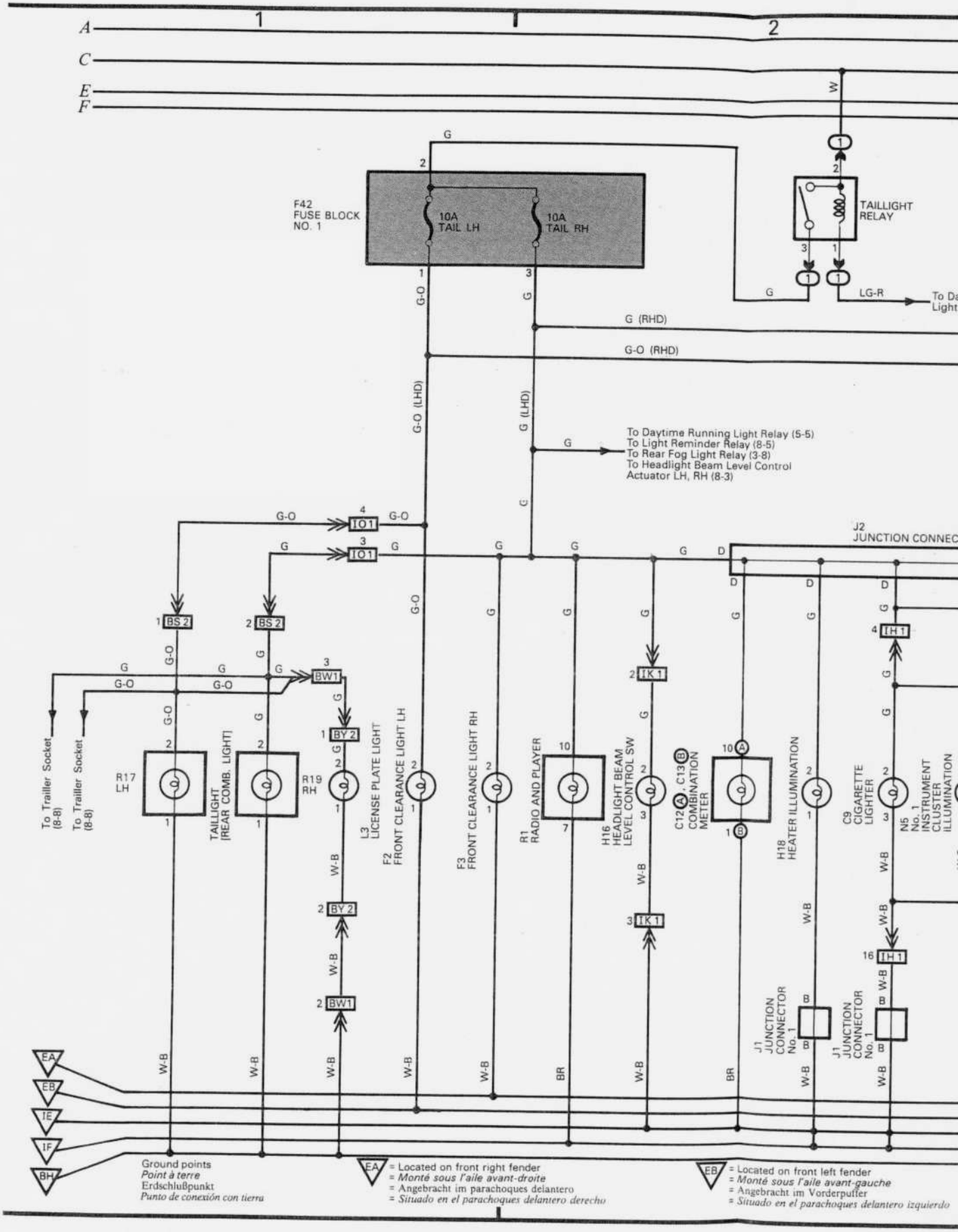
F42
FUSE BLOCK
NO. 1
10A
TAIL LH
10A
TAIL RH
TAILLIGHT
RELAY
G (RHD)
G-O (RHD)
G-O (LHD)
G (LHD)
To Daytime Running Light Relay (5-5)
To Light Reminder Relay (8-5)
To Rear Fog Light Relay (3-8)
To Headlight Beam Level Control
Actuator LH, RH (8-3)
J2
JUNCTION CONNEC
To Trailler Socket
(8-8)
To Trailler Socket
(8-8)
R17
LH
TAILLIGHT
(REAR COMB. LIGHT)
R19
RH
L3
LICENSE PLATE LIGHT
F2
FRONT CLEARANCE LIGHT LH
F3
FRONT CLEARANCE LIGHT RH
R1
RADIO AND PLAYER
H16
HEADLIGHT BEAM
LEVEL CONTROL SW
C12 A, C13 B
COMBINATION
METER
H18
HEATER ILLUMINATION
C9
CIGARETTE
LIGHTER
N5
No. 1
INSTRUMENT
CLUSTER
ILLUMINATION
J1
JUNCTION
CONNECTOR
No. 1
J1
JUNCTION
CONNECTOR
No. 1
Ground points
Point à terre
Erdschlußpunkt
Punto de conexión con tierra
EA = Located on front right fender
= Monté sous l'aile avant-droite
= Angebracht im parachoques delantero
= Situado en el parachoques delantero derecho
EB = Located on front left fender
= Monté sous l'aile avant-gauche
= Angebracht im Vorderpuffer
= Situado en el parachoques delantero izquierdo

Taillight and Illumination (Europe)

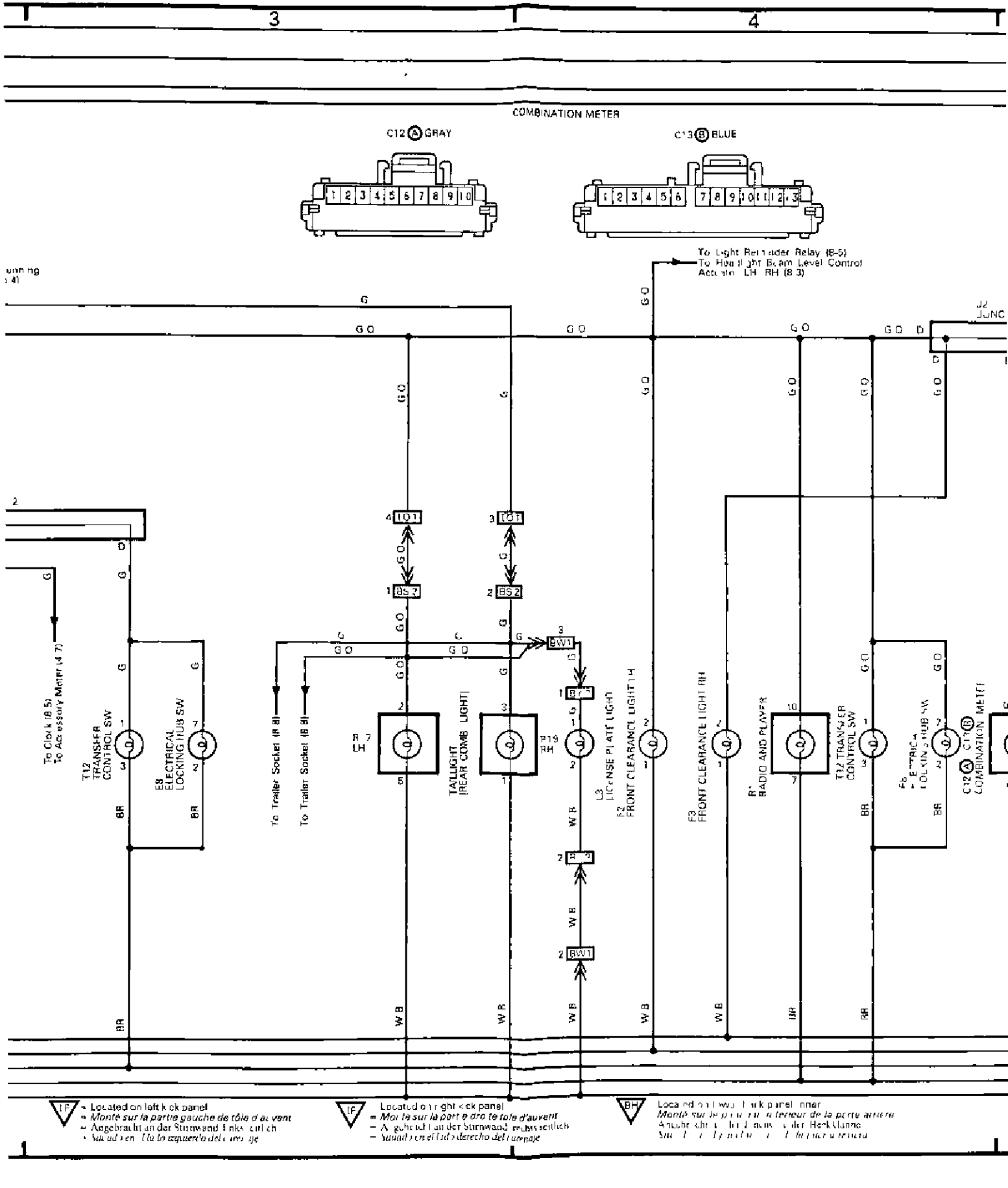

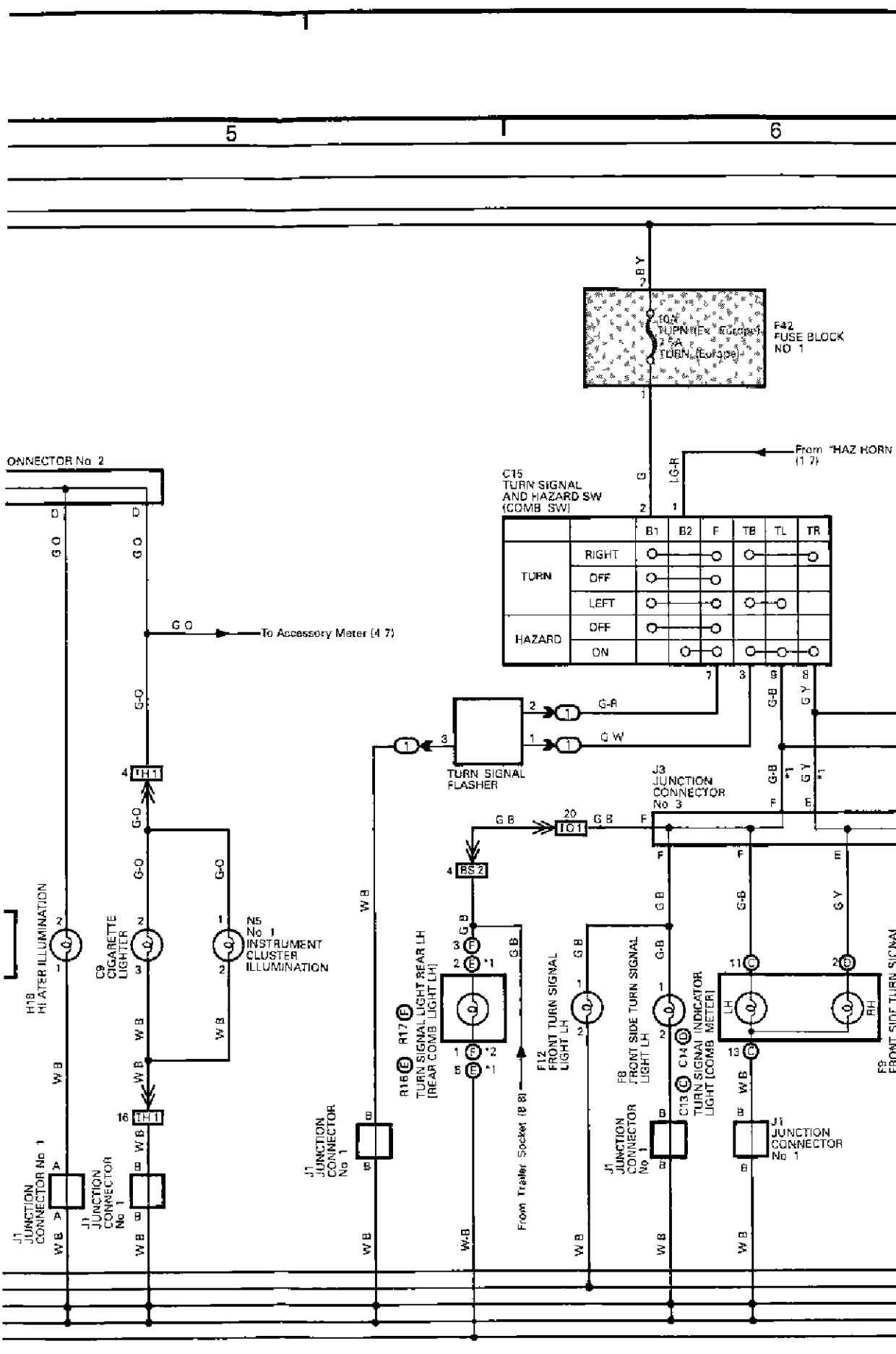
5
6
F42
FUSE BLOCK
NO. 1
10A
TURN (Except Europe)
7.5A
TURN (Europe)
From "HAZ HORN (1-7)
C15
TURN SIGNAL
AND HAZARD SW
(COMB SW)
B1
B2
F
TB
TL
TR
RIGHT
TURN
OFF
LEFT
HAZARD
OFF
ON
To Accessory Meter (4-7)
TURN SIGNAL
FLASHER
J3
JUNCTION
CONNECTOR
No. 3
H18
HEATER ILLUMINATION
C9
CIGARETTE
LIGHTER
N5
No. 1
INSTRUMENT
CLUSTER
ILLUMINATION
J1
JUNCTION
CONNECTOR No. 1
R16
R17
TURN SIGNAL LIGHT REAR LH
(REAR COMB LIGHT LH)
From Trailer Socket (8-8)
F12
FRONT TURN SIGNAL
LIGHT LH
F8
FRONT SIDE TURN SIGNAL
LIGHT LH
C13
C14
TURN SIGNAL INDICATOR
LIGHT (COMB METER)
LH
RH
F9
FRONT SIDE TURN SIGNAL

Turn Signal and Hazard Warning Light

7 8

TURN SIGNAL INDICATOR LIGHT (COMB METER)

C BLUE

D BROWN

TURN SIGNAL LIGHT REAR LH RH (REAR COMB LIGHT LH RH)

R16 R18 E

R17 R19 F GRAY

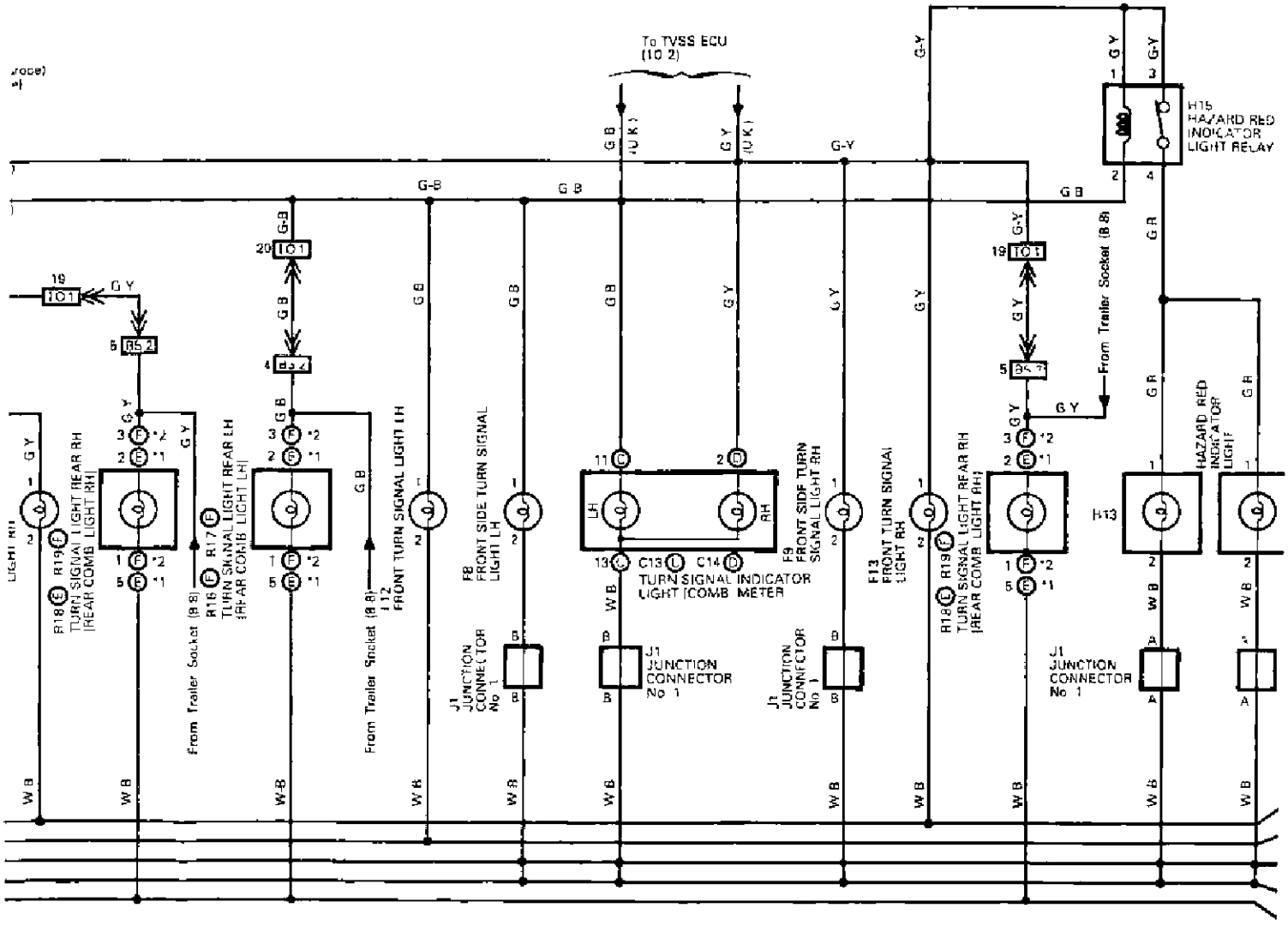

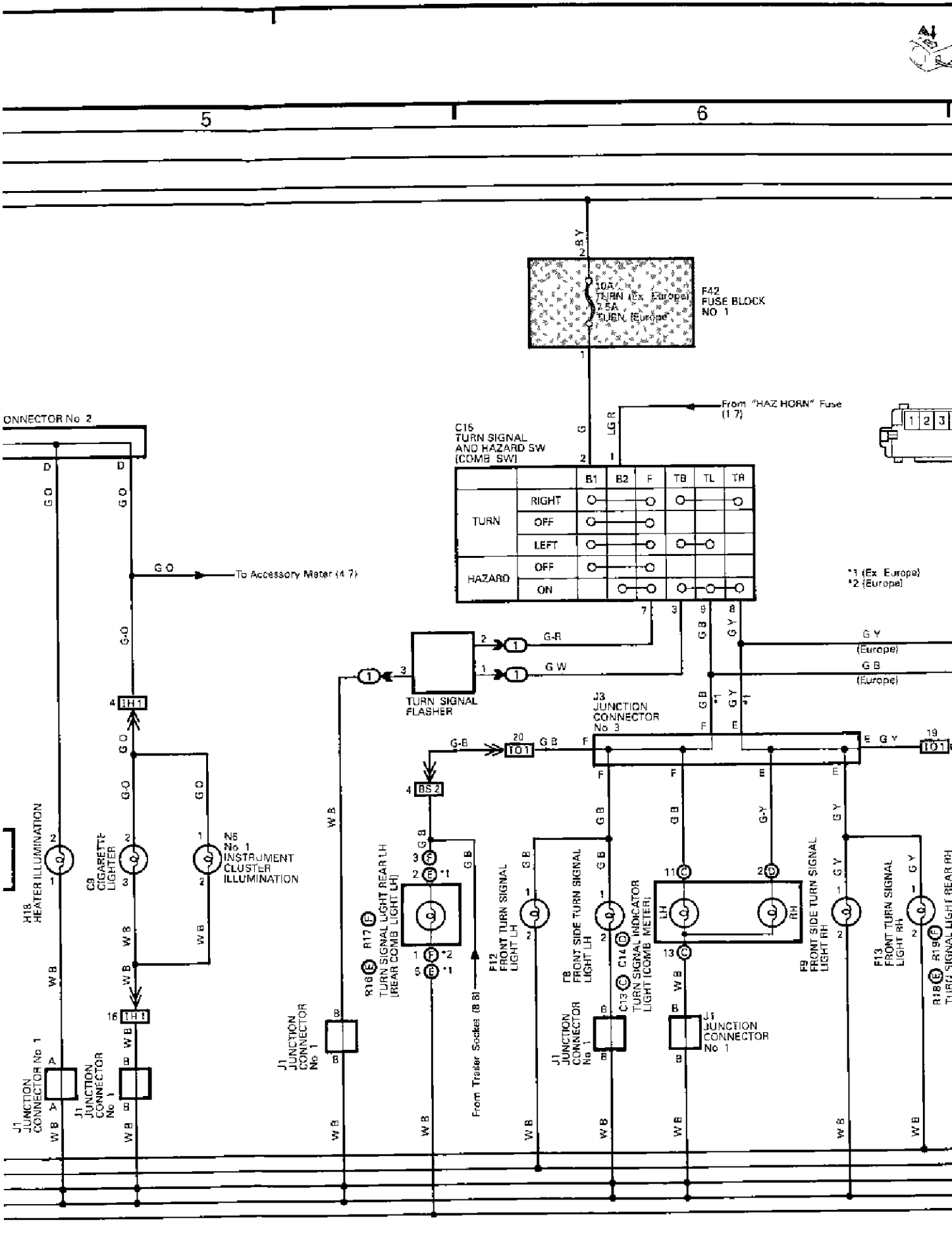
5
6
F42
FUSE BLOCK
NO. 1
10A
7.5A
From "HAZ HORN" Fuse
(1.7)
C15
TURN SIGNAL
AND HAZARD SW
(COMB SW)
B1
B2
F
TB
TL
TR
RIGHT
OFF
LEFT
OFF
ON
TURN
HAZARD
*1 (Ex. Europe)
*2 (Europe)
To Accessory Meter (4.7)
TURN SIGNAL
FLASHER
J3
JUNCTION
CONNECTOR
No. 3
1H1
TH1
TO1
BS2
H18
HEATER ILLUMINATION
C9
CIGARETTE
LIGHTER
N5
No. 1
INSTRUMENT
CLUSTER
ILLUMINATION
J1
JUNCTION
CONNECTOR
No. 1
R17
TURN SIGNAL LIGHT REAR LH
(REAR COMB LIGHT LH)
F12
FRONT TURN SIGNAL
LIGHT LH
F8
FRONT SIDE TURN SIGNAL
LIGHT LH
C14
TURN SIGNAL INDICATOR
LIGHT (COMB METER)
F9
FRONT SIDE TURN SIGNAL
LIGHT RH
F13
FRONT TURN SIGNAL
LIGHT RH
R19
TURN SIGNAL LIGHT REAR RH
From Trailer Socket (8.8)

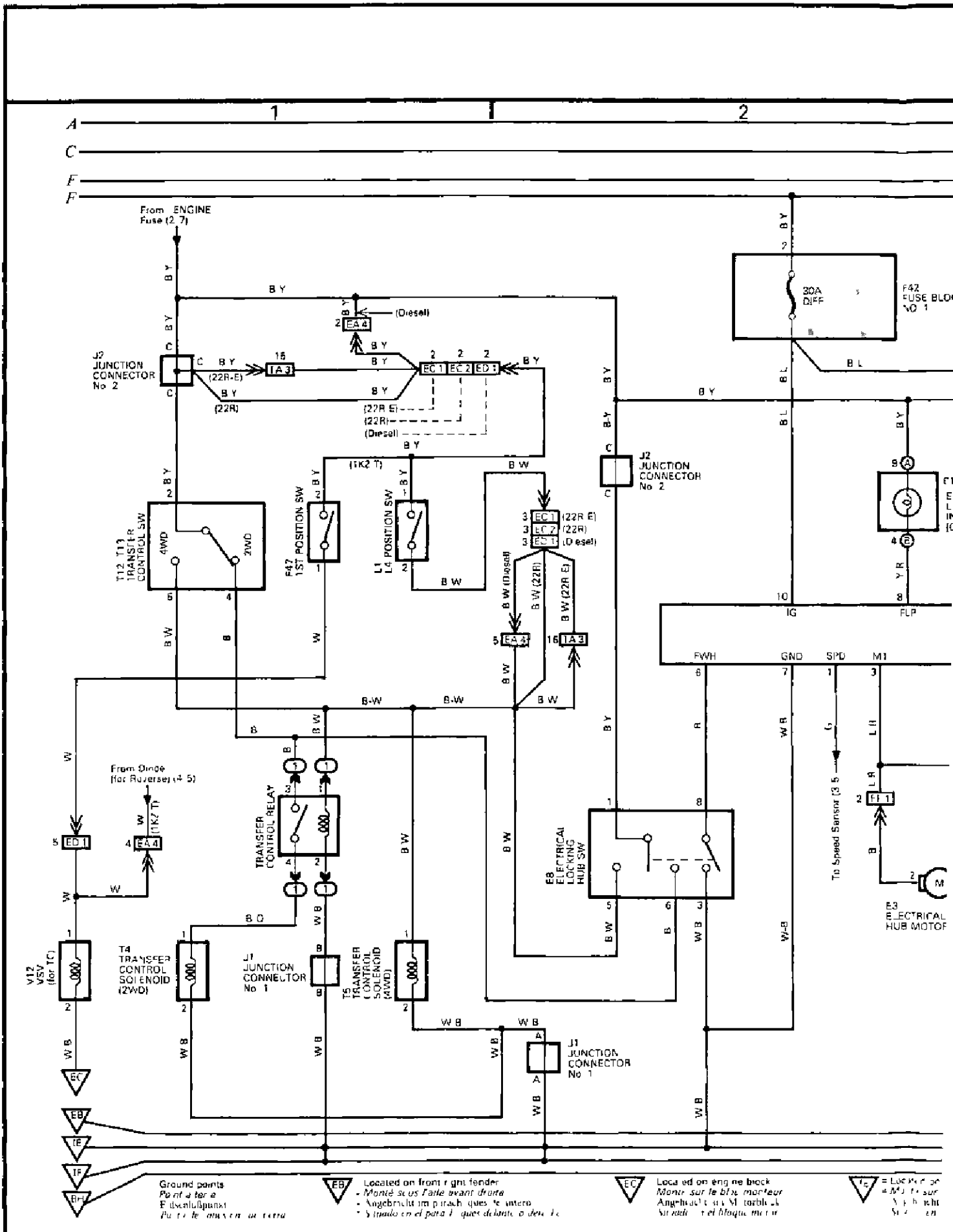
1
2
A
C
F
F
From ENGINE
Fuse (2.7)
B Y
(Diesel)
J2
JUNCTION
CONNECTOR
No. 2
(22R-E)
(22R)
(22R E)
(22R)
(Diesel)
(1K2 T)
T12 T13
TRANSFER
CONTROL S/W
4WD
2WD
F42
1ST POSITION S/W
L1
L4 POSITION S/W
B W
B W (Diesel)
B W (22R)
B W (22R E)
30A
DIFF
F42
FUSE BLOCK
No. 1
B L
J2
JUNCTION
CONNECTOR
No. 2
IG
FLP
Y R
FWH
GND
SPD
M1
From Diode
(for Reverse) (4.5)
(1K2 T)
TRANSFER
CONTROL RELAY
E8
ELECTRICAL
LOCKING
HUB S/W
To Speed Sensor (3.5)
E3
ELECTRICAL
HUB MOTOR
V12
VSV
(for TC)
T4
TRANSFER
CONTROL
SOLENOID
(2WD)
J1
JUNCTION
CONNECTOR
No. 1
T5
TRANSFER
CONTROL
SOLENOID
(4WD)
J1
JUNCTION
CONNECTOR
No. 1
W B
EC
EB
IE
IF
E1
Ground points
Point de terre
Erdungspunkt
Punto de masa
Located on front right fender
Monté sous l'aile avant droite
Angebracht im vorderen rechten Kotflügel
Situado en el paragolpes delantero derecho
Located on engine block
Monté sur le bloc moteur
Angebracht am Motorblock
Situado en el bloque motor

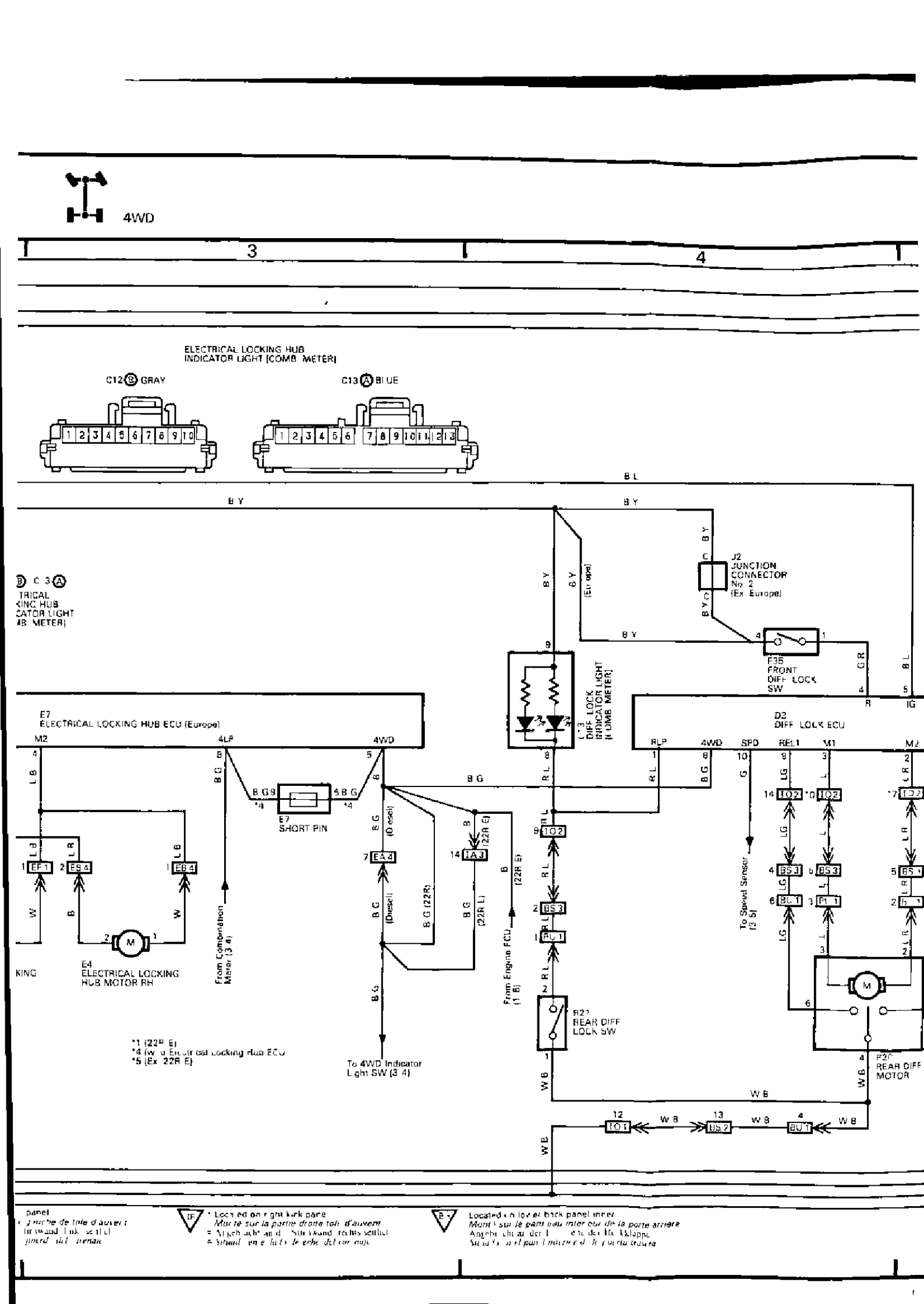
4WD
3
4
ELECTRICAL LOCKING HUB
INDICATOR LIGHT (COMB METER)
C12 B GRAY
C13 A BLUE
J2
JUNCTION
CONNECTOR
No 2
(Ex Europe)
F35
FRONT
DIFF LOCK
SW
C13
DIFF LOCK
INDICATOR LIGHT
(COMB METER)
E7
ELECTRICAL LOCKING HUB ECU (Europe)
D2
DIFF LOCK ECU
E7
SHORT PIN
E4
ELECTRICAL LOCKING
HUB MOTOR RH
From Combination
Meter (3 4)
From Engine ECU
(1 6)
To Speed Sensor
(3 5)
R21
REAR DIFF
LOCK SW
R20
REAR DIFF
MOTOR
To 4WD Indicator
Light SW (3 4)
*1 (22R E)
*4 (w u Electrical Locking Hub ECU
*5 (Ex 22R E)
panel
Located on right kick panel
Monté sur la partie droite toit d'auvent
Located on lower back panel inner
Monté sur le panneau intérieur de la porte arrière

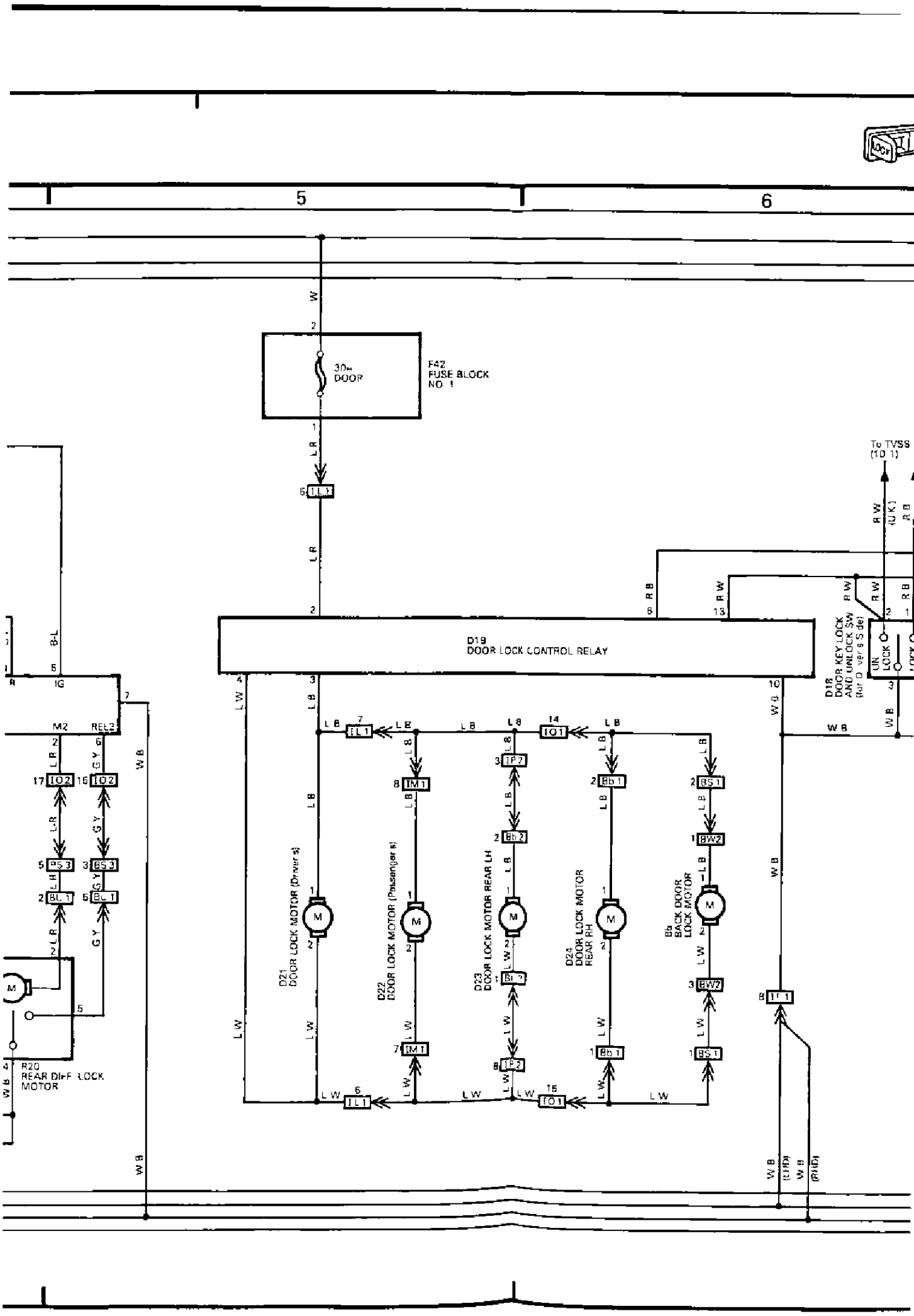

5
6
F42
FUSE BLOCK
NO 1
30A
DOOR
D19
DOOR LOCK CONTROL RELAY
D21
DOOR LOCK MOTOR (Driver's)
D22
DOOR LOCK MOTOR (Passenger's)
D23
DOOR LOCK MOTOR REAR LH
D24
DOOR LOCK MOTOR
REAR RH
Bb
BACK DOOR
LOCK MOTOR
D18
DOOR KEY LOCK
AND UNLOCK SW
(for Driver's Side)
To TVSS
(10 1)
R20
REAR DIFF LOCK
MOTOR

Fuel Heater
(2L-T Europe)

7 8

A
C
E
F

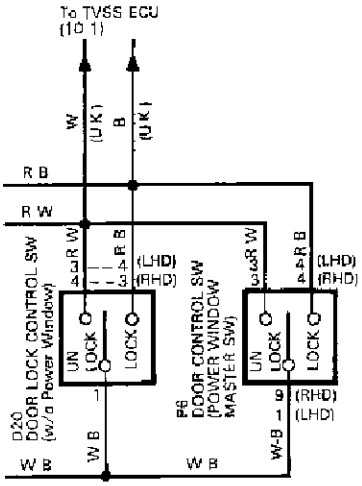

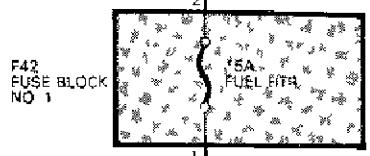

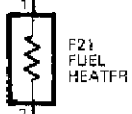

B

W B

E8
1E
1F
8H

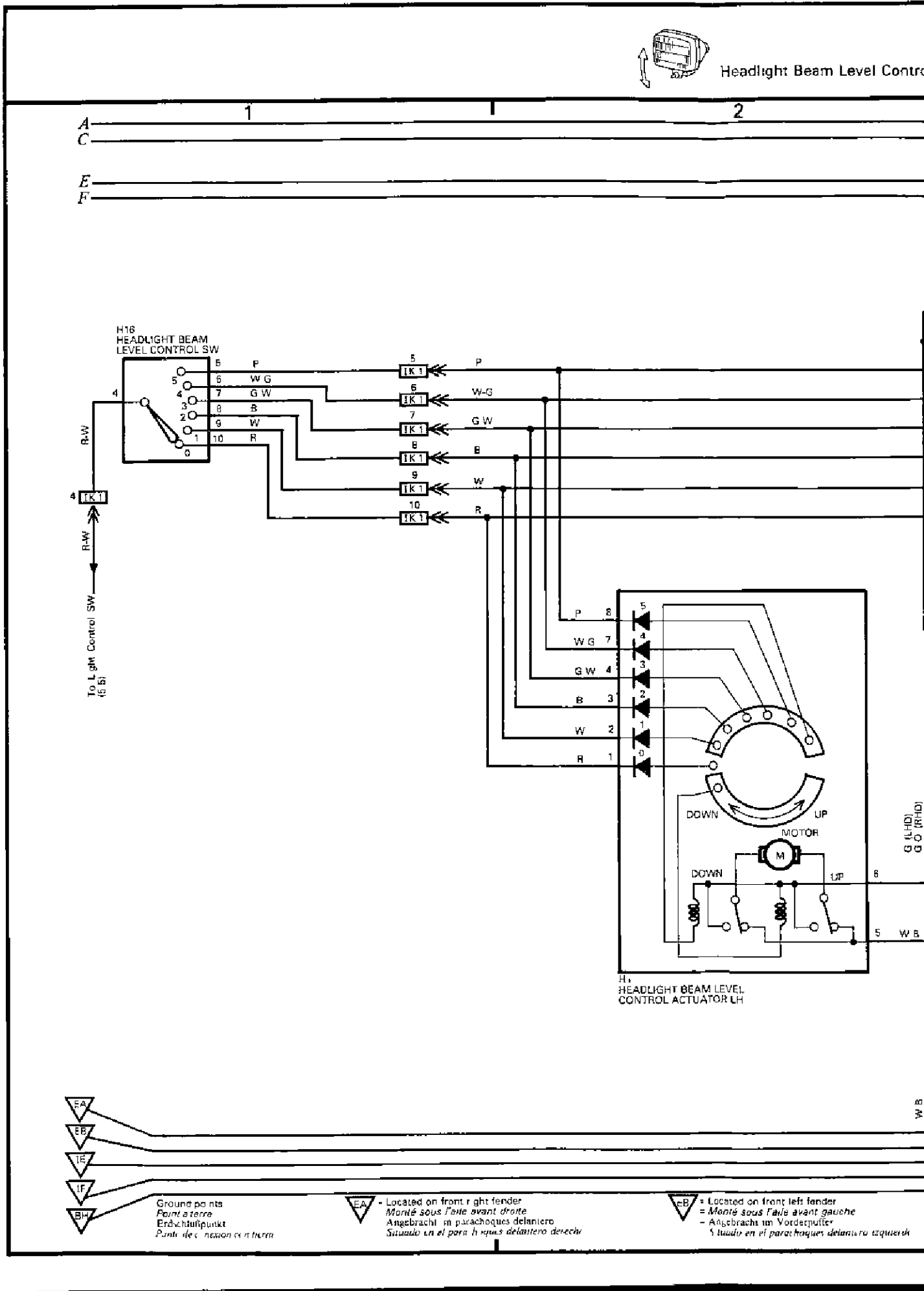
Headlight Beam Level Contro
1
2
A
C
E
F
H16
HEADLIGHT BEAM
LEVEL CONTROL SW
5 P
6 W G
7 G W
8 B
9 W
10 R
4
5
4
3
2
1
0
R-W
4 IK1
R-W
To Light Control SW
(6 5)
5 IK1 P
6 IK1 W-G
7 IK1 G W
8 IK1 B
9 IK1 W
10 IK1 R
P 8
W G 7
G W 4
B 3
W 2
R 1
5
4
3
2
1
0
DOWN
UP
MOTOR
M
DOWN
UP
6
5 W B
G (LHD)
G O (RHD)
H1
HEADLIGHT BEAM LEVEL
CONTROL ACTUATOR LH
W B
EA
EB
IE
IF
BH
Ground points
Point à terre
Erdschlußpunkt
Punto de conexión a tierra
EA - Located on front right fender
Monté sous l'aile avant droite
Angebracht im Vorderkotflügel
Situado en el parachoques delantero derecho
EB = Located on front left fender
= Monté sous l'aile avant gauche
= Angebracht im Vorderkotflügel
Situado en el parachoques delantero izquierdo

Winch

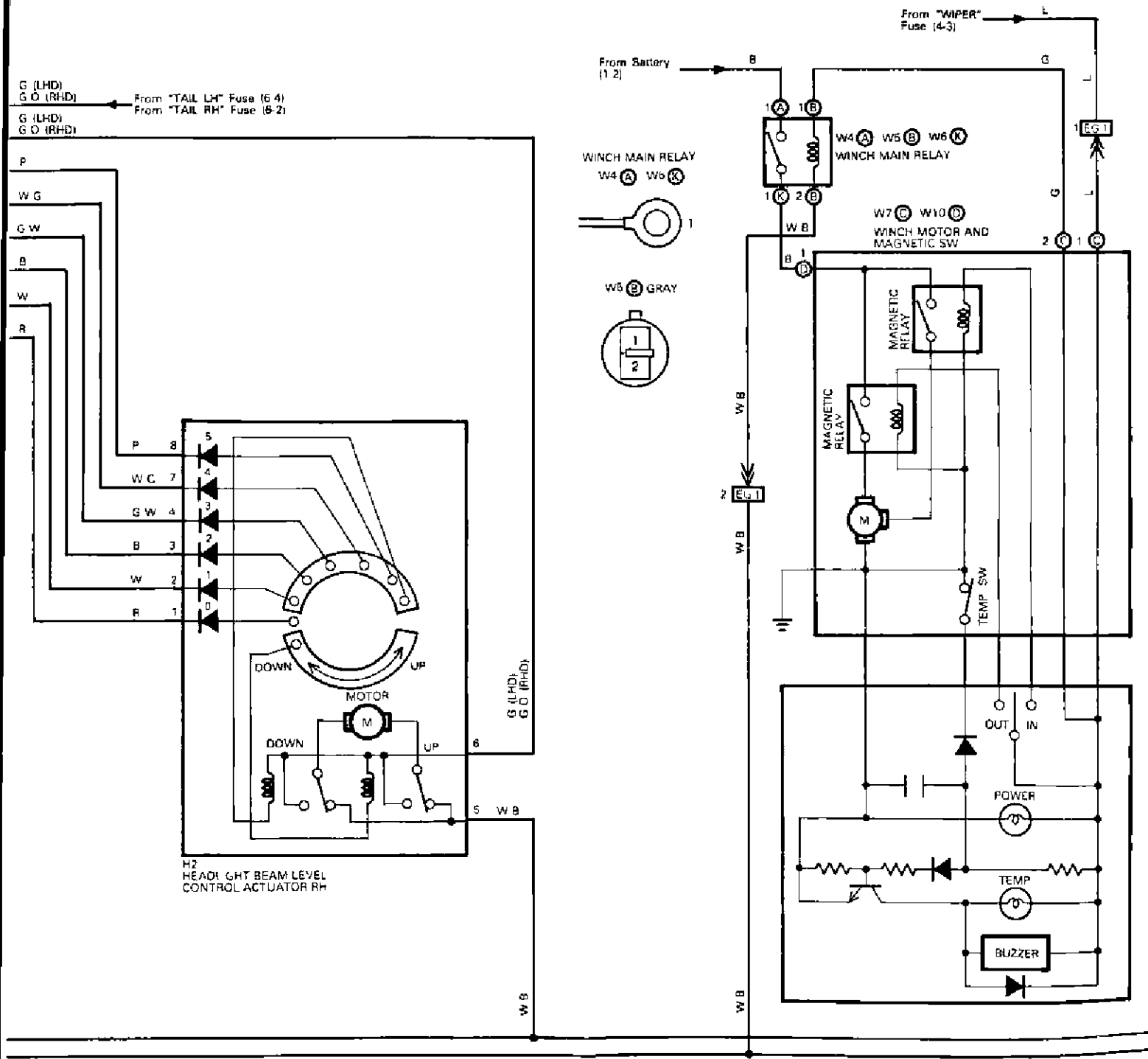

LE = Located on left kick panel
= Monté sur la patte gauche de tôle d'auvent
= Angebracht an der Stirnwand links seitlich
= Situato sul deflettore sinistro del parabrezza

RF = Located on right kick panel
= Monté sur la patte droite tôle d'auvent
= Angebracht an der Stirnwand rechts seitlich
= Situato sul deflettore destro del parabrezza

BH Located on lower back panel inner
Monté sur le panneau intérieur de la porte arrière
Angebracht an der Innenseite der Heckklappe
Situato sul pannello interno della porta posteriore

Light Reminder

Clock

Cigarette Lighter

5

6

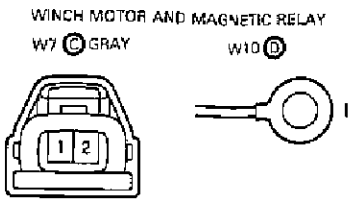

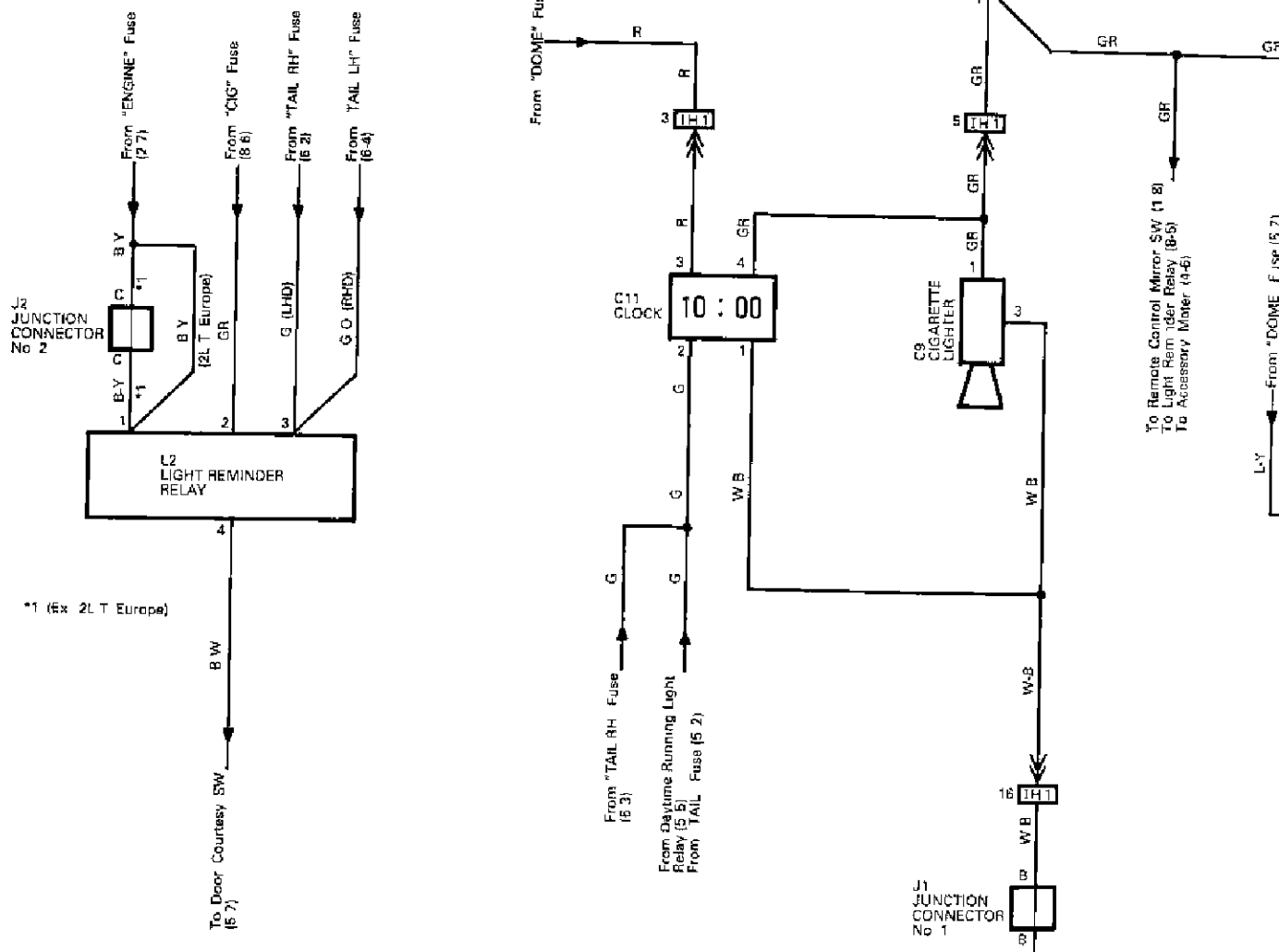

Radio and Player

Trailer Socket

7

8

A

C

F

RADIO AND PLAYER

R1 (J)

R2 (J)

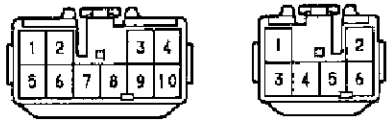

TRAILER SOCKET

T14 (G) BLACK T15 (H) BLACK T16 (E) BLACK T16 (F) BLACK

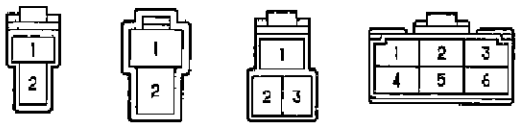

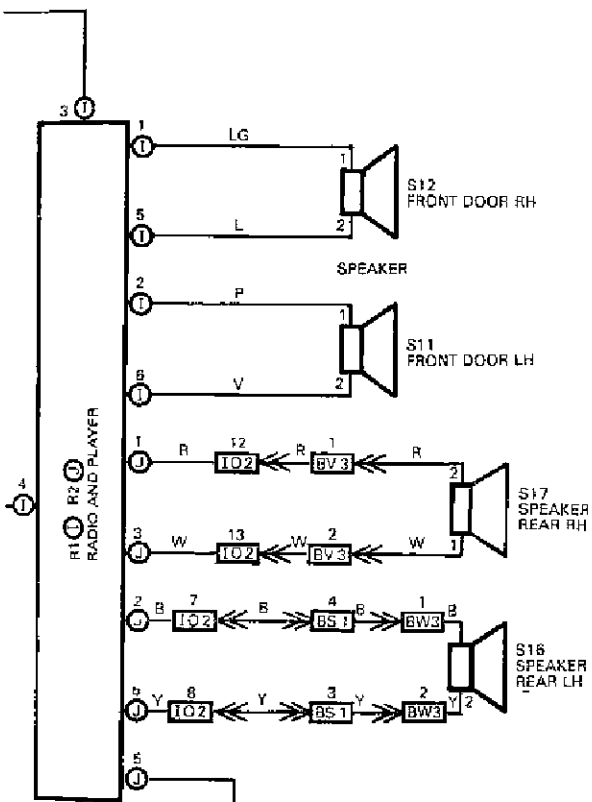

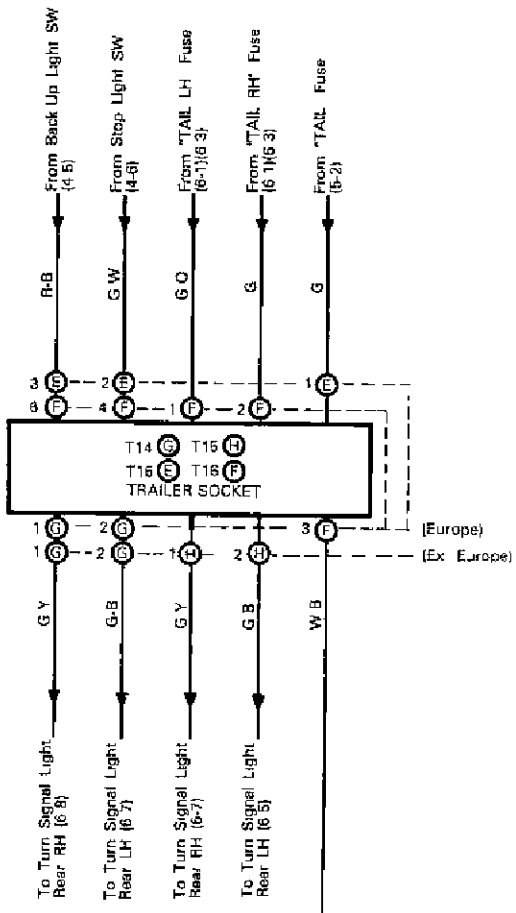

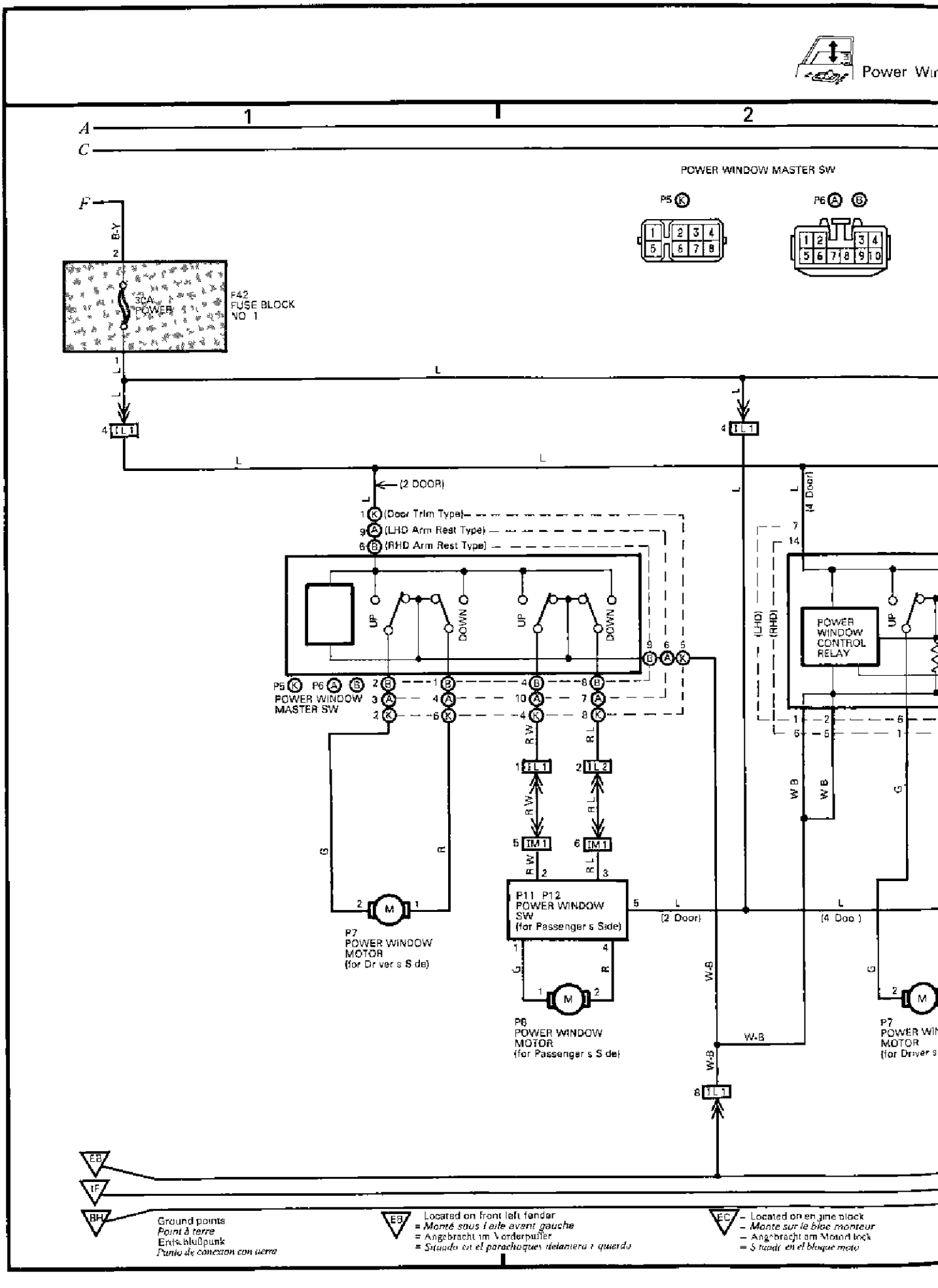
1
2
A
C
POWER WINDOW MASTER SW
P5 K
P6 A B
F
B-Y
2
30A POWER
F42 FUSE BLOCK NO 1
1
L
4 1L1
(2 DOOR)
1 K (Door Trim Type)
9 A (LHD Arm Rest Type)
6 B (RHD Arm Rest Type)
UP
DOWN
P5 K P6 A B
POWER WINDOW MASTER SW
R-W
R-L
1L1
2L2
5 1M1
6 1M1
G
R
2 M 1
P7 POWER WINDOW MOTOR (for Driver s Side)
P11 P12 POWER WINDOW SW (for Passenger s Side)
(2 Door)
(4 Door)
P6 POWER WINDOW MOTOR (for Passenger s Side)
W-B
8 1L1
(LHD)
(RHD)
POWER WINDOW CONTROL RELAY
P7 POWER WIN MOTOR (for Driver s
EB
1F
BH
Ground points
Point à terre
Erdungspunkt
Punto de conexion con tierra
EB Located on front left fender
= Monté sous l aile avant gauche
= Angebracht im Vorderpuffer
= Situado en el parachoques delantero i quierdo
EC – Located on engine block
– Monte sur le bloc moteur
– Angebracht am Motorblock
= Situado en el bloque motor

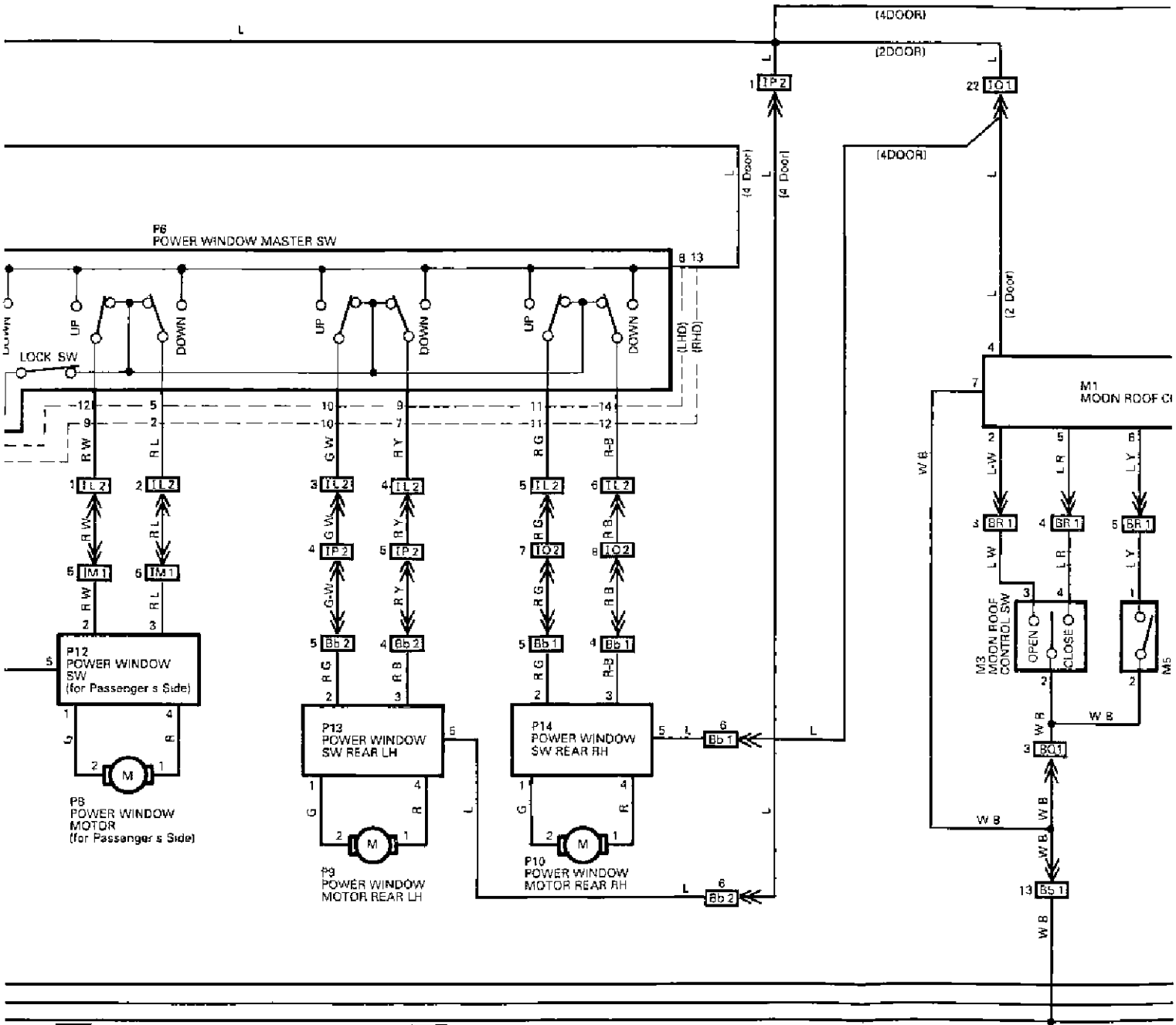

TF – Located on right kick panel
– *Monte sur la part e droite tôle d'auvent*
Angebracht an de St rmwand rechts seitl ch
Situado en el lado derecho del carenaje

BH – Located on lower back panel inner
– *Monté sur le panneau intérieur de la porte arrière*
Angebracht an der Innenseite der Heckklappe
Situado en el panel interior de la puerta trasera

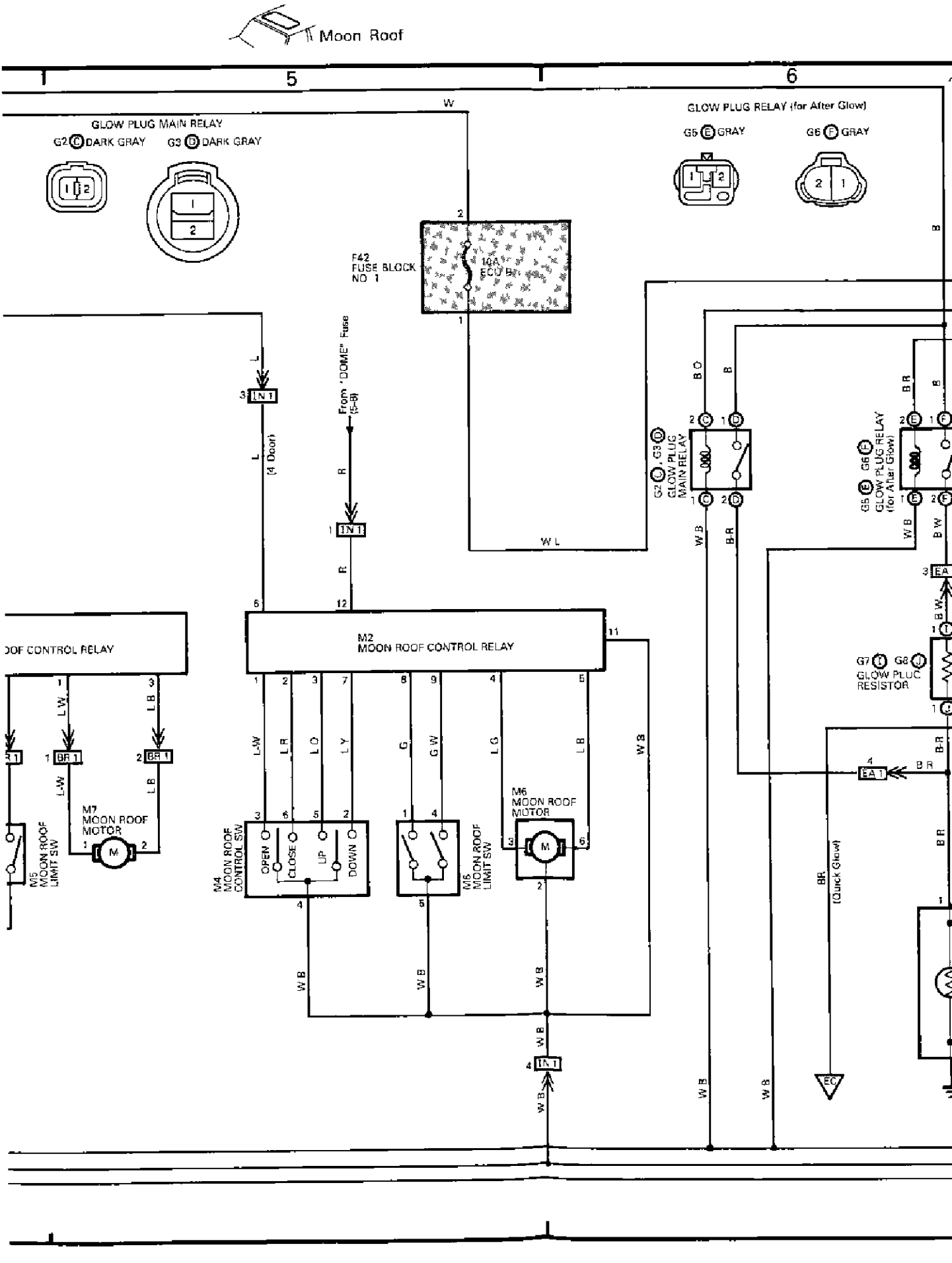
Moon Roof
5
6
GLOW PLUG MAIN RELAY
G2 C DARK GRAY
G3 D DARK GRAY
GLOW PLUG RELAY (for After Glow)
G5 E GRAY
G6 F GRAY
F42
FUSE BLOCK
NO. 1
10A
ECU-B
From "DOME" Fuse
(5-8)
(4 Door)
M2
MOON ROOF CONTROL RELAY
M4
MOON ROOF
CONTROL SW
OPEN
CLOSE
UP
DOWN
M5
MOON ROOF
LIMIT SW
M6
MOON ROOF
LIMIT SW
M7
MOON ROOF
MOTOR
M6
MOON ROOF
MOTOR
G2 C , G3 D
GLOW PLUG
MAIN RELAY
G5 E G6 F
GLOW PLUG RELAY
(for After Glow)
G7 G8
GLOW PLUG
RESISTOR
IN 1
EA 1
BR 1
(Quick Glow)
EC

Glow and Emission Control (2L T Austria)

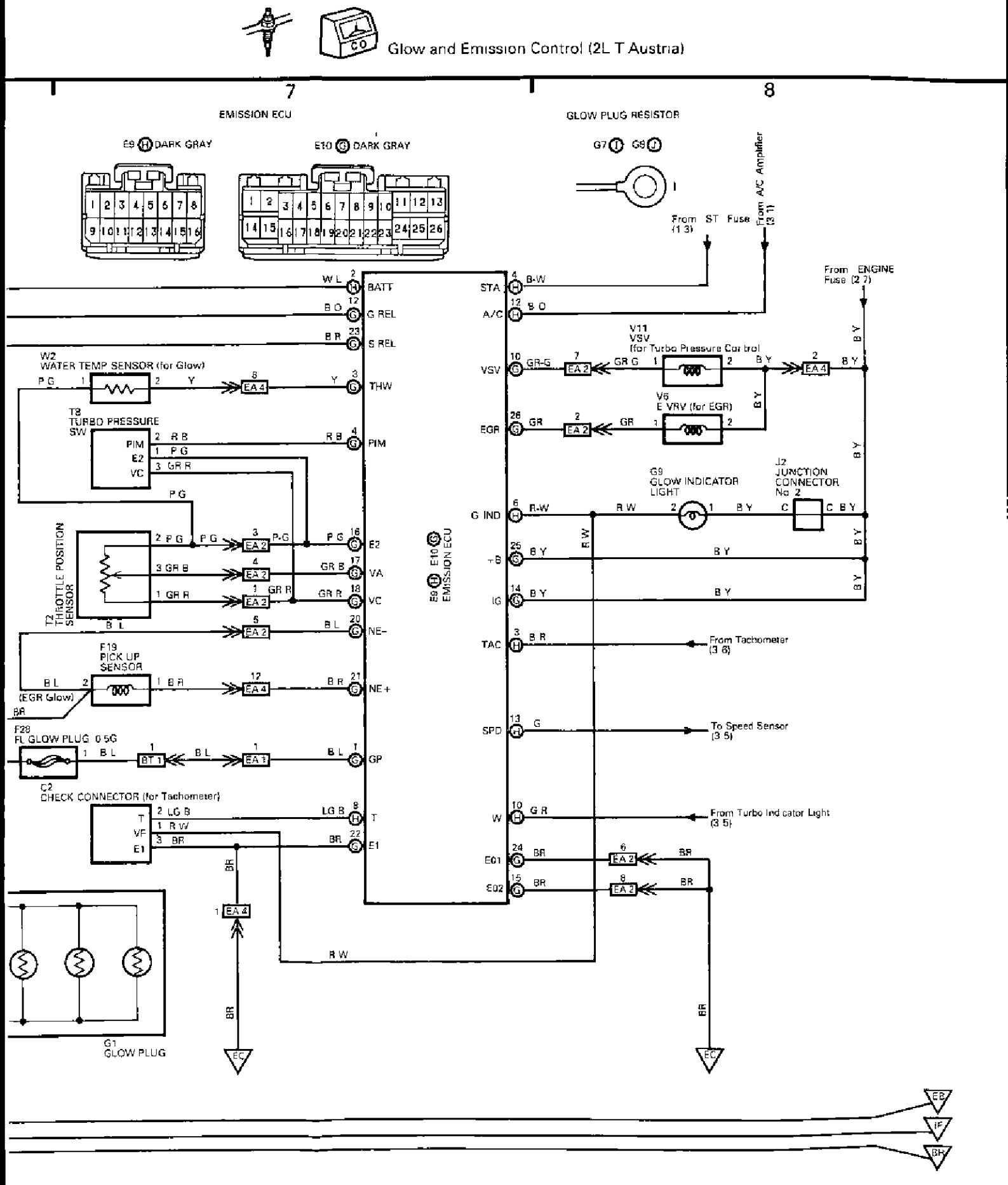

TVSS (Toyota Vehic

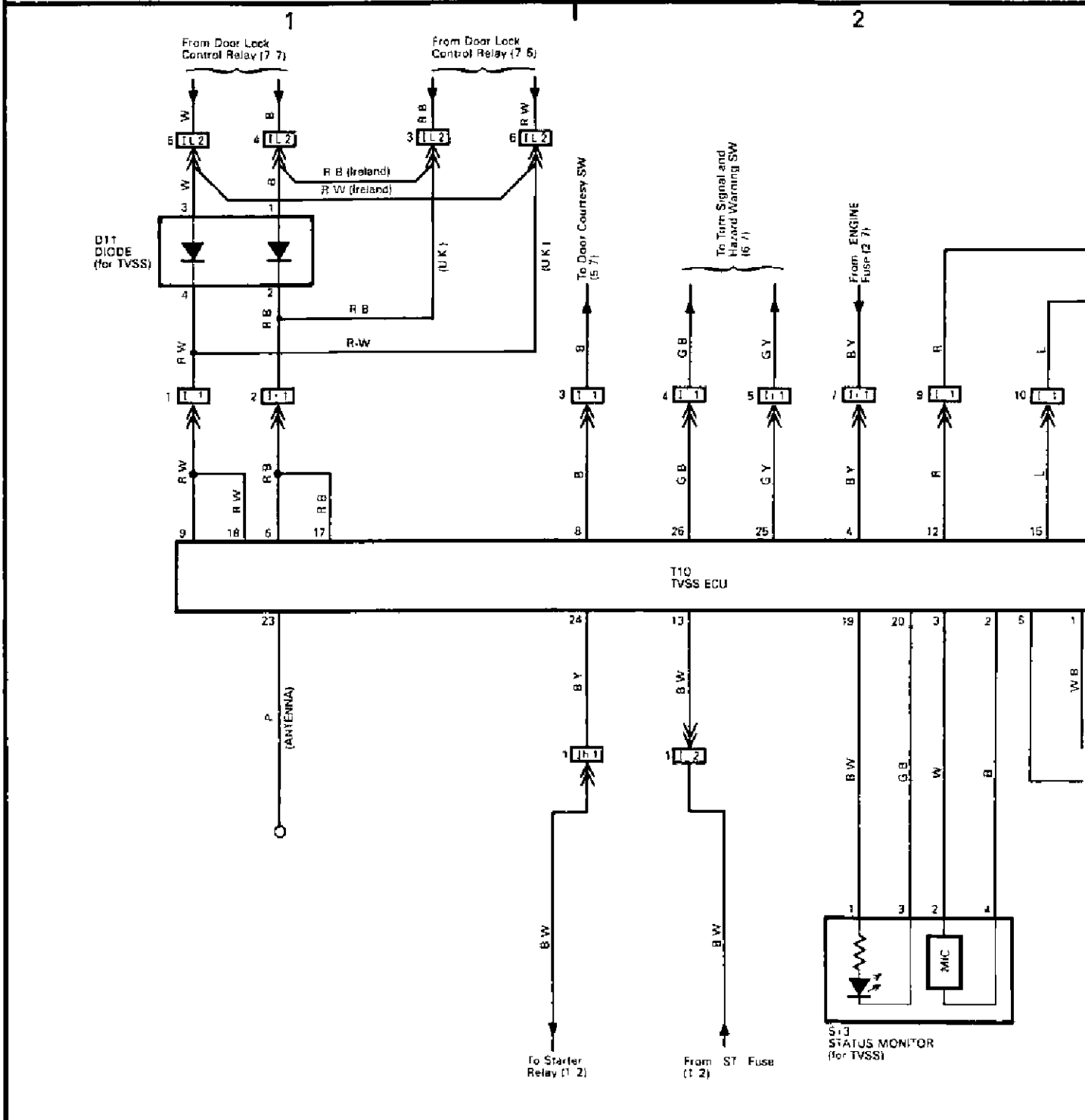

Security System)

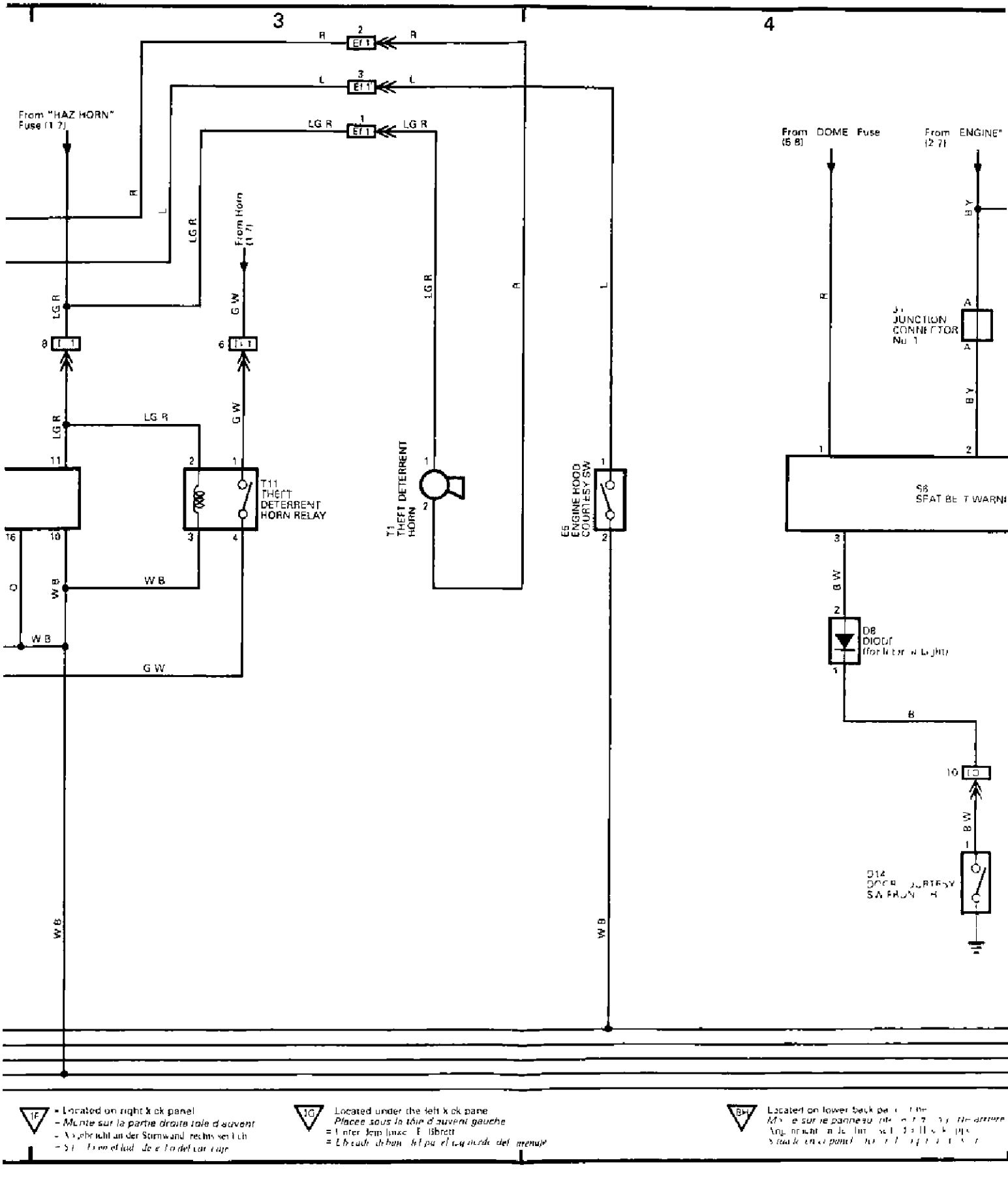

= Located on right kick panel
– Monte sur la partie droite tole d'auvent
– Ausgebracht an der Stirnwand rechts seitlich
– [illegible]

Located under the left kick pane
Placee sous la tole d'auvent gauche
= Unter dem linken Eilbrett
= Ubicado debajo del panel izquierdo del arenaje

Located on lower back pa[illegible]
[illegible]
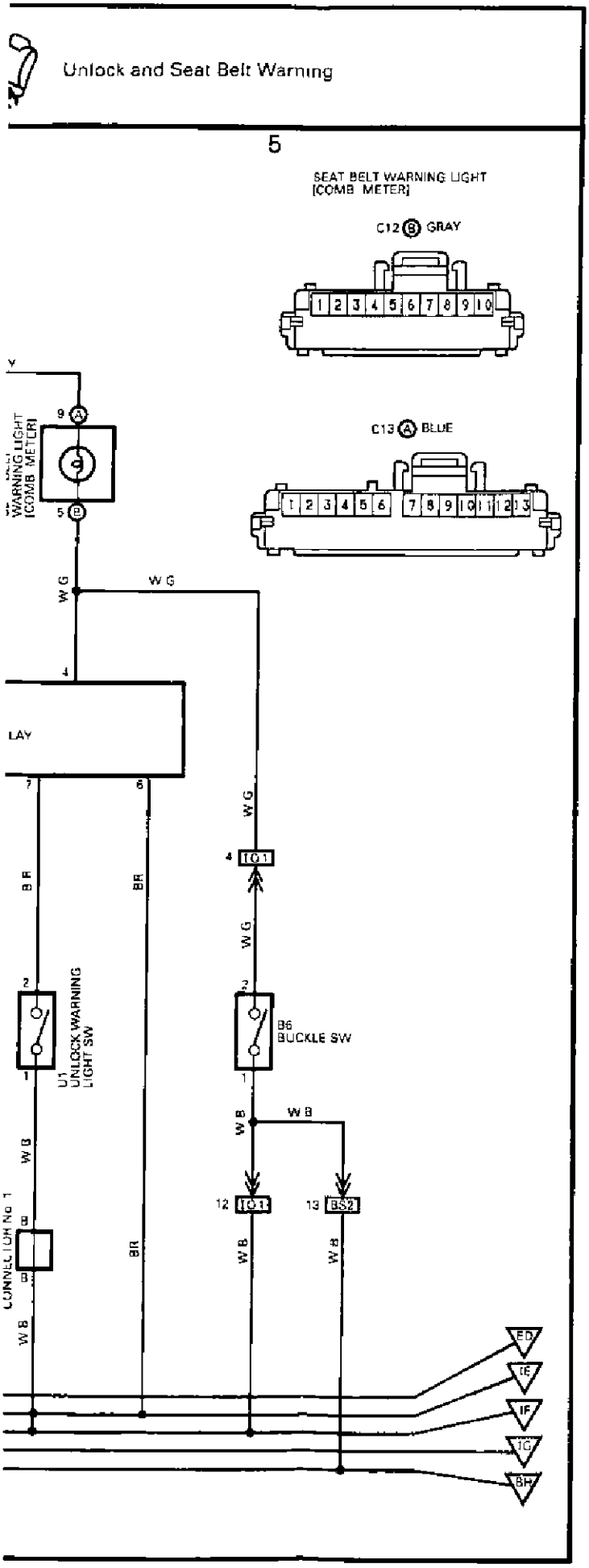
Unlock and Seat Belt Warning