TOYOTA
LAND CRUISER
ELECTRICAL WIRING DIAGRAM
2003 MODEL

Donated by Paul Stockhoff . crulsercult.com

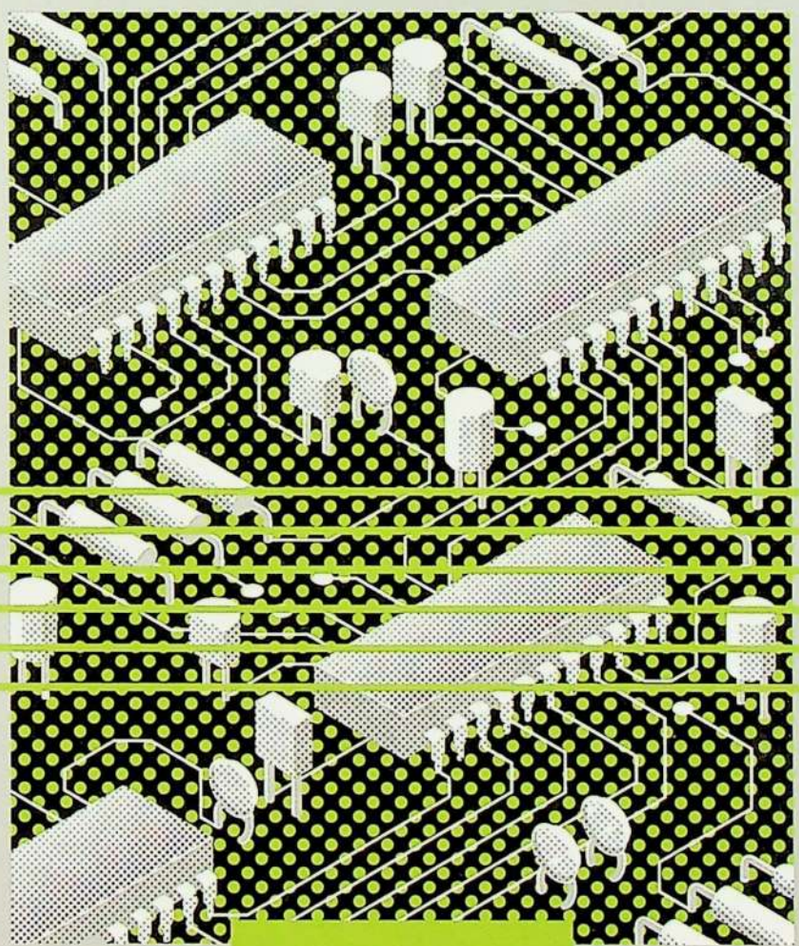

Pub. No. EWD510U

FOREWORD

This wiring diagram manual has been prepared to provide information on the electrical system of the 2003 LAND CRUISER.

Applicable models: UZJ100 Series

For service specifications and repair procedures of the above models other than those listed in this manual, refer to the following manuals;

Manual Name	Pub. No.
• 2003 LAND CRUISER Repair Manual	
Volume 1	RM966U1
Volume 2	RM966U2
• 2003 TOYOTA New Car Features	NCF228U

All information in this manual is based on the latest product information at the time of publication. However, specifications and procedures are subject to change without notice.

TOYOTA MOTOR CORPORATION

NOTICE

When handling supplemental restraint system components (removal, installation or inspection, etc.), always follow the direction given in the repair manuals listed above to prevent accidents and supplemental restraint system malfunction.

2003 LAND CRUISER
ELECTRICAL WIRING DIAGRAM

	Section Code	Page
INTRODUCTION	A	2
HOW TO USE THIS MANUAL	B	3
TROUBLESHOOTING	C	12
ABBREVIATIONS	D	17
GLOSSARY OF TERMS AND SYMBOLS	E	18
RELAY LOCATIONS	F	20
ELECTRICAL WIRING ROUTING	G	68
SYSTEM CIRCUITS	H	93
GROUND POINT	I	372
POWER SOURCE (Current Flow Chart)	J	380
CONNECTOR LIST	K	390
PART NUMBER OF CONNECTORS	L	402
OVERALL ELECTRICAL WIRING DIAGRAM	M	406

©2002 TOYOTA MOTOR CORPORATION
All rights reserved. This book may not be reproduced or copied, in whole or in part, without the written permission of Toyota Motor Corporation.

A INTRODUCTION

This manual consists of the following 13 sections:

No.	Section	Description
A	INDEX	Index of the contents of this manual.
	INTRODUCTION	Brief explanation of each section.
B	HOW TO USE THIS MANUAL	Instructions on how to use this manual.
C	TROUBLE-SHOOTING	Describes the basic inspection procedures for electrical circuits.
D	ABBREVIATIONS	Defines the abbreviations used in this manual.
E	GLOSSARY OF TERMS AND SYMBOLS	Defines the symbols and functions of major parts.
F	RELAY LOCATIONS	Shows position of the Electronic Control Unit, Relays, Relay Block, etc. This section is closely related to the system circuit
G	ELECTRICAL WIRING ROUTING	Describes position of Parts Connectors, Splice points, Ground points, etc. This section is closely related to the system circuit.
H	INDEX	Index of the system circuits.
	SYSTEM CIRCUITS	Electrical circuits of each system are shown from the power supply through ground points. Wiring connections and their positions are shown and classified by code according to the connection method. (Refer to the section, "How to use this manual"). The "System Outline" and "Service Hints" useful for troubleshooting are also contained in this section.
I	GROUND POINT	Shows ground positions of all parts described in this manual.
J	POWER SOURCE (Current Flow Chart)	Describes power distribution from the power supply to various electrical loads.
K	CONNECTOR LIST	Describes the form of the connectors for the parts appeared in this book. This section is closely related to the system circuit.
L	PART NUMBER OF CONNECTORS	Indicates the part number of the connectors used in this manual.
M	OVERALL ELECTRICAL WIRING DIAGRAM	Provides circuit diagrams showing the circuit connections.

This manual provides information on the electrical circuits installed on vehicles by dividing them into a circuit for each system.

The actual wiring of each system circuit is shown from the point where the power source is received from the battery as far as each ground point. (All circuit diagrams are shown with the switches in the OFF position.)

When troubleshooting any problem, first understand the operation of the circuit where the problem was detected (see System Circuit section), the power source supplying power to that circuit (see Power Source section), and the ground points (see Ground Point section). See the System Outline to understand the circuit operation.

When the circuit operation is understood, begin troubleshooting of the problem circuit to isolate the cause. Use Relay Location and Electrical Wiring Routing sections to find each part, junction block and wiring harness connectors, wiring harness and wiring harness connectors, splice points, and ground points of each system circuit. Internal wiring for each junction block is also provided for better understanding of connection within a junction block.
Wiring related to each system is indicated in each system circuit by arrows (from__, to__). When overall connections are required, see the Overall Electrical Wiring Diagram at the end of this manual.

[A]

* The system shown here is an EXAMPLE ONLY. It is different to the actual circuit shown in the SYSTEM CIRCUITS SECTION.

Stop Light

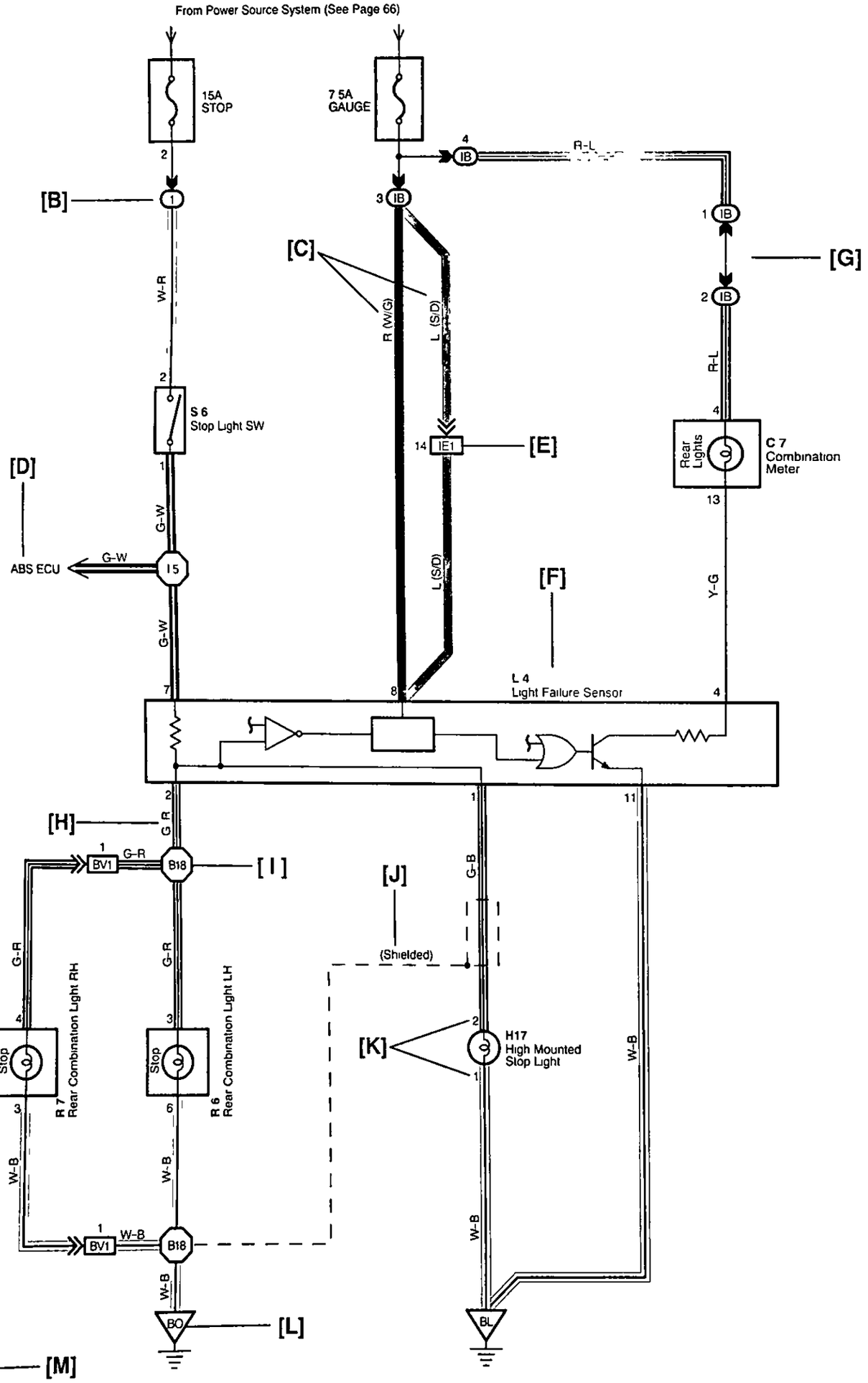

[A] : System Title

[B] : Indicates a Relay Block. No shading is used and only the Relay Block No. is shown to distinguish it from the J/B

Example: ① Indicates Relay Block No.1

[C] : ( ) is used to indicate different wiring and connector, etc. when the vehicle model, engine type, or specification is different.

[D] : Indicates related system.

[E] : Indicates the wiring harness and wiring harness connector. The wiring harness with male terminal is shown with arrows (»).
Outside numerals are pin numbers.

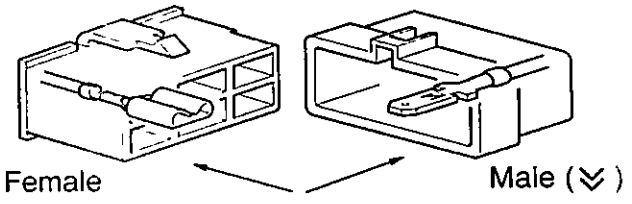

The first letter of the code for each wiring harness and wiring harness connector(s) indicates the component's location, e.g, "E" for the Engine Compartment, "I" for the Instrument Panel and Surrounding area, and "B" for the Body and Surrounding area.

When more than one code has the first and second letters in common, followed by numbers (e.g, IH1, IH2), this indicates the same type of wiring harness and wiring harness connector.

[F] : Represents a part (all parts are shown in sky blue). The code is the same as the code used in parts position.

[G] : Junction Block (The number in the circle is the J/B No. and the connector code is shown beside it). Junction Blocks are shaded to clearly separate them from other parts.

Example:

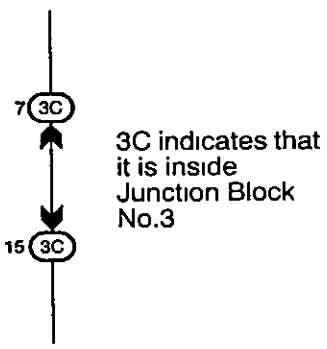

[H] : Indicates the wiring color.

Wire colors are indicated by an alphabetical code.

B	= Black	W	= White	BR	= Brown
L	= Blue	V	= Violet	SB	= Sky Blue
R	= Red	G	= Green	LG	= Light Green
P	= Pink	Y	= Yellow	GR	= Gray
O	= Orange				

The first letter indicates the basic wire color and the second letter indicates the color of the stripe.

Example: L - Y

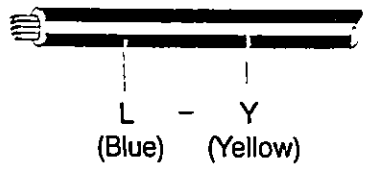

[I] : Indicates a wiring Splice Point (Codes are "E" for the Engine Room, "I" for the Instrument Panel, and "B" for the Body).

Example:

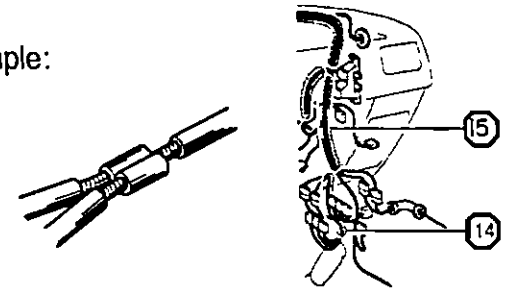

The Location of splice Point I 5 is indicated by the shaded section.

[J] : Indicates a shielded cable.

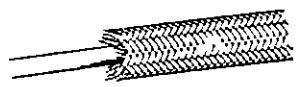

[K] : Indicates the pin number of the connector.
The numbering system is different for female and male connectors.

Example: Numbered in order from upper left to lower right / Numbered in order from upper right to lower left

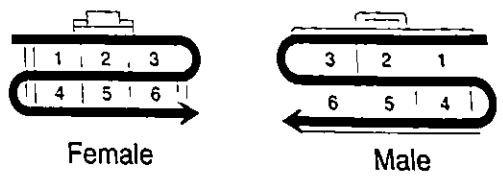

[L] : Indicates a ground point.

The first letter of the code for each ground point(s) indicates the component's location, e.g, "E" for the Engine Compartment, "I" for the Instrument Panel and Surrounding area, and "B" for the Body and Surrounding area.

[M] : Page No.

[N] **System Outline**

Current is applied at all times through the STOP fuse to TERMINAL 2 of the stop light SW.
When the ignition SW is turned on, current flows from the GAUGE fuse to TERMINAL 8 of the light failure sensor, and also flows through the rear lights warning light to TERMINAL 4 of the light failure sensor

Stop Light Disconnection Warning

When the ignition SW is turned on and the brake pedal is pressed (Stop light SW on), if the stop light circuit is open, the current flowing from TERMINAL 7 of the light failure sensor to TERMINALS 1, 2 changes, so the light failure sensor detects the disconnection and the warning circuit of the light failure sensor is activated.
As a result, the current flows from TERMINAL 4 of the light failure sensor to TERMINAL 11 to GROUND and turns the rear lights warning light on By pressing the brake pedal, the current flowing to TERMINAL 8 of the light failure sensor keeps the warning circuit on and holds the warning light on until the ignition SW is turned off

[O] **Service Hints**

S6 Stop Light SW

2-1 : Closed with the brake pedal depressed

L4 Light Failure Sensor

1, 2, 7-Ground : Approx 12 volts with the stop light SW on
4, 8-Ground : Approx 12 volts with the ignition SW at ON position
11-Ground . Always continuity

[P] ○ : **Parts Location**

Code	See Page	Code	See Page	Code	See Page
C7	34	L4	36	R7	37
H17	36	R6	37	S6	35

[Q] ▢ : **Relay Blocks**

Code	See Page	Relay Blocks (Relay Block Location)
1	18	R/B No 1 (Instrument Panel Brace LH)

[R] ▢ : **Junction Block and Wire Harness Connector**

Code	See Page	Junction Block and Wire Harness (Connector Location)
IB	20	Instrument Panel Wire and Instrument Panel J/B (Lower Finish Panel)
3C	22	Instrument Panel Wire and J/B No 3 (Instrument Panel Brace LH)

[S] □ : **Connector Joining Wire Harness and Wire Harness**

Code	See Page	Joining Wire Harness and Wire Harness (Connector Location)
IE1	42	Floor Wire and Instrument Panel Wire (Left Kick Panel)
BV1	50	Luggage Room Wire and Floor Wire (Luggage Room Left)

[T] ▽ : **Ground Points**

Code	See Page	Ground Points Location
BL	50	Under the Left Center Pillar
BO	50	Back Panel Center

[U] ⬡ : **Splice Points**

Code	See Page	Wire Harness with Splice Points	Code	See Page	Wire Harness with Splice Points
I5	44	Cowl Wire	B18	50	Luggage Room Wire

[N] : Explains the system outline.

[O] : Indicates values or explains the function for reference during troubleshooting.

[P] : Indicates the reference page showing the position on the vehicle of the parts in the system circuit.

Example : Part "L4" (Light Failure Sensor) is on page 36 of the manual.

- The letter in the code is from the first letter of the part, and the number indicates its order in parts starting with that letter.

Example : L 4
- 4 — Parts is 4th in order
- L — Light Failure Sensor

[Q] : Indicates the reference page showing the position on the vehicle of Relay Block Connectors in the system circuit.

Example . Connector "1" is described on page 18 of this manual and is installed on the left side of the instrument panel.

[R] : Indicates the reference page showing the position on the vehicle of J/B and Wire Harness in the system circuit.

Example . Connector "3C" connects the Instrument Panel Wire and J/B No.3. It is described on page 22 of this manual, and is installed on the instrument panel left side.

[S] : Indicates the reference page describing the wiring harness and wiring harness connector (the female wiring harness is shown first, followed by the male wiring harness).

Example : Connector "IE1" connects the floor wire (female) and Instrument panel wire (male). It is described on page 42 of this manual, and is installed on the left side kick panel.

[T] : Indicates the reference page showing the position of the ground points on the vehicle.

Example : Ground point "BO" is described on page 50 of this manual and is installed on the back panel center.

[U] : Indicates the reference page showing the position of the splice points on the vehicle.

Example : Splice point "I5" is on the Cowl Wire Harness and is described on page 44 of this manual.

B HOW TO USE THIS MANUAL

The ground points circuit diagram shows the connections from all major parts to the respective ground points. When troubleshooting a faulty ground point, checking the system circuits which use a common ground may help you identify the problem ground quickly. The relationship between ground points (EA, IB and IC shown below) can also be checked this way.

I GROUND POINT

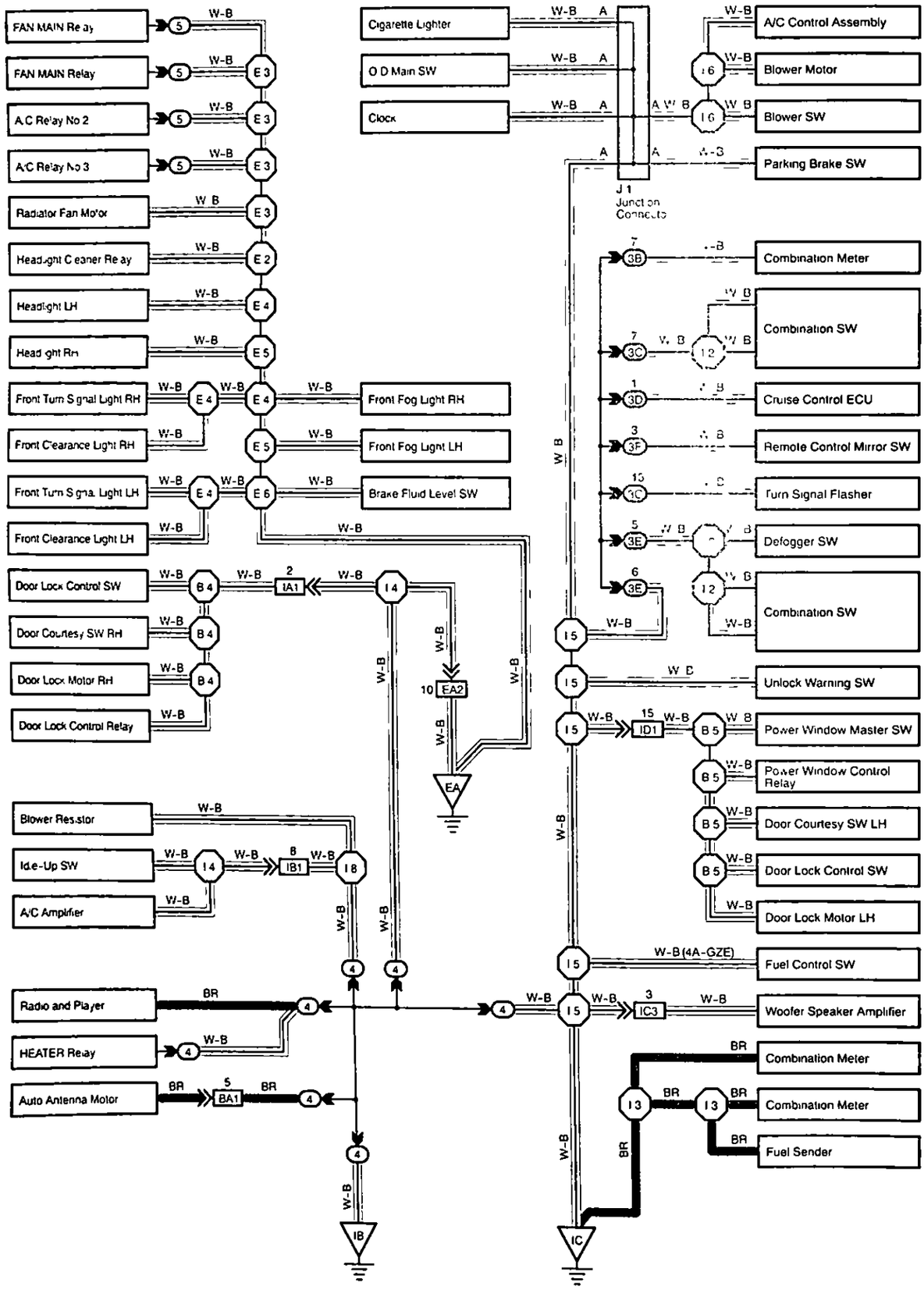

* The system shown here is an EXAMPLE ONLY. It is different to the actual circuit shown in the SYSTEM CIRCUITS SECTION.

The "Current Flow Chart" section, describes which parts each power source (fuses, fusible links, and circuit breakers) transmits current to. In the Power Source circuit diagram, the conditions when battery power is supplied to each system are explained. Since all System Circuit diagrams start from the power source, the power source system must be fully understood.

J POWER SOURCE (Current Flow Chart)

The chart below shows the route by which current flows from the battery to each electrical source (Fusible Link, Circuit Breaker, Fuse, etc.) and other parts.

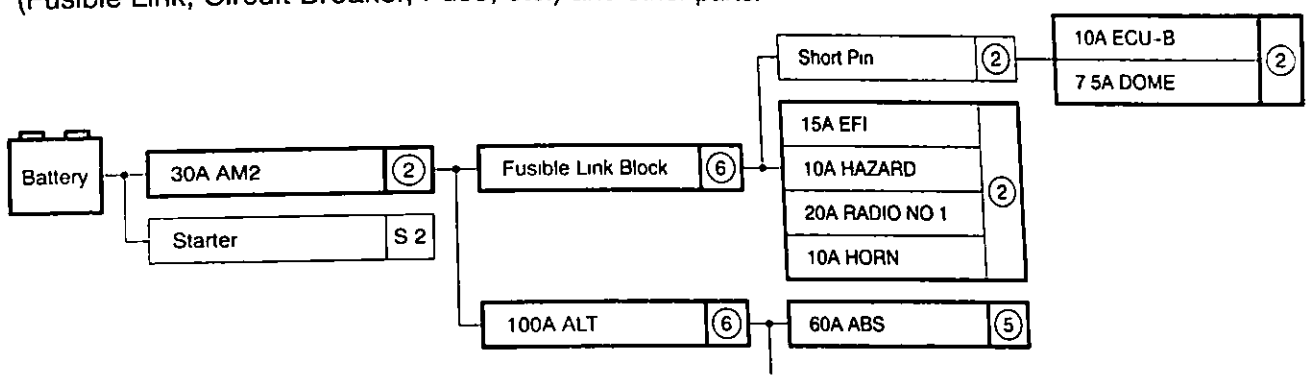

Engine Room R/B (See Page 20)

Fuse		System	Page
20A	STOP	ABS ABS and Traction Control Cruise Control Electronically Controlled Transmission Multiplex Communication System	194 187 180 166 210
10A	DOME	Cigarette Lighter Combination Meter Headlight Interior Light Key Reminder and Seat Belt Warning Light Auto Turn Off Theft Deterrent and Door L...	214 230 112 122

Power Source

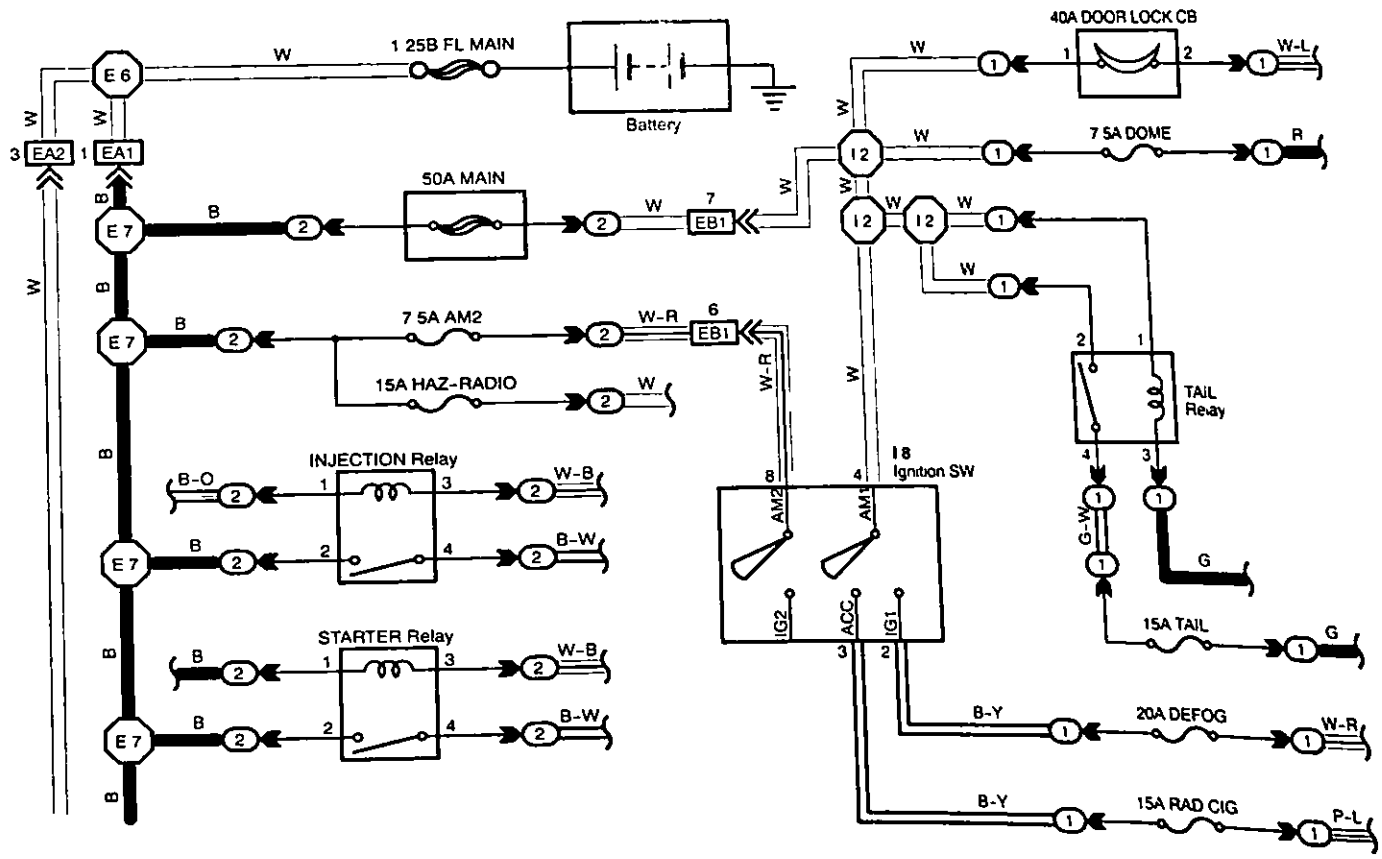

* The system shown here is an EXAMPLE ONLY. It is different to the actual circuit shown in the SYSTEM CIRCUITS SECTION.

K CONNECTOR LIST

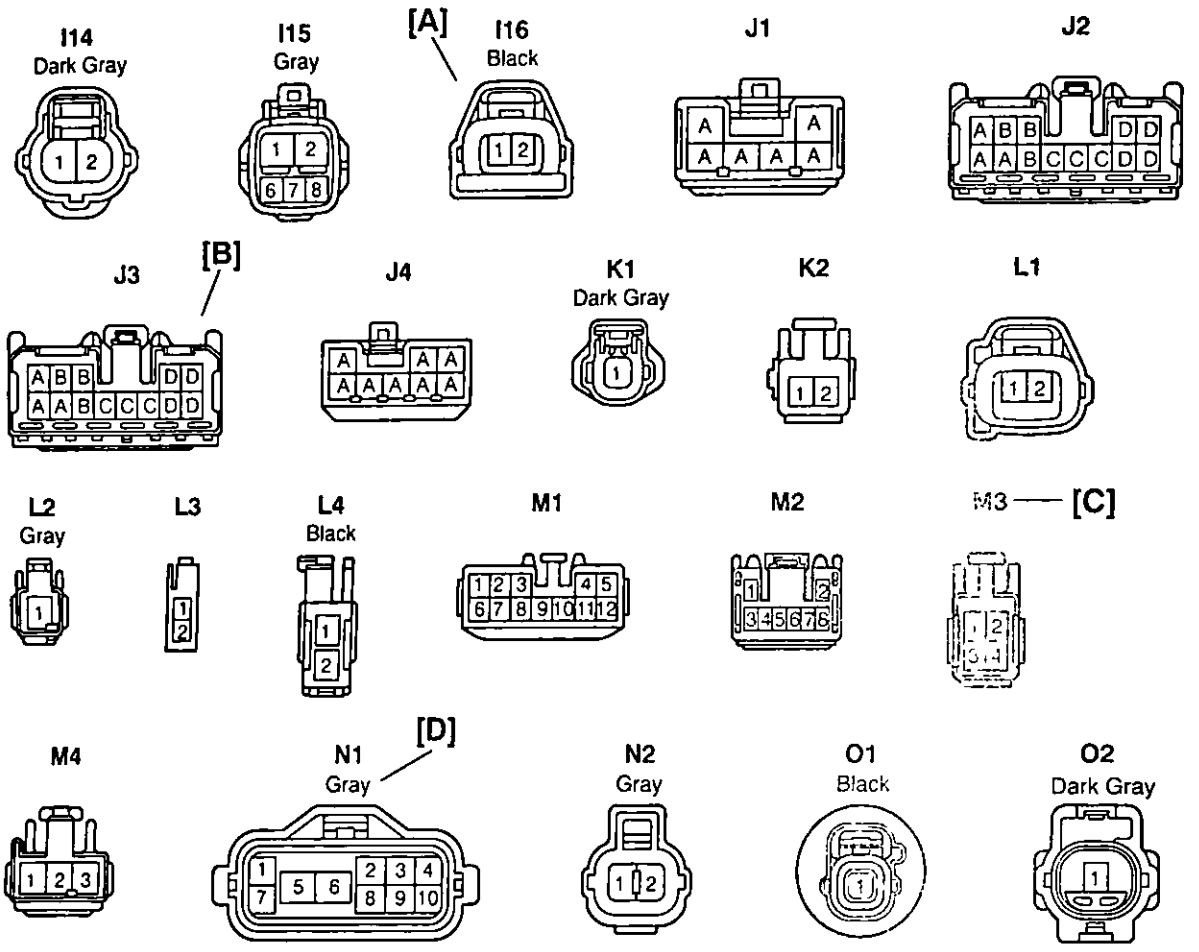

[A] : Indicates connector to be connected to a part. (The numeral indicates the pin No.)

[B] : Junction Connector
Indicates a connector which is connected to a short terminal.

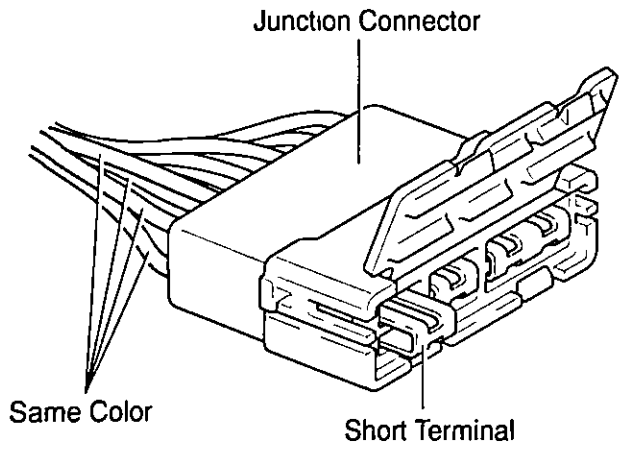

Junction connector in this manual include a short terminal which is connected to a number of wire harnesses. Always perform inspection with the short terminal installed. (When installing the wire harnesses, the harnesses can be connected to any position within the short terminal grouping. Accordingly, in other vehicles, the same position in the short terminal may be connected to a wire harness from a different part.)
Wire harness sharing the same short terminal grouping have the same color.

[C] : Parts Code
The first letter of the code is taken from the first letter of part, and the numbers indicates its order in parts which start with the same letter.

[D] : Connector Color
Connectors not indicated are milky white in color.

L PART NUMBER OF CONNECTORS

Code	Part Name	Part Number
A 1	A/C Ambient Temp Sensor	90980-11070
A 2	A/C Condenser Fan Motor	90980-11237
A 3	A/C Condenser Fan Relay	90980-10940
A 4	A/C Condenser Fan Resistor	90980-10928
A 5	A/C Magnetic Clutch	90980-11271
A 6	A/T Oil Temp. Sensor	90980-11413
[A]	ABS Actuat [B]	909- [C] 151
A 8	ABS Actuator	90980-11009
A 9	ABS Speed Sensor Front LH	90980-10941
A10	ABS Speed Sensor Front RH	90980-11002
A11	Airbag Sensor Front LH	90980-11856
A12	Airbag Sensor Front RH	
A13		90980-11194
		90980-11

Code	Part Name	Part Number
D 4	Diode (Courtesy)	90980-11608
D 5	Diode (Interior Light)	90980-10962
D 6	Diode (Moon Roof)	90980-11608
D 7	Door Lock Control Relay	90980-10848
D 8	Door Lock Control SW LH	90980-11148
D 9	Door Lock Control SW RH	
D10	Door Courtesy SW LH	90980-11097
D11	Door Courtesy SW RH	
D12	Door Courtesy SW Front LH	90980-11156
D13	Door Courtesy SW Front RH	
D14	Door Courtesy SW Rear LH	
D15	Door Courtesy SW Rear RH	
D16	end Unlock SW LH	90980-11170
	RH	

[A] : Part Code

[B] : Part Name

[C] : Part Number
Toyota Part Number are indicated.

Not all of the above part numbers of the connector are established for the supply. In case of ordering a connector or terminal with wire, please confirm in advance if there is supply for it using "Parts Catalog News" (published by Parts Engineering Administration Dept.).

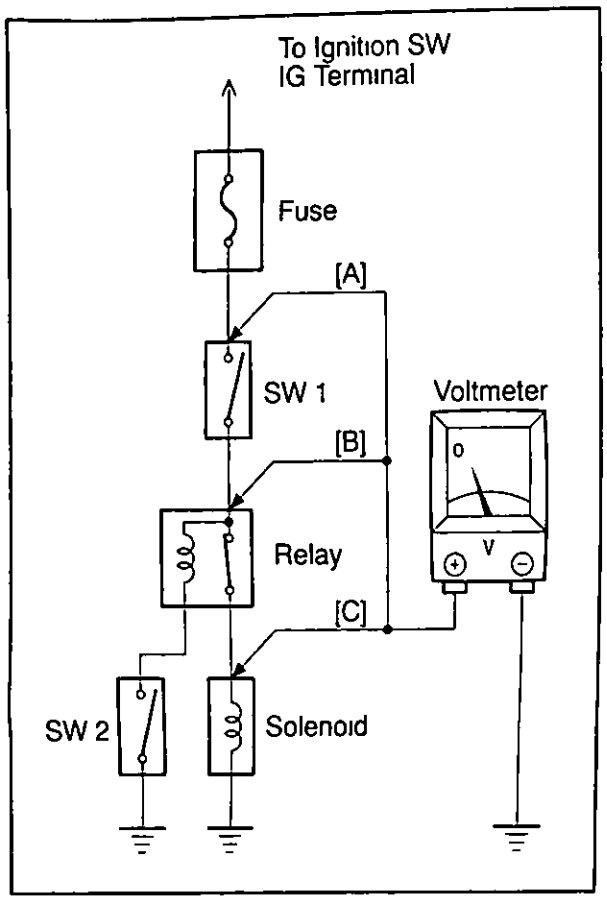

VOLTAGE CHECK

(a) Establish conditions in which voltage is present at the check point.

Example:
[A] - Ignition SW on
[B] - Ignition SW and SW 1 on
[C] - Ignition SW, SW 1 and Relay on (SW 2 off)

(b) Using a voltmeter, connect the negative lead to a good ground point or negative battery terminal, and the positive lead to the connector or component terminal.
This check can be done with a test light instead of a voltmeter.

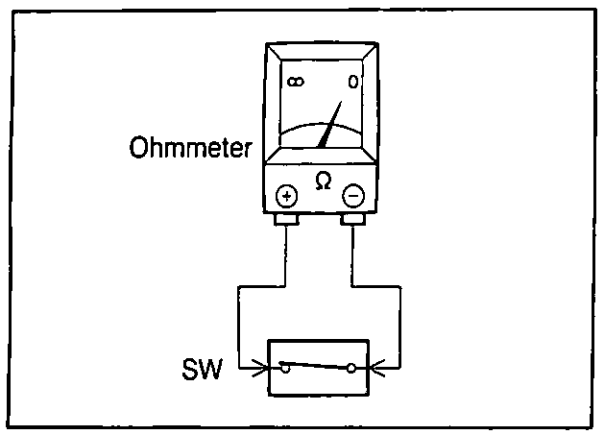

CONTINUITY AND RESISTANCE CHECK

(a) Disconnect the battery terminal or wire so there is no voltage between the check points

(b) Contact the two leads of an ohmmeter to each of the check points.

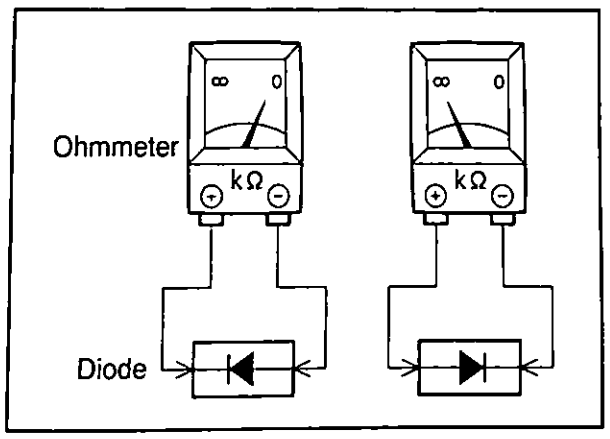

If the circuit has diodes, reverse the two leads and check again.
When contacting the negative lead to the diode positive side and the positive lead to the negative side, there should be continuity.
When contacting the two leads in reverse, there should be no continuity.

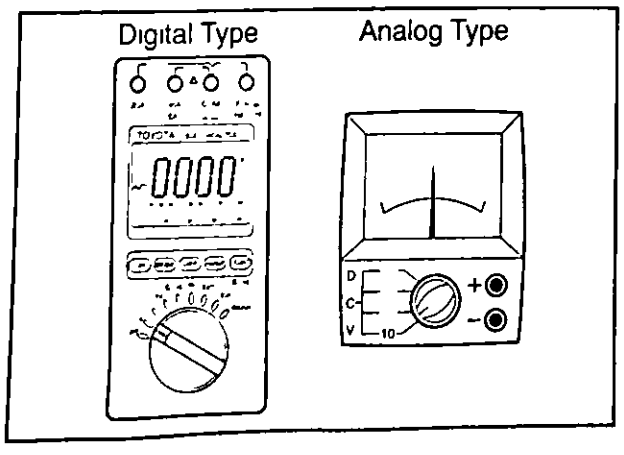

(c) Use a volt/ohmmeter with high impedance (10 kΩ/V minimum) for troubleshooting of the electrical circuit.

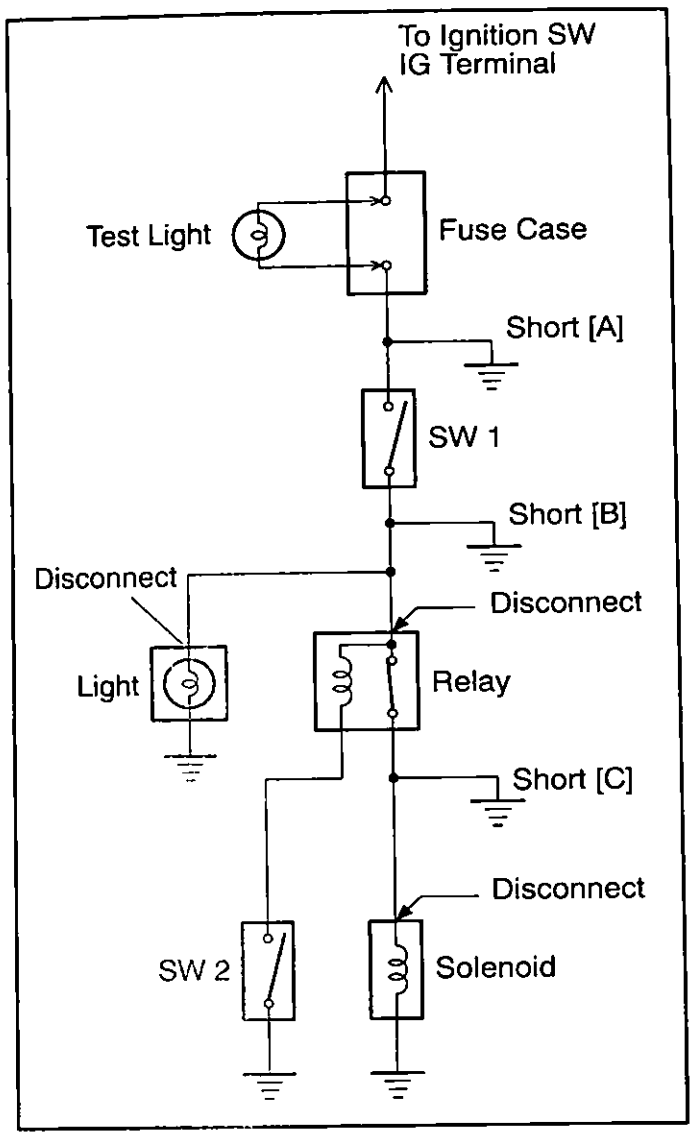

FINDING A SHORT CIRCUIT

(a) Remove the blown fuse and disconnect all loads of the fuse.

(b) Connect a test light in place of the fuse.

(c) Establish conditions in which the test light comes on.

Example:

[A] - Ignition SW on
[B] - Ignition SW and SW 1 on
[C] - Ignition SW, SW 1 and Relay on (Connect the Relay) and SW 2 off (or Disconnect SW 2)

(d) Disconnect and reconnect the connectors while watching the test light.
The short lies between the connector where the test light stays lit and the connector where the light goes out.

(e) Find the exact location of the short by lightly shaking the problem wire along the body.

CAUTION:

(a) Do not open the cover or the case of the ECU unless absolutely necessary. (If the IC terminals are touched, the IC may be destroyed by static electricity.)

(b) When replacing the internal mechanism (ECU part) of the digital meter, be careful that no part of your body or clothing comes in contact with the terminals of leads from the IC, etc. of the replacement part (spare part).

DISCONNECTION OF MALE AND FEMALE CONNECTORS

To pull apart the connectors, pull on the connector itself, not the wire harness.

HINT : Check to see what kind of connector you are disconnecting before pulling apart.

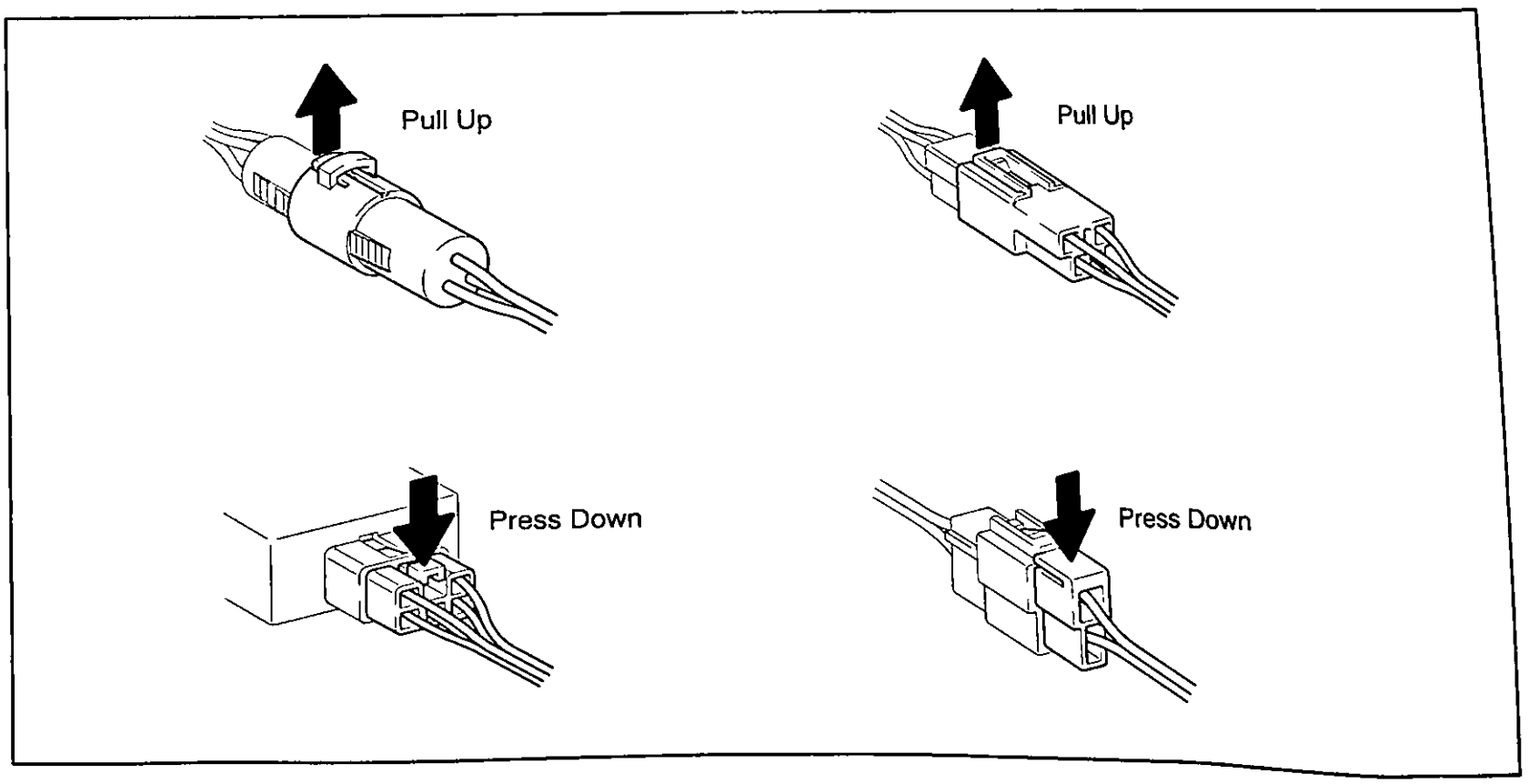

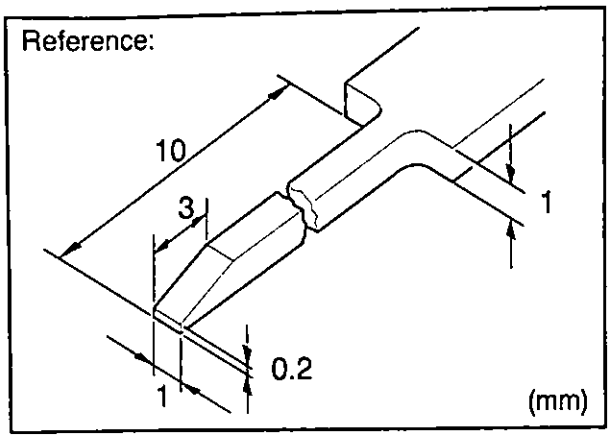

HOW TO REPLACE TERMINAL (with terminal retainer or secondary locking device)

1. PREPARE THE SPECIAL TOOL

   HINT : To remove the terminal from the connector, please construct and use the special tool or like object shown on the left.

2. DISCONNECT CONNECTOR

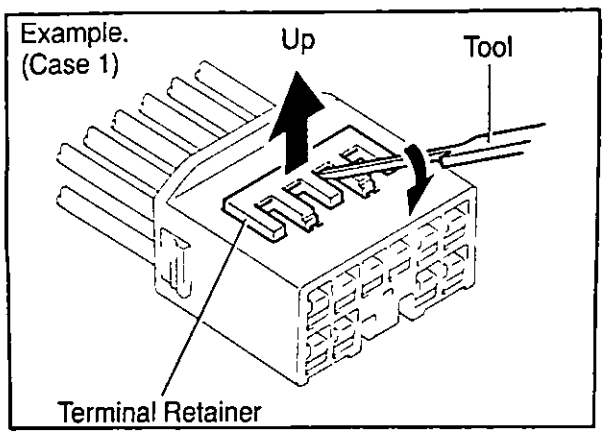

3. DISENGAGE THE SECONDARY LOCKING DEVICE OR TERMINAL RETAINER.

   (a) Locking device must be disengaged before the terminal locking clip can be released and the terminal removed from the connector.

   (b) Use a special tool or the terminal pick to unlock the secondary locking device or terminal retainer.

   NOTICE:
   Do not remove the terminal retainer from connector body.

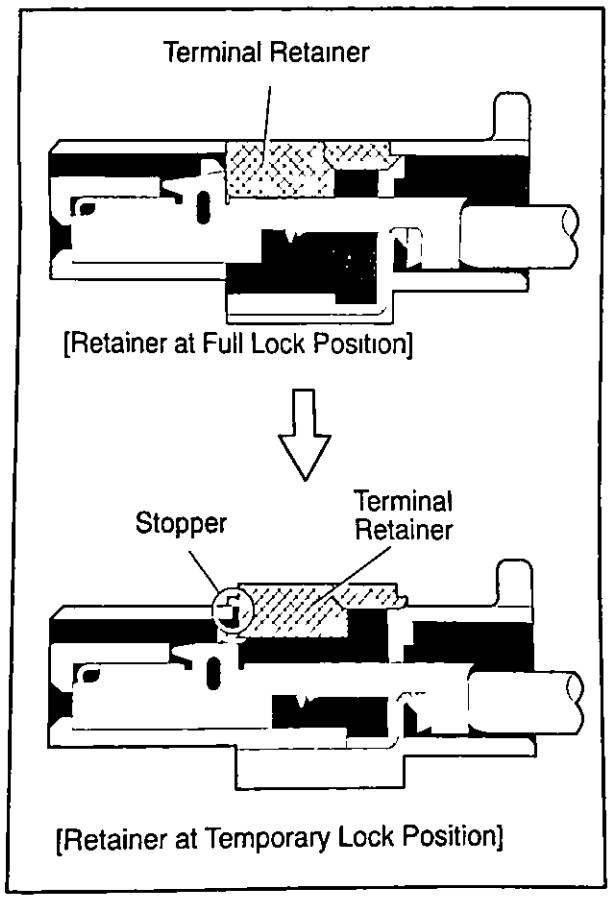

[A] For Non-Waterproof Type Connector

HINT : The needle insertion position varies according to the connector's shape (number of terminals etc.), so check the position before inserting it.

"Case 1"

Raise the terminal retainer up to the temporary lock position.

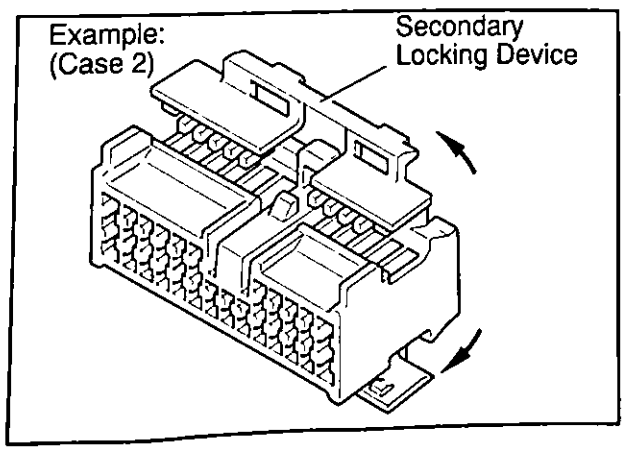

"Case 2"

Open the secondary locking device.

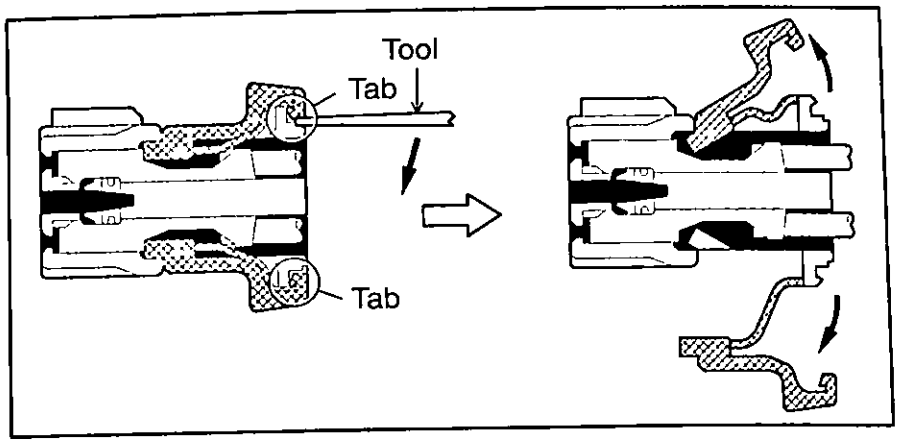

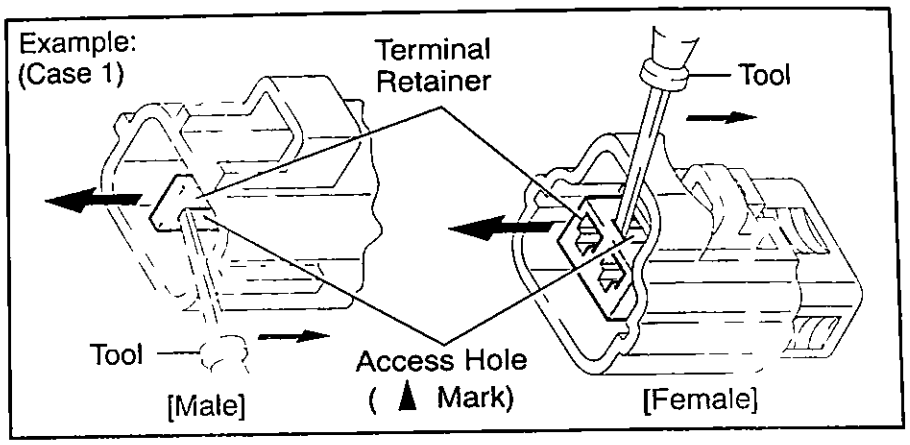

[B] For Waterproof Type Connector

HINT : Terminal retainer color is different according to connector body.

Example:

Terminal Retainer	: Connector Body
Black or White	: Gray
Black or White	: Dark Gray
Gray or White	: Black

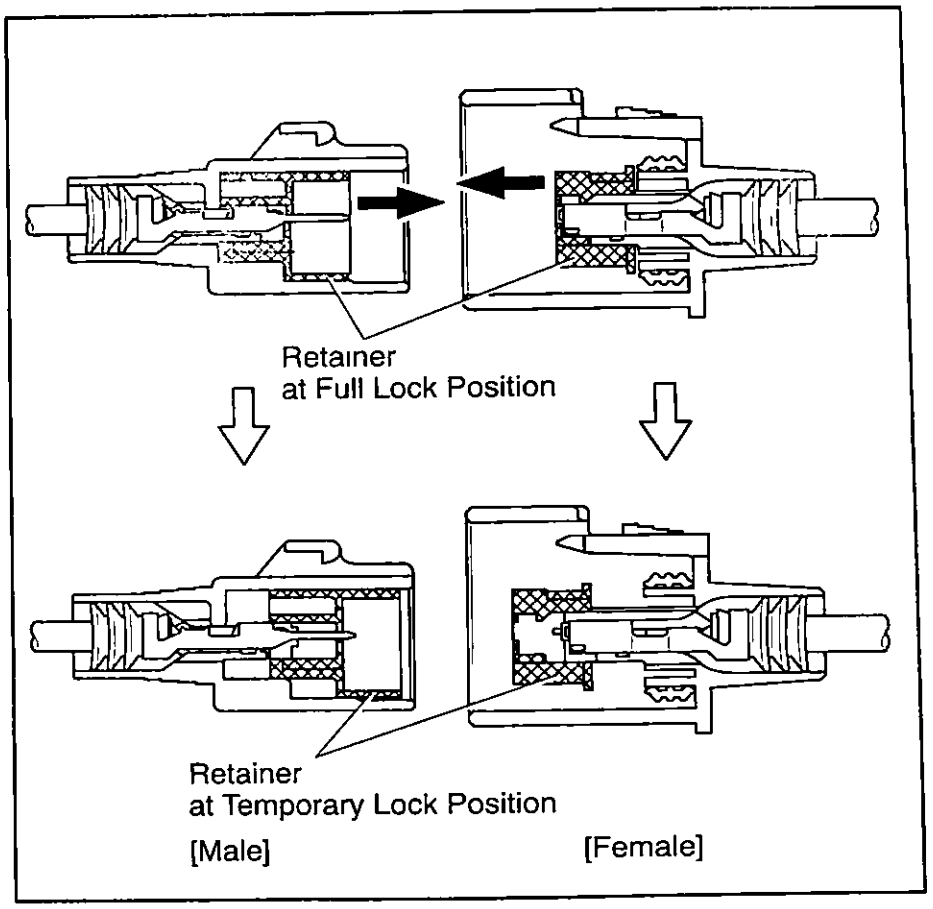

"Case 1"

Type where terminal retainer is pulled up to the temporary lock position (Pull Type).

Insert the special tool into the terminal retainer access hole (▲Mark) and pull the terminal retainer up to the temporary lock position.

HINT : The needle insertion position varies according to the connector's shape (Number of terminals etc.), so check the position before inserting it.

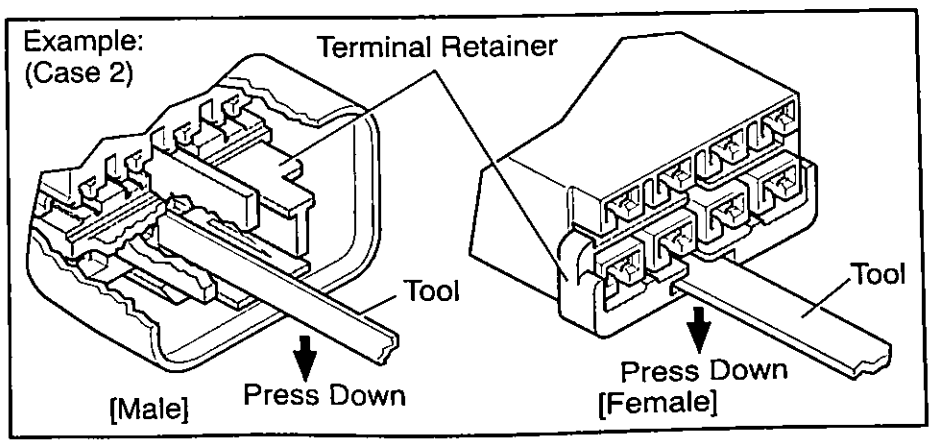

"Case 2"

Type which cannot be pulled as far as Power Lock insert the tool straight into the access hole of terminal retainer as shown.

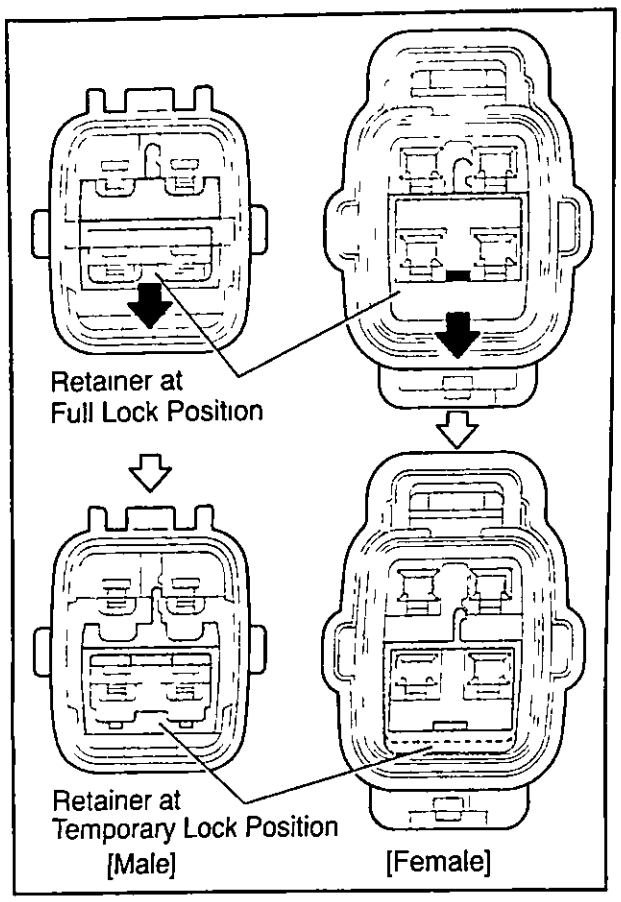

Push the terminal retainer down to the temporary lock position.

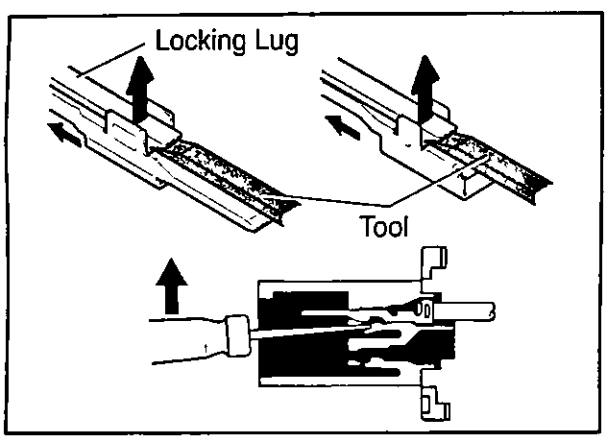

(c) Release the locking lug from terminal and pull the terminal out from rear.

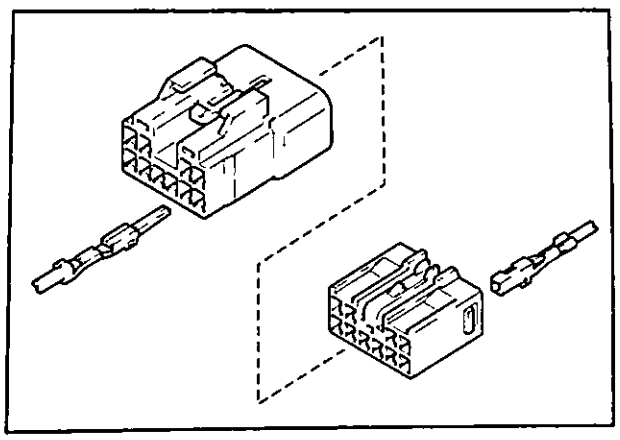

4. INSTALL TERMINAL TO CONNECTOR

(a) Insert the terminal.

HINT:
1. Make sure the terminal is positioned correctly.
2. Insert the terminal until the locking lug locks firmly.
3. Insert the terminal with terminal retainer in the temporary lock position.

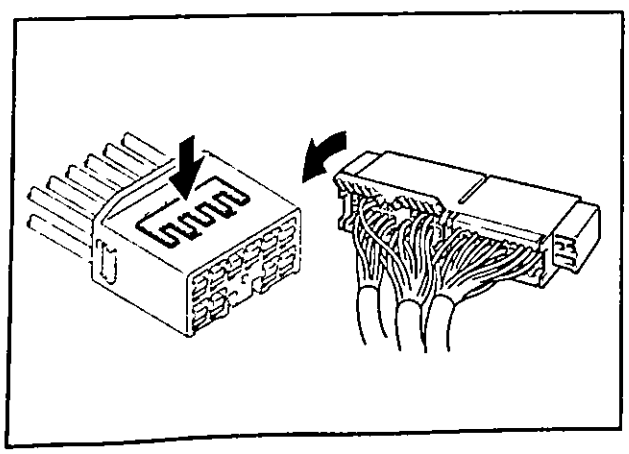

(b) Push the secondary locking device or terminal retainer in to the full lock position.

5. CONNECT CONNECTOR

ABBREVIATIONS

The following abbreviations are used in this manual.

A/C	=	Air Conditioning
A/T	=	Automatic Transmission
ABS	=	Anti-Lock Brake System
ACIS	=	Acoustic Control Induction System
BA	=	Brake Assist
DIFF.	=	Differential
DVD	=	Digital Versatile Disc
EC	=	Electrochromic
ECU	=	Electronic Control Unit
ESA	=	Electronic Spark Advance
ETCS-i	=	Electronic Throttle Control System-intelligent
EVAP	=	Evaporative Emission
IC	=	Integrated Circuit
J/B	=	Junction Block
LH	=	Left-Hand
R/B	=	Relay Block
RH	=	Right-Hand
SFI	=	Sequential Multiport Fuel Injection
SRS	=	Supplemental Restraint System
SW	=	Switch
TEMP.	=	Temperature
TRAC	=	Traction Control
VSC	=	Vehicle Skid Control
VSV	=	Vacuum Switching Valve
w/	=	With
w/o	=	Without

* The titles given inside the components are the names of the terminals (terminal codes) and are not treated as being abbreviations.

E GLOSSARY OF TERMS AND SYMBOLS

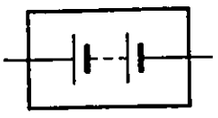

BATTERY
Stores chemical energy and converts it into electrical energy. Provides DC current for the auto's various electrical circuits.

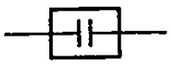

CAPACITOR (Condenser)
A small holding unit for temporary storage of electrical voltage.

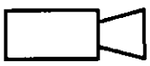

CIGARETTE LIGHTER
An electric resistance heating element.

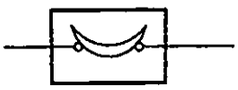

CIRCUIT BREAKER
Basically a reusable fuse, a circuit breaker will heat and open if too much current flows through it. Some units automatically reset when cool, others must be manually reset.

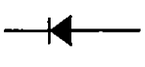

DIODE
A semiconductor which allows current flow in only one direction.

DIODE, ZENER
A diode which allows current flow in one direction but blocks reverse flow only up to a specific voltage. Above that potential, it passes the excess voltage This acts as a simple voltage regulator.

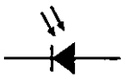

PHOTODIODE
The photodiode is a semiconductor which controls the current flow according to the amount of light.

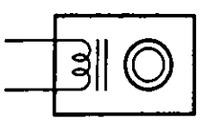

DISTRIBUTOR, IIA
Channels high-voltage current from the ignition coil to the individual spark plugs.

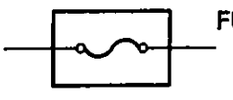

FUSE
A thin metal strip which burns through when too much current flows through it, thereby stopping current flow and protecting a circuit from damage

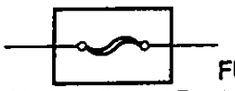

(for Medium Current Fuse)

FUSIBLE LINK
A heavy-gauge wire placed in high amperage circuits which burns through on overloads, thereby protecting the circuit. The numbers indicate the crosssection surface area of the wires

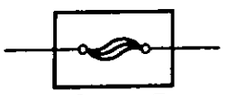

(for High Current Fuse or Fusible Link)

GROUND
The point at which wiring attaches to the Body, thereby providing a return path for an electrical circuit; without a ground, current cannot flow.

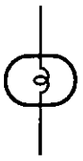

HEADLIGHTS
1. SINGLE FILAMENT
2. DOUBLE FILAMENT
Current flow causes a headlight filament to heat up and emit light. A headlight may have either a single (1) filament or a double (2) filament

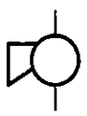

HORN
An electric device which sounds a loud audible signal.

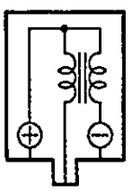

IGNITION COIL
Converts low-voltage DC current into high-voltage ignition current for firing the spark plugs.

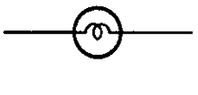

LIGHT
Current flow through a filament causes the filament to heat up and emit light.

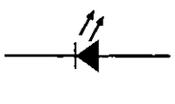

LED (LIGHT EMITTING DIODE)
Upon current flow, these diodes emit light without producing the heat of a comparable light.

METER, ANALOG
Current flow activates a magnetic coil which causes a needle to move, thereby providing a relative display against a background calibration.

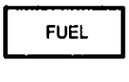

METER, DIGITAL
Current flow activates one or many LED's, LCD's, or fluorescent displays, which provide a relative or digital display.

MOTOR
A power unit which converts electrical energy into mechanical energy, especially rotary motion.

RELAY

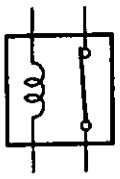

1. NORMALLY CLOSED

Basically, an electrically operated switch which may be normally closed (1) or open (2).
Current flow through a small coil creates a magnetic field which either opens or closes an attached switch.

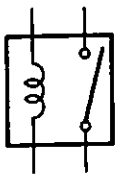

2. NORMALLY OPEN

RELAY, DOUBLE THROW

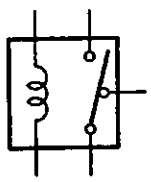

A relay which passes current through one set of contacts or the other.

RESISTOR

An electrical component with a fixed resistance, placed in a circuit to reduce voltage to a specific value.

RESISTOR, TAPPED

A resistor which supplies two or more different non adjustable resistance values.

RESISTOR, VARIABLE or RHEOSTAT

A controllable resistor with a variable rate of resistance.
Also called a potentiometer or rheostat.

SENSOR (Thermistor)

A resistor which varies its resistance with temperature.

SENSOR, SPEED

(Reed Switch Type)

Uses magnetic impulses to open and close a switch to create a signal for activation of other components.

SHORT PIN

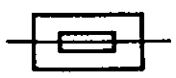

Used to provide an unbroken connection within a junction block.

SOLENOID

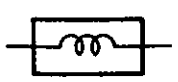

An electromagnetic coil which forms a magnetic field when current flows, to move a plunger, etc.

SPEAKER

An electromechanical device which creates sound waves from current flow.

SWITCH, MANUAL

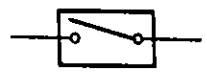

1. NORMALLY OPEN

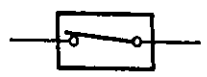

2. NORMALLY CLOSED

Opens and closes circuits, thereby stopping (1) or allowing (2) current flow.

SWITCH, DOUBLE THROW

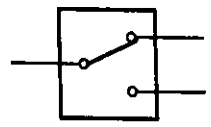

A switch which continuously passes current through one set of contacts or the other.

SWITCH, IGNITION

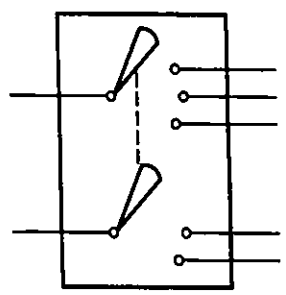

A key operated switch with several positions which allows various circuits, particularly the primary ignition circuit, to become operational.

SWITCH, WIPER PARK

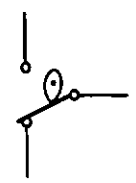

Automatically returns wipers to the stop position when the wiper switch is turned off.

TRANSISTOR

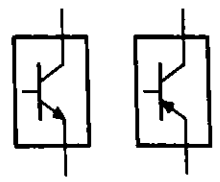

A solidstate device typically used as an electronic relay; stops or passes current depending on the voltage applied at "base".

WIRES

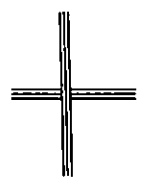

(1) NOT CONNECTED

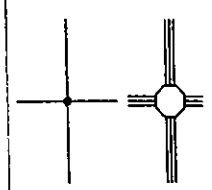

(2) SPLICED

Wires are always drawn as straight lines on wiring diagrams.
Crossed wires (1) without a black dot at the junction are not joined;
crossed wires (2) with a black dot or octagonal (⬡) mark at the junction are spliced (joined) connections.

F RELAY LOCATIONS

[Engine Compartment]

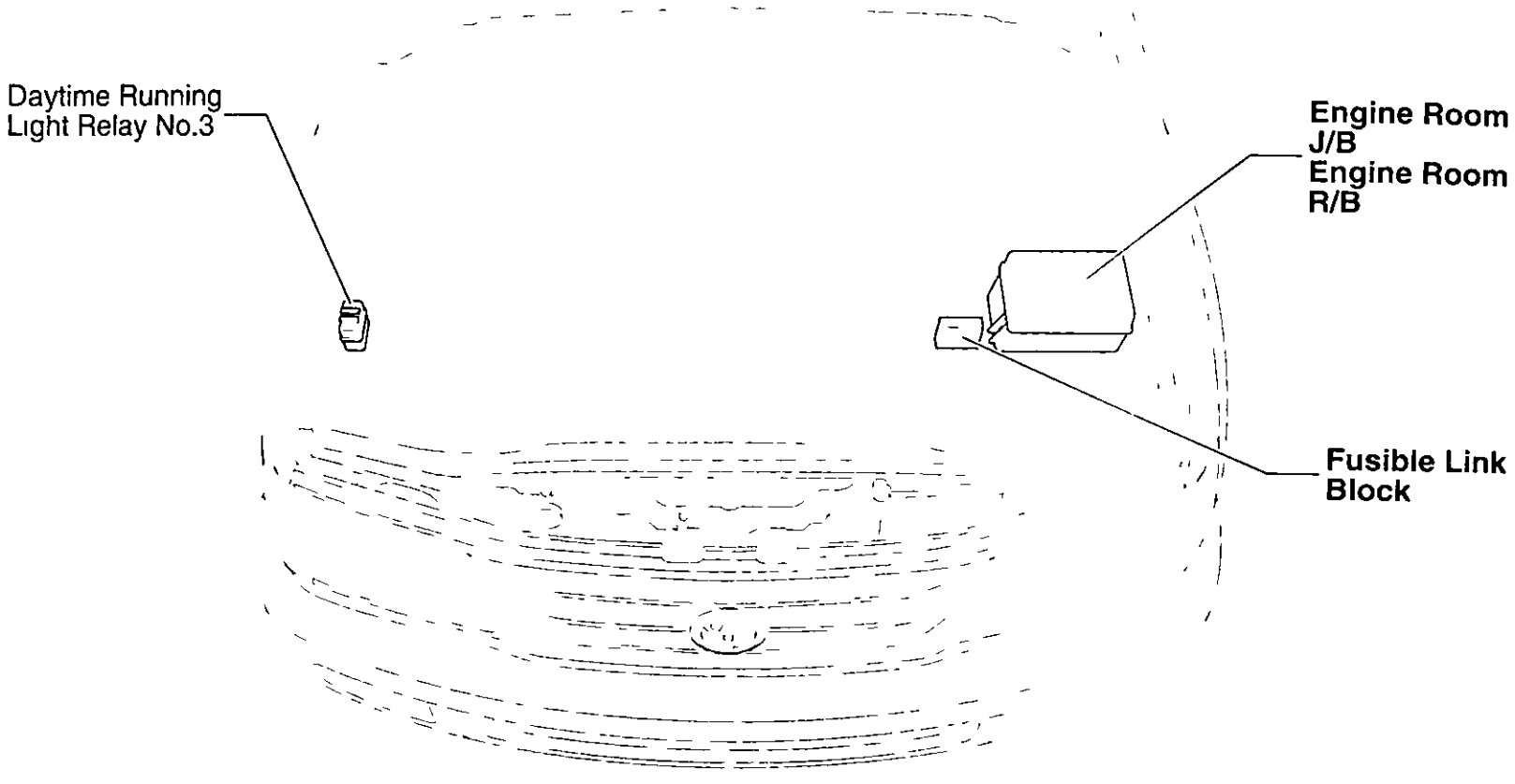

[Instrument Panel]

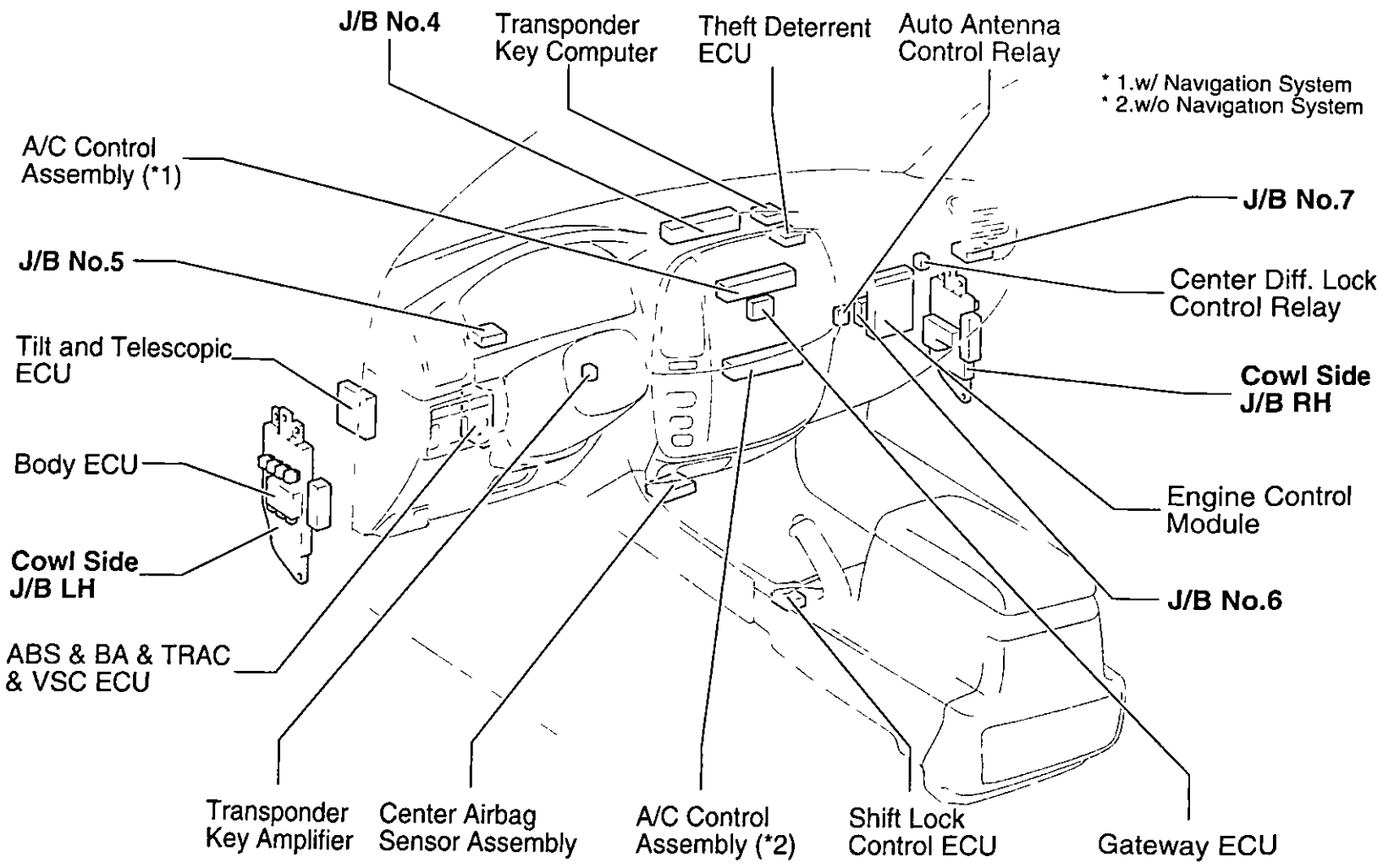

[Body]

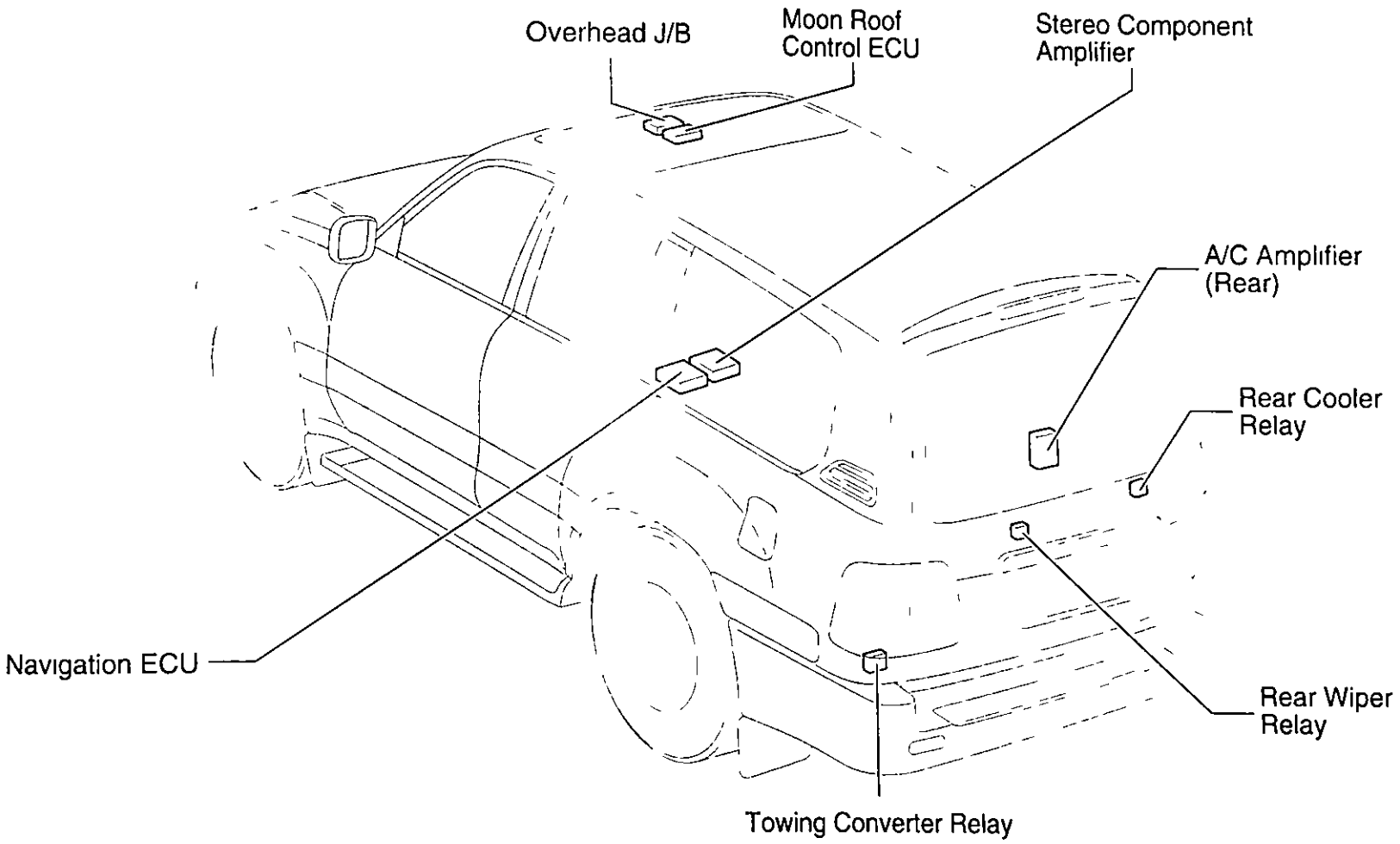
Overhead J/B
Moon Roof Control ECU
Stereo Component Amplifier
A/C Amplifier (Rear)
Rear Cooler Relay
Navigation ECU
Rear Wiper Relay
Towing Converter Relay

F RELAY LOCATIONS

⬭ : Engine Room J/B ① : Engine Room R/B	Engine Compartment Left (See Page 20)

(Inner Circuit : See Page 26)

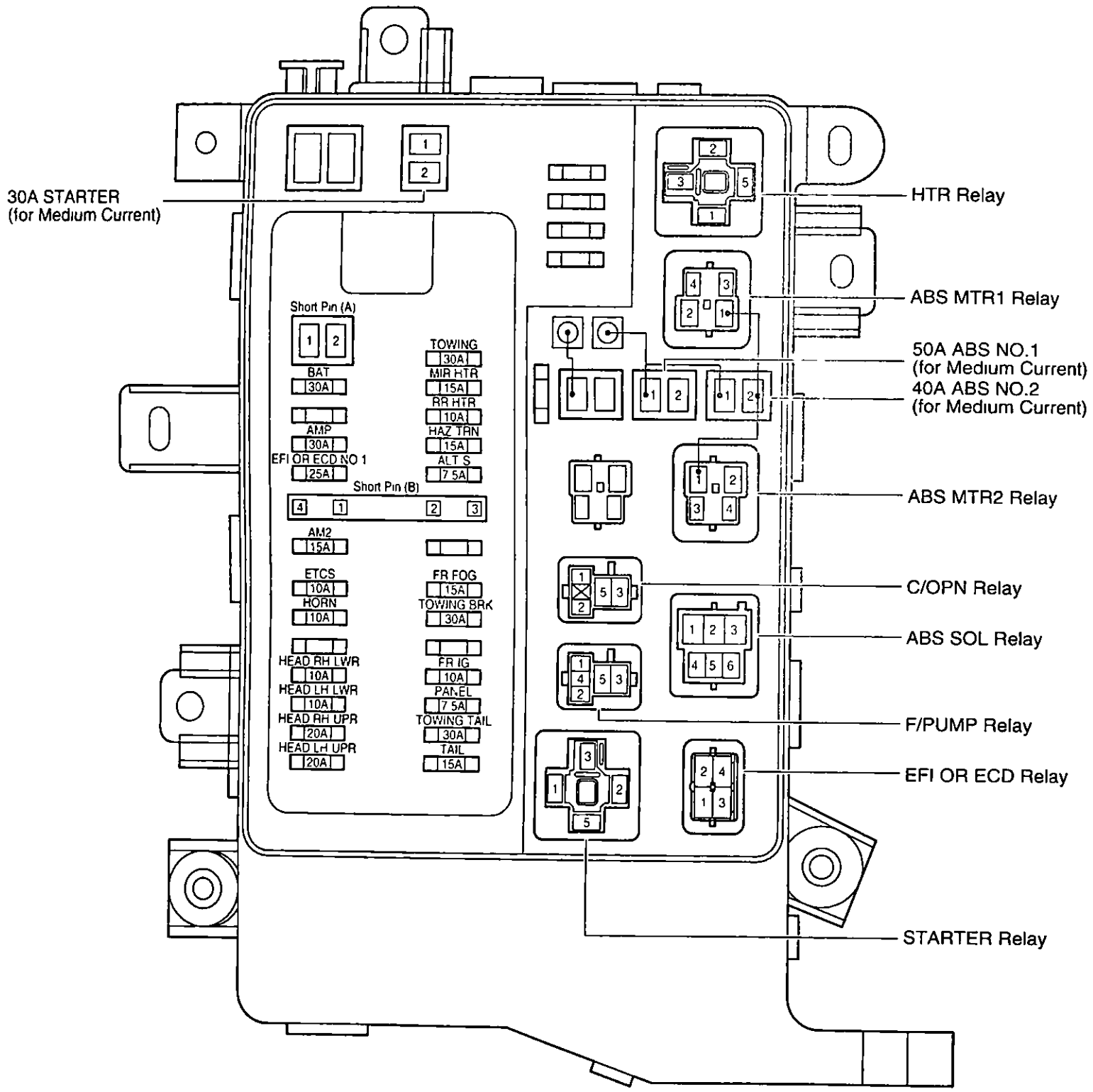

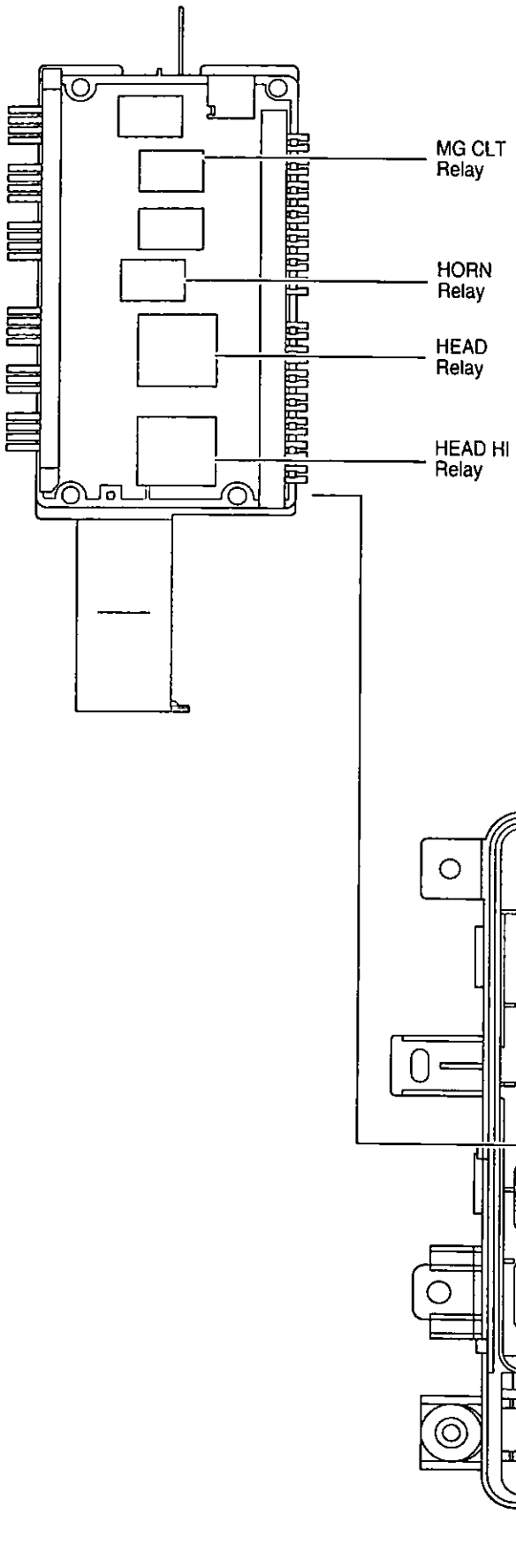
MG CLT
Relay
HORN
Relay
HEAD
Relay
HEAD HI
Relay

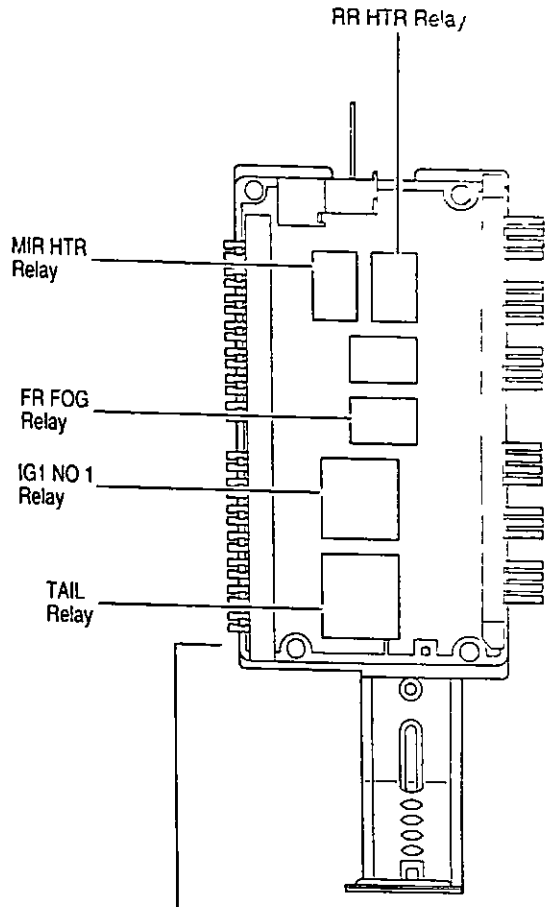
RR HTR Relay
MIR HTR
Relay
FR FOG
Relay
IG1 NO 1
Relay
TAIL
Relay

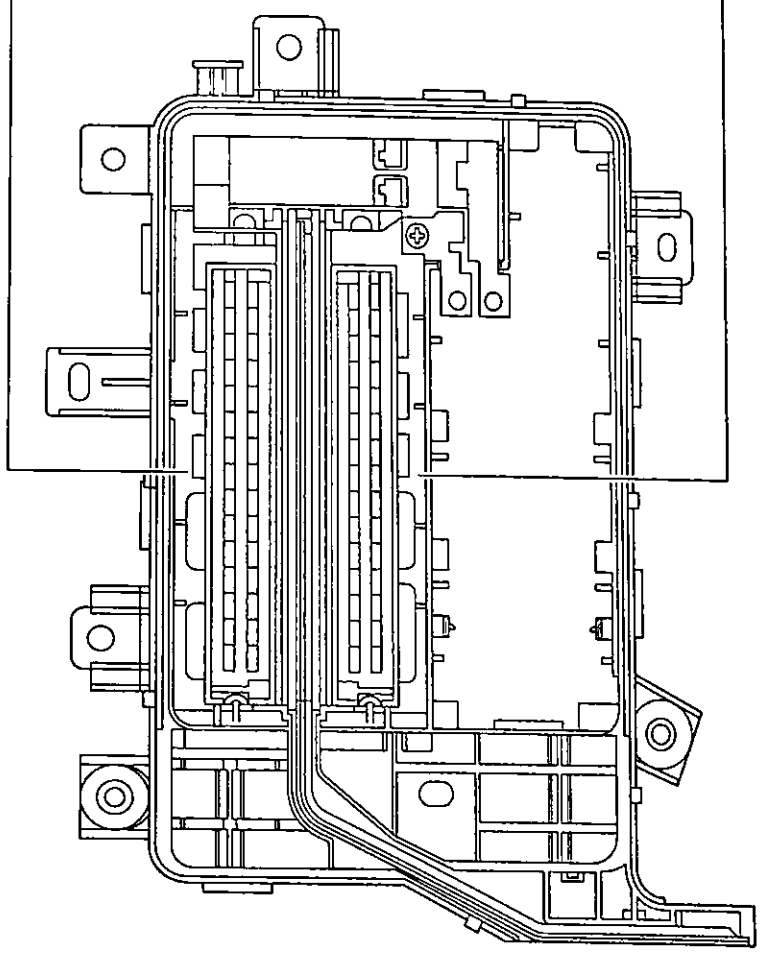

F RELAY LOCATIONS

⬭ : Engine Room J/B	Engine Compartment Left (See Page 20)

(Inner Circuit : See Page 26)

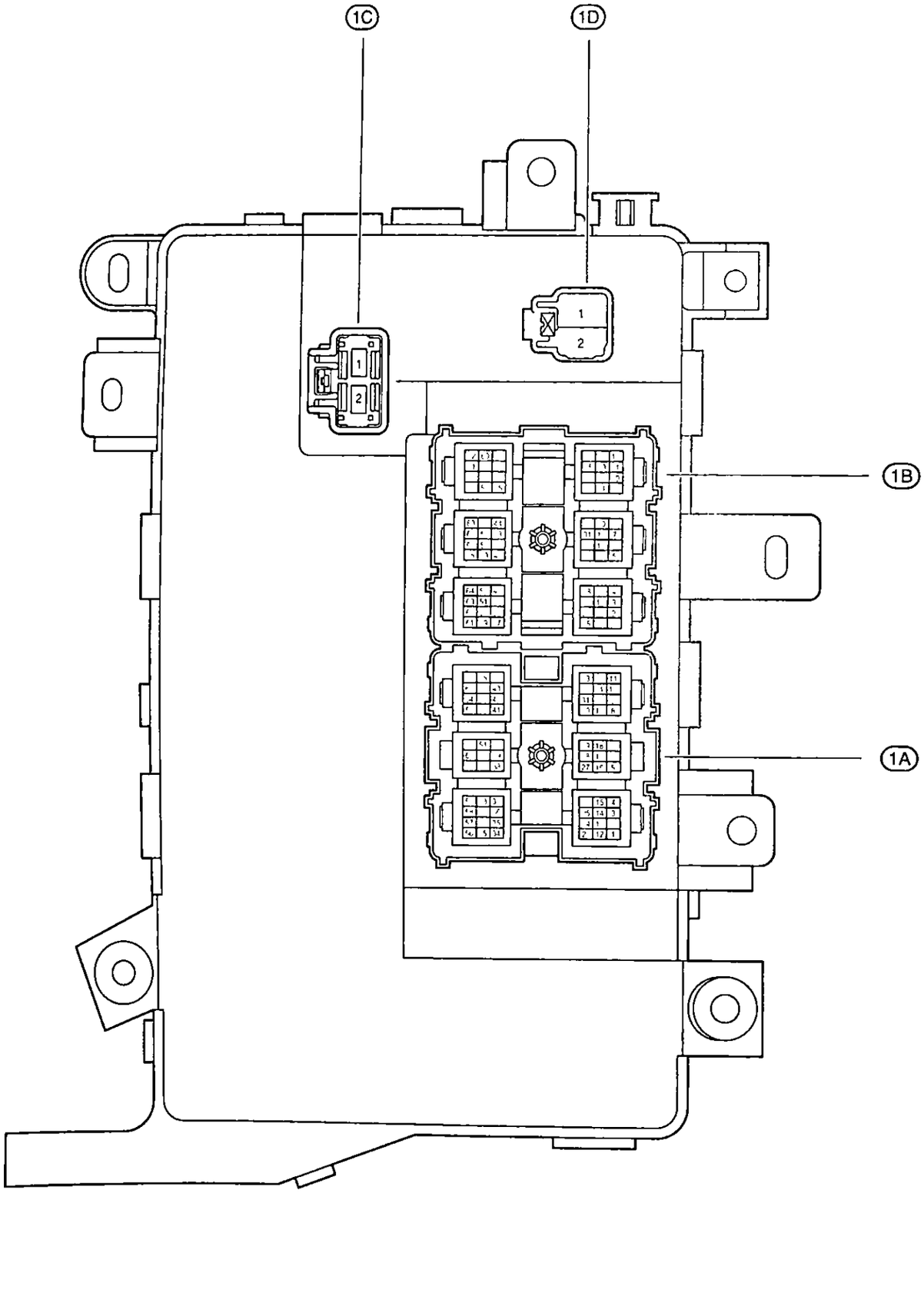

(1A)

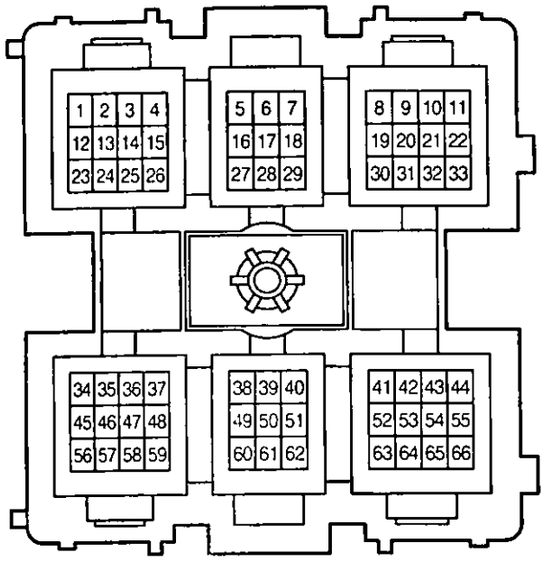

(from Engine Room Main Wire)

(1B)

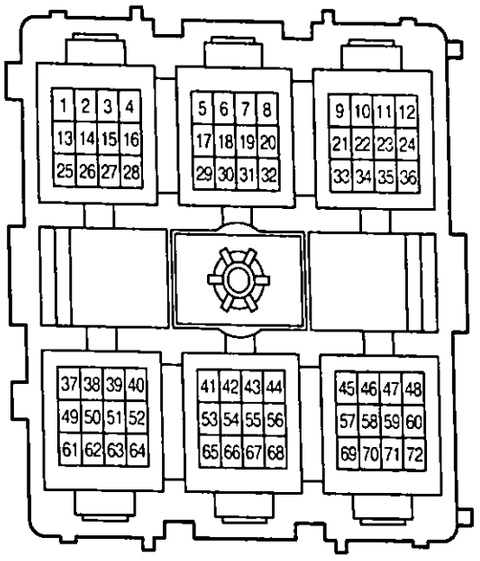

(from Engine Room No 2 Wire)

(1C)
Black

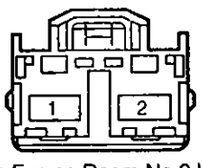

(from Engine Room No 2 Wire)

(1D)

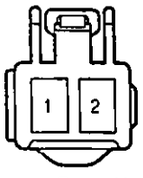

(from Engine Room No 2 Wire)

F RELAY LOCATIONS

[Engine Room J/B Inner Circuit]

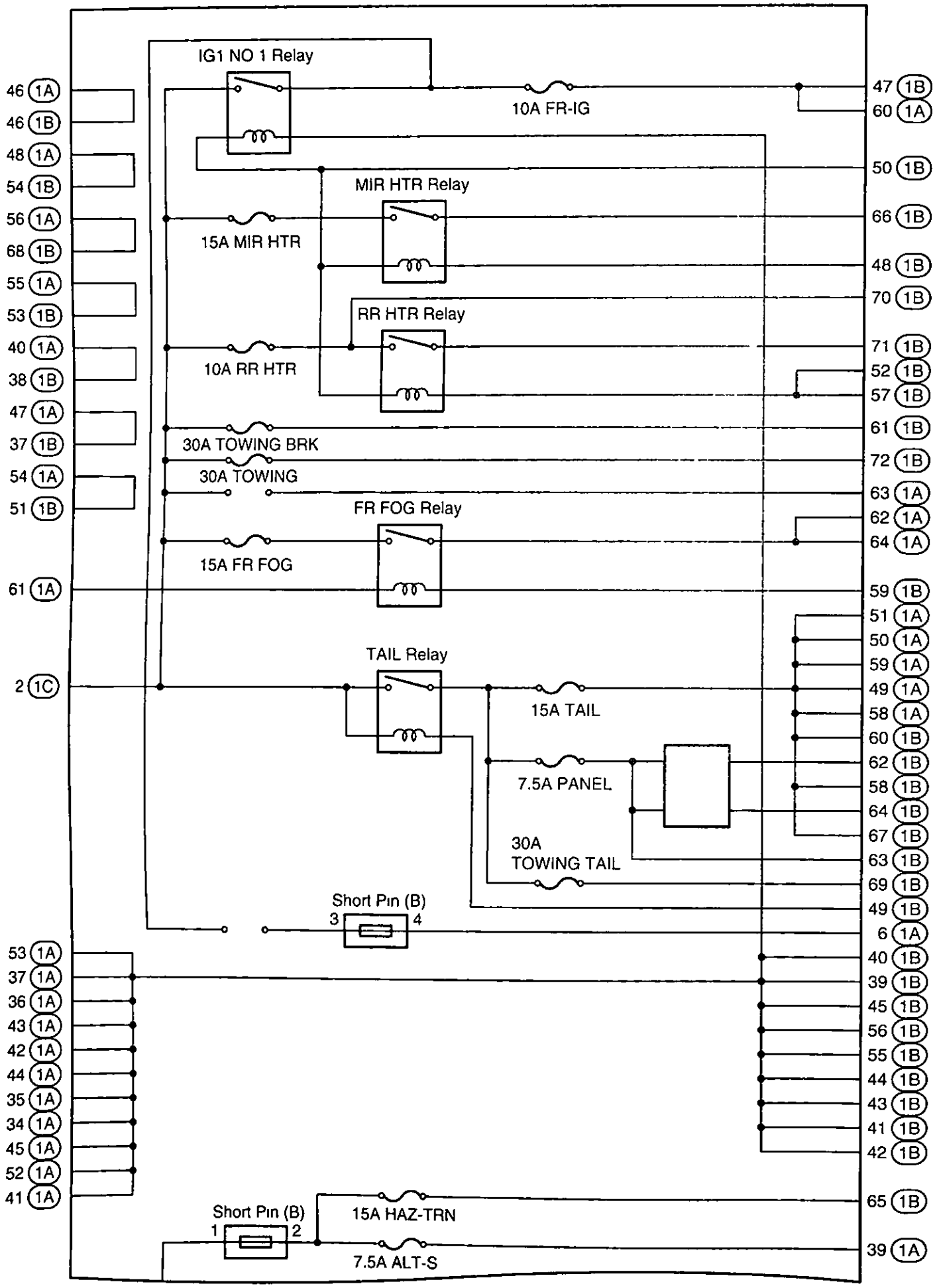

(Cont. next page)

(Cont'd)

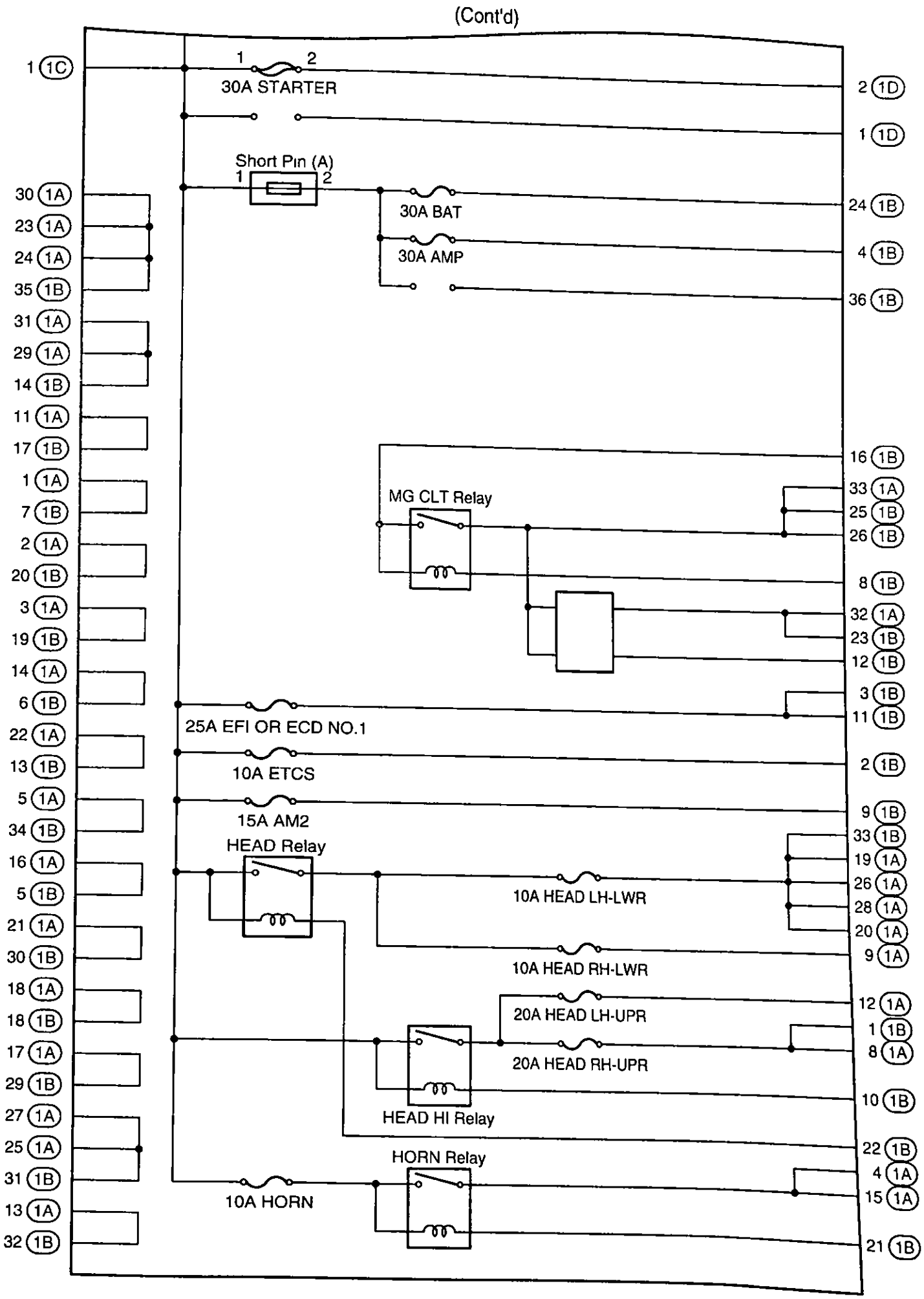
1 1C
1
2
30A STARTER
2 1D
1 1D
Short Pin (A)
1
2
30 1A
23 1A
24 1A
35 1B
30A BAT
24 1B
30A AMP
4 1B
36 1B
31 1A
29 1A
14 1B
11 1A
17 1B
1 1A
7 1B
2 1A
20 1B
3 1A
19 1B
14 1A
6 1B
22 1A
13 1B
5 1A
34 1B
16 1A
5 1B
21 1A
30 1B
18 1A
18 1B
17 1A
29 1B
27 1A
25 1A
31 1B
13 1A
32 1B
16 1B
MG CLT Relay
33 1A
25 1B
26 1B
8 1B
32 1A
23 1B
12 1B
3 1B
11 1B
25A EFI OR ECD NO.1
10A ETCS
2 1B
15A AM2
9 1B
HEAD Relay
33 1B
19 1A
10A HEAD LH-LWR
26 1A
28 1A
20 1A
10A HEAD RH-LWR
9 1A
20A HEAD LH-UPR
12 1A
1 1B
20A HEAD RH-UPR
8 1A
HEAD HI Relay
10 1B
22 1B
HORN Relay
4 1A
10A HORN
15 1A
21 1B

F RELAY LOCATIONS

⬭ : Cowl Side J/B LH	Left Kick Panel (See Page 20)

(Inner Circuit : See Page 34)

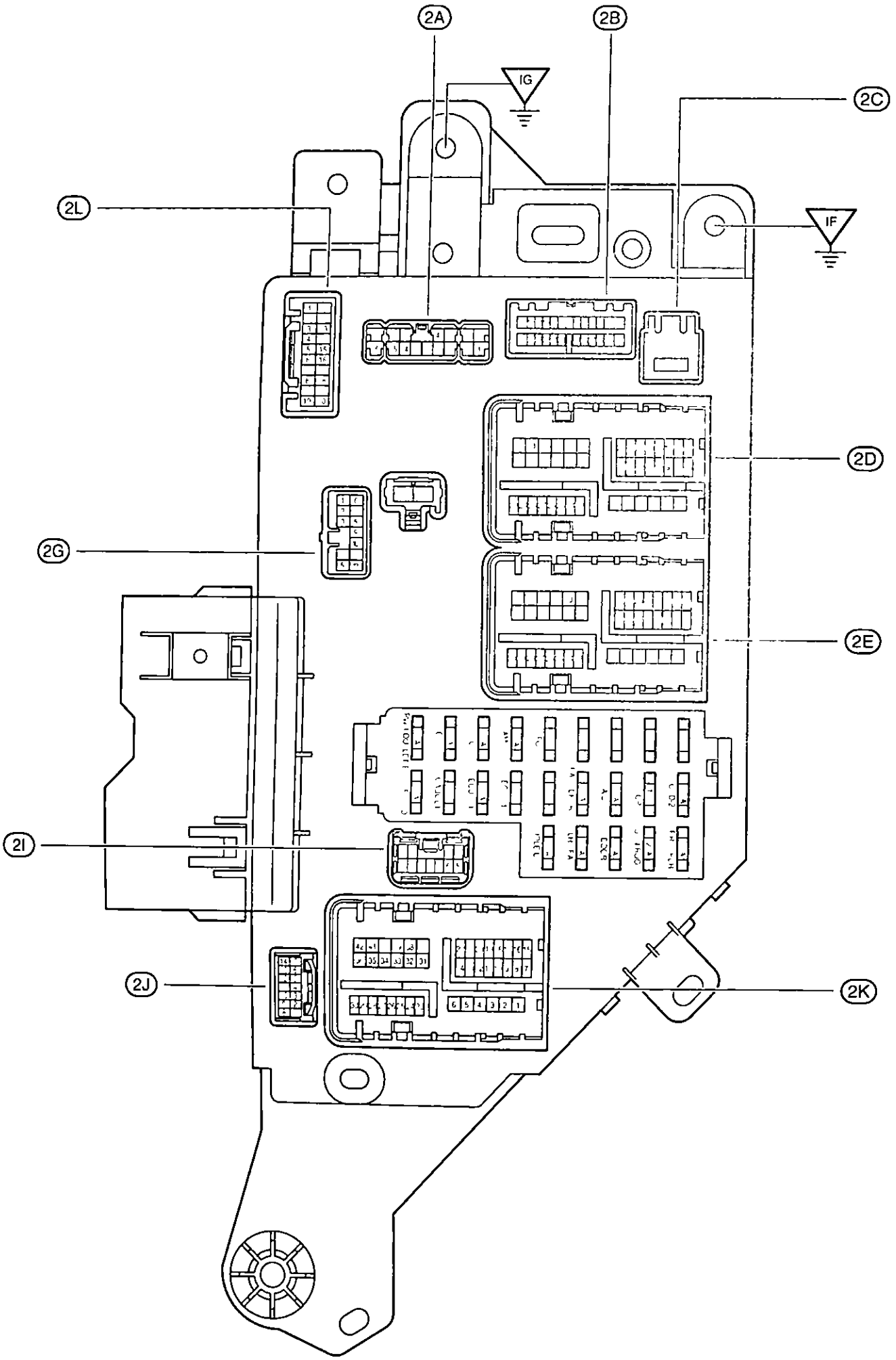

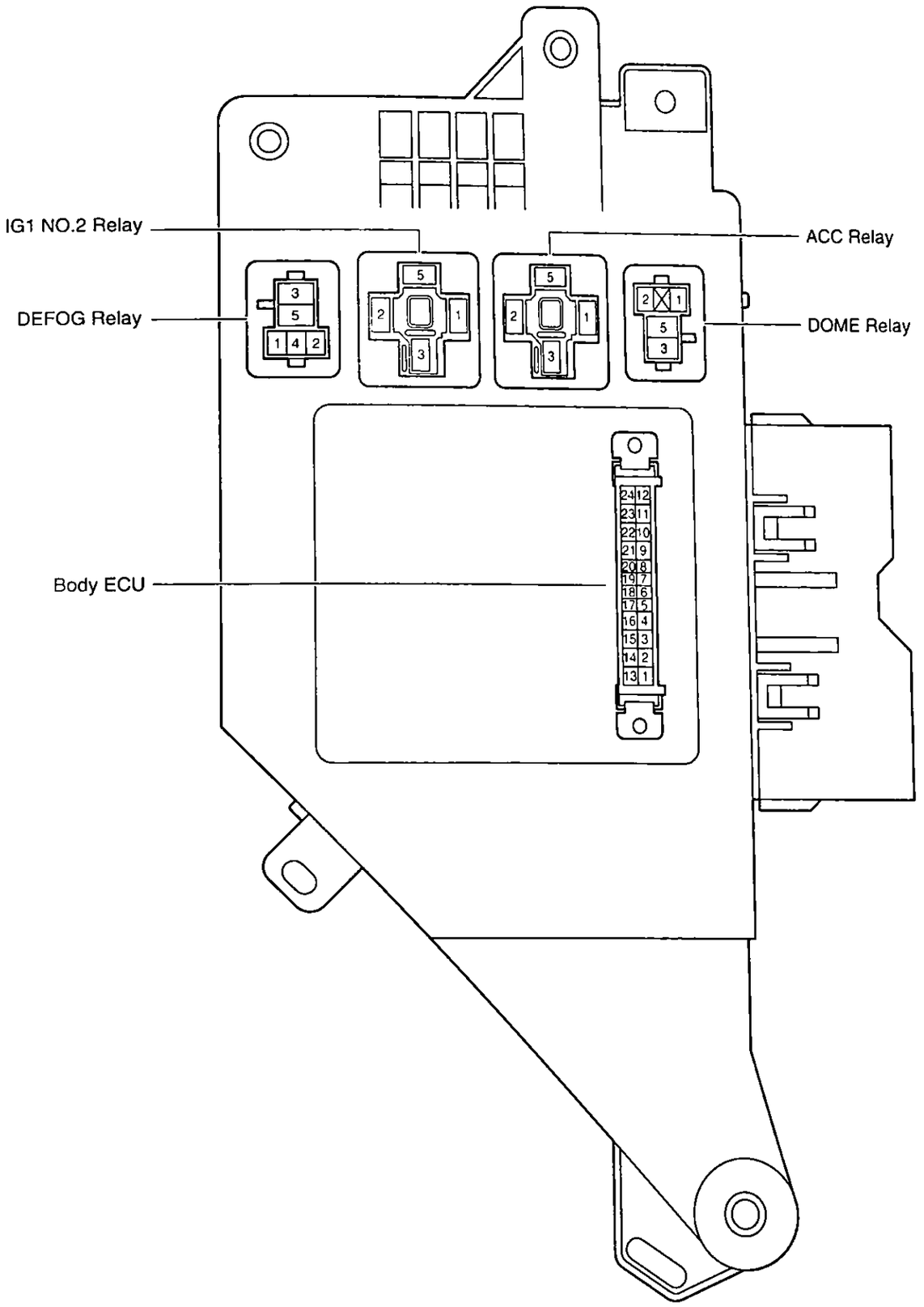
IG1 NO.2 Relay
ACC Relay
DEFOG Relay
DOME Relay
Body ECU

F RELAY LOCATIONS

⬭ : Cowl Side J/B LH	Left Kick Panel (See Page 20)

(Inner Circuit : See Page 34)

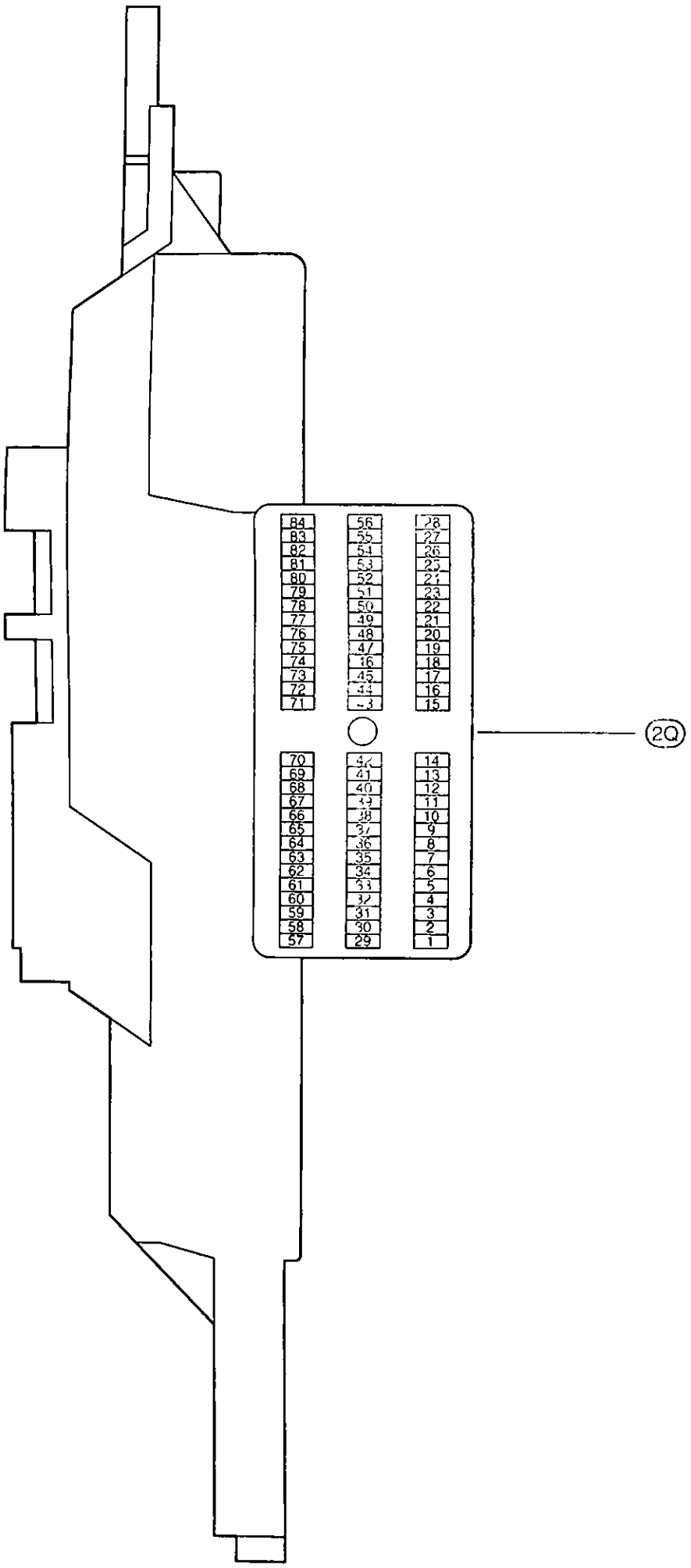

F RELAY LOCATIONS

⬭ : Cowl Side J/B LH	Left Kick Panel (See Page 20)

(Inner Circuit : See Page 34)

(2A)
Gray

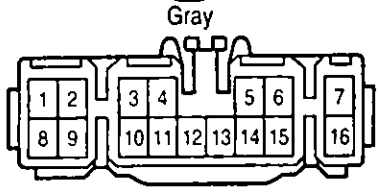

(from Engine Room No 2 Wire)

(2B)

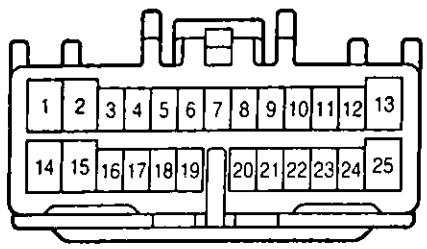

(from Engine Room No 2 Wire)

(2C)
Gray

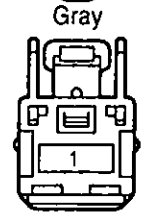

(from Engine Room No 2 Wire)

(2D)

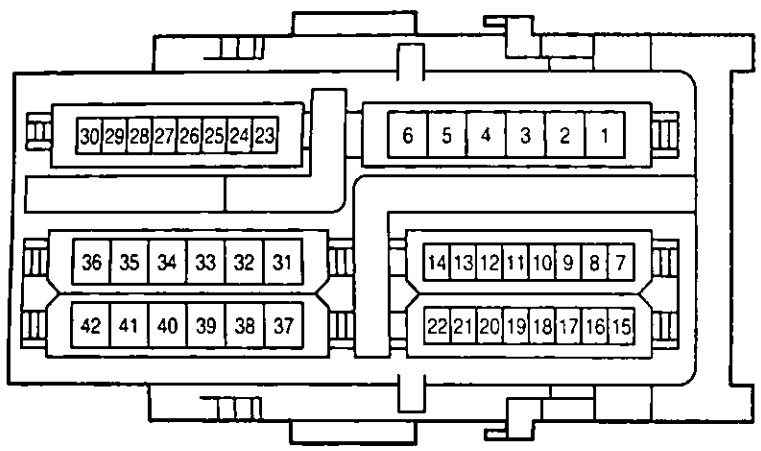

(from Dash Wire)

(2E)
Gray

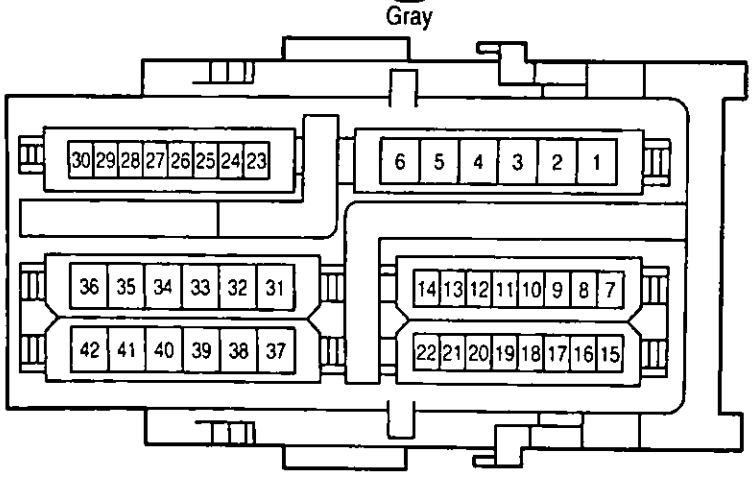

(from Dash Wire)

(2G)
Gray

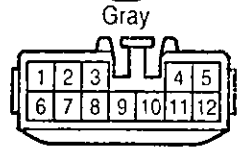

(from Dash Wire)

(2I)
Gray

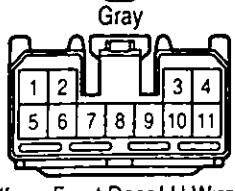

(from Front Door LH Wire)

(2J)
Gray

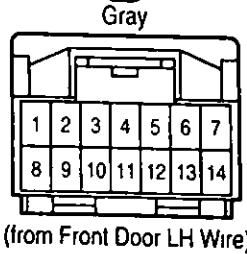

(from Front Door LH Wire)

(2K)
Black

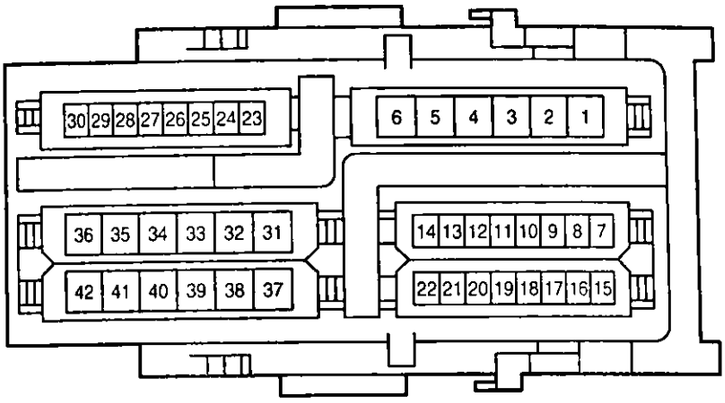

(from Floor No.1 Wire)

(2L)

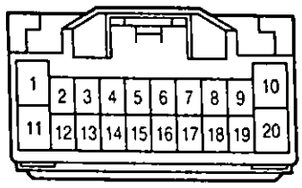

(from Roof No 1 Wire)

(20)

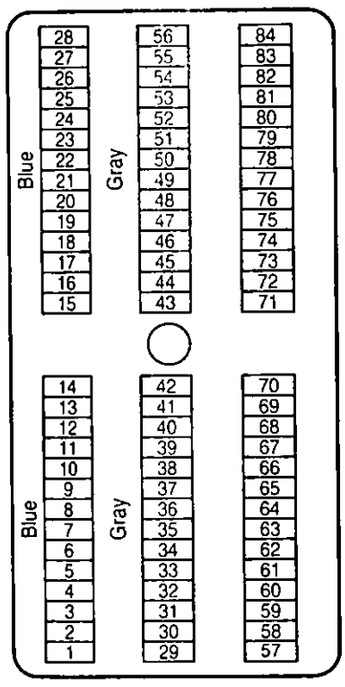

(from Instrument panel Integration Wire)

[Cowl Side J/B LH Inner Circuit]

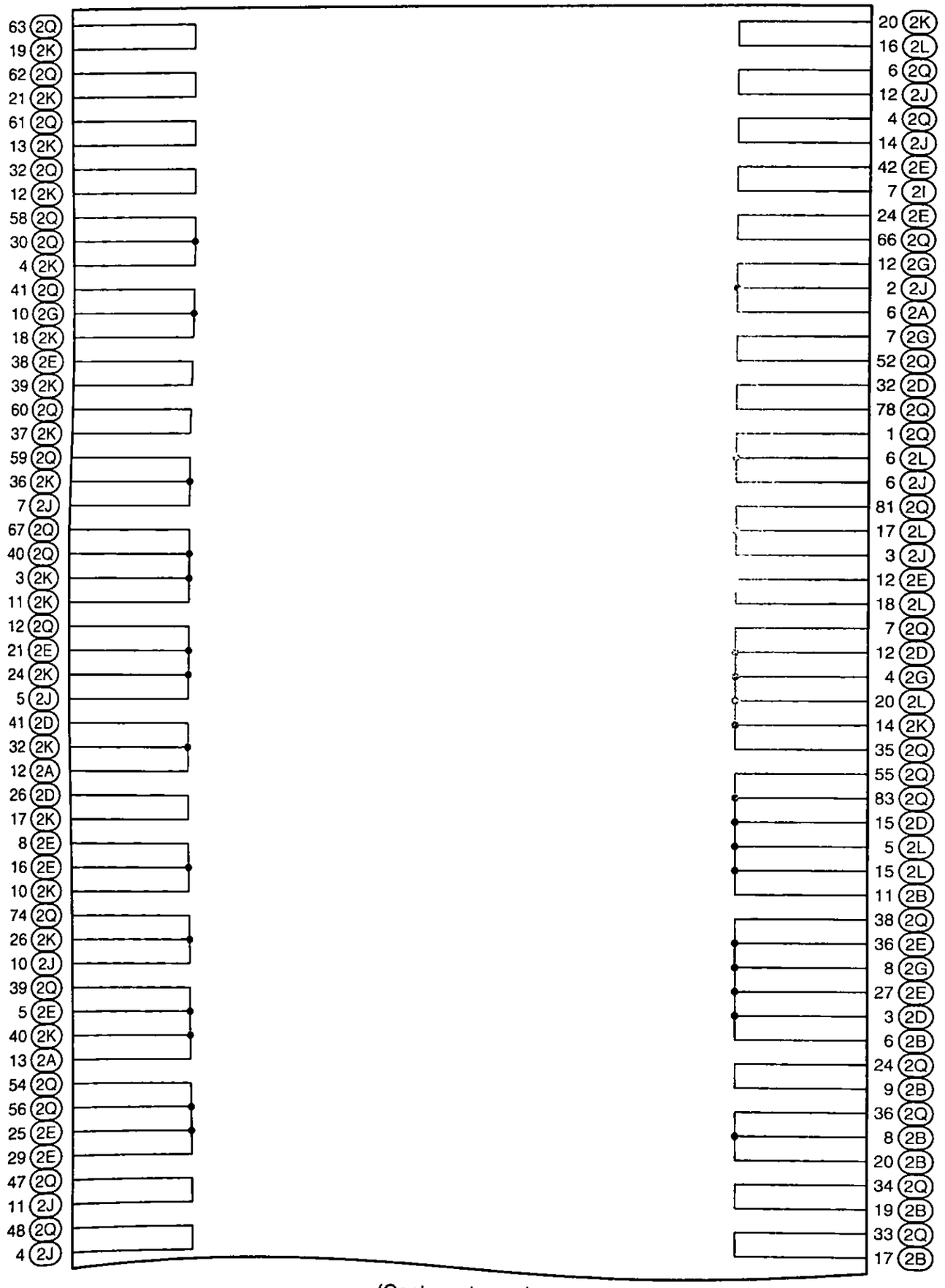

(Cont. next page)

(Cont'd)

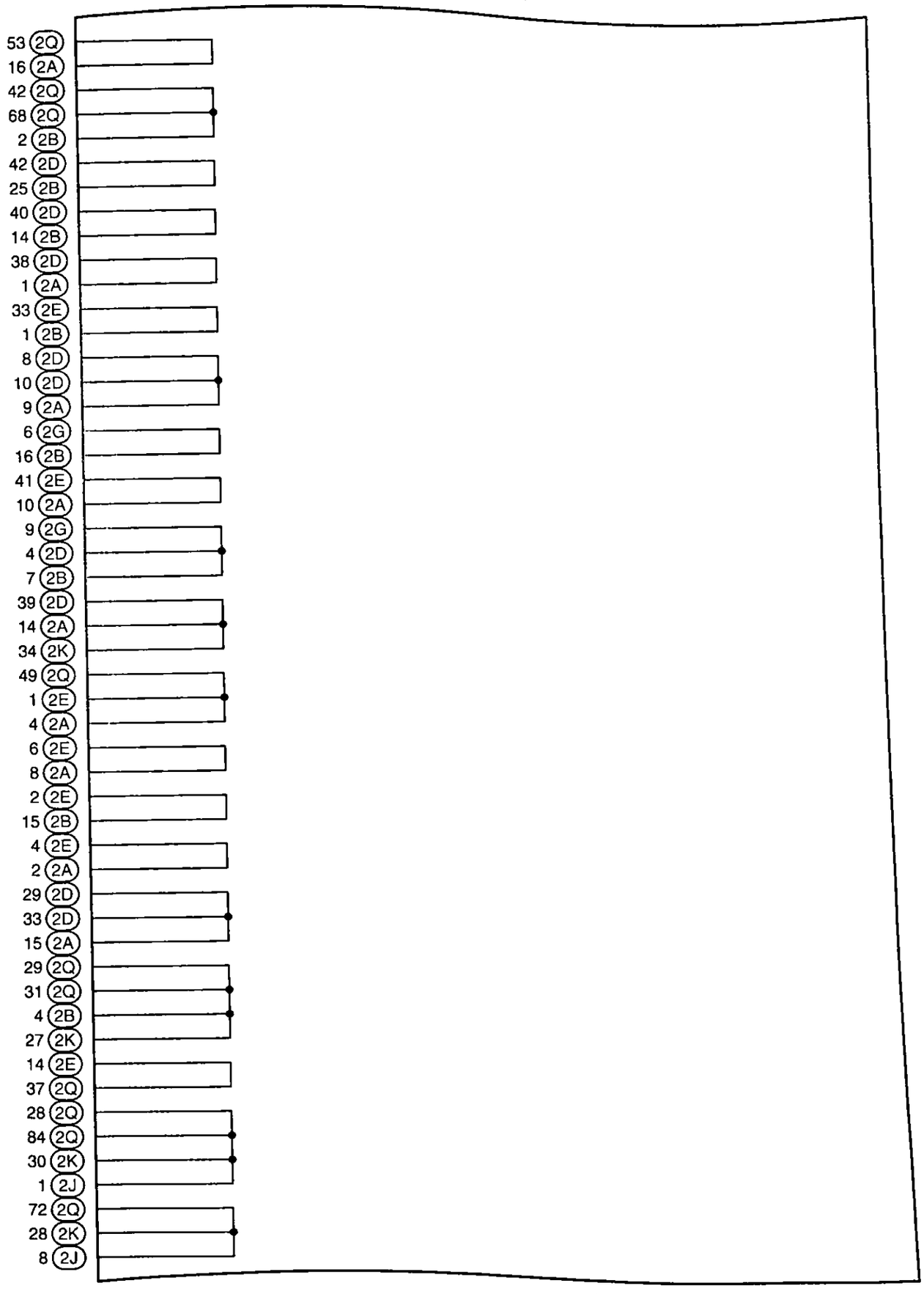

(Cont. next page)

F RELAY LOCATIONS

[Cowl Side J/B LH Inner Circuit]

(Cont'd)

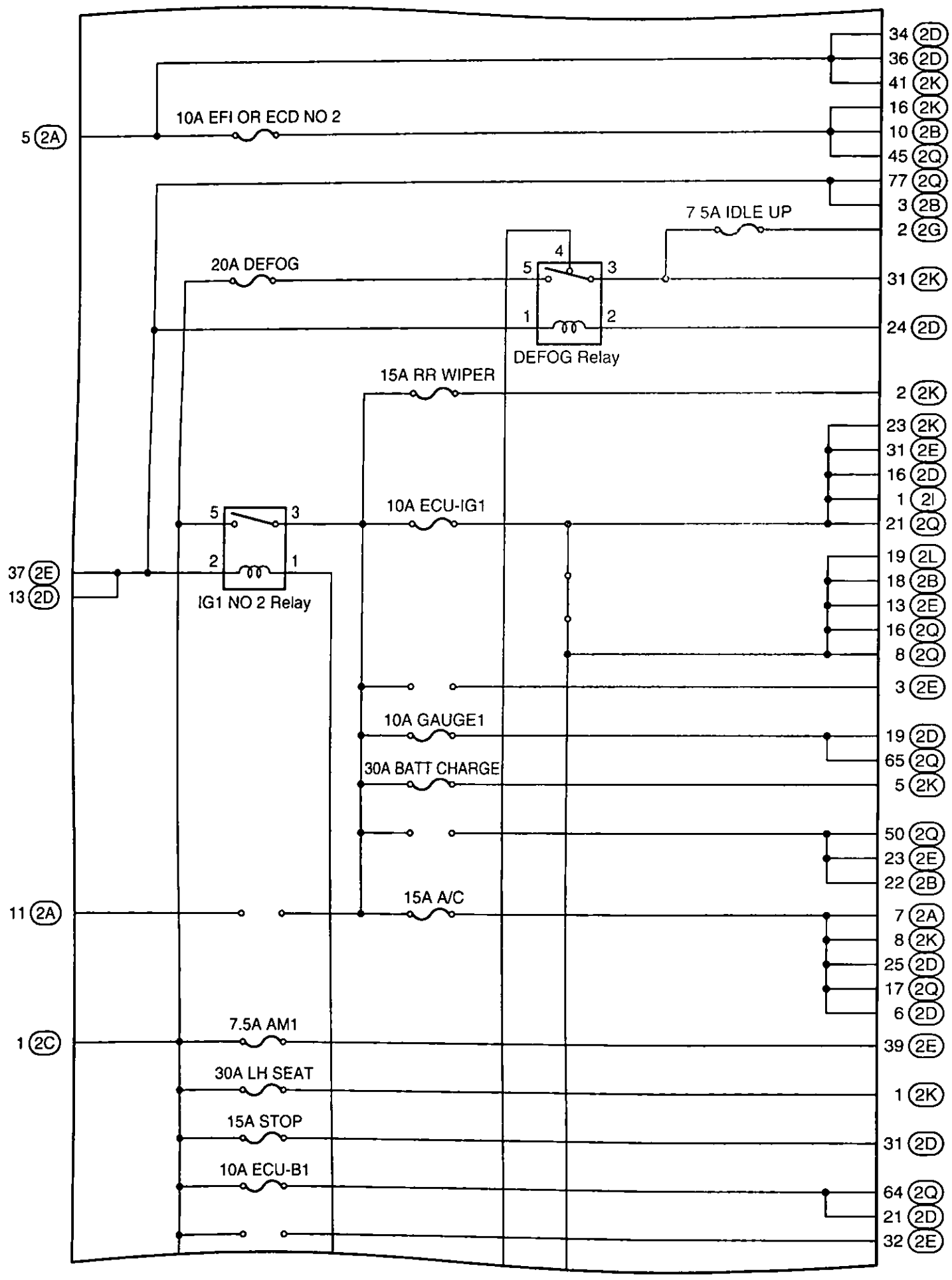

(Cont. next page)

(Cont'd)

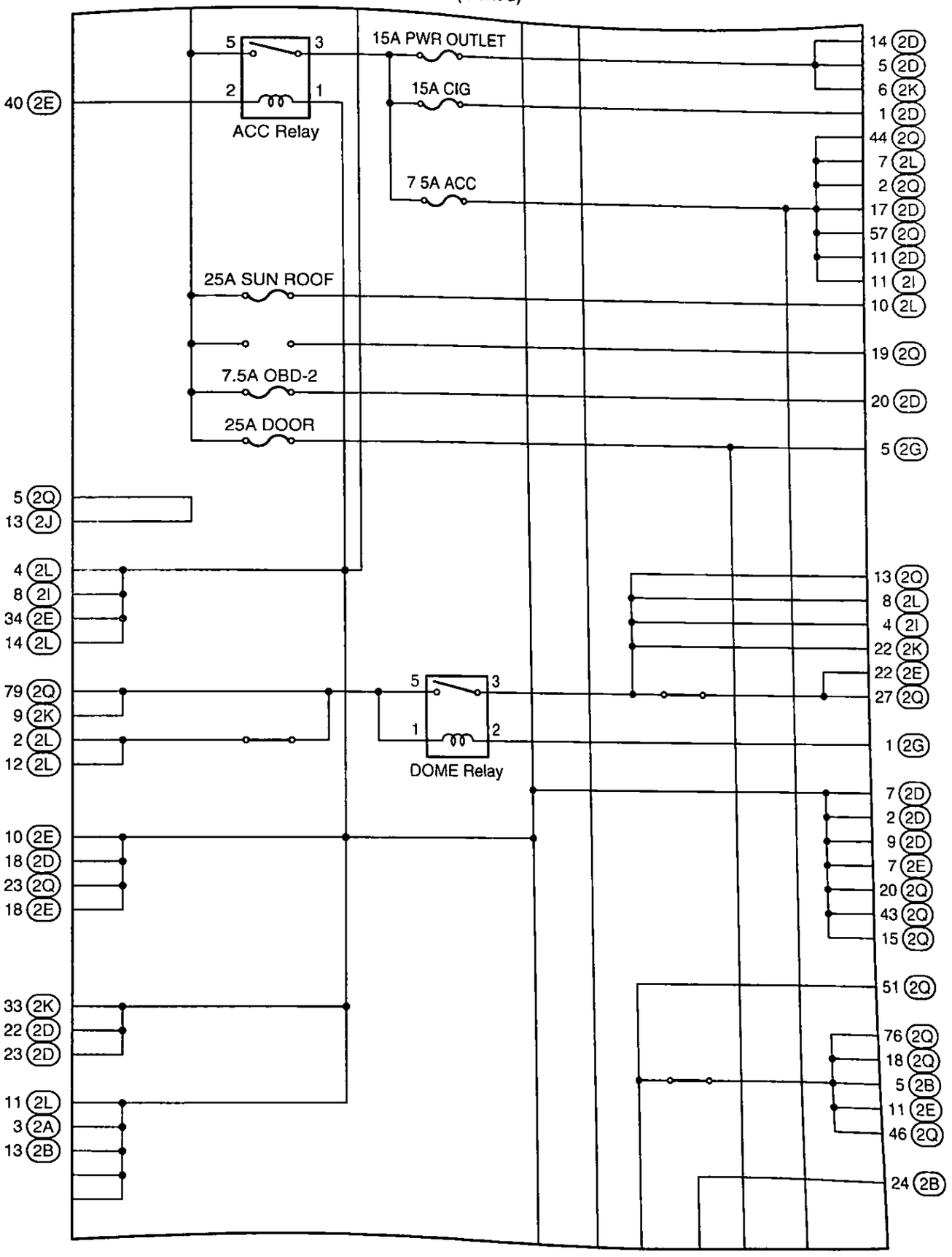

(Cont. next page)

[Cowl Side J/B LH Inner Circuit]

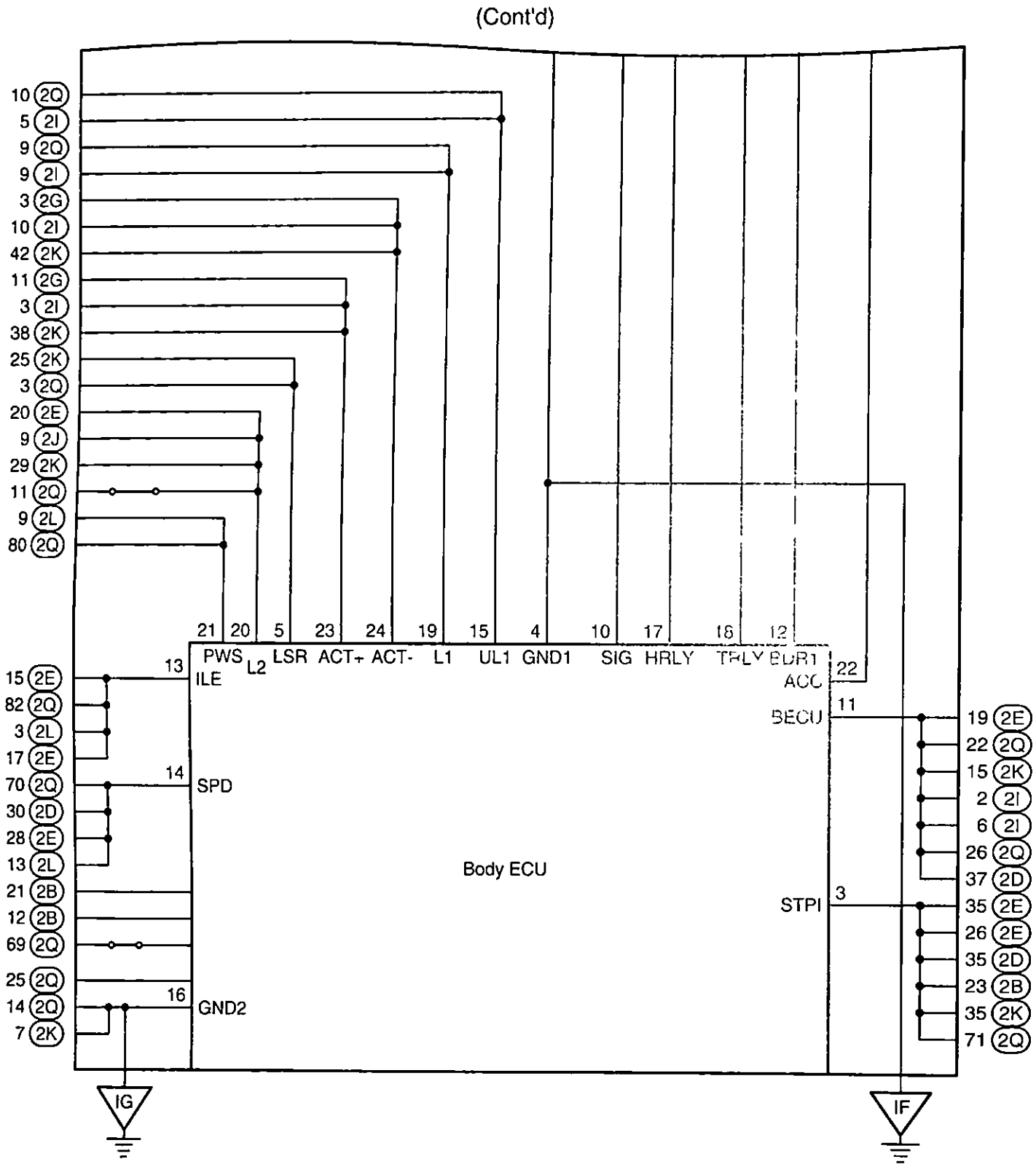

F RELAY LOCATIONS

⬭ : Cowl Side J/B RH	Right Kick Panel (See Page 20)

(Inner Circuit : See Page 46)

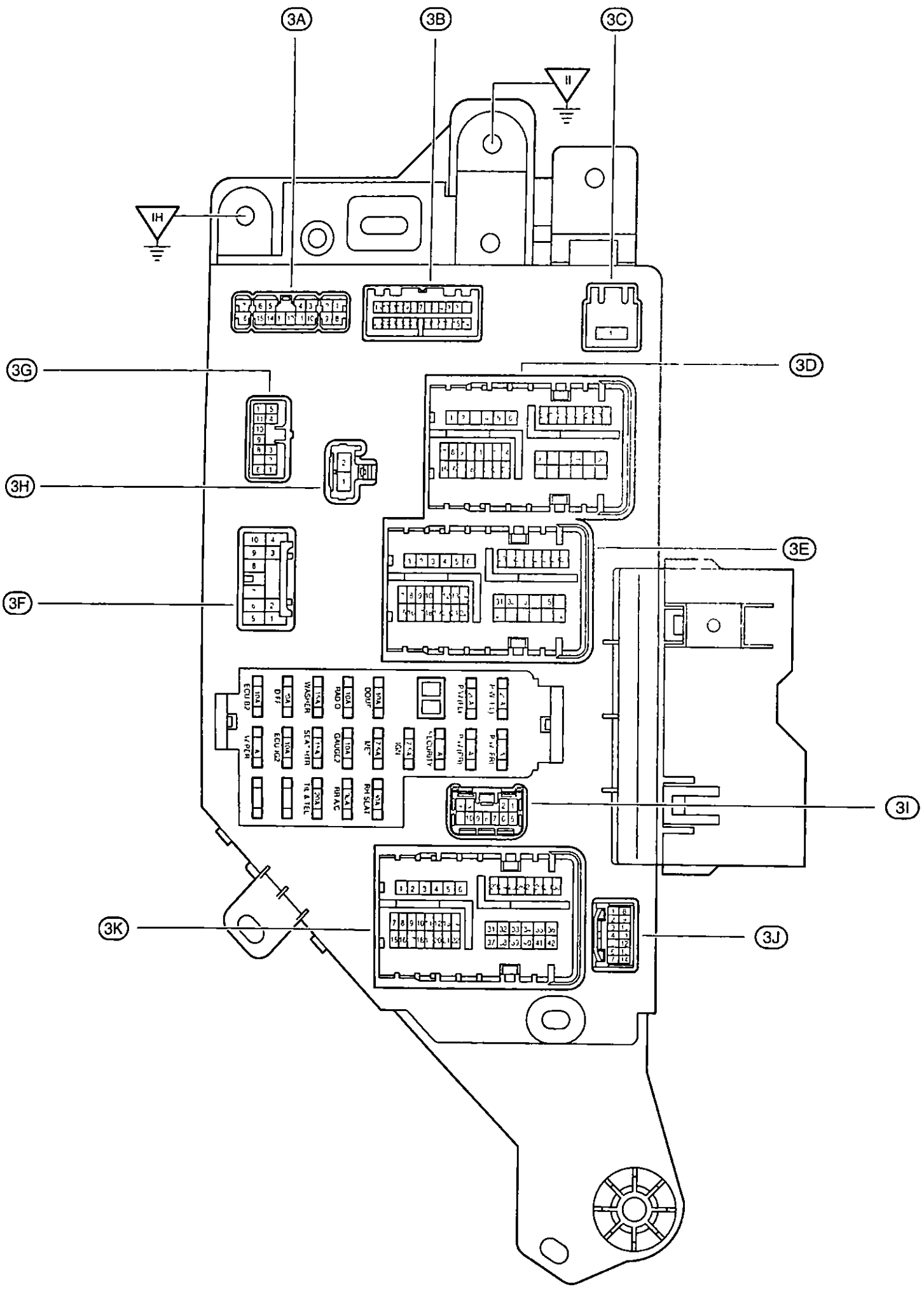

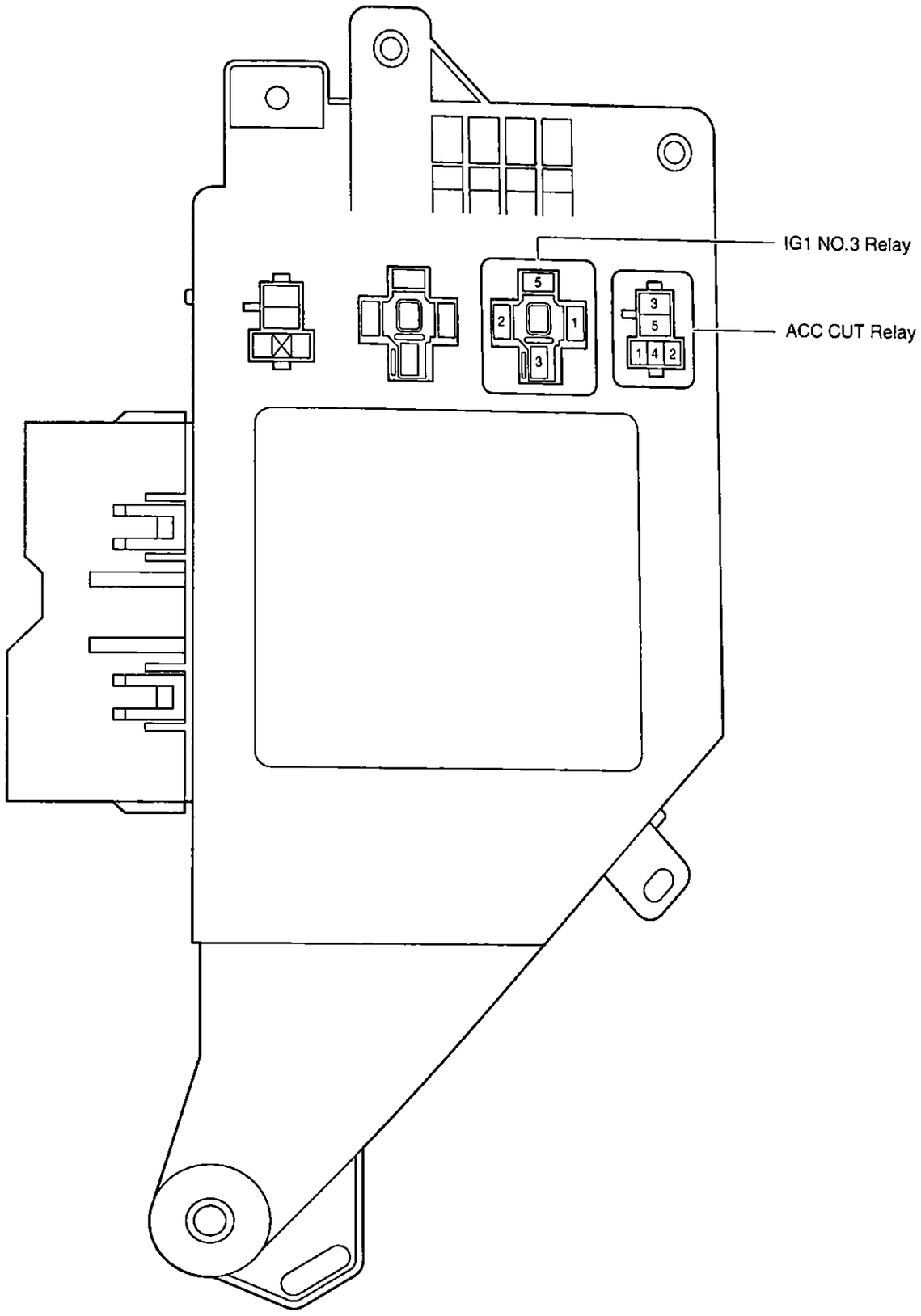
IG1 NO.3 Relay
ACC CUT Relay
5
2
1
3
3
5
1
4
2

F RELAY LOCATIONS

⬭ : Cowl Side J/B RH	Right Kick Panel (See Page 20)

(Inner Circuit : See Page 46)

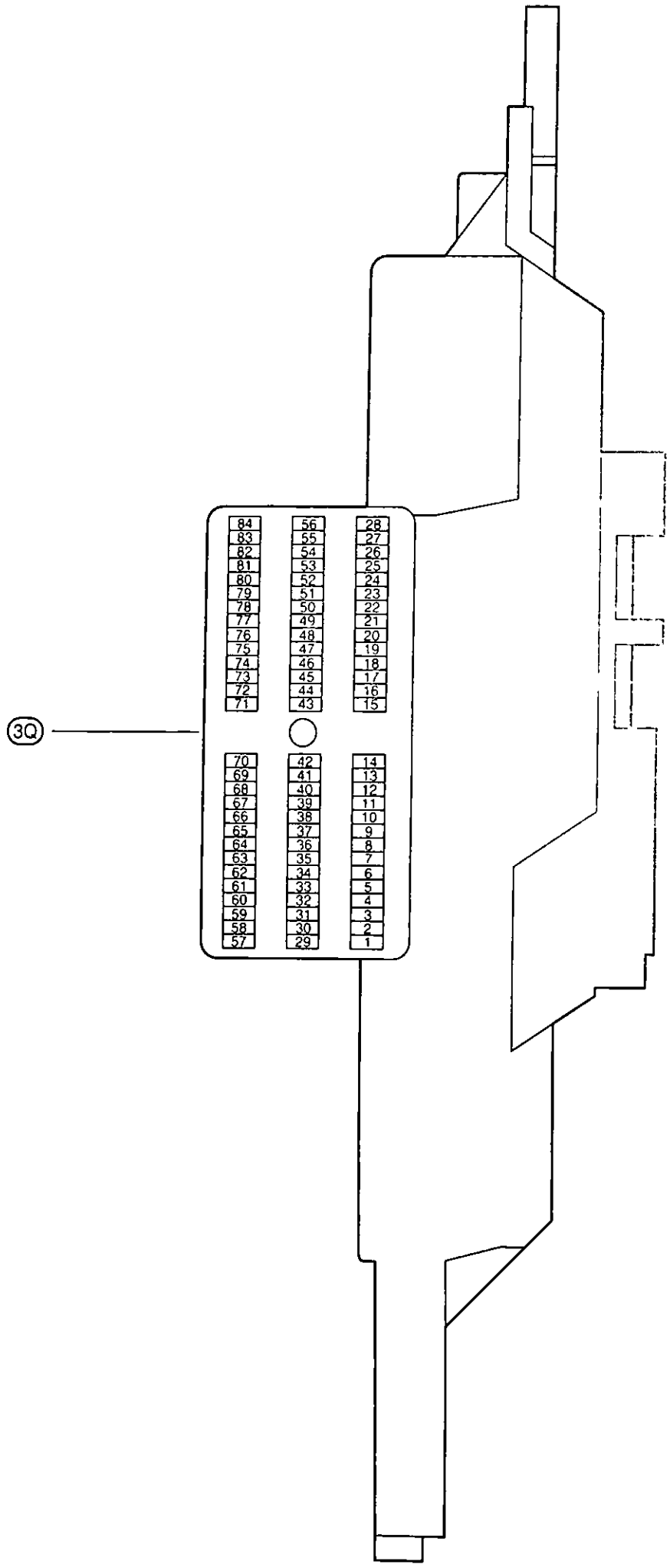

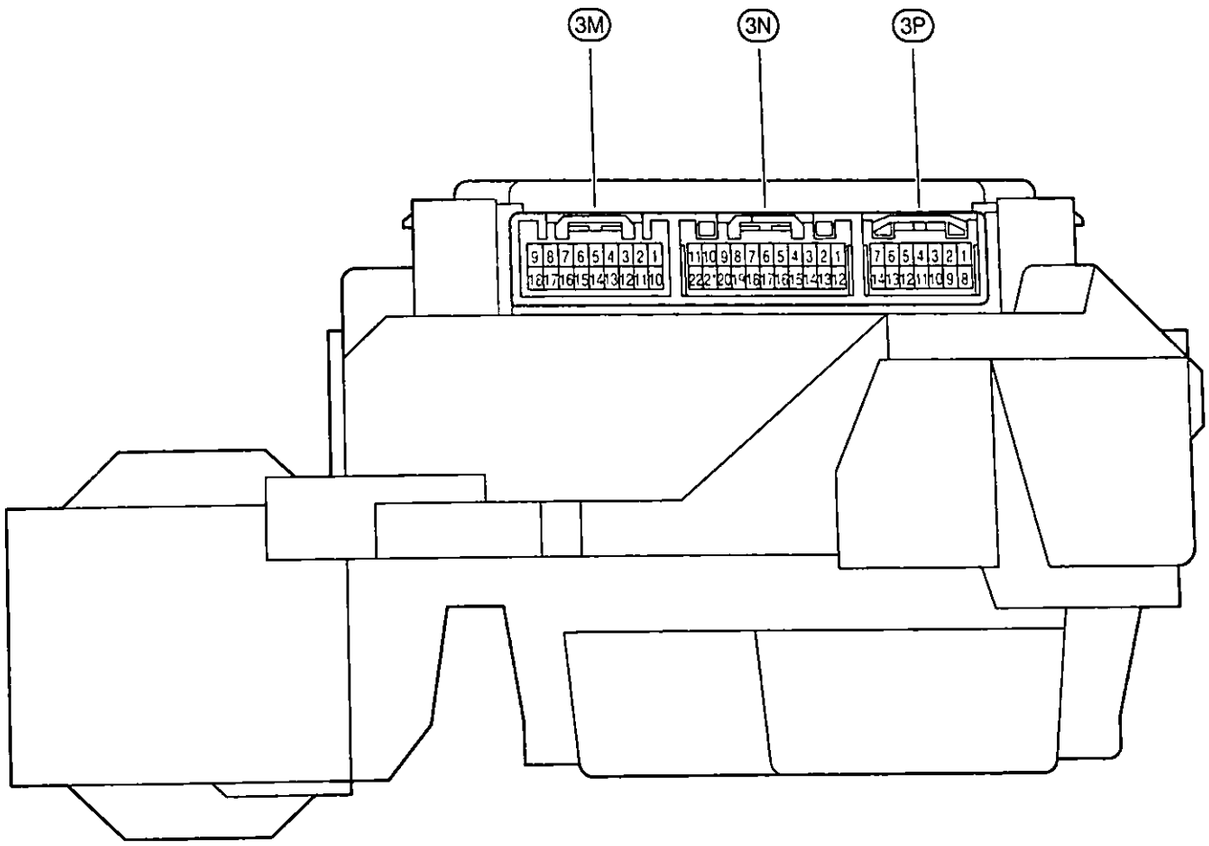
3M
3N
3P

F RELAY LOCATIONS

⬭ : Cowl Side J/B RH	Right Kick Panel (See Page 20)

(Inner Circuit : See Page 46)

3A
Gray

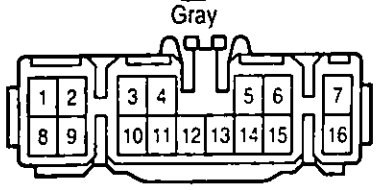

(from Engine Room No 2 Wire)

3B

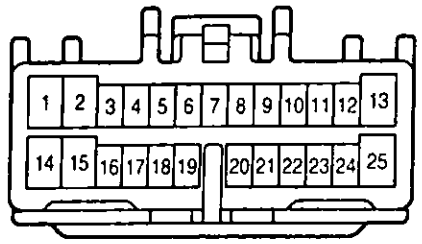

(from Engine Room No 2 Wire)

3C
Gray

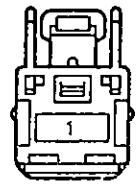

(from Engine Room No 2 Wire)

3D

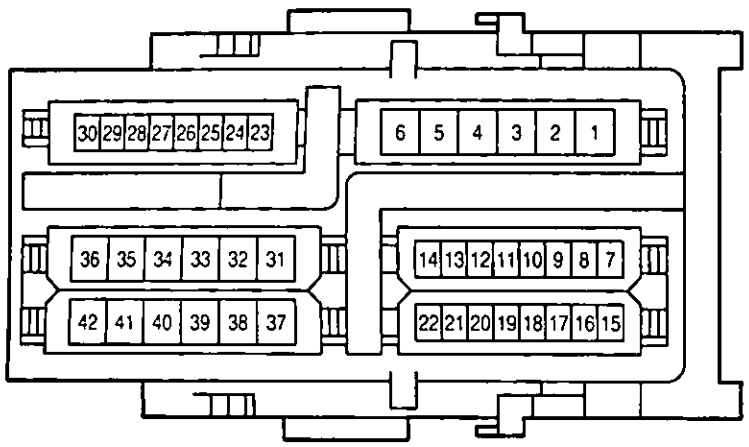

(from Dash Wire)

3E
Gray

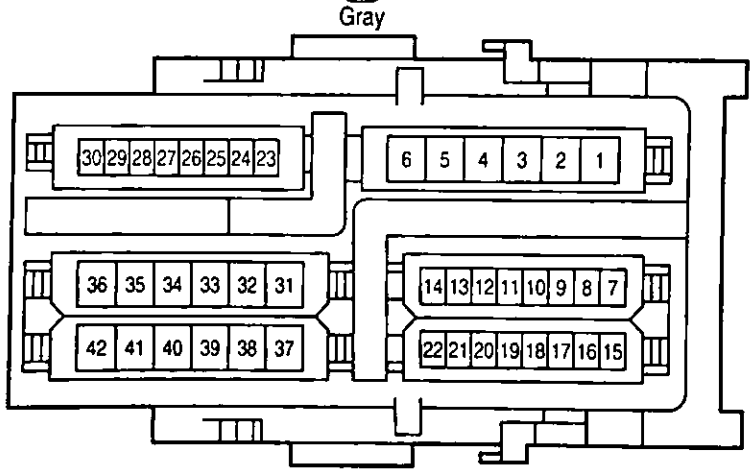

(from Dash Wire)

3F
Yellow

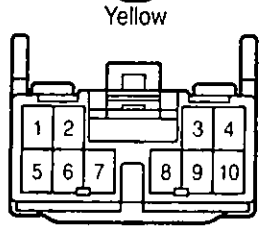

(from Dash Wire)

3G
Gray

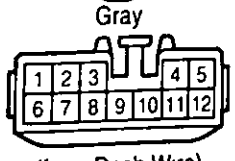

(from Dash Wire)

3H
Gray

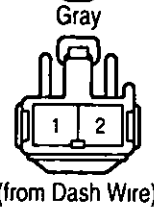

(from Dash Wire)

3I
Gray

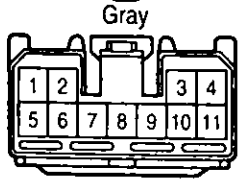

(from Front Door RH Wire)

3J
Gray

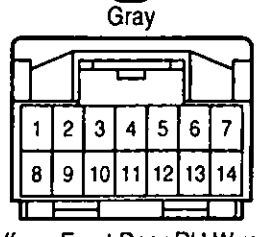

(from Front Door RH Wire)

(3K)
Black

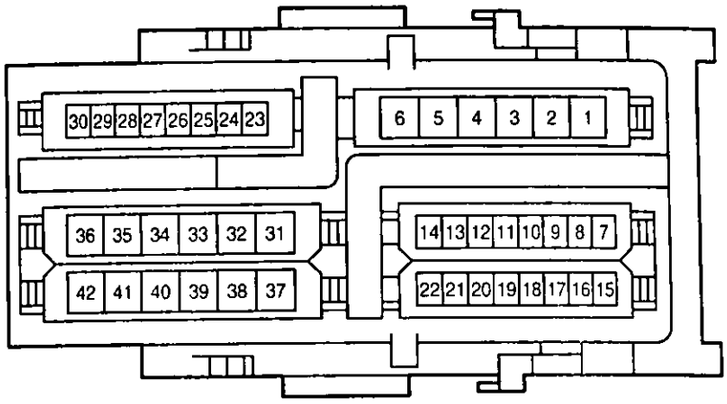

(from Floor No.2 Wire)

(3M)

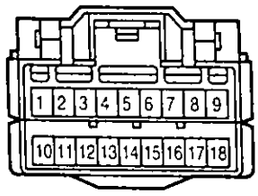

(from Dash Wire)

(3N)

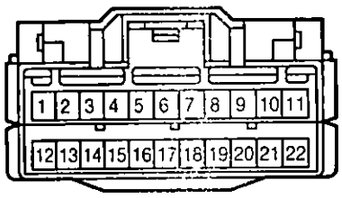

(from Dash Wire)

(3P)

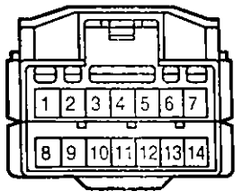

(from Dash Wire)

(3Q)

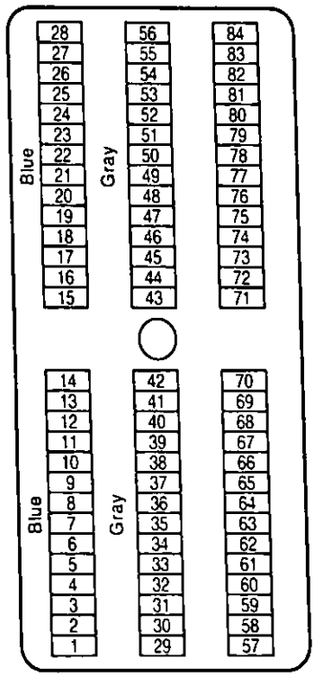

(from Instrument Panel Integration Wire)

[Cowl Side J/B RH Inner Circuit]

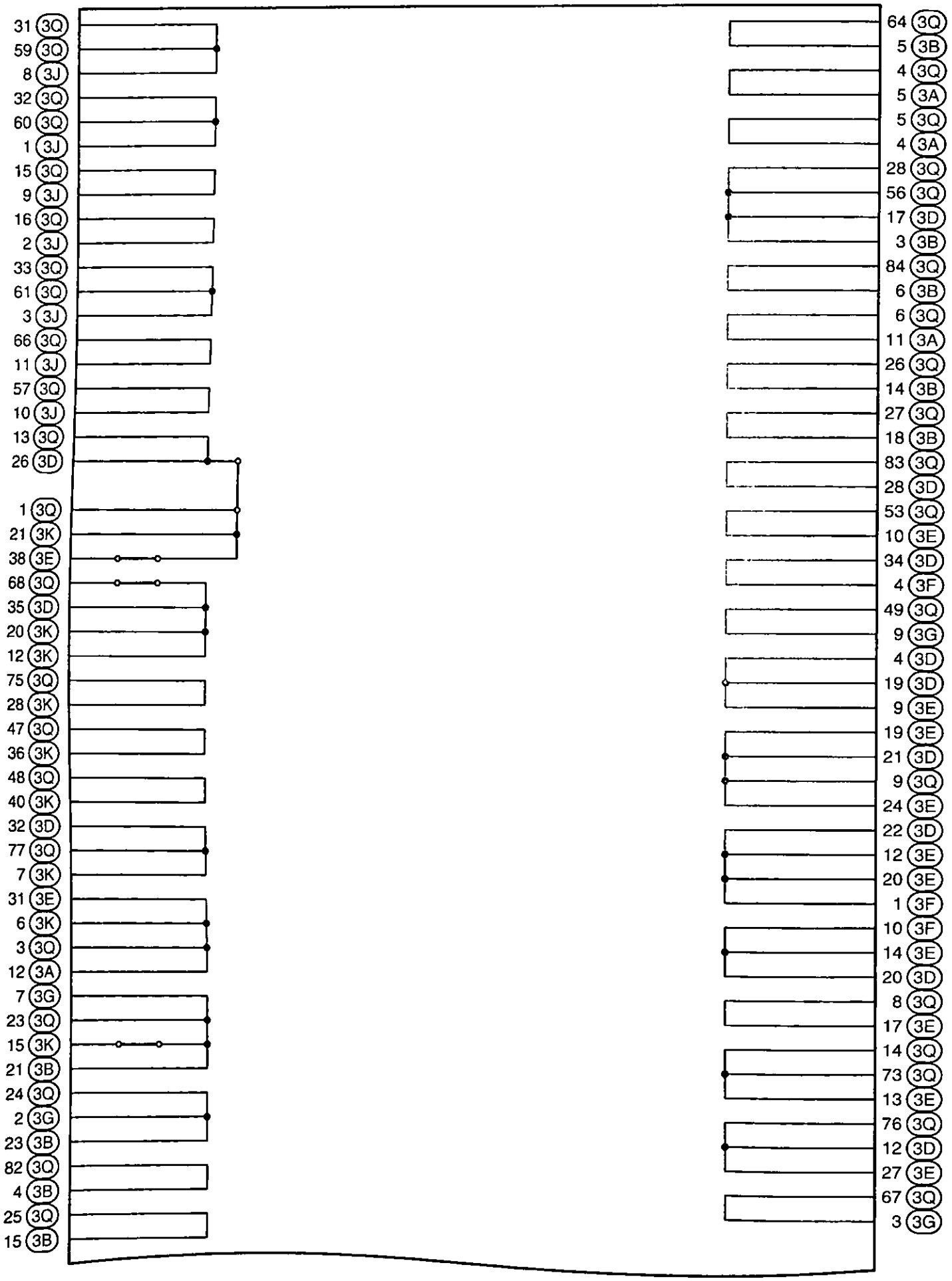

(Cont. next page)

(Cont'd)

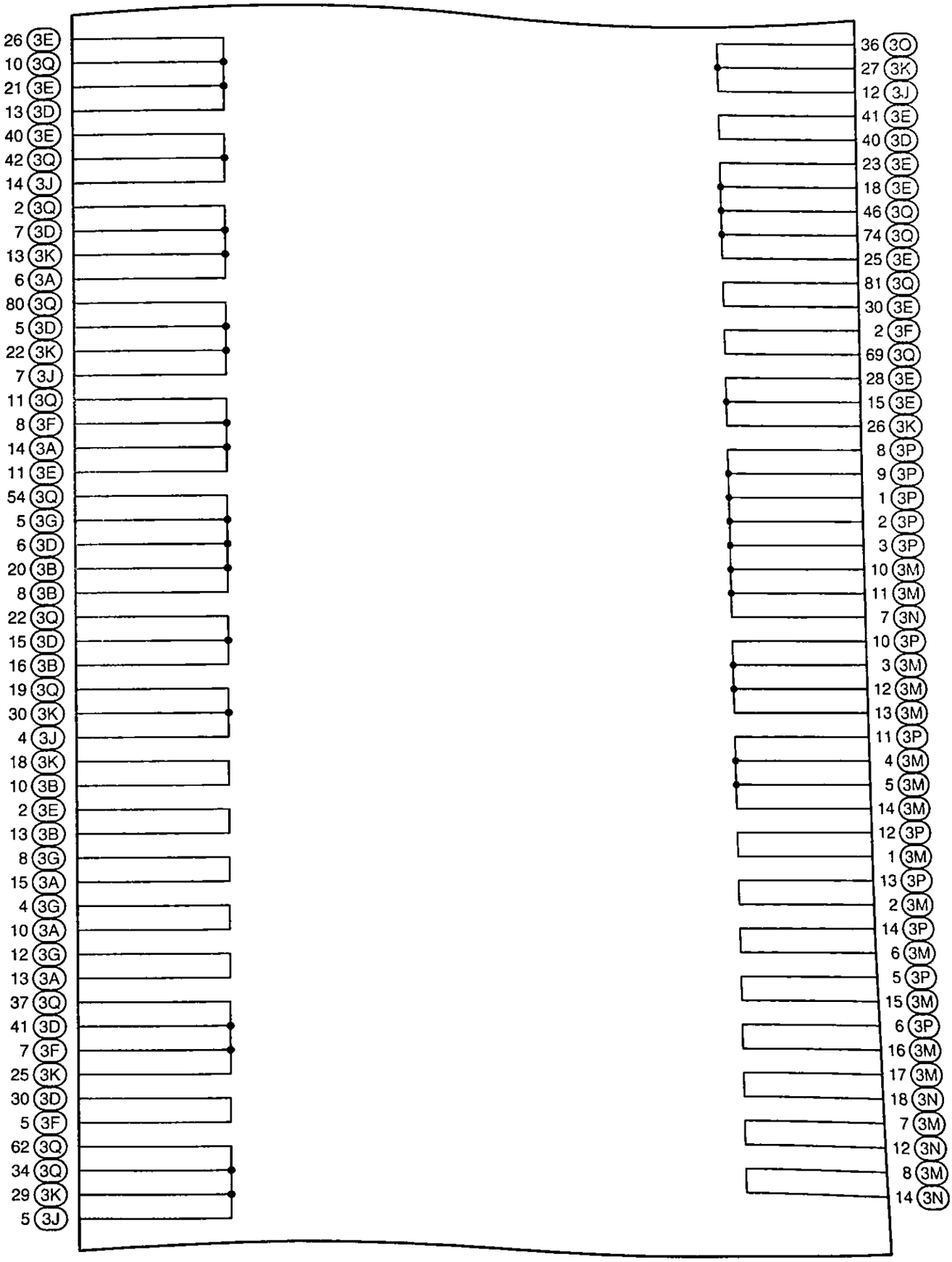

(Cont. next page)

[Cowl Side J/B RH Inner Circuit]

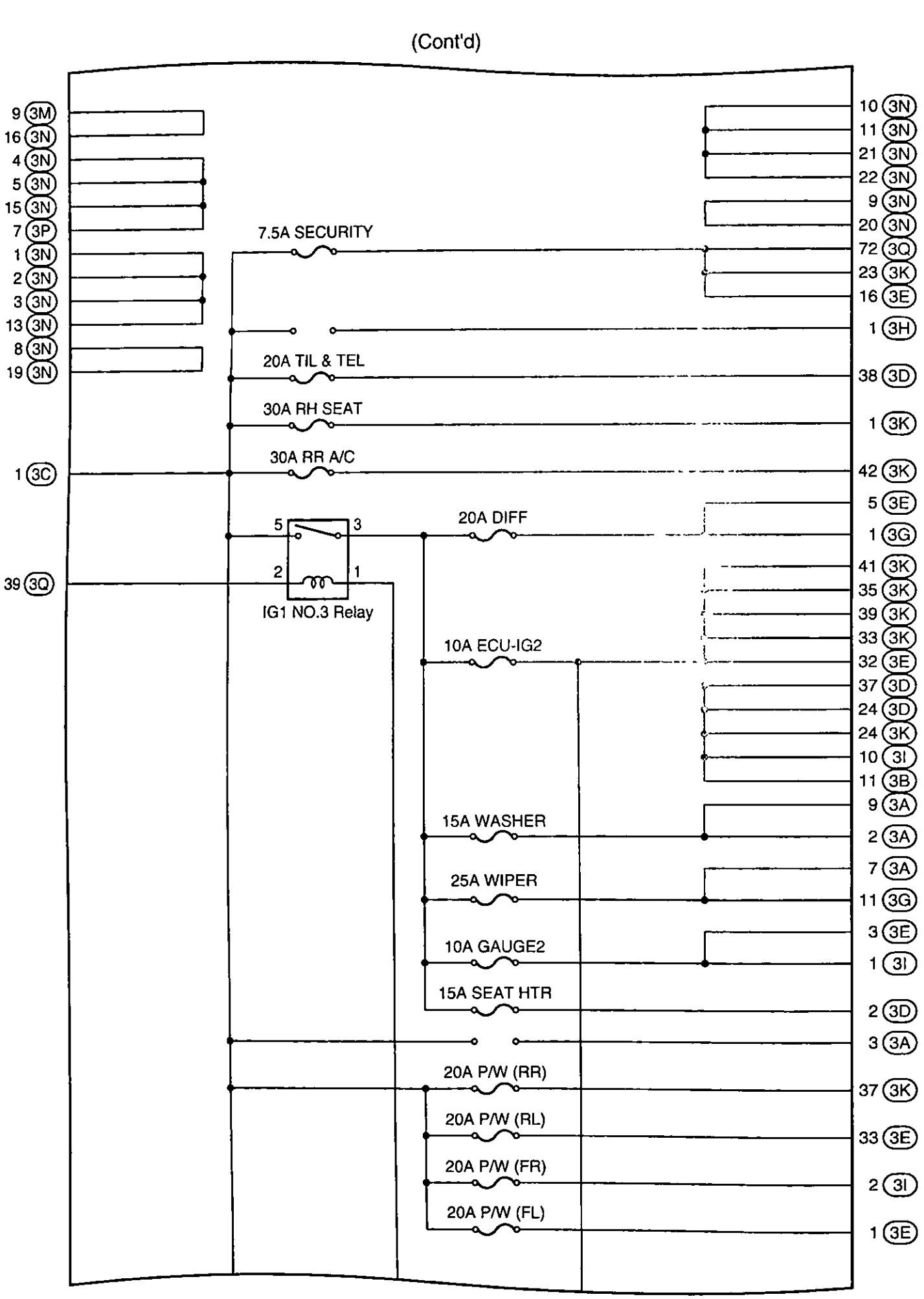

(Cont. next page)

(Cont'd)

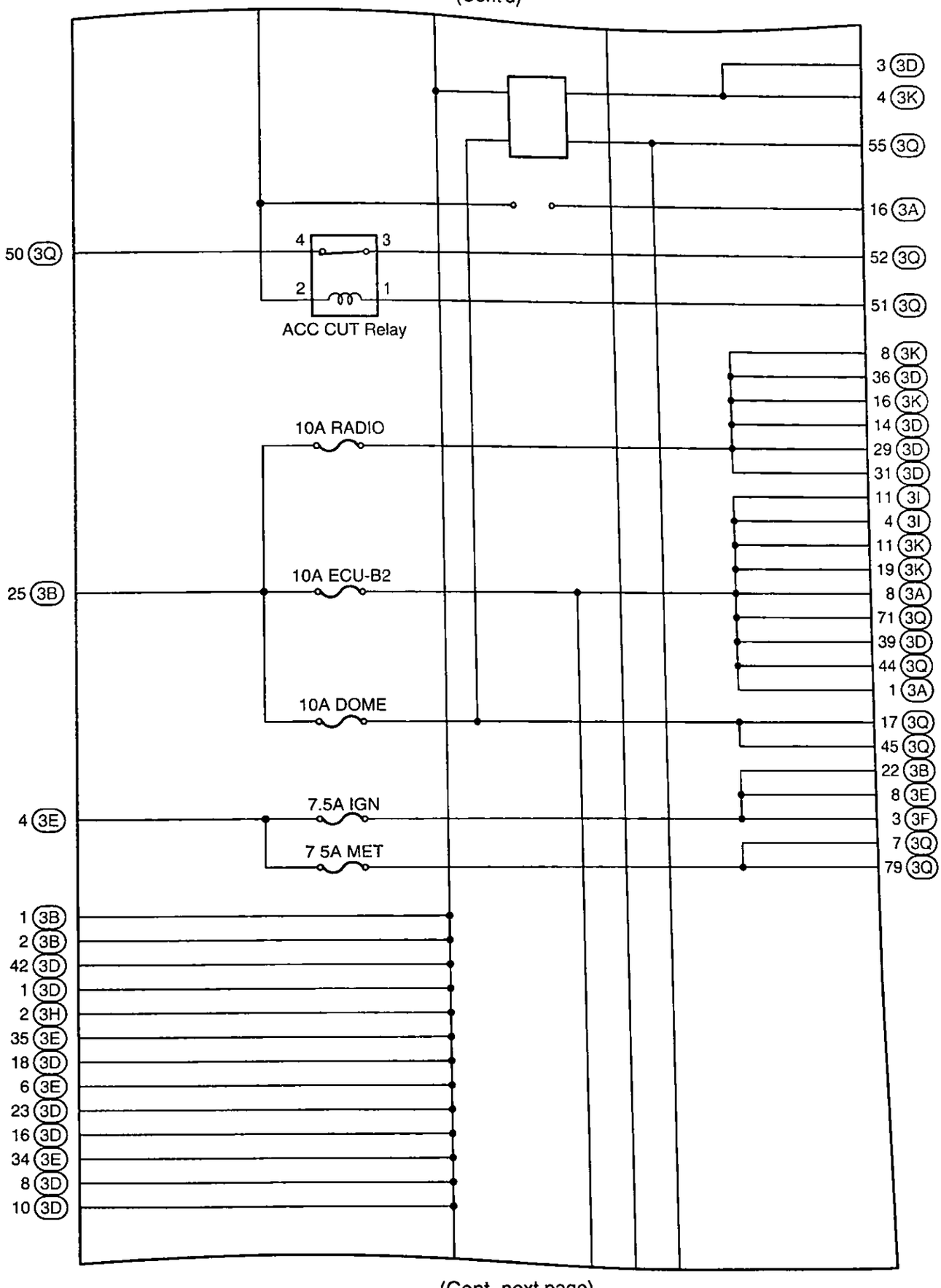

(Cont. next page)

[Cowl Side J/B RH Inner Circuit]

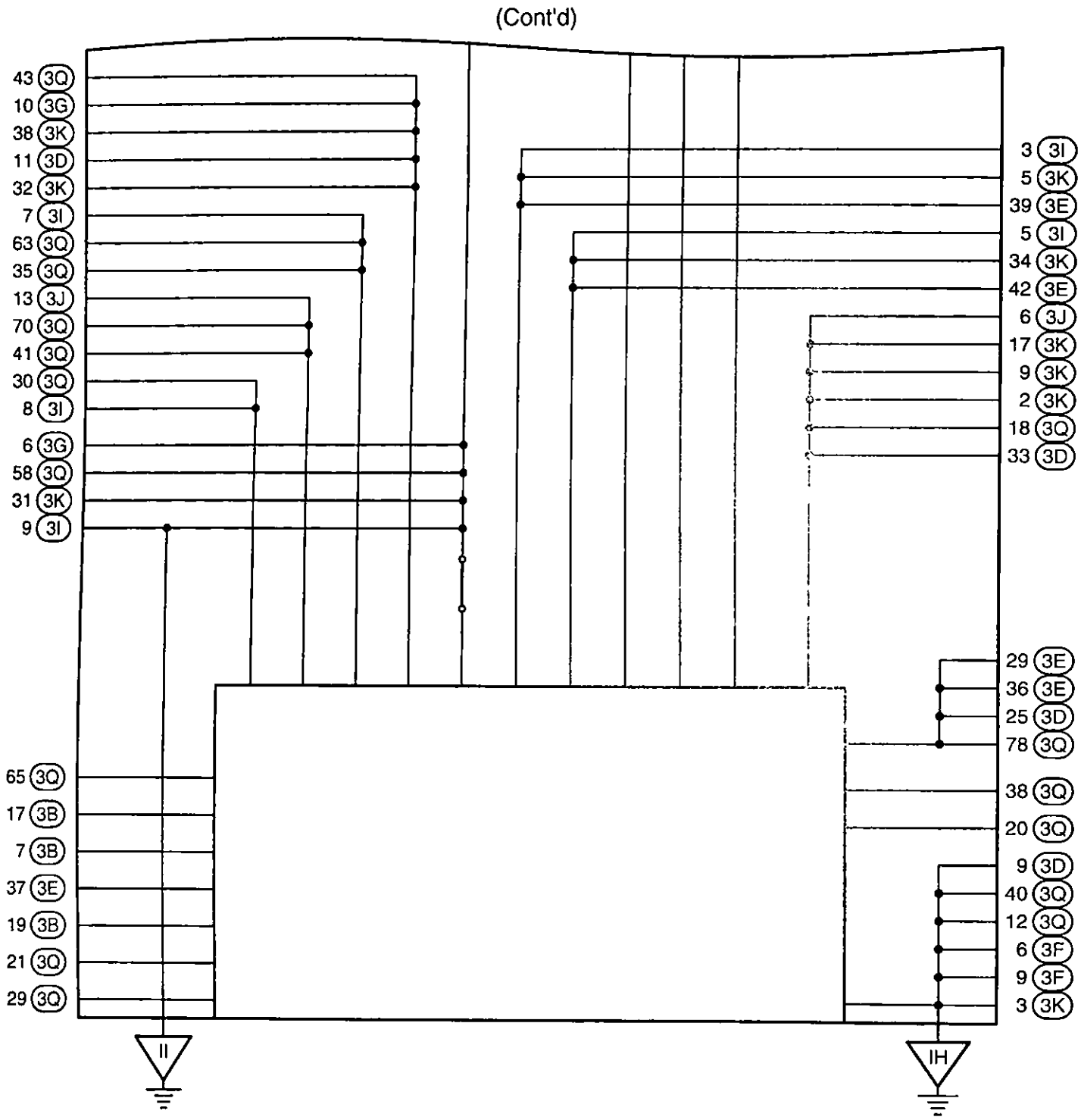

F RELAY LOCATIONS

○ : J/B No.4	Instrument Panel Center (See Page 20)

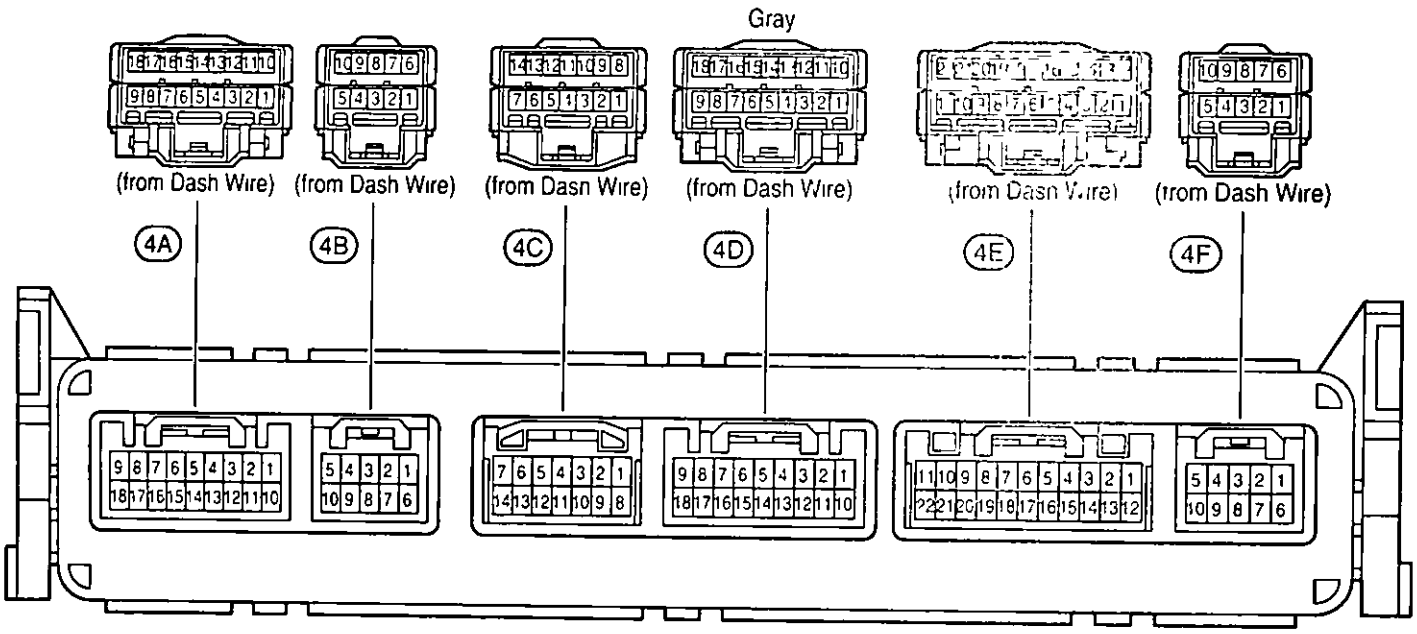

F RELAY LOCATIONS

[J/B No.4 Inner Circuit]

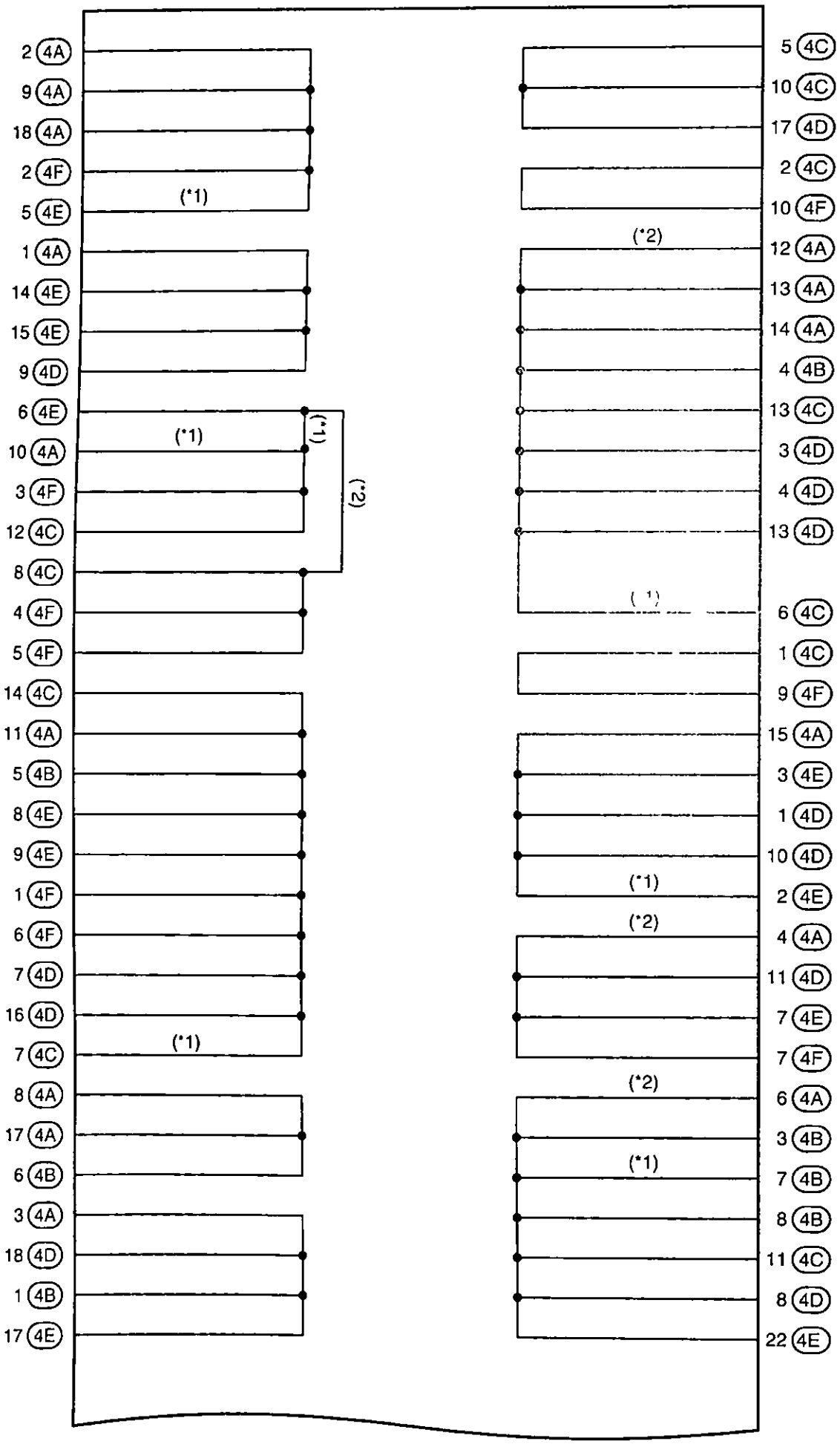

(Cont. next page)

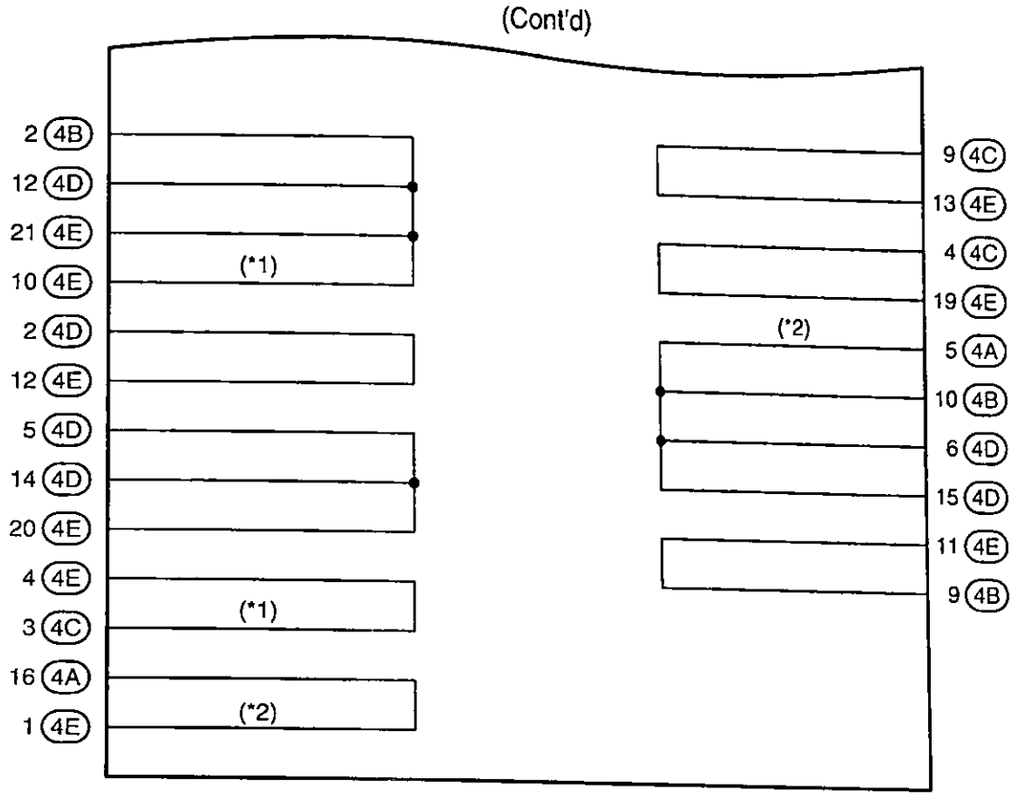

* 1 w/ Navigation System
* 2.w/o Navigation System

F RELAY LOCATIONS

○ : J/B No.5	Behind the Combination Meter (See Page 20)

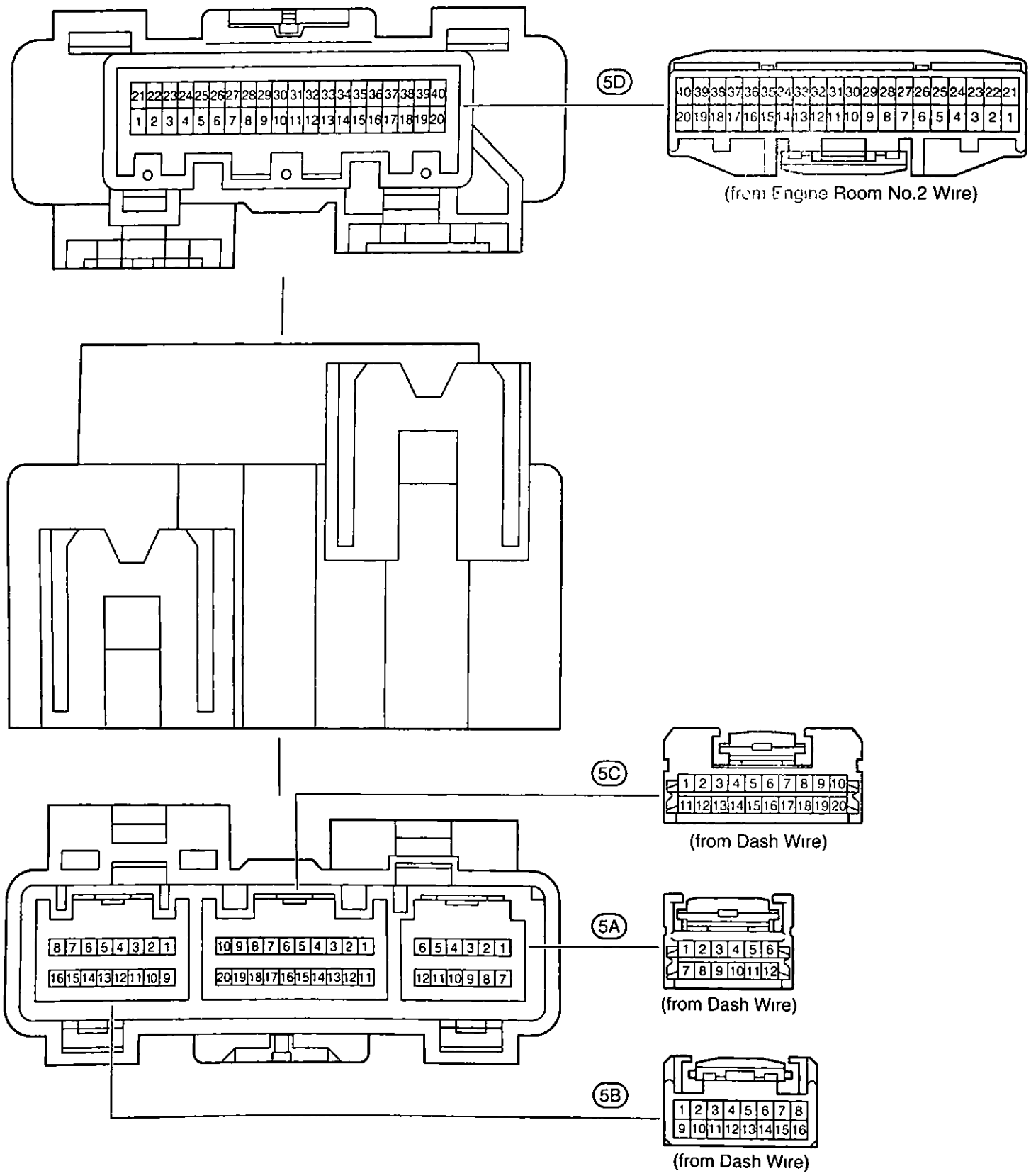

F RELAY LOCATIONS

[J/B No.5 Inner Circuit]

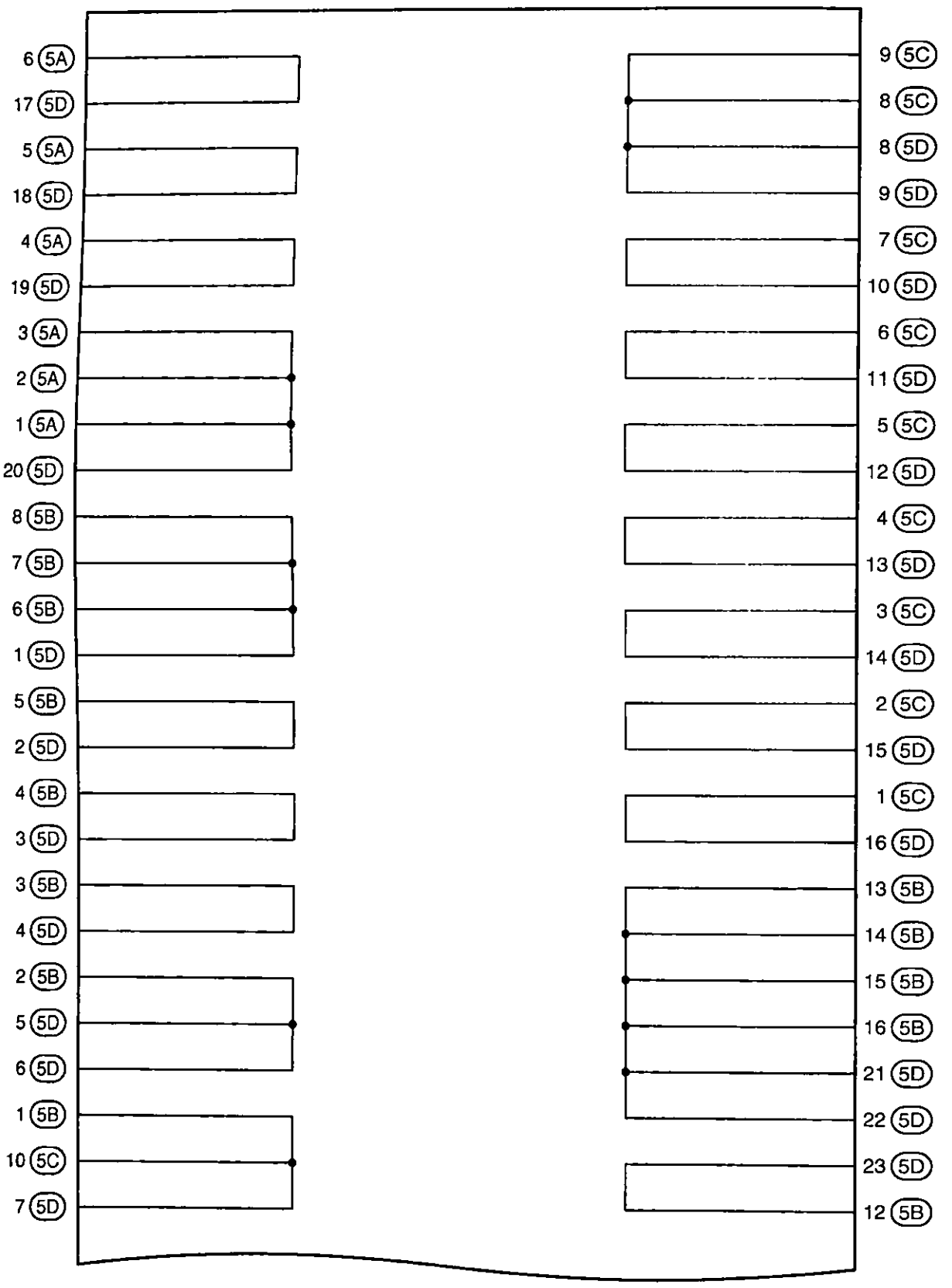

(Cont. next page)

(Cont'd)

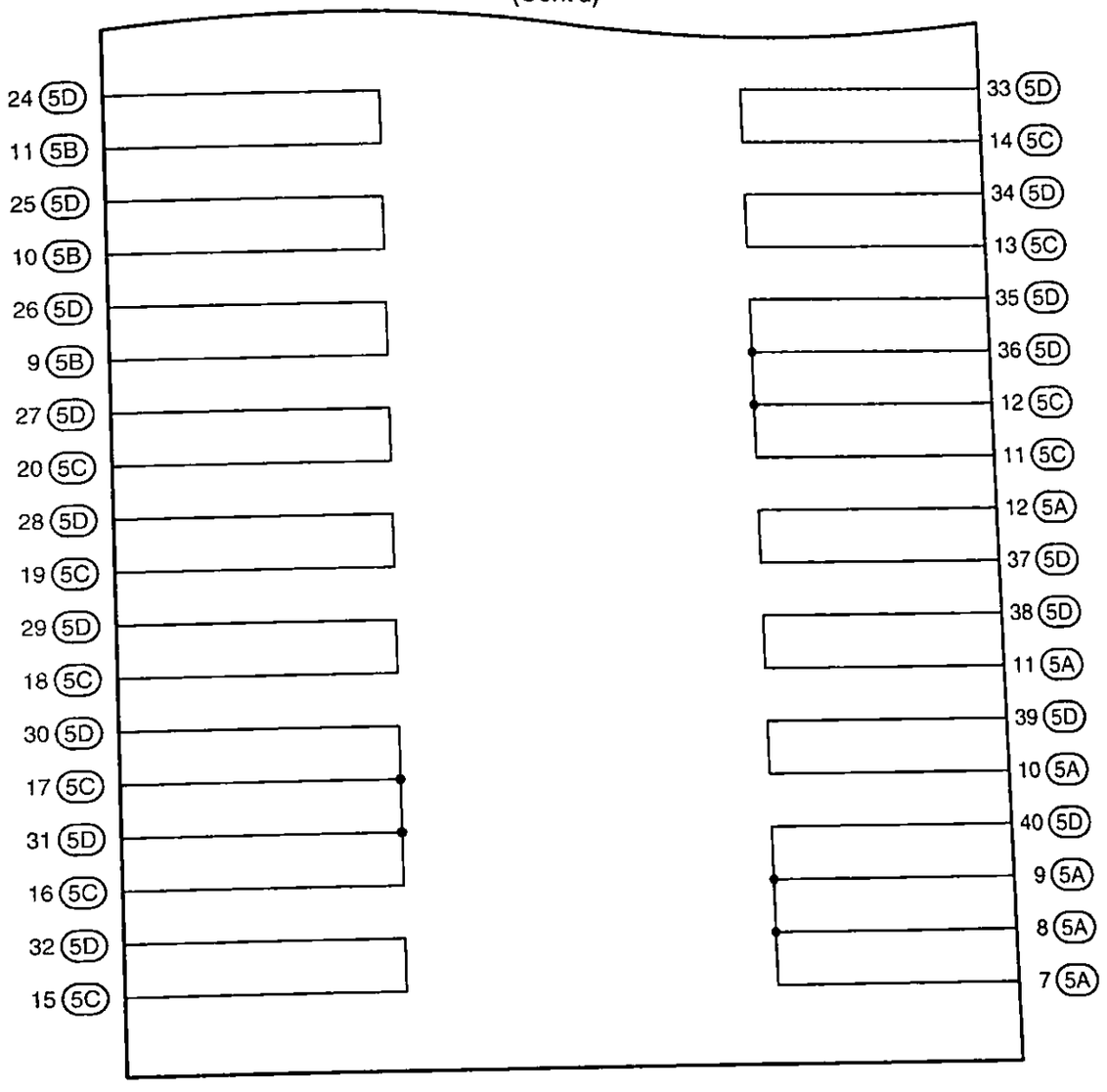
24 5D
11 5B
25 5D
10 5B
26 5D
9 5B
27 5D
20 5C
28 5D
19 5C
29 5D
18 5C
30 5D
17 5C
31 5D
16 5C
32 5D
15 5C
33 5D
14 5C
34 5D
13 5C
35 5D
36 5D
12 5C
11 5C
12 5A
37 5D
38 5D
11 5A
39 5D
10 5A
40 5D
9 5A
8 5A
7 5A

F RELAY LOCATIONS

⬭ : J/B No.6	Behind the Glove Box (See Page 20)

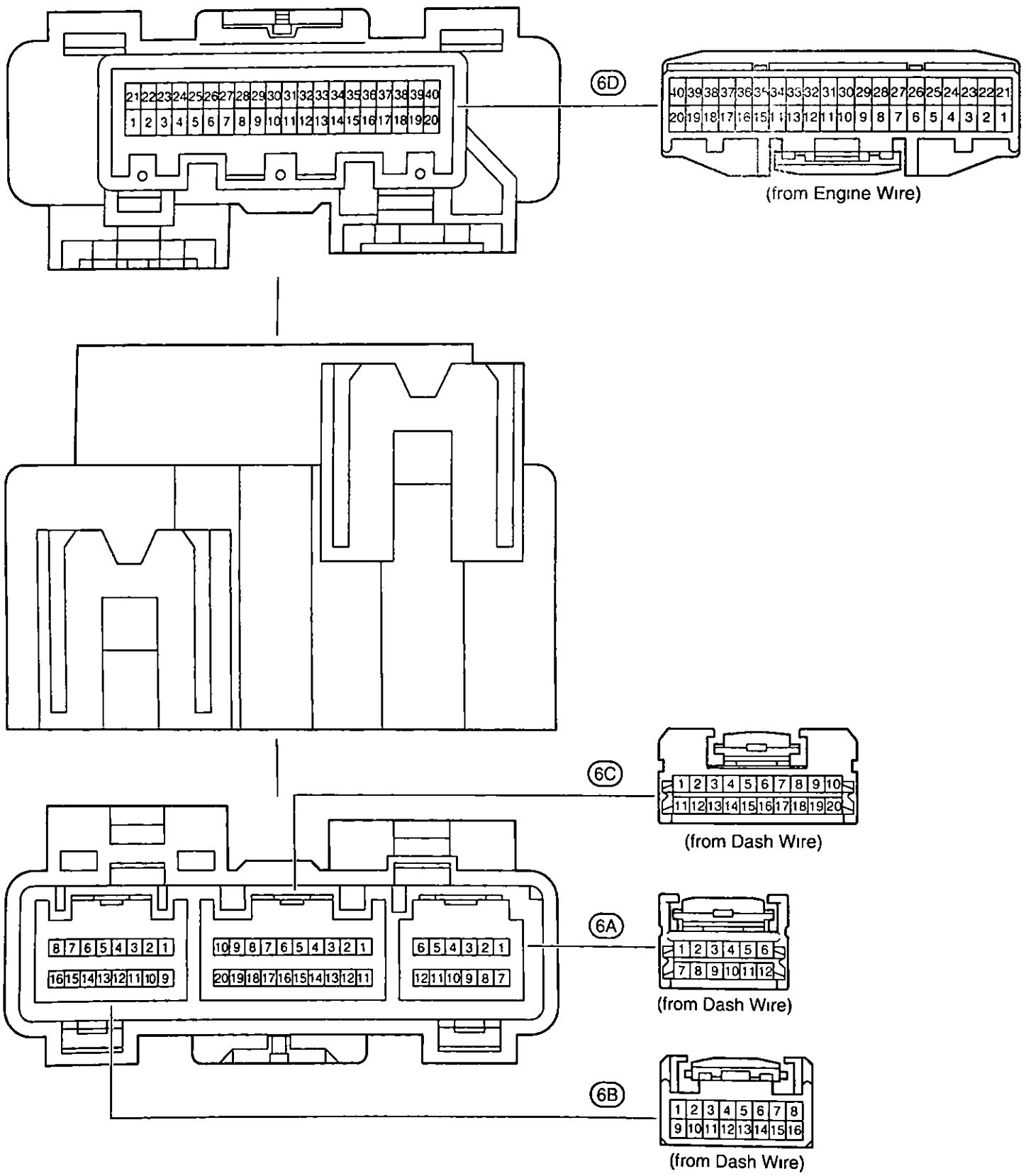

[J/B No.6 Inner Circuit]

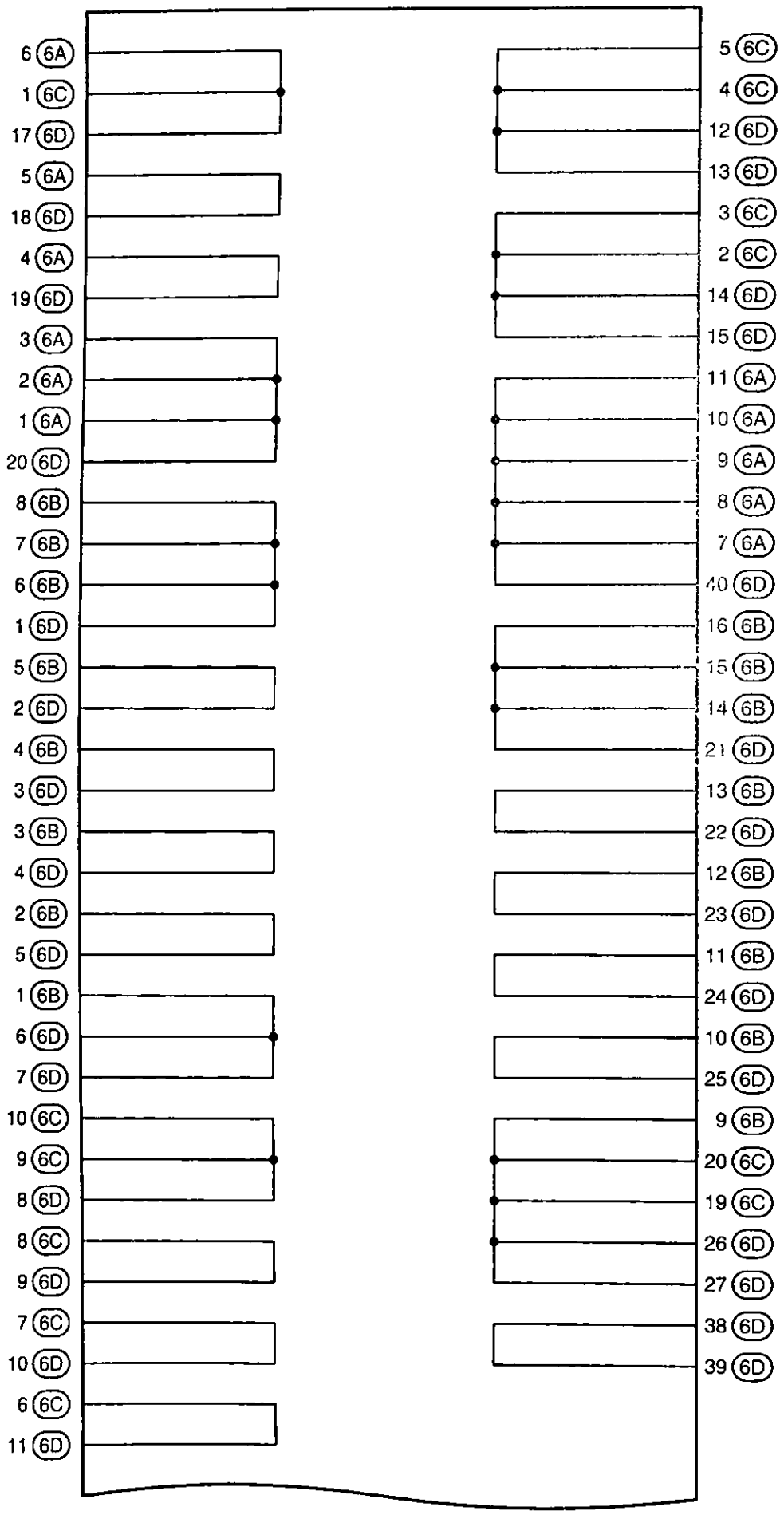

(Cont. next page)

(Cont'd)

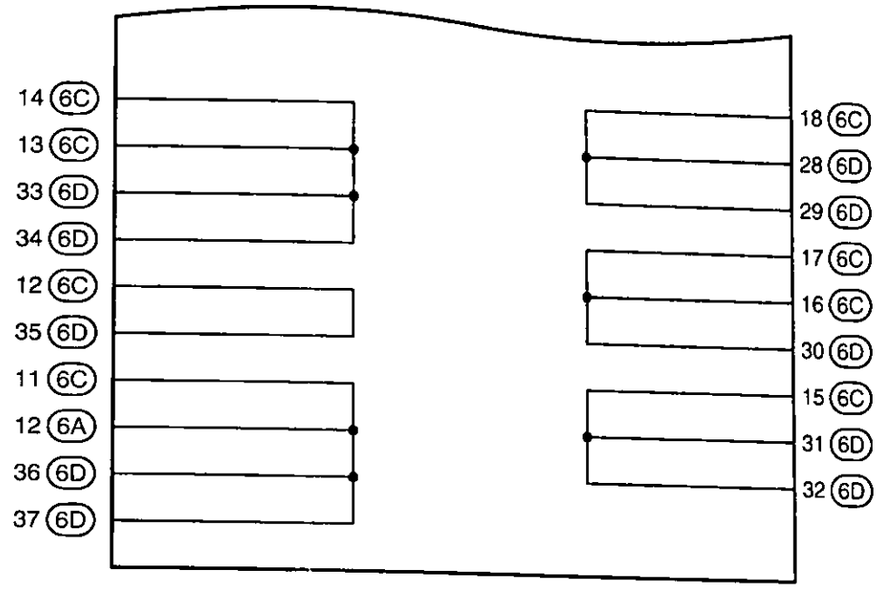
14 6C
13 6C
33 6D
34 6D
12 6C
35 6D
11 6C
12 6A
36 6D
37 6D
18 6C
28 6D
29 6D
17 6C
16 6C
30 6D
15 6C
31 6D
32 6D

F RELAY LOCATIONS

⬭ : J/B No.7	Behind the Glove Box (See Page 20)

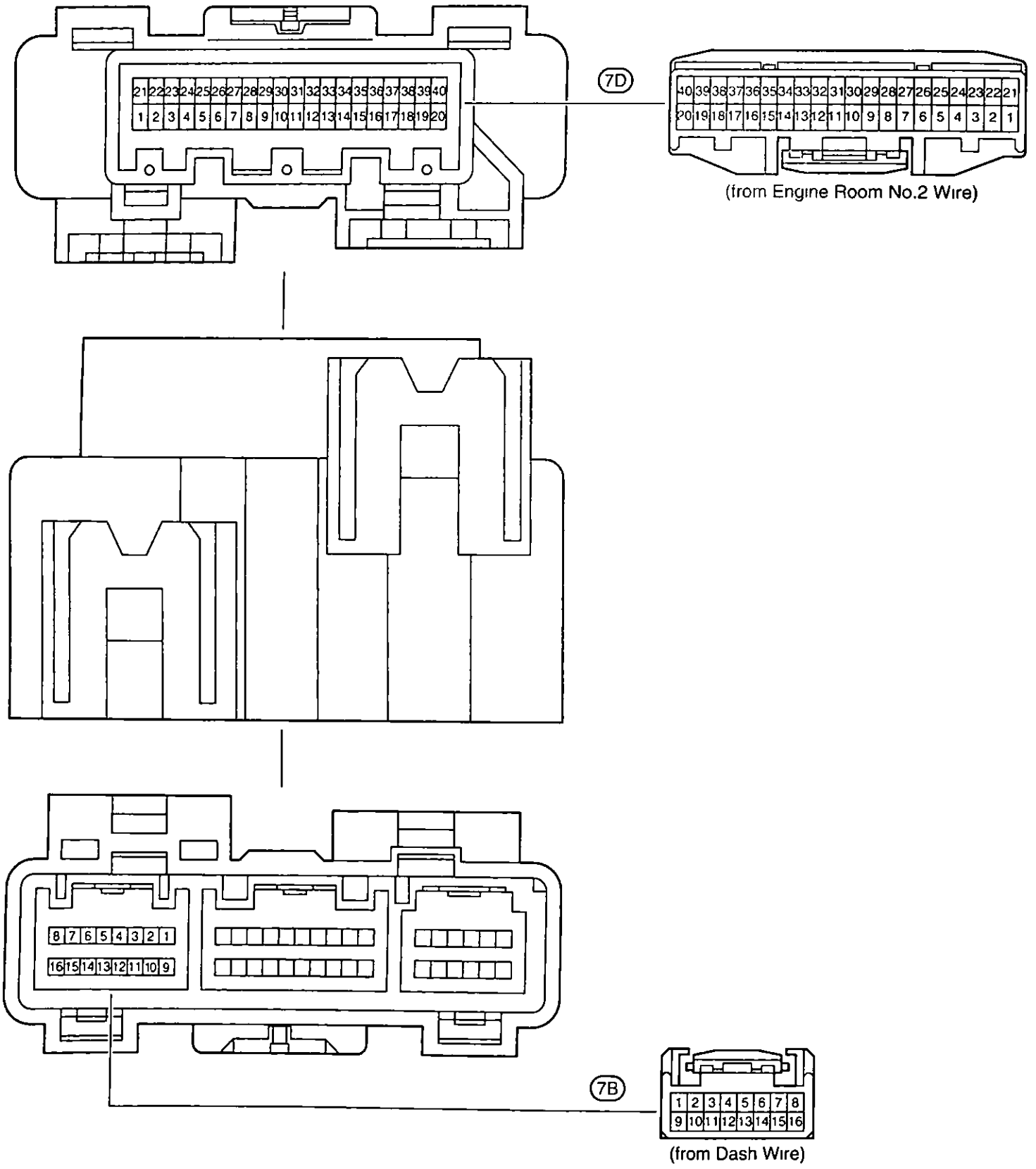

F RELAY LOCATIONS

[J/B No.7 Inner Circuit]

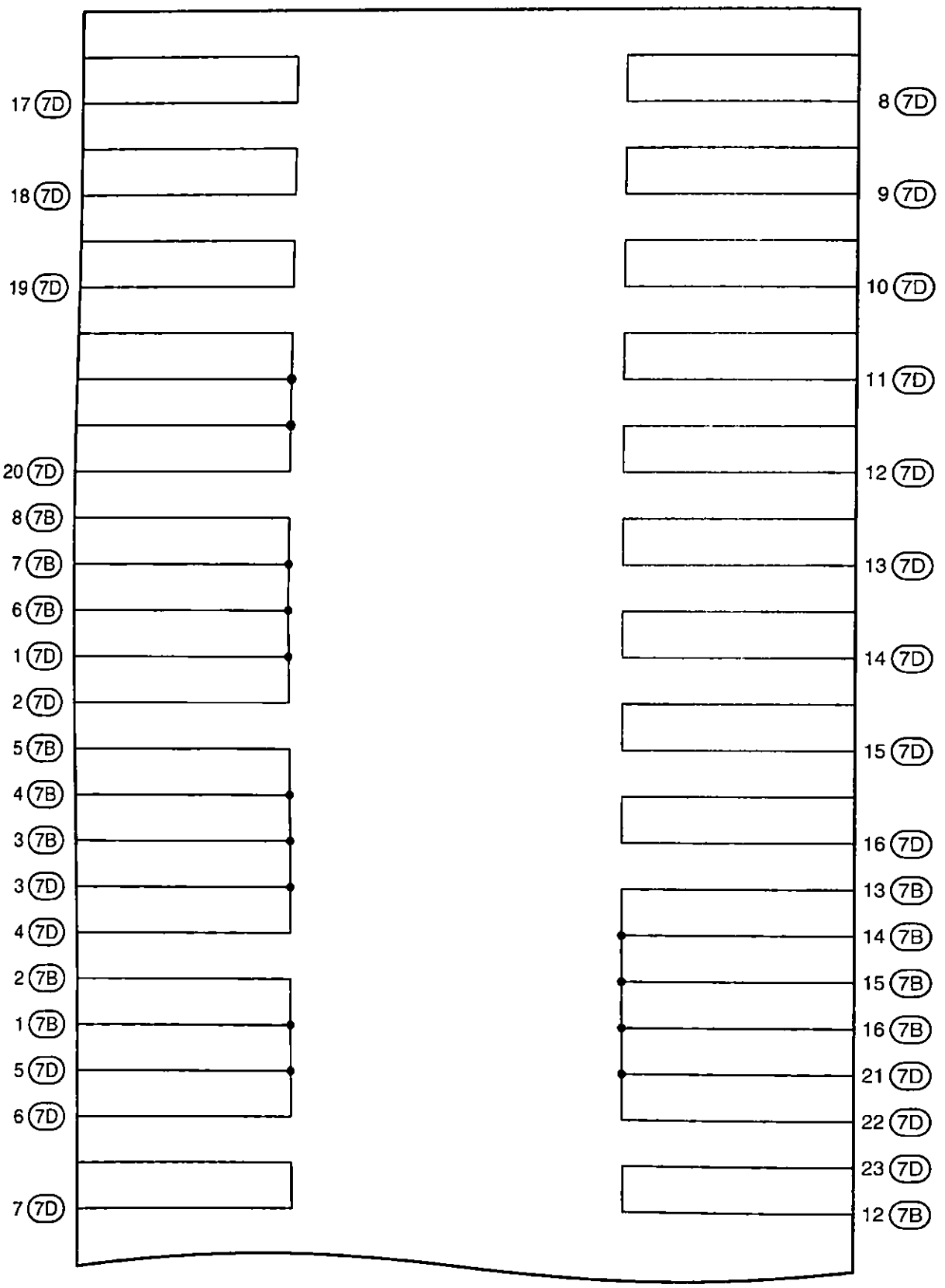

(Cont. next page)

(Cont'd)

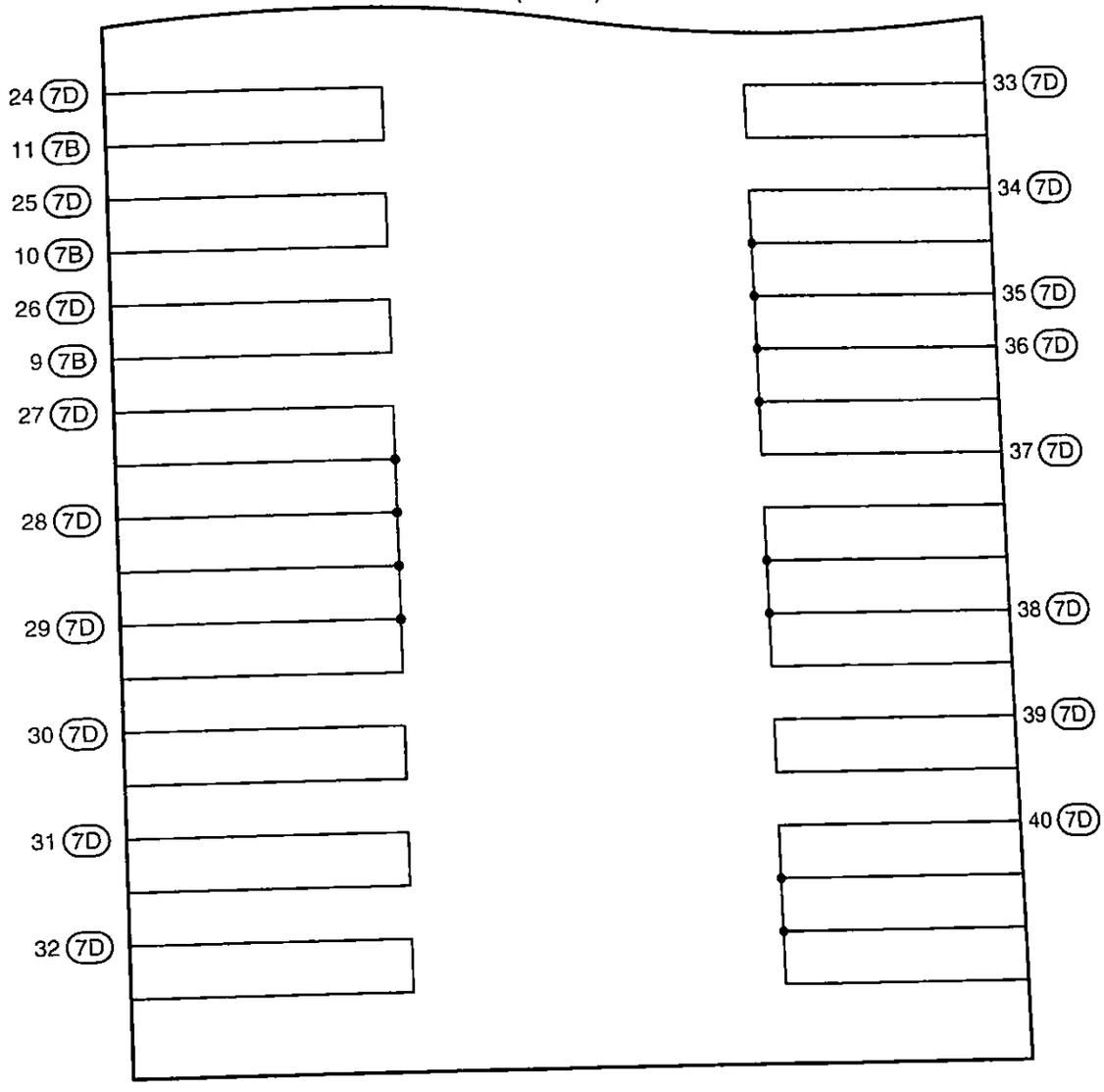
24 7D
11 7B
25 7D
10 7B
26 7D
9 7B
27 7D
28 7D
29 7D
30 7D
31 7D
32 7D
33 7D
34 7D
35 7D
36 7D
37 7D
38 7D
39 7D
40 7D

Position of Parts in Engine Compartment

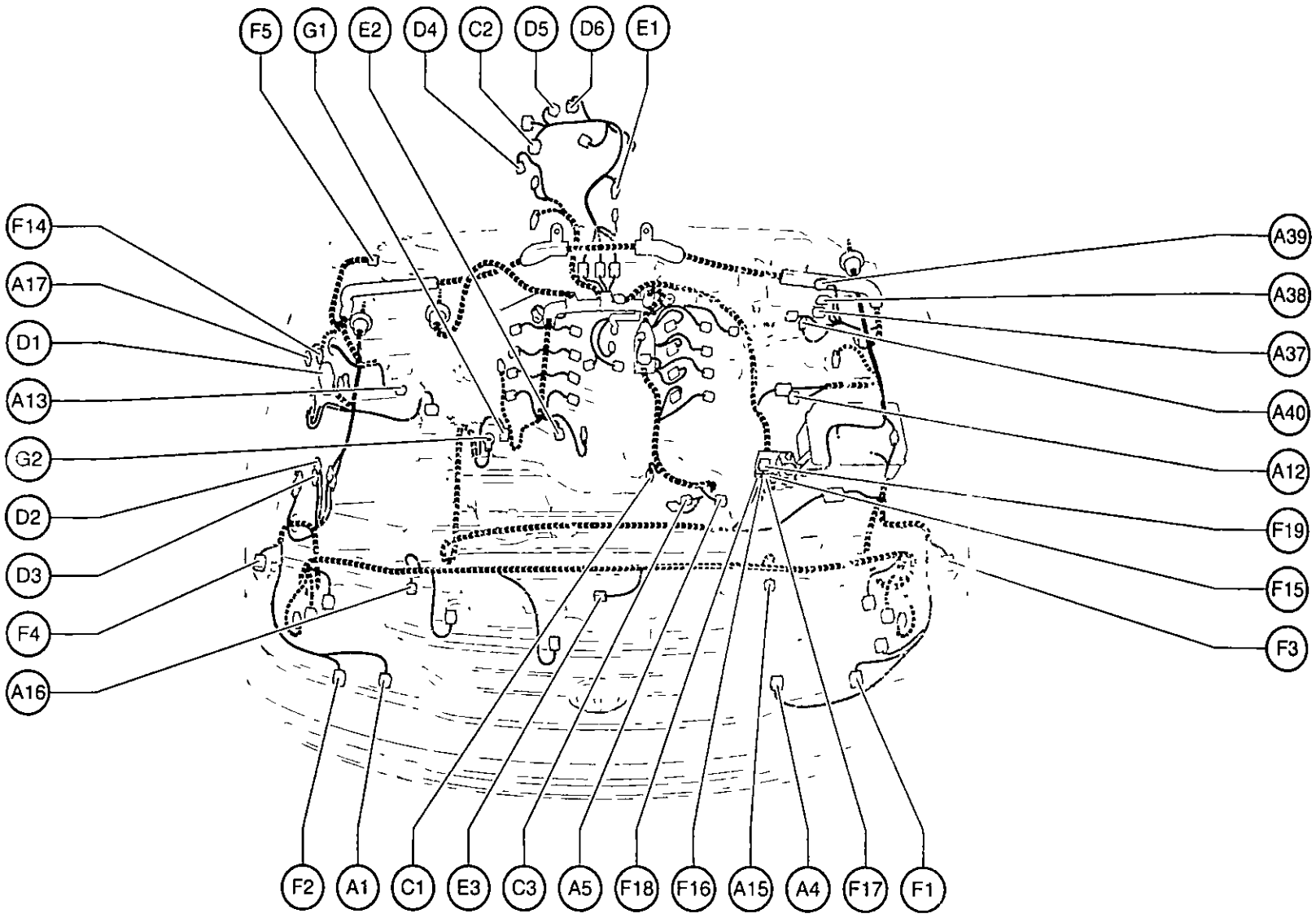

A 1 A/C Ambient Temp. Sensor
A 4 Pressure SW
A 5 A/C Lock Sensor
A/C Magnetic Clutch
A12 ABS Speed Sensor Front LH
A13 ABS Speed Sensor Front RH
A15 Airbag Sensor Front LH
A16 Airbag Sensor Front RH
A17 Auto Antenna Motor
A37 ABS & BA & TRAC & VSC Actuator
A38 ABS & BA & TRAC & VSC Actuator
A39 ABS & BA & TRAC & VSC Actuator
A40 ABS & BA & TRAC & VSC Actuator

C 1 Camshaft Position Sensor
C 2 Center Diff. Lock Control Motor
C 3 Crankshaft Position Sensor

D 1 Data Link Connector 1
D 2 Daytime Running Light Relay No.3
D 3 Daytime Running Light Relay No.3
D 4 Detection SW (Center Diff. Lock)
D 5 Detection SW (Transfer L Position)
D 6 Detection SW (Transfer Neutral Position)

E 1 Electronically Controlled Transmission Solenoid
E 2 Engine Coolant Temp. Sensor
E 3 Engine Hood Courtesy SW

F 1 Front Fog Light LH
F 2 Front Fog Light RH
F 3 Front Turn Signal Light LH
Side Marker Light LH
F 4 Front Turn Signal Light RH
Side Marker Light RH
F 5 Front Wiper Motor
F14 Fuel Pump Resistor
F15 Fusible Link Block
F16 Fusible Link Block
F17 Fusible Link Block
F18 Fusible Link Block
F19 Fusible Link Block

G 1 Generator
G 2 Generator

Position of Parts in Engine Compartment

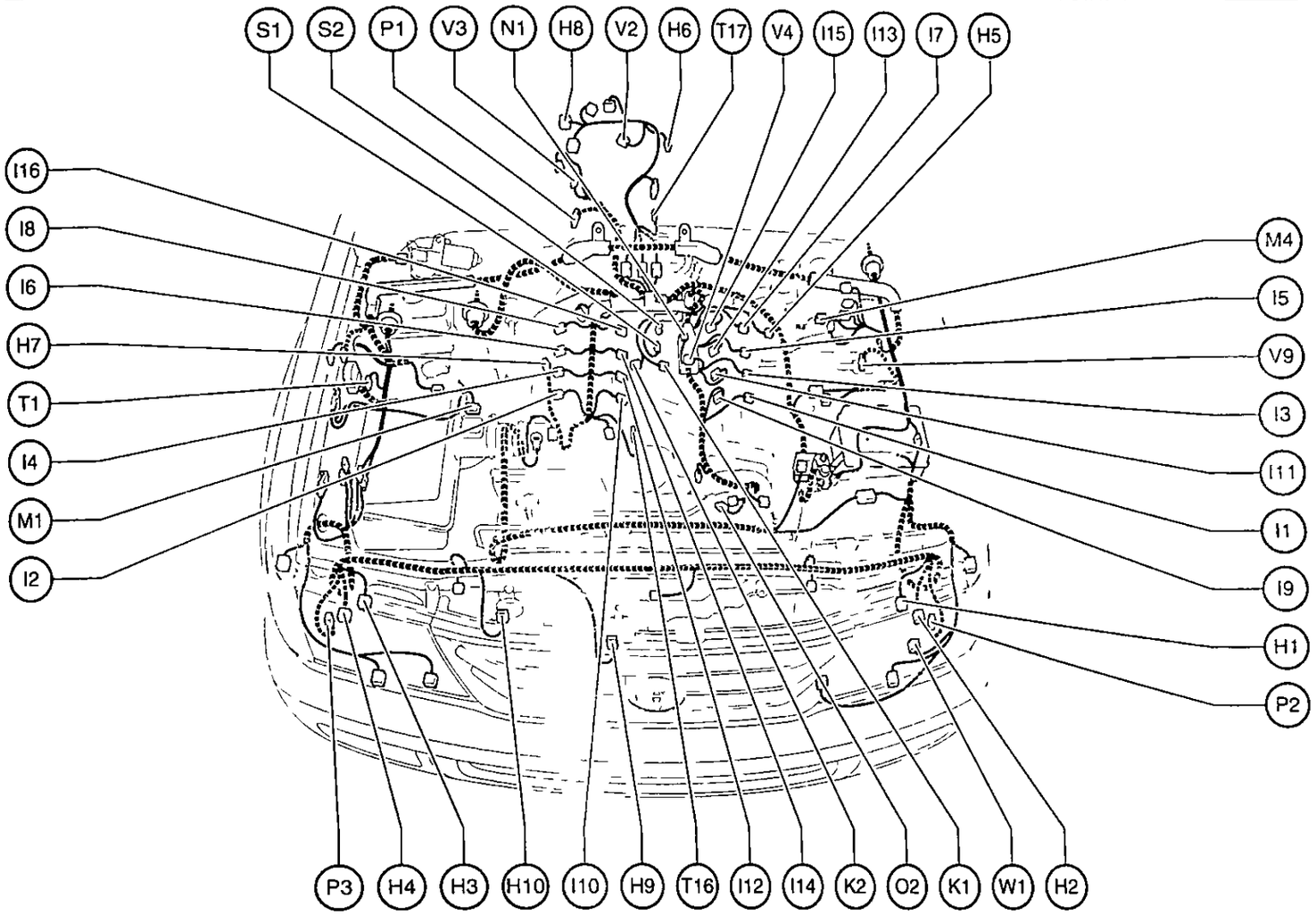

H 1 Headlight LH (High)
H 2 Headlight LH (Low)
H 3 Headlight RH (High)
H 4 Headlight RH (Low)
H 5 Heated Oxygen Sensor (Bank 1 Sensor 1)
H 6 Heated Oxygen Sensor (Bank 1 Sensor 2)
H 7 Heated Oxygen Sensor (Bank 2 Sensor 1)
H 8 Heated Oxygen Sensor (Bank 2 Sensor 2)
H 9 Horn LH
H10 Horn RH

I 1 Ignition Coil and Igniter No.1
I 2 Ignition Coil and Igniter No.2
I 3 Ignition Coil and Igniter No.3
I 4 Ignition Coil and Igniter No.4
I 5 Ignition Coil and Igniter No.5
I 6 Ignition Coil and Igniter No.6
I 7 Ignition Coil and Igniter No.7
I 8 Ignition Coil and Igniter No.8
I 9 Injector No.1
I 10 Injector No.2
I 11 Injector No.3
I 12 Injector No.4
I 13 Injector No.5
I 14 Injector No.6
I 15 Injector No.7
I 16 Injector No.8

K 1 Knock Sensor 1
K 2 Knock Sensor 2

M 1 Mass Air Flow Meter
M 4 Master Cylinder Pressure Sensor

N 1 Noise Filter (Ignition)

O 2 Oil Pressure Sender

P 1 Park/Neutral Position SW
P 2 Parking Light LH
P 3 Parking Light RH

S 1 Starter
S 2 Starter

T 1 Theft Deterrent Horn
T16 Throttle Control Motor and Sensor
T17 Turbine Speed Sensor

V 2 Vehicle Speed Sensor (Combination Meter)
V 3 Vehicle Speed Sensor
(Electronically Controlled Transmission)
V 4 VSV (EVAP)
V 9 VSV (Canister Closed Valve)

W 1 Washer Motor

Position of Parts in Instrument Panel

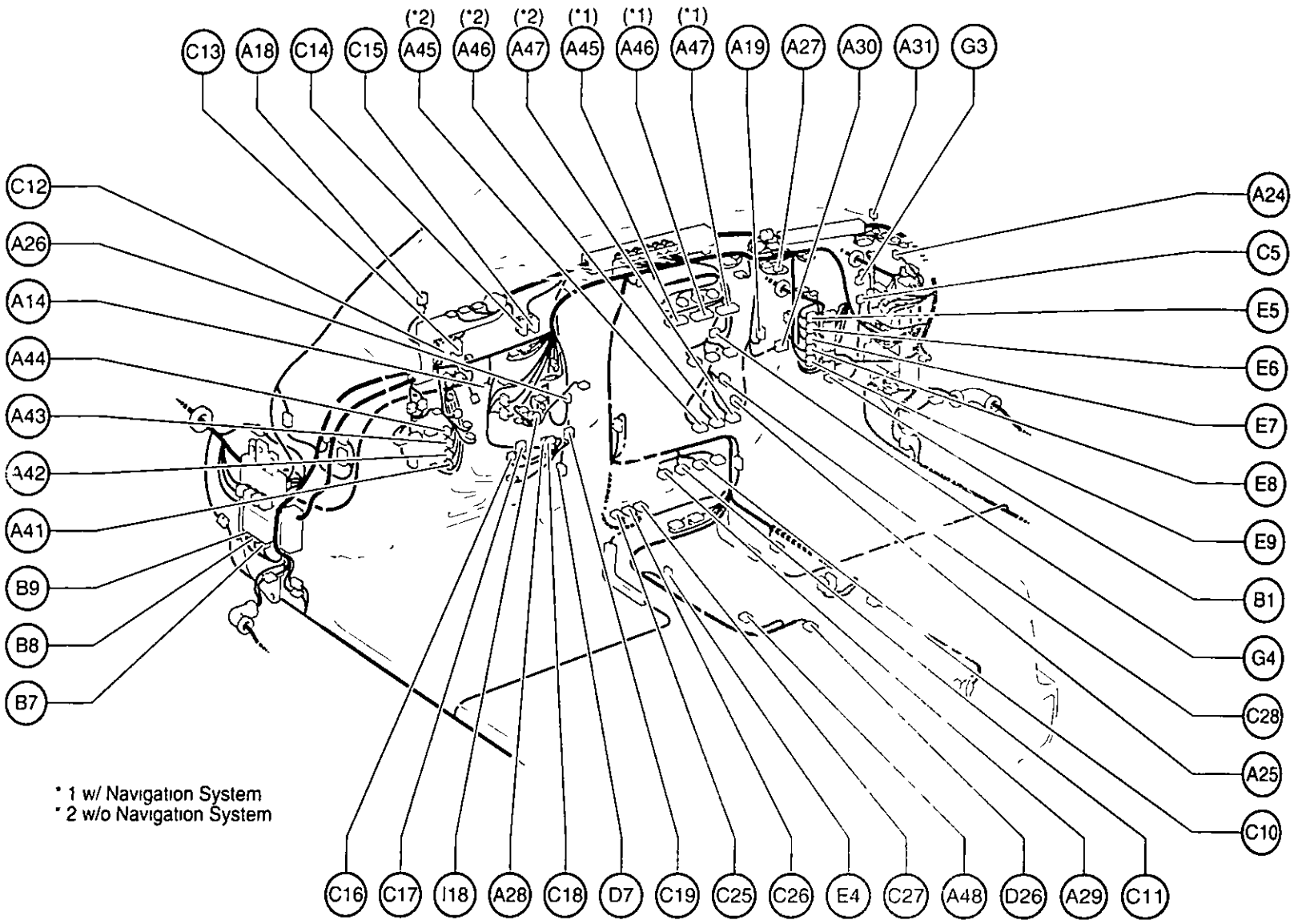

* 1 w/ Navigation System
* 2 w/o Navigation System

A 14 Accel Position Sensor
A 18 A/C Solar Sensor
A 19 A/C Thermistor
A 24 Air Inlet Control Servo Motor
A 25 Air Mix Control Servo Motor
A 26 Air Vent Mode Control Servo Motor
A 27 Airbag Squib (Front Passenger Airbag Assembly)
A 28 Airbag Squib (Steering Wheel Pad)
A 29 Ashtray Illumination
A 30 Auto Antenna Control Relay
A 31 Automatic Light Control Sensor
A 41 ABS & BA & TRAC & VSC ECU
A 42 ABS & BA & TRAC & VSC ECU
A 43 ABS & BA & TRAC & VSC ECU
A 44 ABS & BA & TRAC & VSC ECU
A 45 A/C Control Assembly
A 46 A/C Control Assembly
A 47 A/C Control Assembly
A 48 A/T Shift Lever Illumination
Shift Lock Control ECU

B 1 Blower Motor Controller
B 7 Body ECU
B 8 Body ECU
B 9 Body ECU

C 5 Center Diff. Lock Control Relay
C 10 Cigarette Lighter
C 11 Cigarette Lighter Illumination
C 12 Combination Meter
C 13 Combination Meter
C 14 Combination Meter
C 15 Combination Meter
C 16 Combination SW
C 17 Combination SW
C 18 Combination SW
C 19 Combination SW
C 25 Center Airbag Sensor Assembly
C 26 Center Airbag Sensor Assembly
C 27 Center Airbag Sensor Assembly
C 28 Center Cluster Integration Panel

D 7 Data Link Connector 3
D 26 DVD Automatic Changer

E 4 Electronically Controlled Transmission Pattern Select SW
E 5 Engine Control Module
E 6 Engine Control Module
E 7 Engine Control Module
E 8 Engine Control Module
E 9 Engine Control Module

G 3 Glove Box Light
G 4 Gateway ECU

I 18 Ignition SW

Position of Parts in Instrument Panel

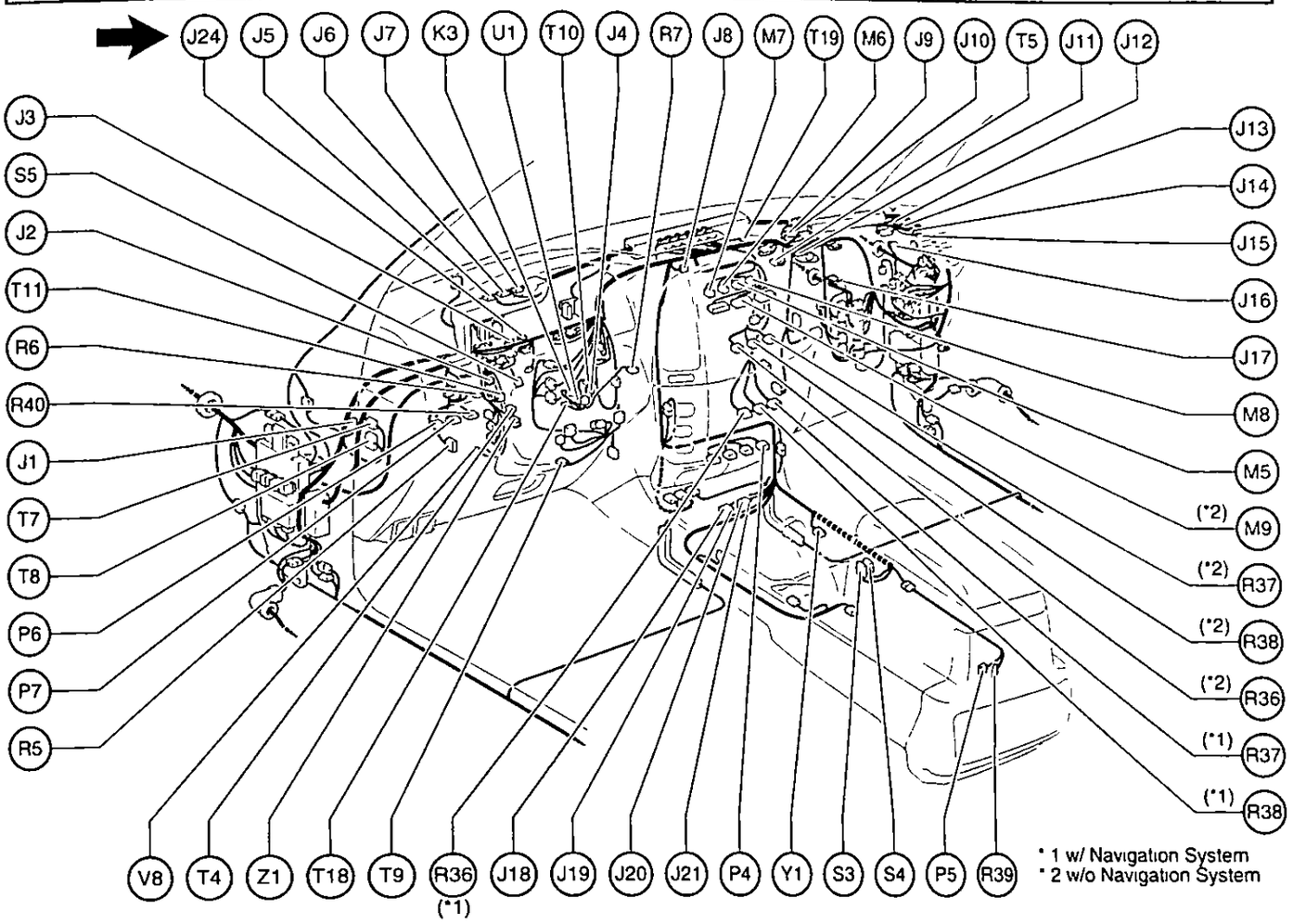

J 1 Junction Connector
J 2 Junction Connector
J 3 Junction Connector
J 4 Junction Connector
J 5 Junction Connector
J 6 Junction Connector
J 7 Junction Connector
J 8 Junction Connector
J 9 Junction Connector
J 10 Junction Connector
J 11 Junction Connector
J 12 Junction Connector
J 13 Junction Connector
J 14 Junction Connector
J 15 Junction Connector
J 16 Junction Connector
J 17 Junction Connector
J 18 Junction Connector
J 19 Junction Connector
J 20 Junction Connector
J 21 Junction Connector
J 24 Junction Connector

K 3 Key Interlock Solenoid

M 5 Multi-Display
M 6 Multi-Display
M 7 Multi-Display
M 8 Multi-Display
M 9 Multi-Display

P 4 Power Outlet (Front)
P 5 Power Outlet (Rear Console Box)
P 6 Power Quarter Window SW LH
P 7 Power Quarter Window SW RH

R 5 Remote Control Mirror SW
R 6 Rheostat
R 7 Room Temp Sensor (Front)
R 36 Radio and Player
R 37 Radio and Player
R 38 Radio and Player
R 39 Rear Seat Audio Controller
R 40 Roll Sensing of Curtain Shield Airbags Cutoff SW

S 3 Seat Heater SW (Driver's Seat)
S 4 Seat Heater SW (Front Passenger's Seat)
S 5 Stop Light SW

T 4 Telescopic Motor
T 5 Theft Deterrent ECU
T 7 Tilt and Telescopic ECU
T 8 Tilt and Telescopic ECU
T 9 Tilt Motor
T 10 Ignition Key Cylinder Light
Transponder Key Amplifier
T 11 Turn Signal Flasher
T 18 Towing Brake Controller
T 19 Transponder Key Computer

U 1 Unlock Warning SW

V 8 VSC Warning Buzzer

Y 1 Yaw Rate Sensor

Z 1 Option Connector (Glass Breakage Sensor)

Position of Parts in Body

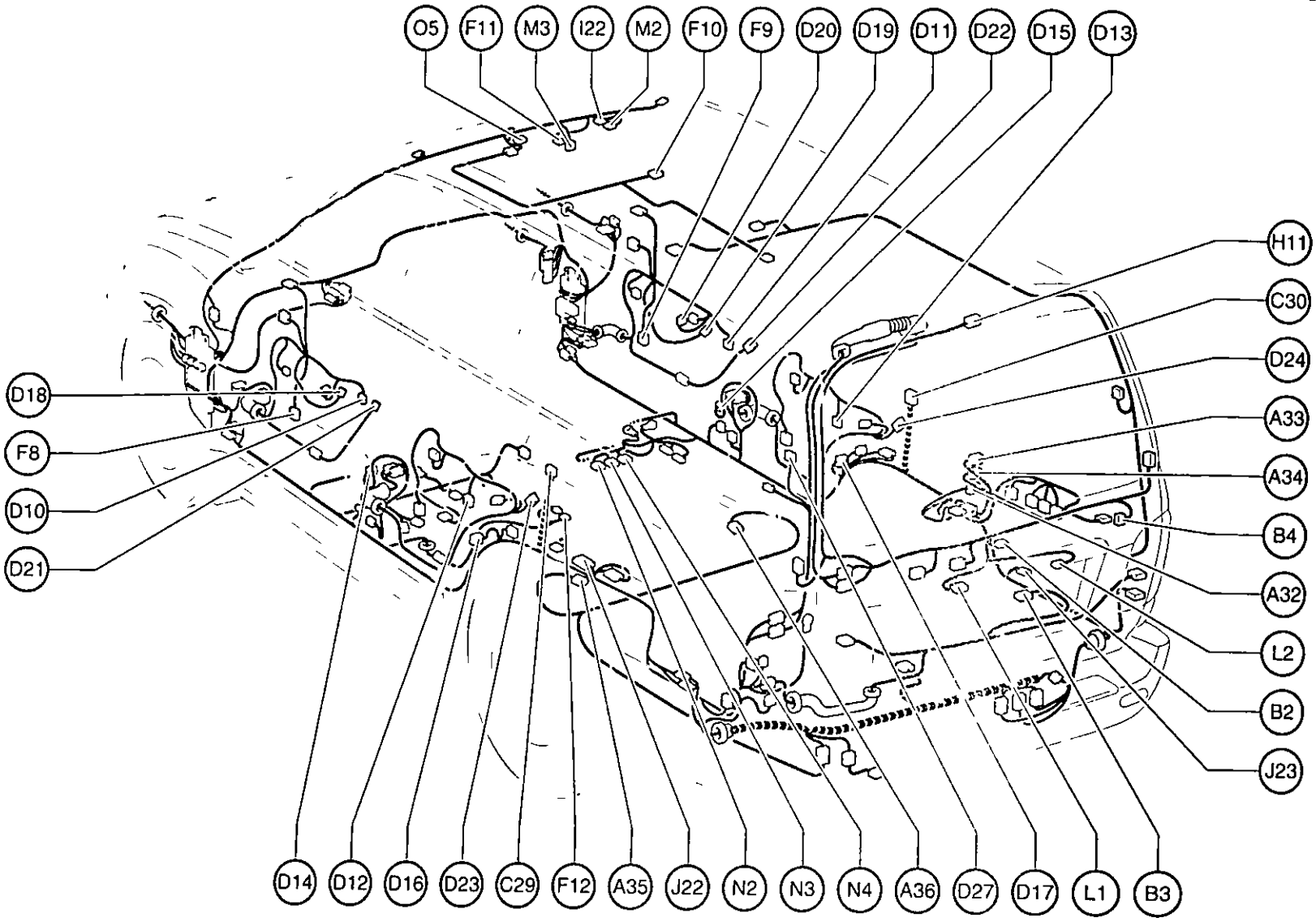

A32 A/C Amplifier (Rear)
A33 A/C Amplifier (Rear)
A34 A/C Amplifier (Rear)
A35 ABS Speed Sensor Rear LH
A36 ABS Speed Sensor Rear RH

B 2 Back Door Courtesy SW
B 3 Back Door Key Lock and Unlock SW
B 4 Back Door Lock Motor
Back Door Unlock Detection SW

C29 Curtain Shield Airbag Squib LH
C30 Curtain Shield Airbag Squib RH

D10 Door Courtesy Light Front LH
D11 Door Courtesy Light Front RH
D12 Door Courtesy Light Rear LH
D13 Door Courtesy Light Rear RH
D14 Door Courtesy SW Front LH
D15 Door Courtesy SW Front RH
D16 Door Courtesy SW Rear LH
D17 Door Courtesy SW Rear RH
D18 Door Key Lock and Unlock SW LH
D19 Door Key Lock and Unlock SW RH
D20 Door Lock Control SW RH
D21 Door Lock Motor Front LH
Door Unlock Detection SW Front LH
D22 Door Lock Motor Front RH
Door Unlock Detection SW Front RH
D23 Door Lock Motor Rear LH
Door Unlock Detection SW Rear LH
D24 Door Lock Motor Rear RH
Door Unlock Detection SW Rear RH
D27 Door Control Receiver

F 8 Front Door Speaker LH
F 9 Front Door Speaker RH
F 10 Front Interior Light
Rear Personal Light
F 11 Front Personal Light
F 12 Fuel Pump
Fuel Sender

H 11 High Mounted Stop Light

I 22 Inner Mirror

J 22 Junction Connector
J 23 Junction Connector

L 1 License Plate Light LH
L 2 License Plate Light RH

M 2 Moon Roof Control ECU
M 3 Moon Roof Control SW

N 2 Navigation ECU
N 3 Navigation ECU
N 4 Navigation ECU

O 5 Overhead J/B

Position of Parts in Body

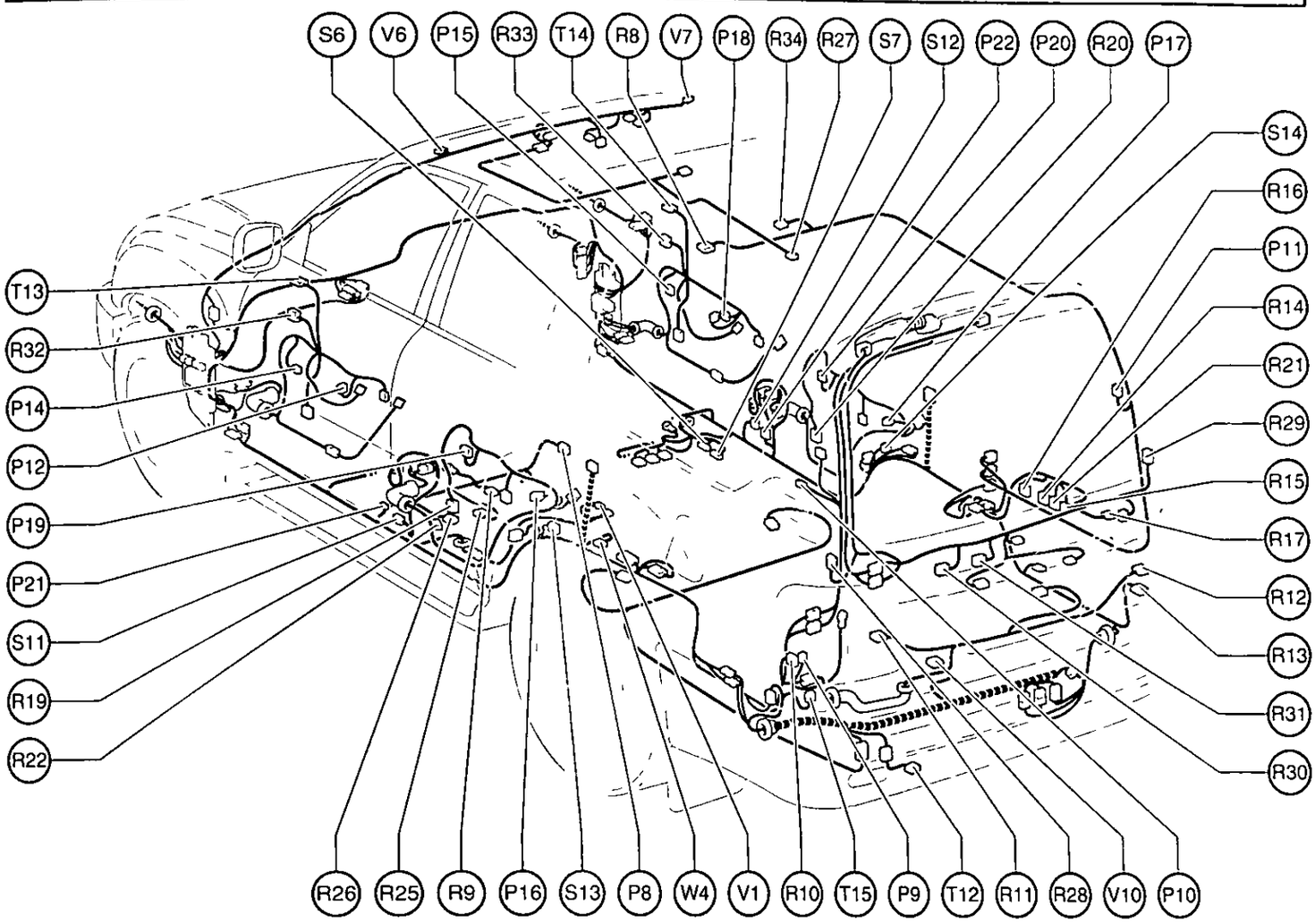

P 8 Parking Brake SW
P 9 Power Outlet (Luggage Compartment)
P10 Power Vent Window Motor LH
P11 Power Vent Window Motor RH
P12 Power Window Master SW
P14 Power Window Motor Front LH
P15 Power Window Motor Front RH
P16 Power Window Motor Rear LH
P17 Power Window Motor Rear RH
P18 Power Window Control SW Front RH
P19 Power Window Control SW Rear LH
P20 Power Window Control SW Rear RH
P21 Pretensioner LH
P22 Pretensioner RH

R 8 Rear A/C Control SW
R 9 Rear Air Mix Control Servo Motor
R10 Rear Combination Light LH
R11 Rear Combination Light LH
R12 Rear Combination Light RH
R13 Rear Combination Light RH
R14 Rear Cooler Blower Motor
R15 Rear Cooler Magnetic Valve
R16 Rear Cooler Power Transistor
R17 Rear Cooler Relay
R19 Rear Door Speaker LH
R20 Rear Door Speaker RH
R21 Rear Evaporator Temp. Sensor
R22 Rear Heater Blower Motor
R25 Rear Heater Power Transistor
R26 Rear Inlet Air Temp. Sensor
R27 Rear Interior Light
R28 Rear Window Defogger
R29 Rear Window Defogger
R30 Rear Wiper Motor
R31 Rear Wiper Relay
R32 Remote Control Mirror LH
R33 Remote Control Mirror RH
R34 Room Temp. Sensor (Rear)

S 6 Stereo Component Amplifier
S 7 Stereo Component Amplifier
S11 Side Airbag Sensor Front LH
S12 Side Airbag Sensor Front RH
S13 Side Airbag Sensor Rear LH
S14 Side Airbag Sensor Rear RH

T12 Trailer Socket
T13 Tweeter LH
T14 Tweeter RH
T15 Towing Converter Relay

V 1 Vapor Pressure Sensor
V 6 Vanity Light LH
V 7 Vanity Light RH
V10 VSV (Pressure Switching Valve)

W 4 Woofer (Speaker)

Position of Parts in Seat

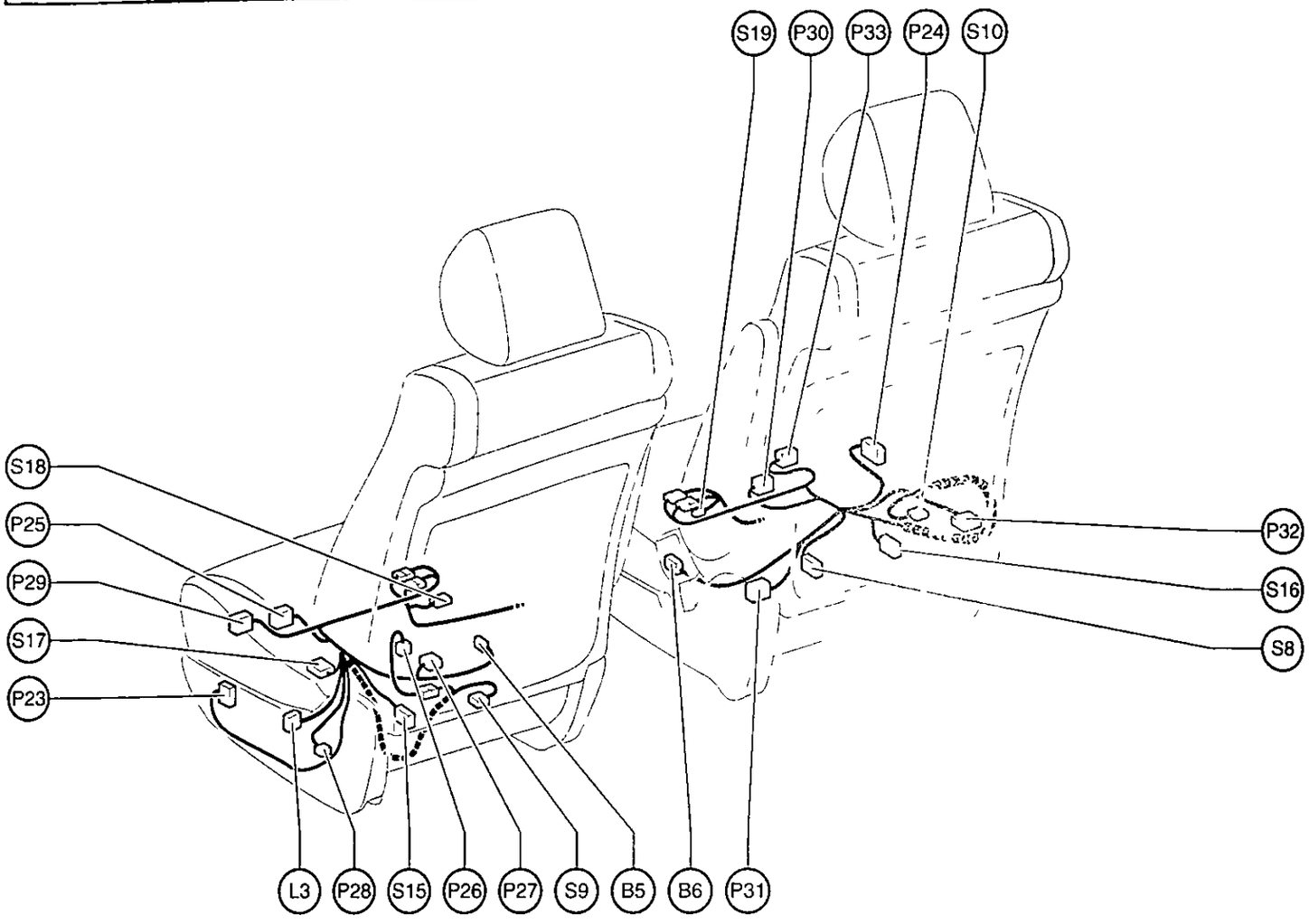

B 5 Buckle SW LH
B 6 Buckle SW RH

L 3 Lumbar Support Control SW (Driver's Seat)

P23 Power Seat Control SW (Driver's Seat)
P24 Power Seat Control SW (Front Passenger's Seat)
P25 Power Seat Motor (Driver's Seat Front Vertical Control)
P26 Power Seat Motor
(Driver's Seat Lumbar Support Control)
P27 Power Seat Motor (Driver's Seat Rear Vertical Control)
P28 Power Seat Motor (Driver's Seat Reclining Control)
P29 Power Seat Motor (Driver's Seat Slide Control)
P30 Power Seat Motor
(Front Passenger's Seat Front Vertical Control)
P31 Power Seat Motor
(Front Passenger's Seat Rear Vertical Control)
P32 Power Seat Motor
(Front Passenger's Seat Reclining Control)
P33 Power Seat Motor
(Front Passenger's Seat Slide Control)

S 8 Seat Belt Warning Occupant Detection Sensor
S 9 Seat Heater (Driver's Seat)
S10 Seat Heater (Front Passenger's Seat)
S15 Seat Heater (Driver's Seat Cushion)
S16 Seat Heater (Front Passenger's Seat Cushion)
S17 Seat Position Sensor
S18 Side Airbag Squib LH
S19 Side Airbag Squib RH

G ELECTRICAL WIRING ROUTING

▭ : Location of Connector Joining Wire Harness and Wire Harness

▽ : Location of Ground Points

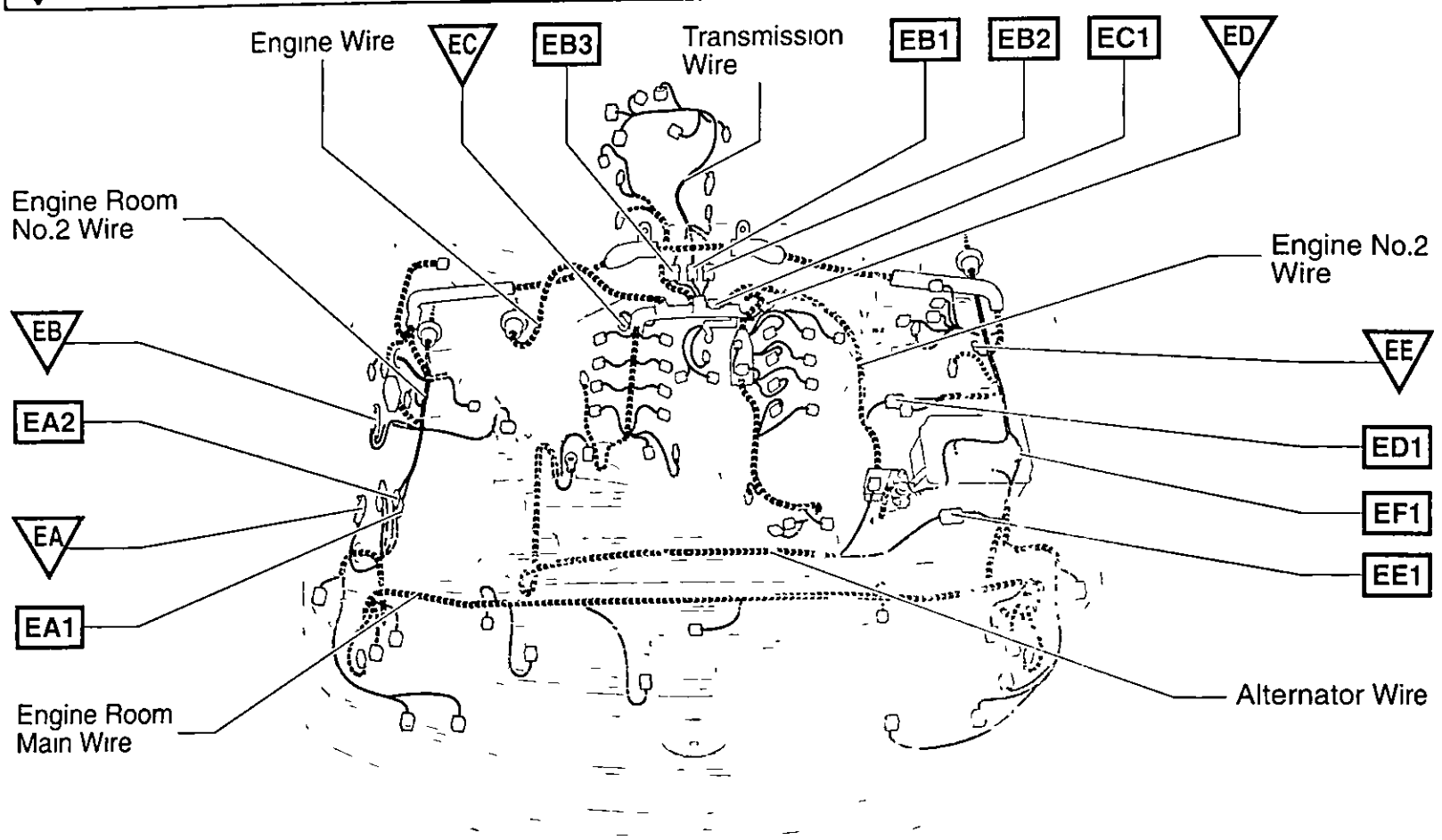

○ : Location of Splice Points

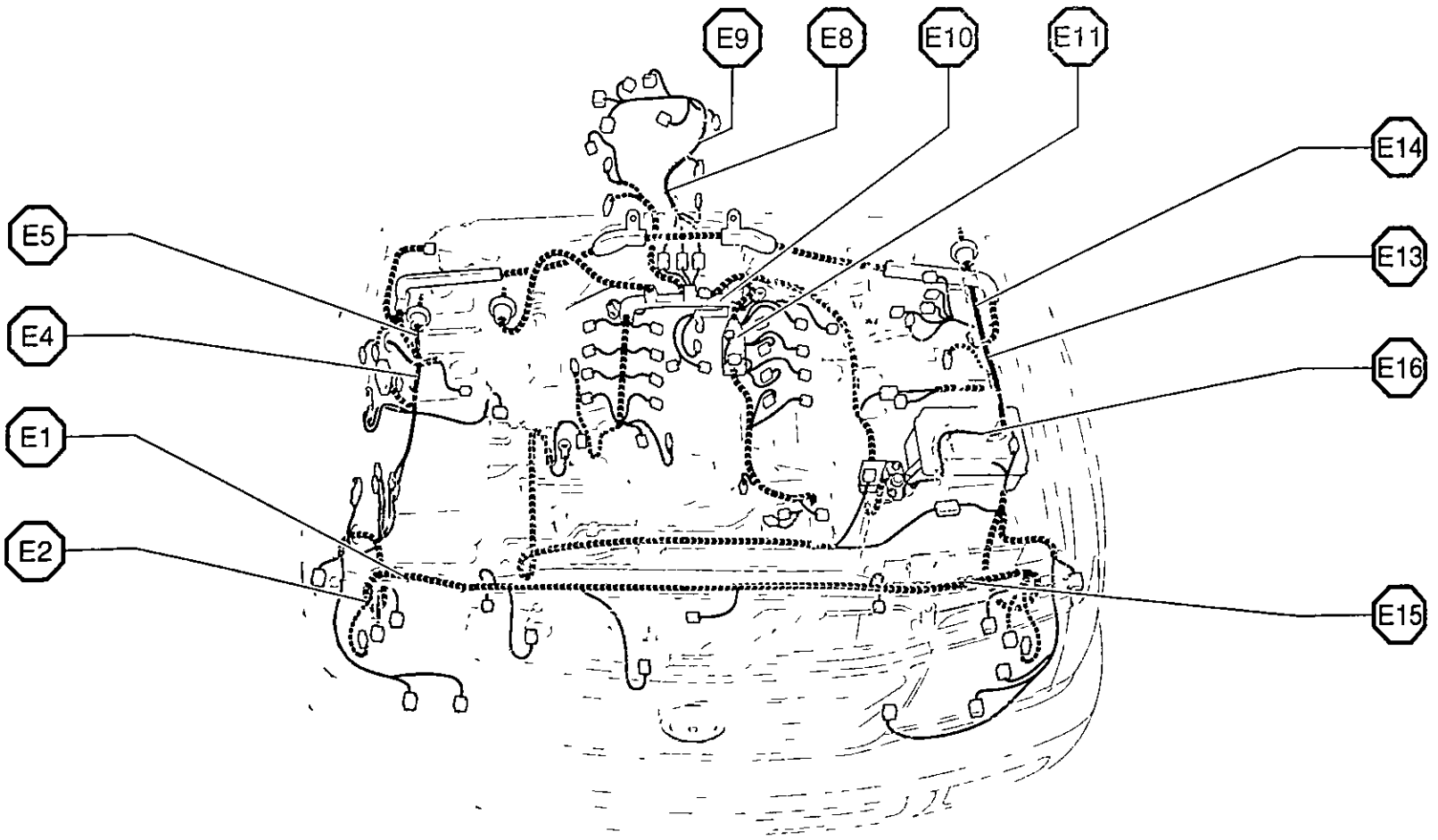

Connector Joining Wire Harness and Wire Harness

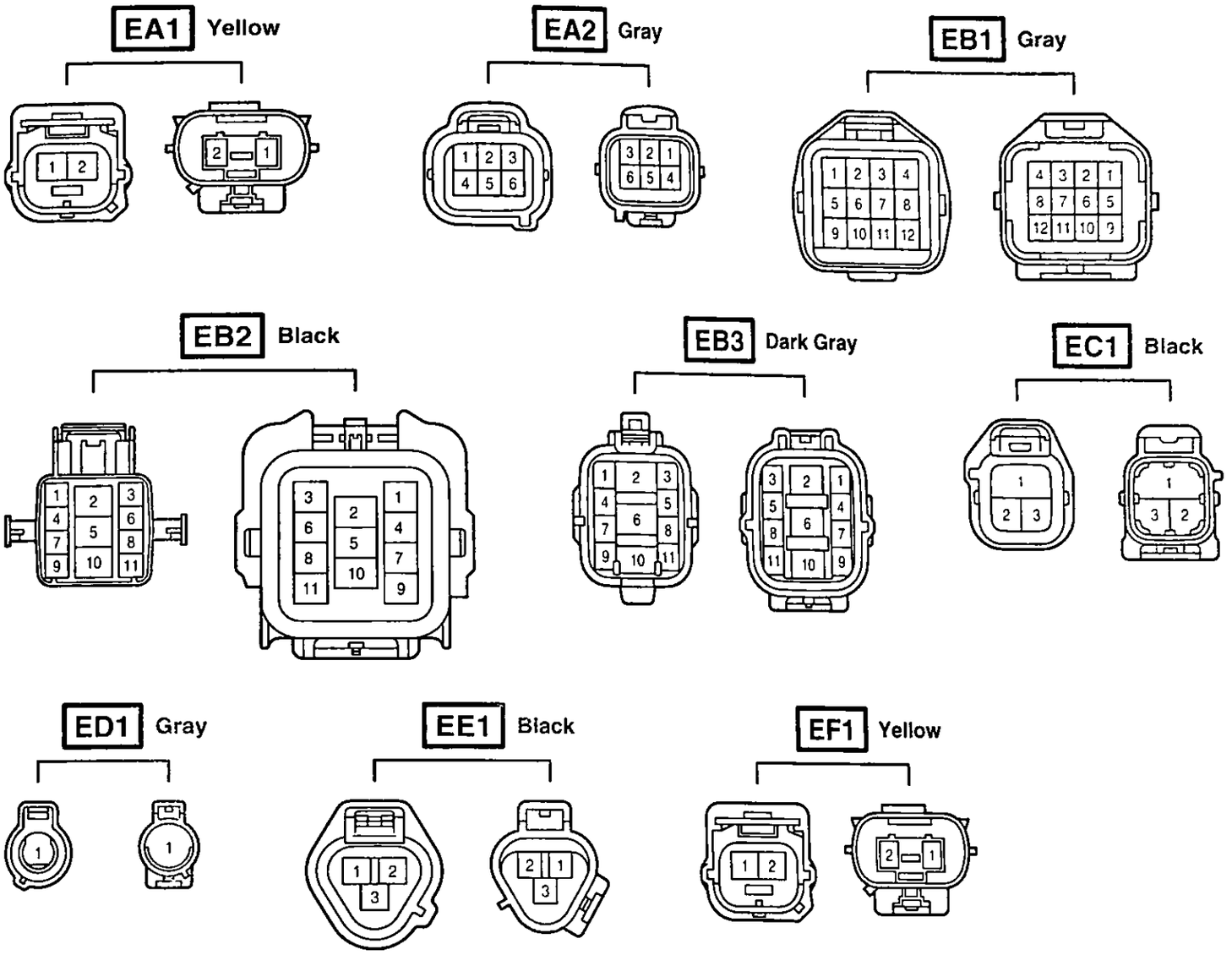

Code	Joining Wire Harness and Wire Harness (Connector Location)
EA1	Engine Room Main Wire and Engine Room No.2 Wire (Engine Compartment Right)
EA2	
EB1	Engine Wire and Transmission Wire (On the Transmission)
EB2	
EB3	
EC1	Engine No 2 Wire and Engine Wire (On the Transmission)
ED1	Engine No 2 Wire and Engine Room No 2 Wire (Near the Engine Room J/B)
EE1	Engine Room Main Wire and Alternator Wire (Near the Battery)
EF1	Engine Room No.2 Wire and Engine Room Main Wire (Under the Engine Room J/B)

□ : Location of Connector Joining Wire Harness and Wire Harness

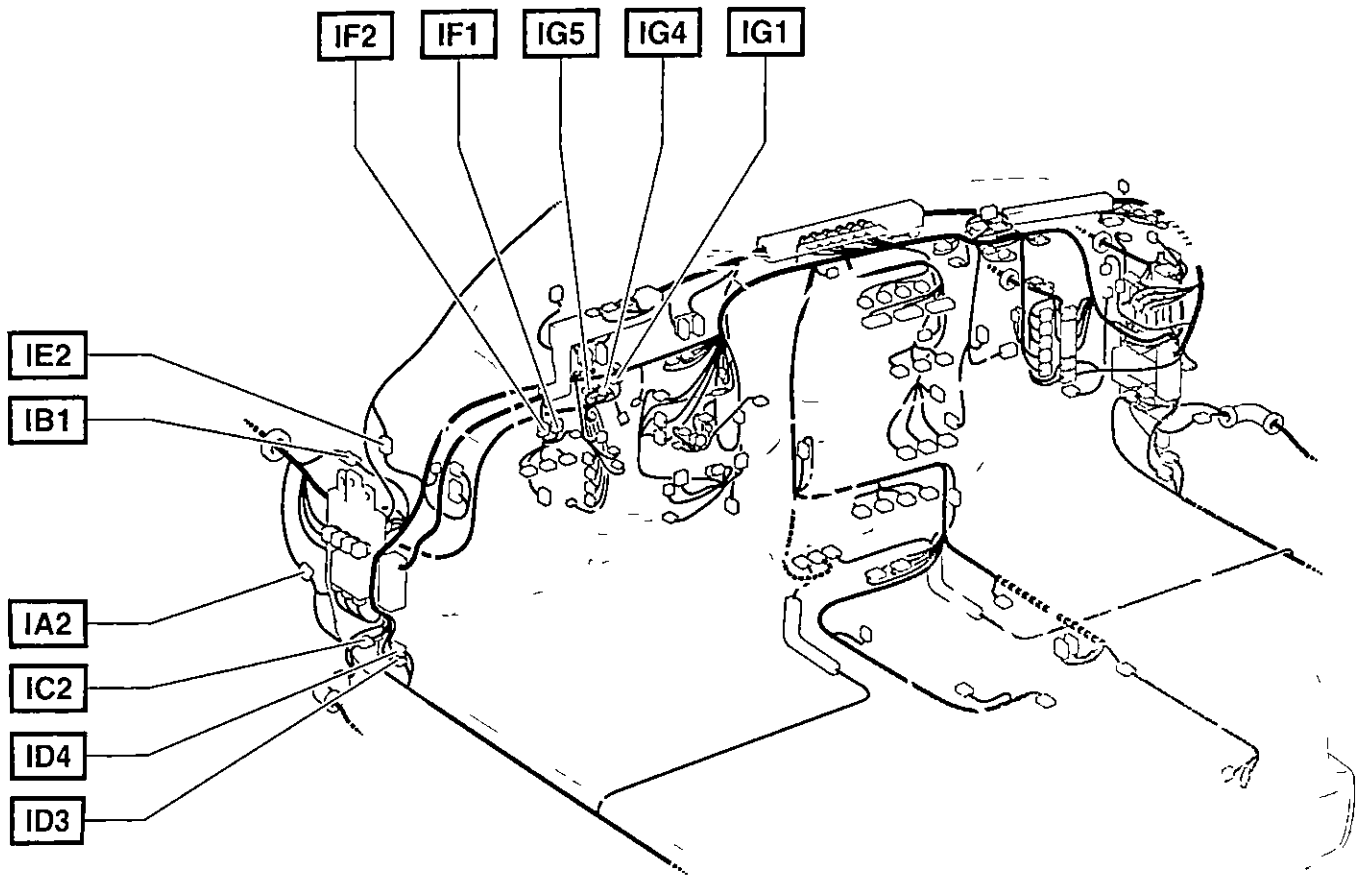

▽ : Location of Ground Points

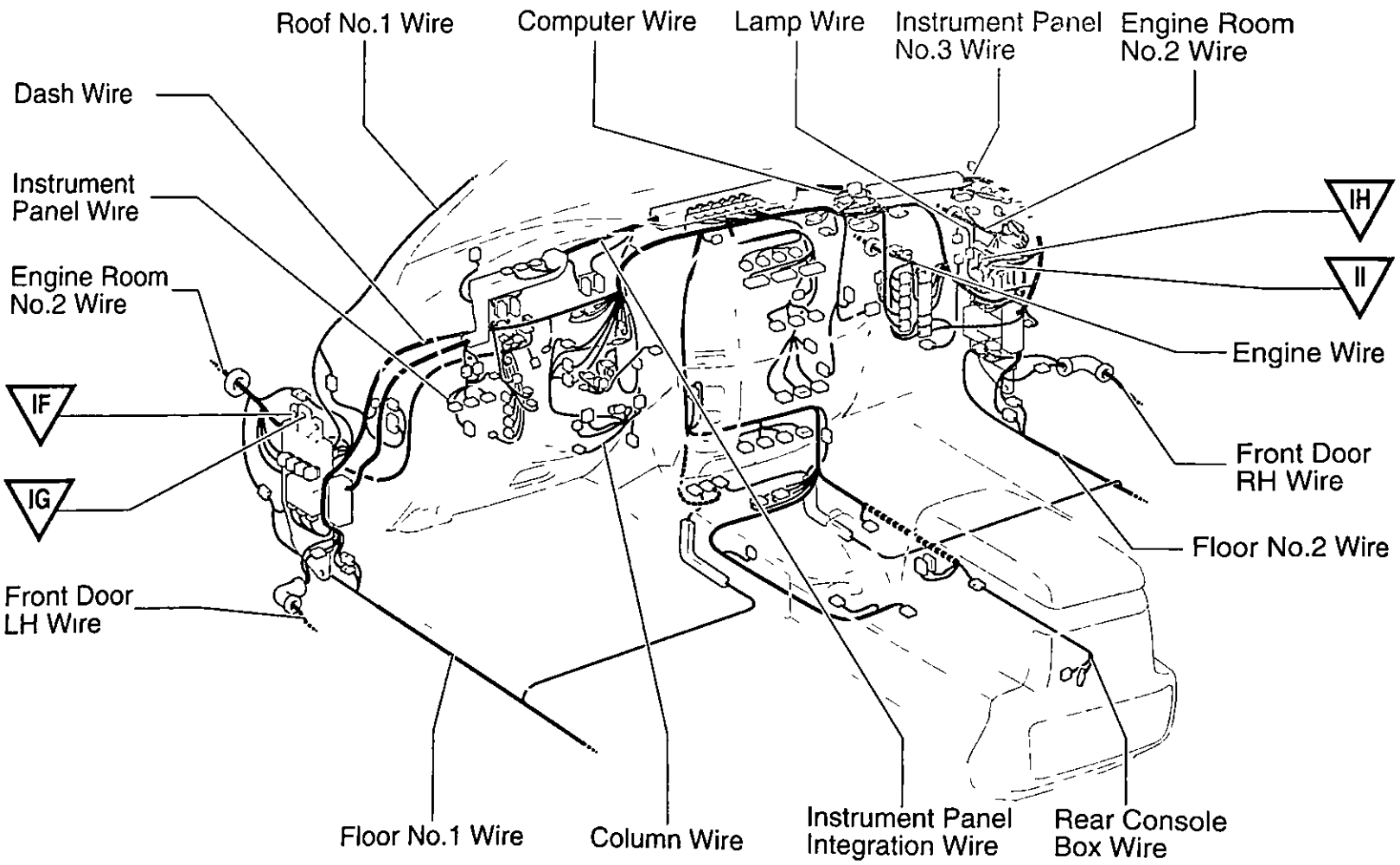

Connector Joining Wire Harness and Wire Harness

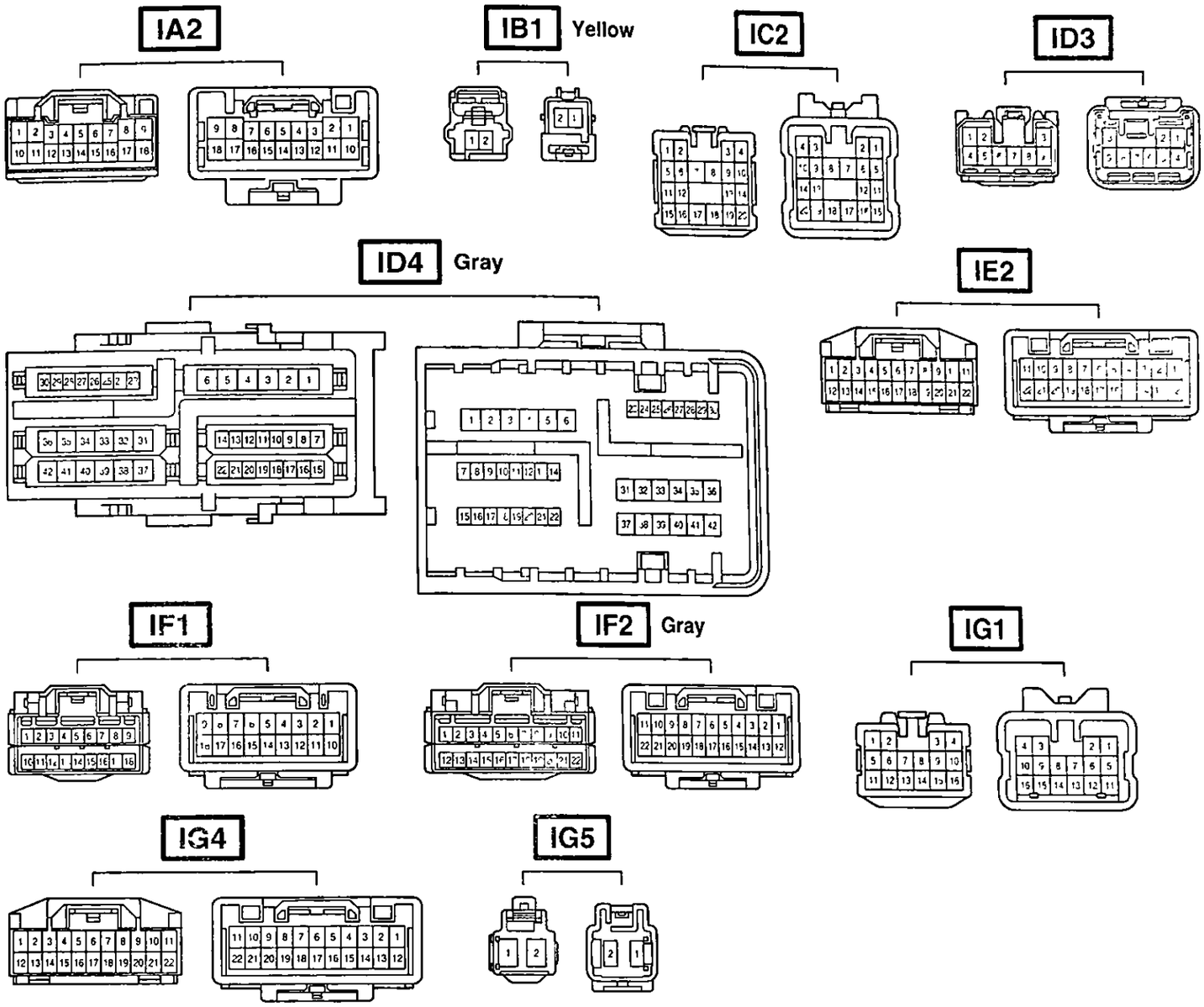

Code	Joining Wire Harness and Wire Harness (Connector Location)
IA2	Engine Room No.2 Wire and Floor No.1 Wire (Left Kick Panel)
IB1	Engine Room No 2 Wire and Dash Wire (Left Kick Panel)
IC2	Front Door LH Wire and Dash Wire (Left Kick Panel)
ID3	Dash Wire and Floor No.1 Wire (Left Kick Panel)
ID4	
IE2	Dash Wire and Roof No.1 Wire (Left Kick Panel)
IF1	Instrument Panel Integration Wire and Instrument Panel Wire (Left Side of Instrument Panel)
IF2	
IG1	Engine Room No.2 Wire and Dash Wire (Behind the Combination Meter)
IG4	
IG5	

▭ : Location of Connector Joining Wire Harness and Wire Harness

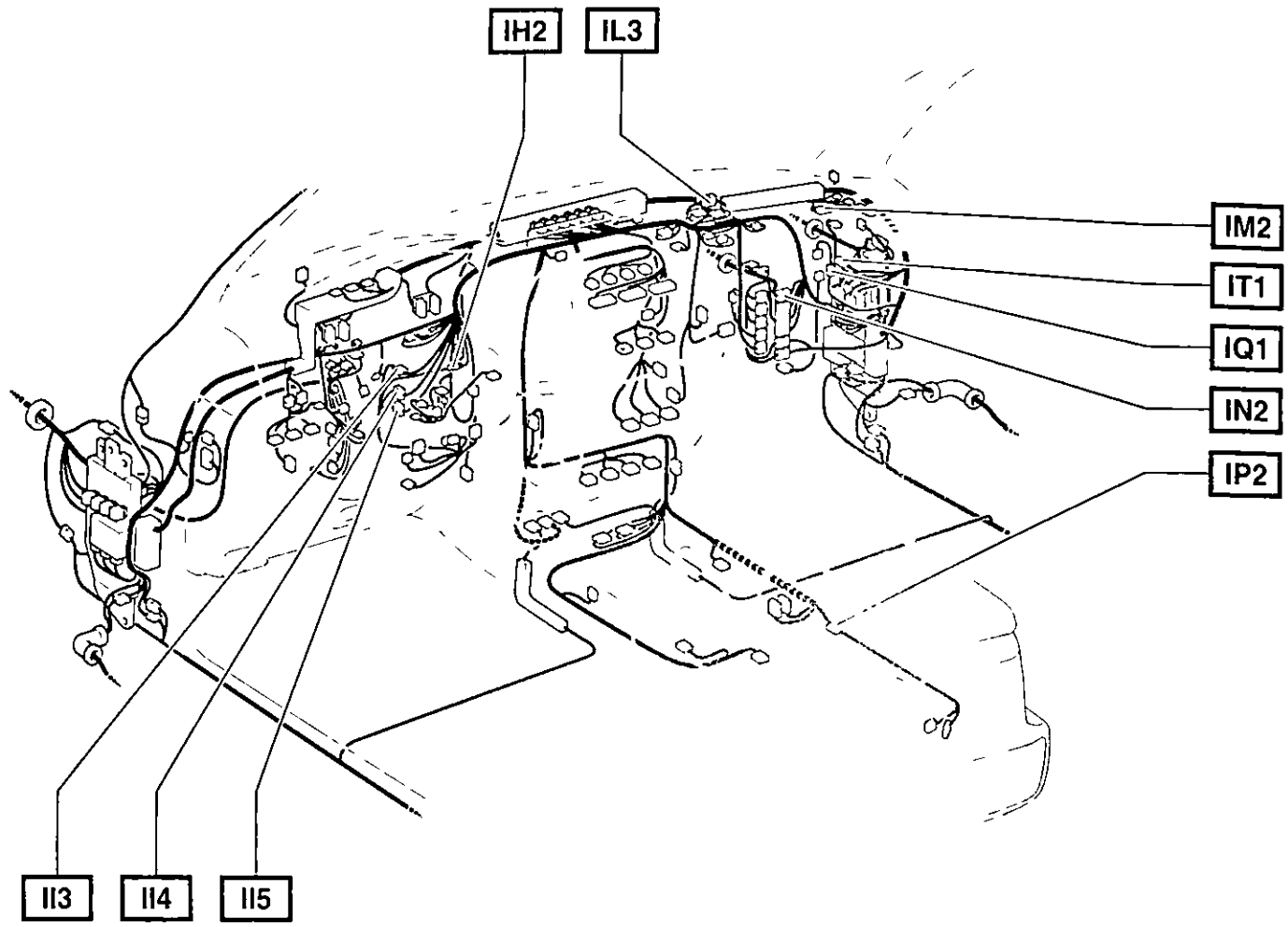

○ : Location of Splice Points

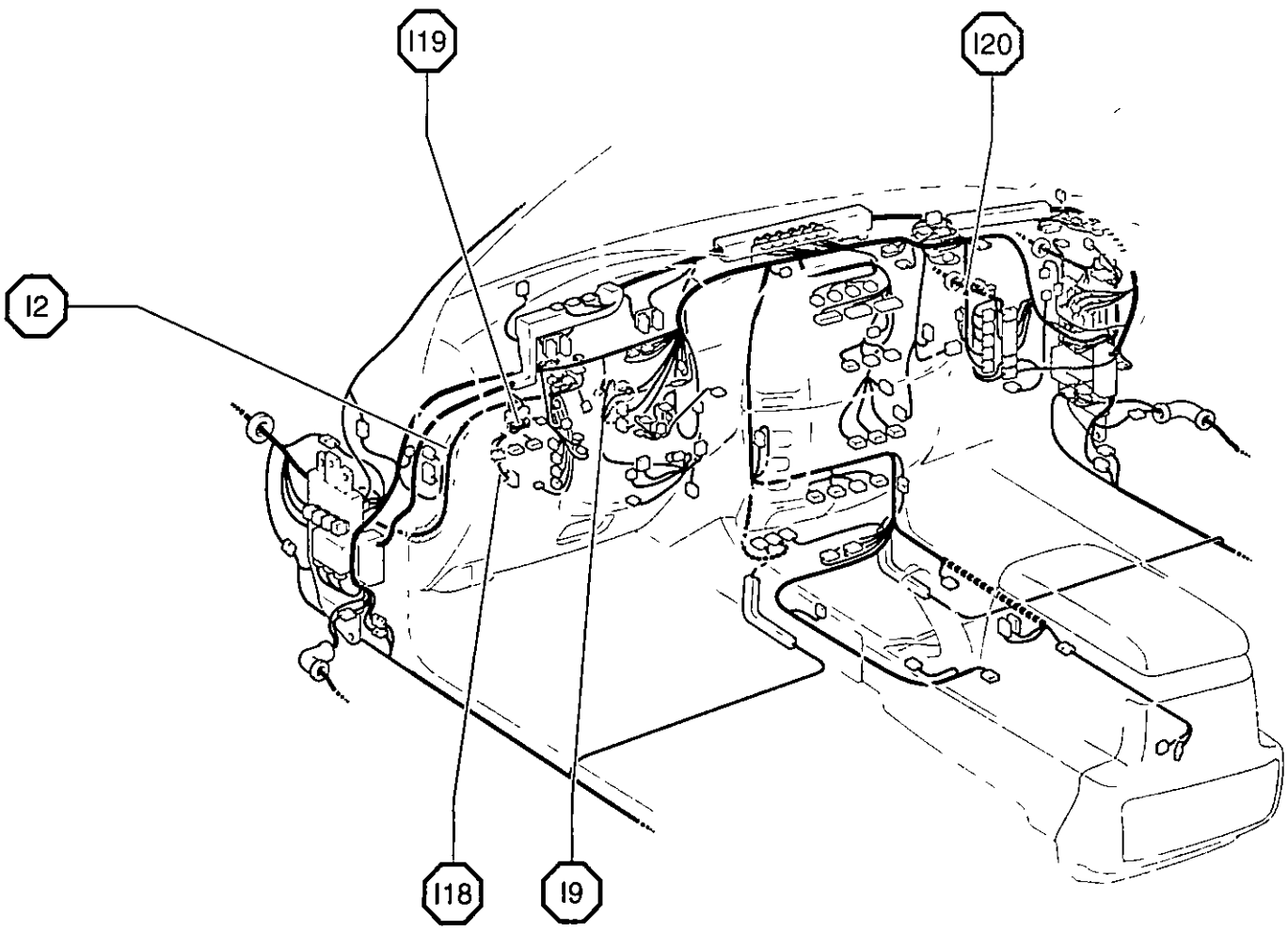

Connector Joining Wire Harness and Wire Harness

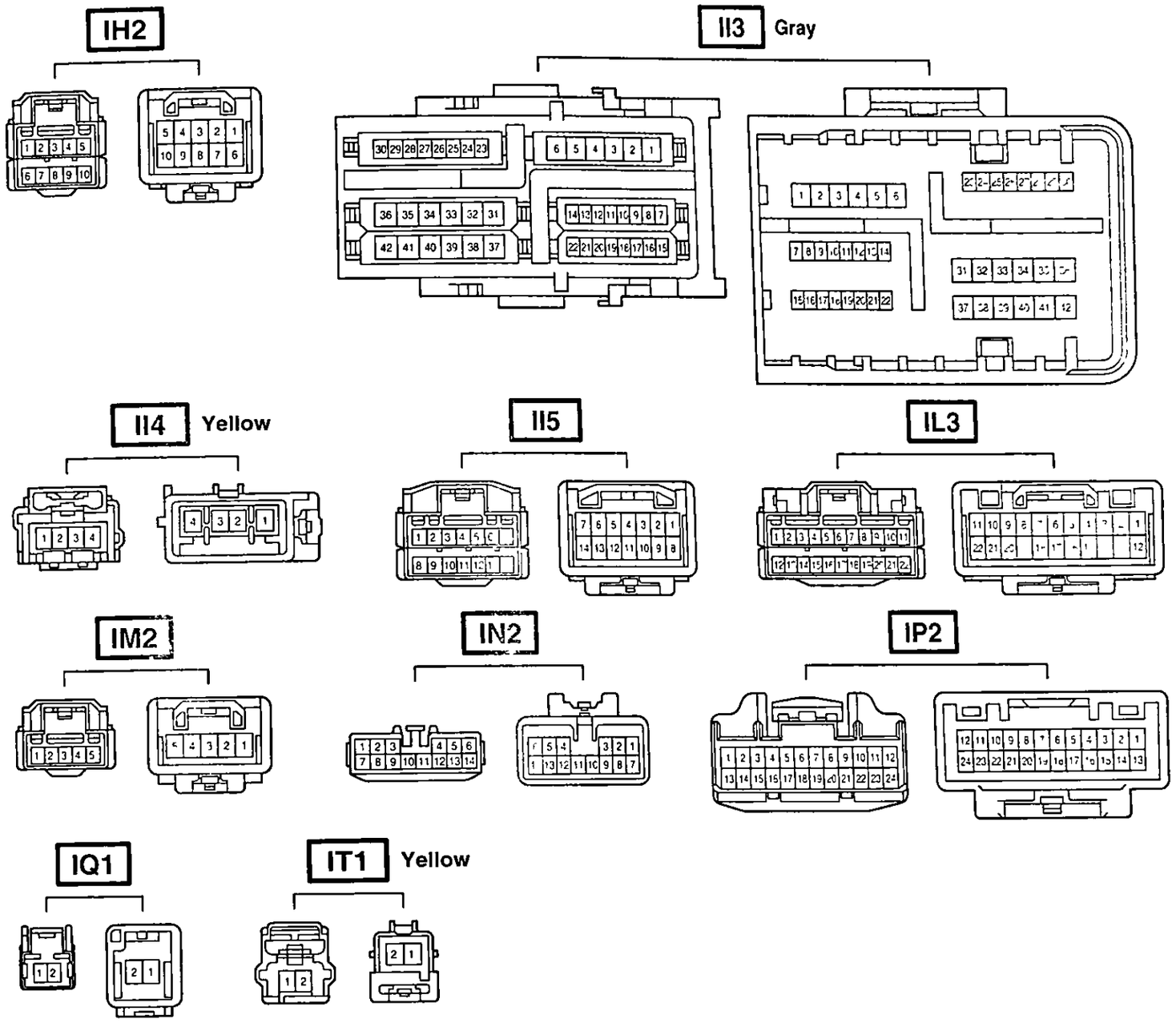

Code	Joining Wire Harness and Wire Harness (Connector Location)
IH2	Instrument Panel Integration Wire and Column Wire (Near the Ignition SW)
II3	Dash Wire and Column Wire (Near the Ignition SW)
II4	
II5	
IL3	Instrument Panel Integration Wire and Computer Wire (Instrument Panel Center)
IM2	Instrument Panel Integration Wire and Instrument Panel No 3 Wire (Right Side of Instrument Panel)
IN2	Engine Wire and Dash Wire (Behind the Glove Box)
IP2	Rear Console Box Wire and Dash Wire (Right Side of Rear Console)
IQ1	Instrument Panel Integration Wire and Lamp Wire (Behind the Glove Box)
IT1	Engine Room No.2 Wire and Dash Wire (Right Kick Panel)

▭ : Location of Connector Joining Wire Harness and Wire Harness

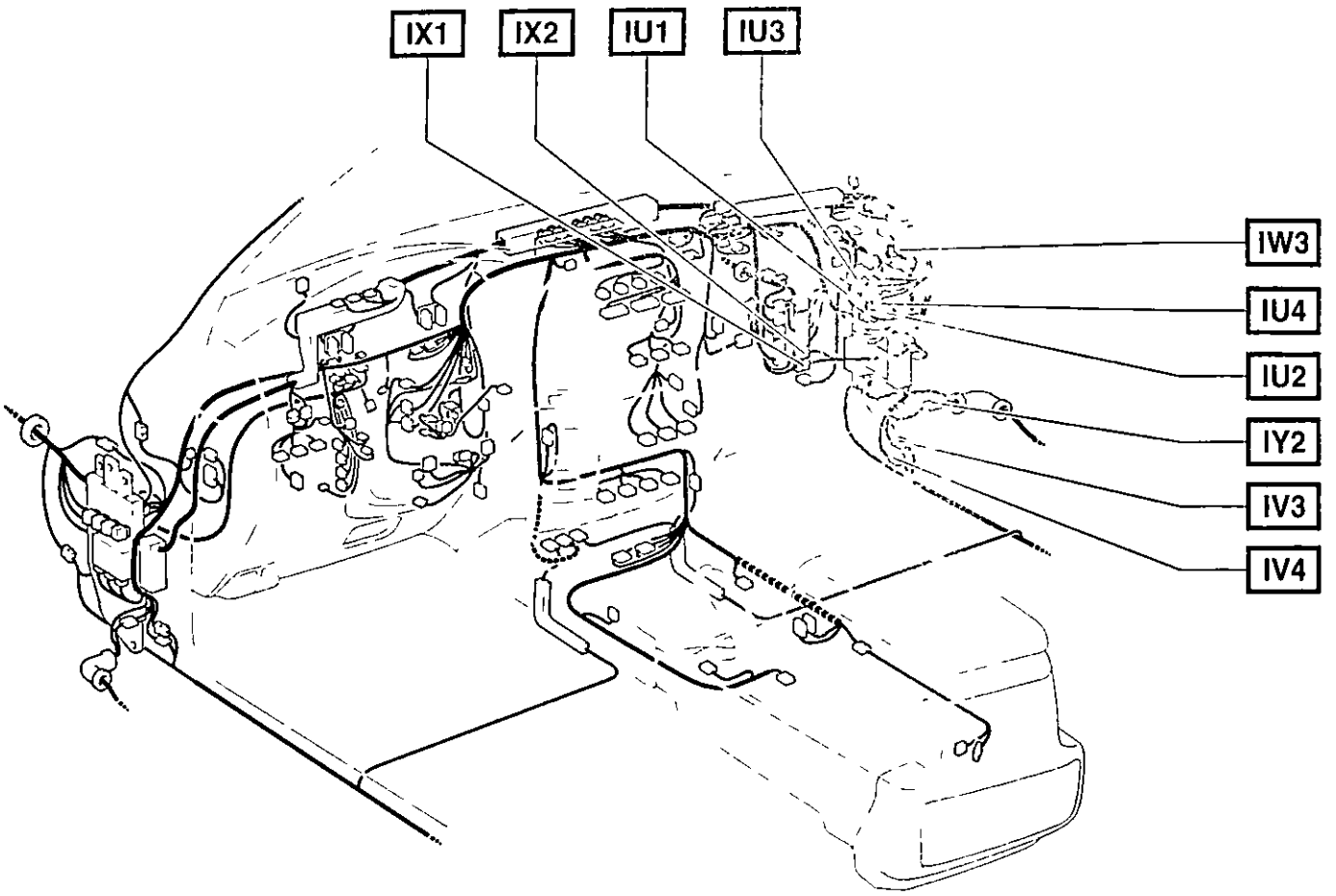

Connector Joining Wire Harness and Wire Harness

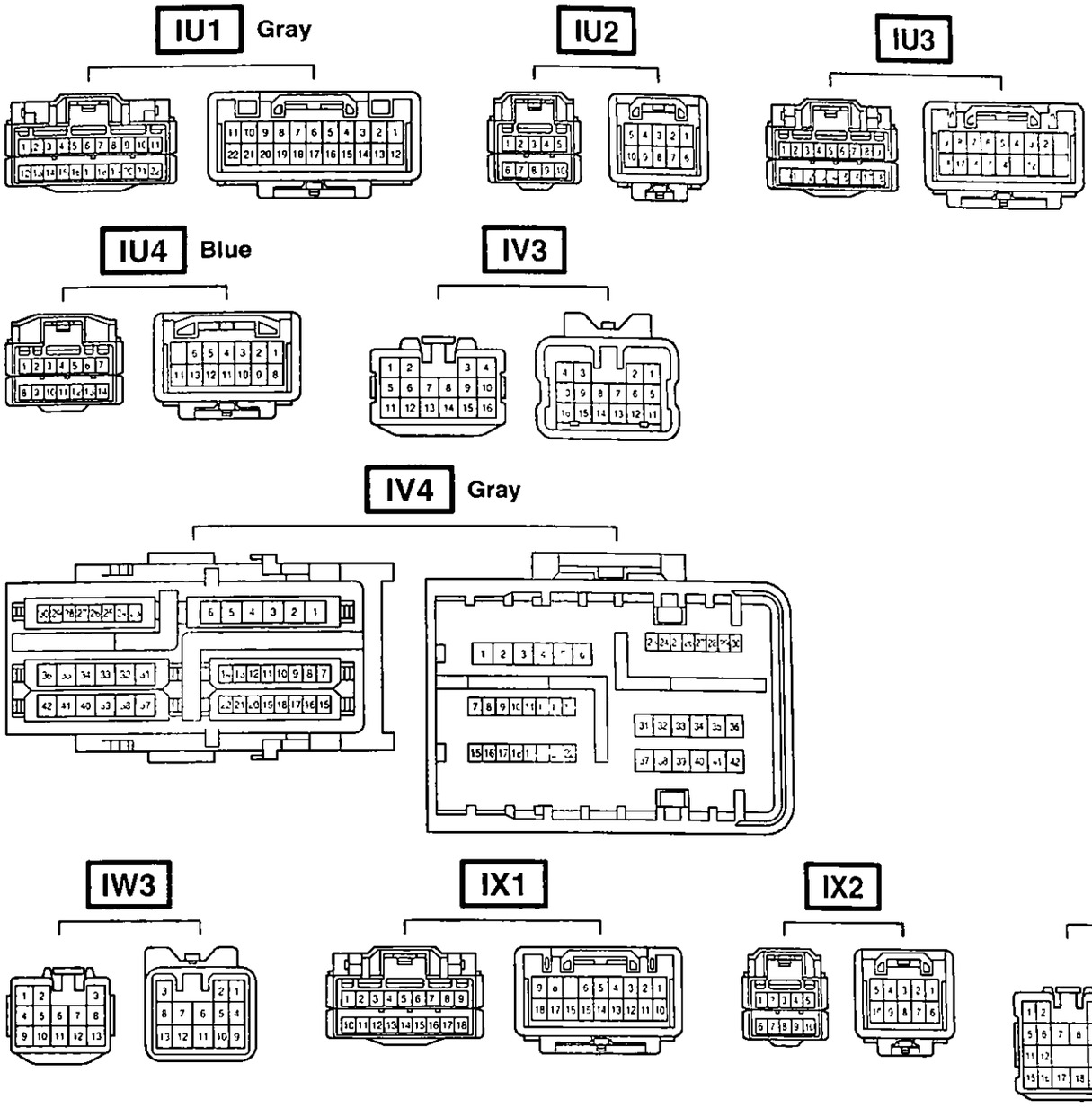

Code	Joining Wire Harness and Wire Harness (Connector Location)
IU1	Instrument Panel Integration Wire and Dash Wire (Behind the Glove Box)
IU2	
IU3	
IU4	
IV3	Dash Wire and Floor No.2 Wire (Right Kick Panel)
IV4	
IW3	Engine Room No 2 Wire and Dash Wire (Behind the Glove Box)
IX1	Instrument Panel Integration Wire and Engine Wire (Behind the Glove Box)
IX2	
IY2	Front Door RH Wire and Dash Wire (Right Kick Panel)

G ELECTRICAL WIRING ROUTING

□ : Location of Connector Joining Wire Harness and Wire Harness

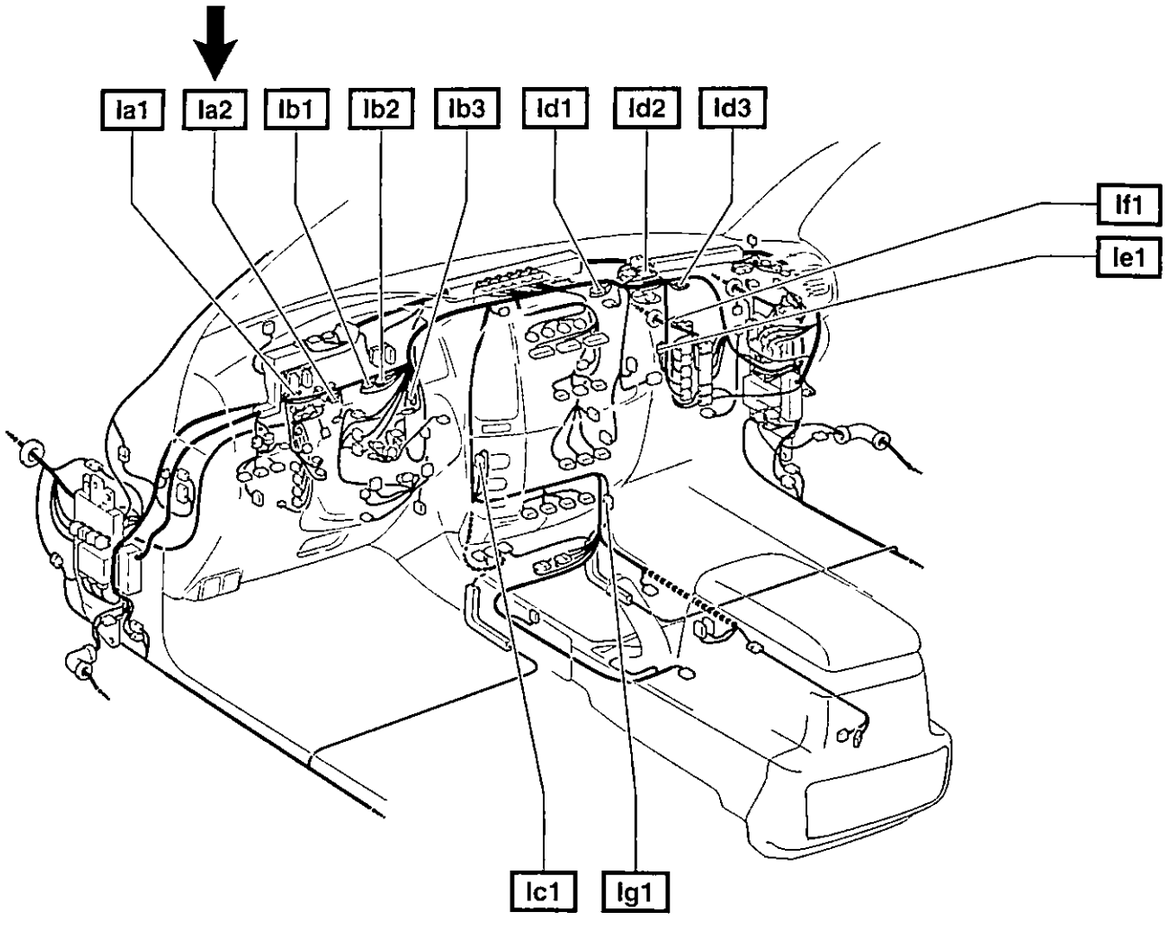

84

Connector Joining Wire Harness and Wire Harness

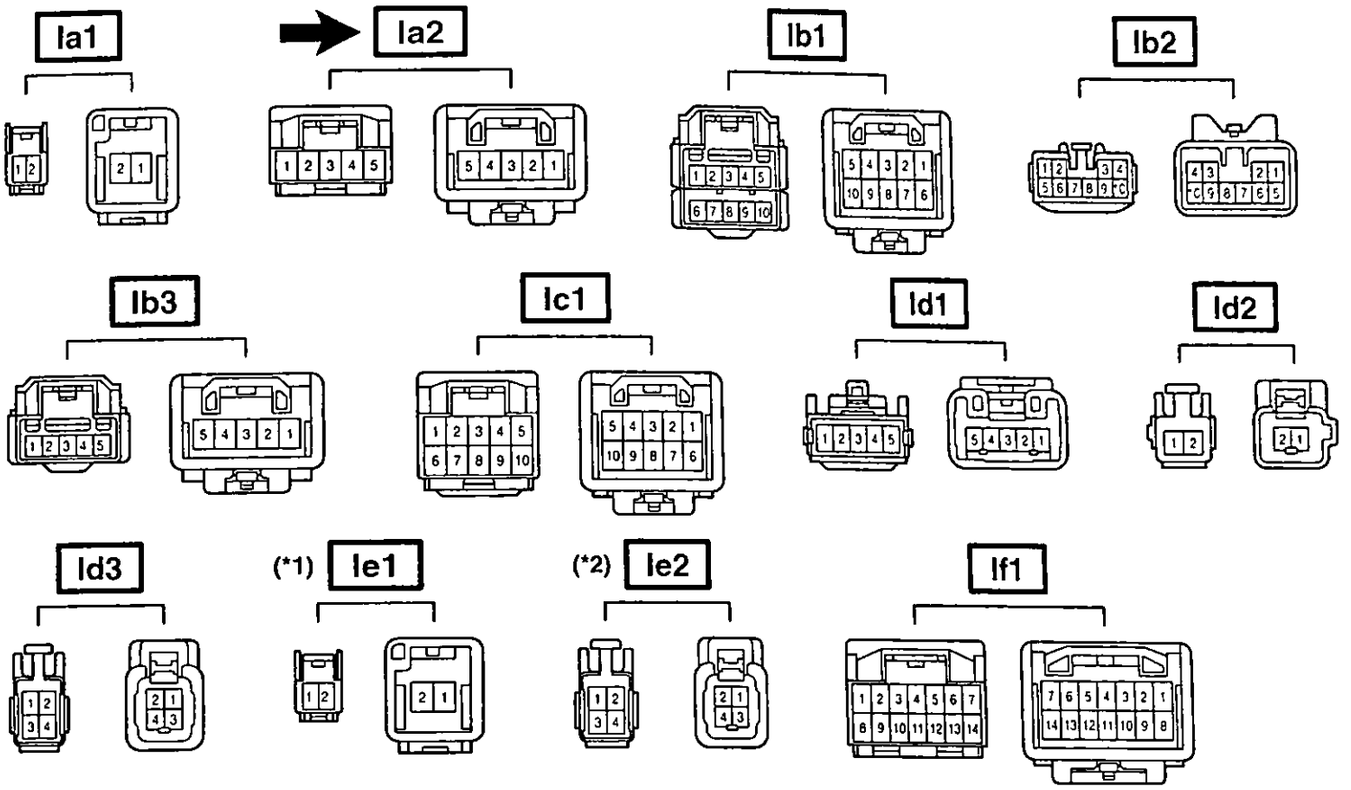

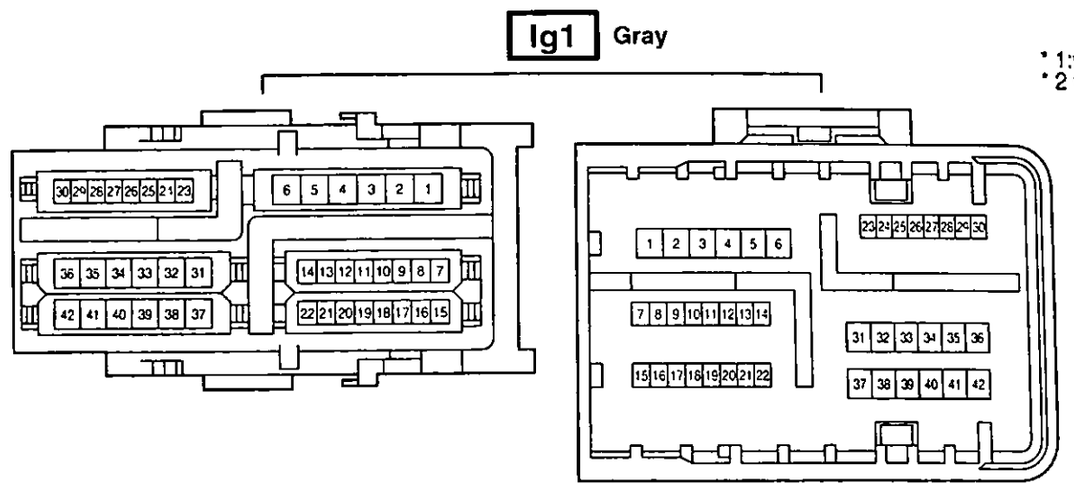

* 1:w/ Navigation System
* 2 w/o Navigation System

Code	Joining Wire Harness and Wire Harness (Connector Location)
Ia1	Dash Wire and Dash Wire (Behind the Combination Meter)
Ia2	
Ib1	Dash Wire and Dash Wire (Behind the Combination Meter)
Ib2	
Ib3	
Ic1	Dash Wire and Dash Wire (Behind the Center Panel)
Id1	Dash Wire and Dash Wire (Instrument Panel Center)
Id2	
Id3	
Ie1	Dash Wire and Dash Wire (Behind the Glove Box)
If1	Engine Wire and Engine Wire (Behind the Glove Box)
Ig1	Dash Wire and Floor No.2 Wire (Right Side of Front Console)

□ : Location of Connector Joining Wire Harness and Wire Harness

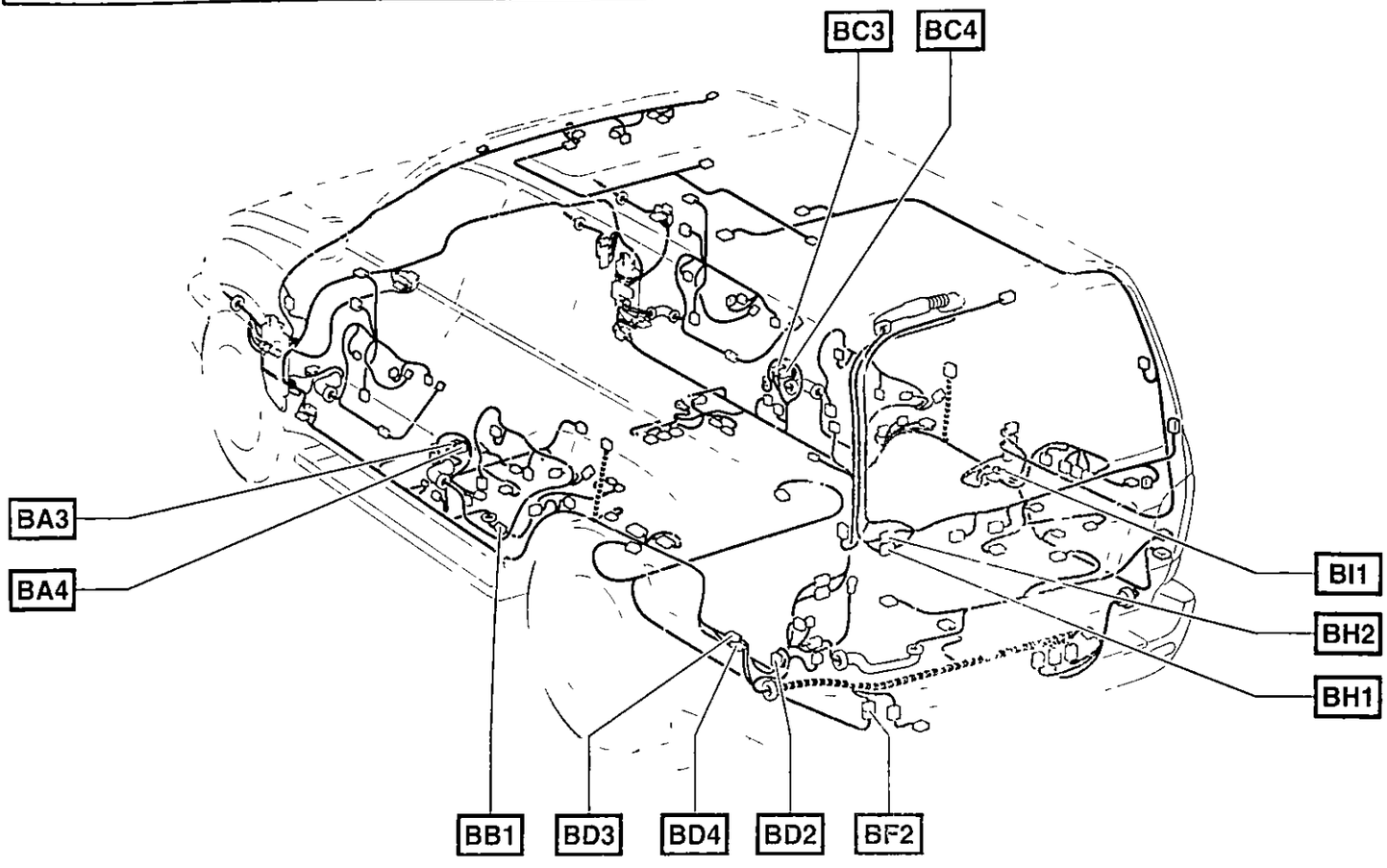

▽ : Location of Ground Points

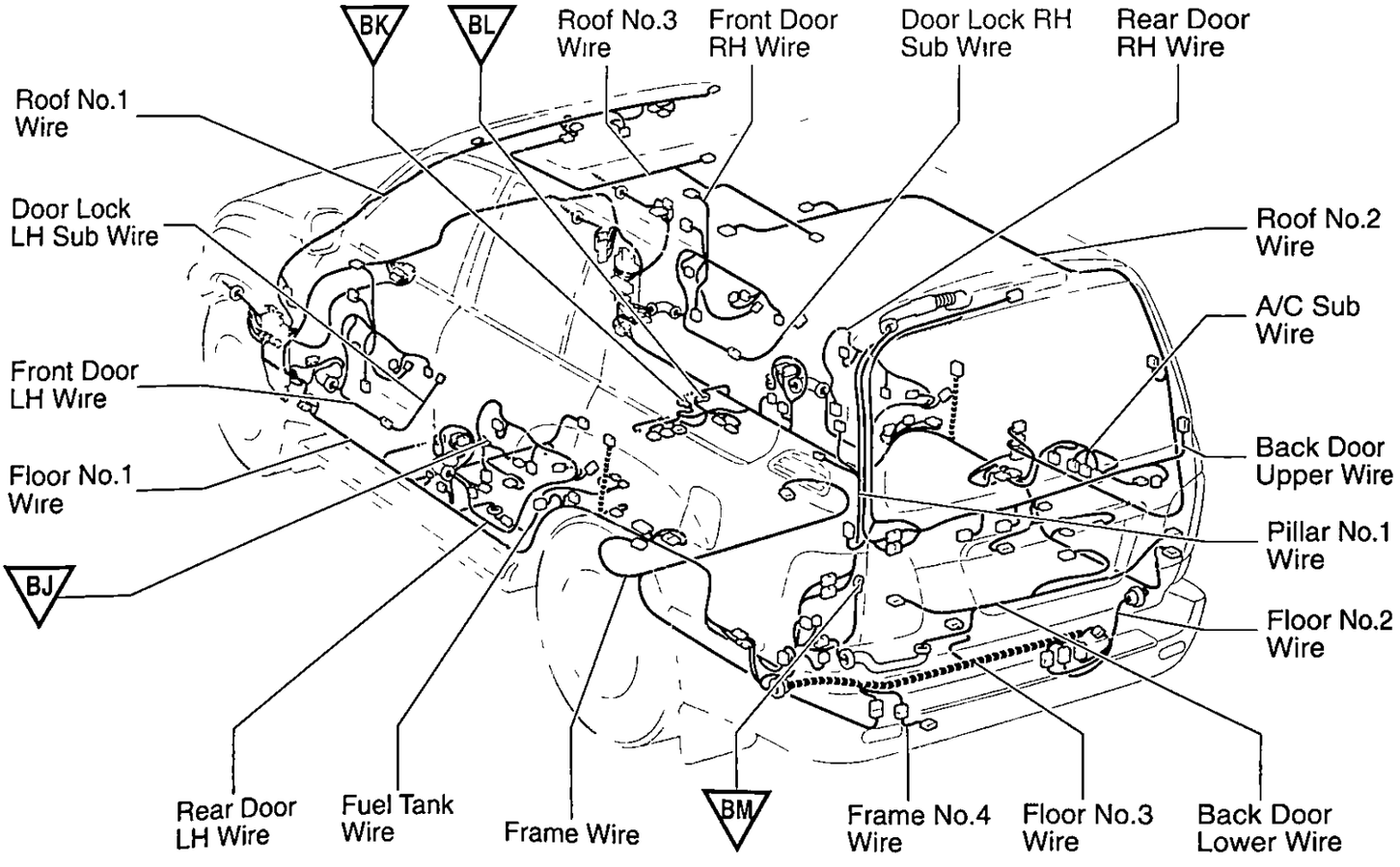

Connector Joining Wire Harness and Wire Harness

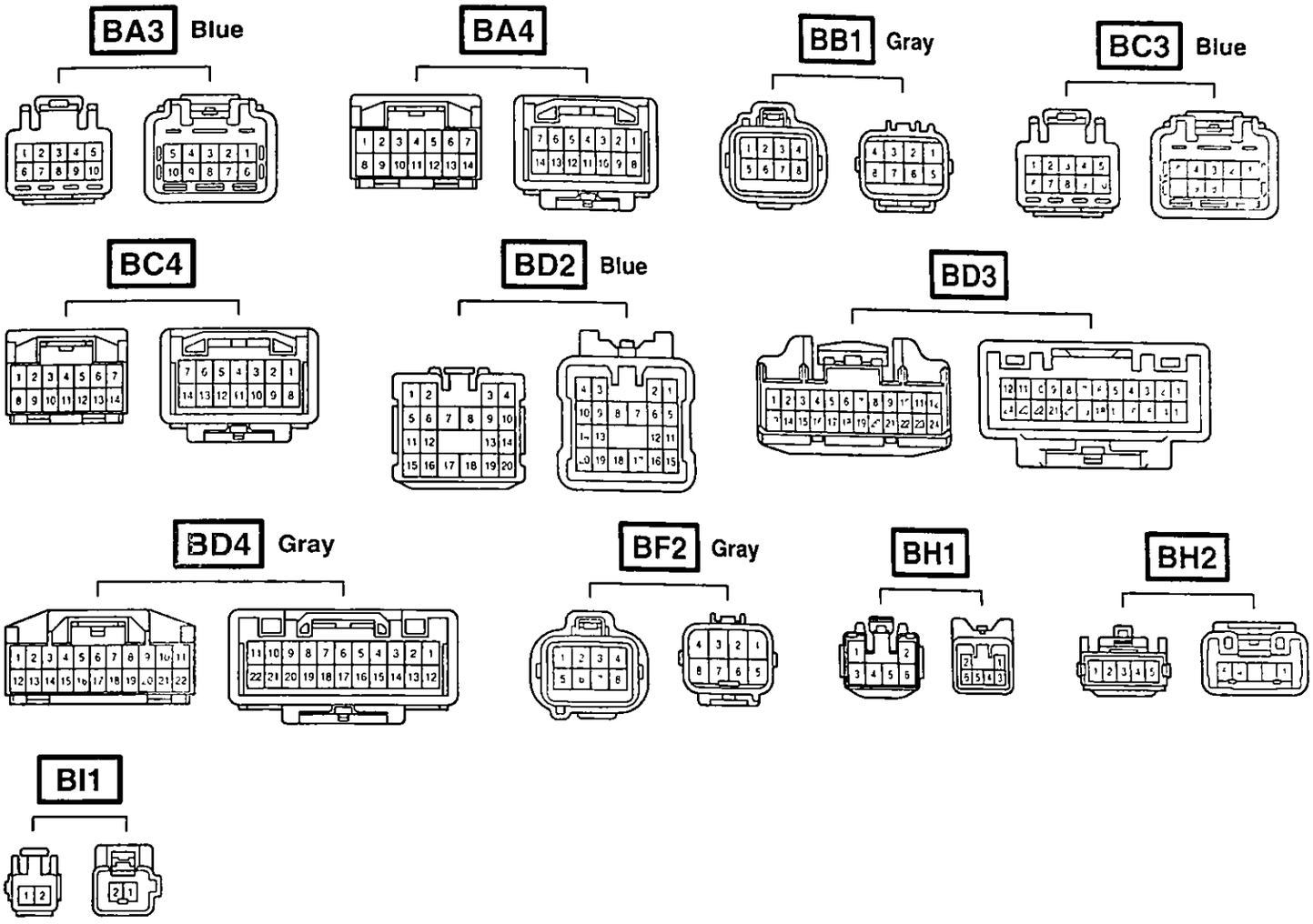

Code	Joining Wire Harness and Wire Harness (Connector Location)
BA3	Rear Door LH Wire and Floor No 1 Wire (Left Side of Center Pillar)
BA4	
BB1	Floor No 1 Wire and Fuel Tank Wire (Near the Fuel Tank)
BC3	Rear Door RH Wire and Floor No.2 Wire (Right Side of Center Pillar)
BC4	
BD2	Floor No.3 Wire and Floor No.1 Wire (Left Rear Side Quarter Panel)
BD3	
BD4	
BF2	Frame Wire and Floor No.3 Wire (Left Side of Rear Floor Crossmember)
BH1	Pillar No.1 Wire and Back Door Upper Wire (Left Side of Back Door)
BH2	
BI1	Roof No.2 Wire and Floor No.2 Wire (Right Side Rear Quarter Panel)

▭ : Location of Connector Joining Wire Harness and Wire Harness

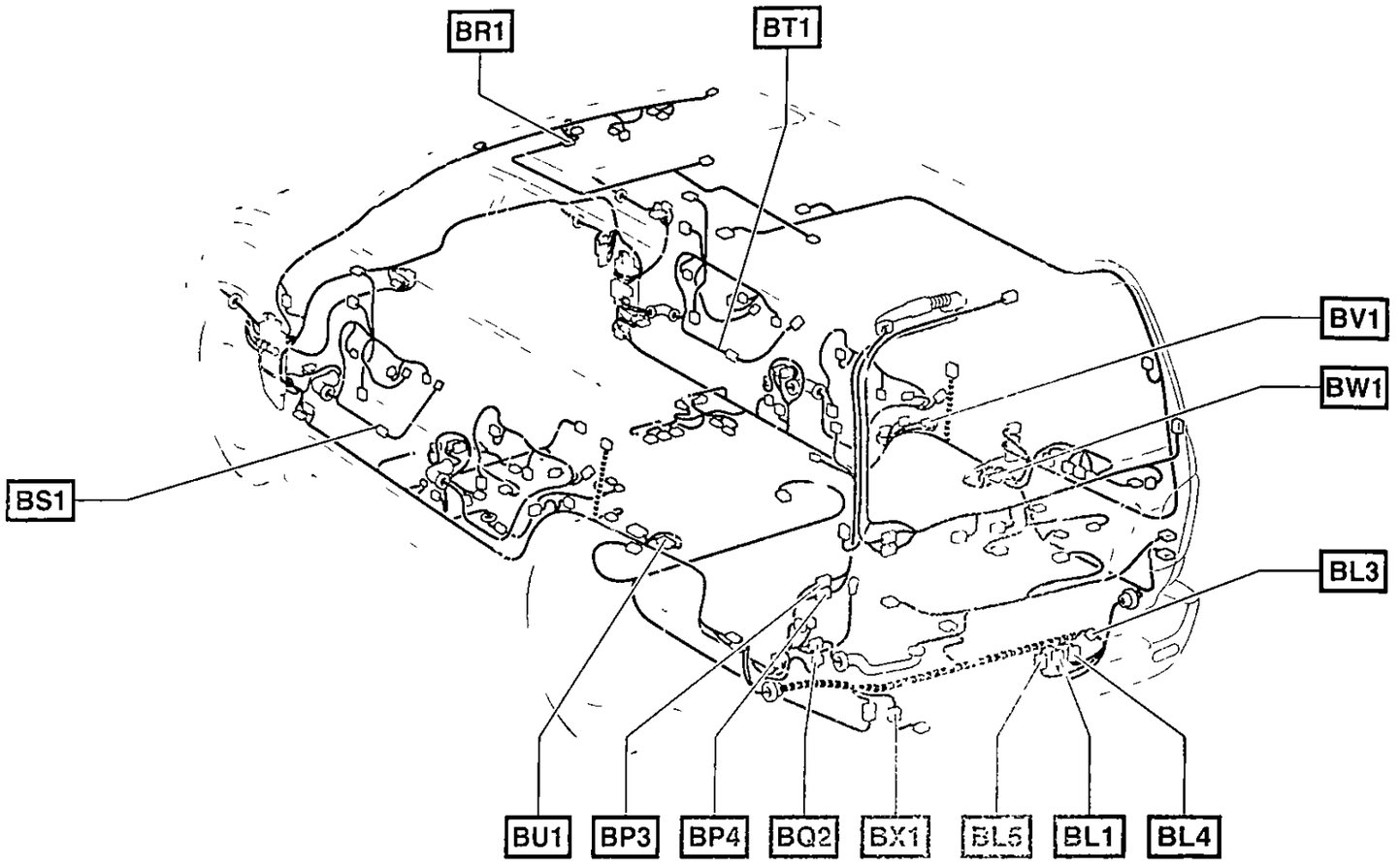

○ : Location of Splice Points

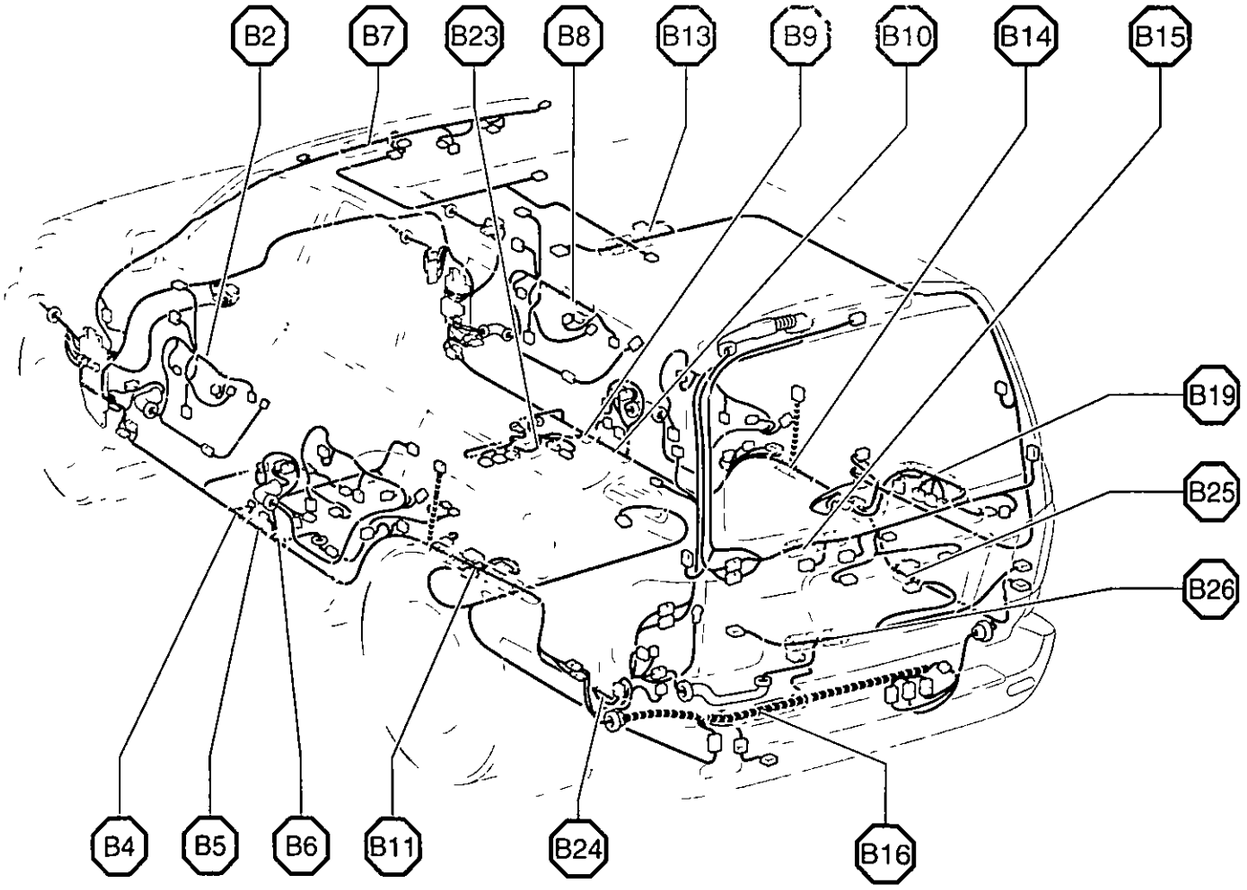

Connector Joining Wire Harness and Wire Harness

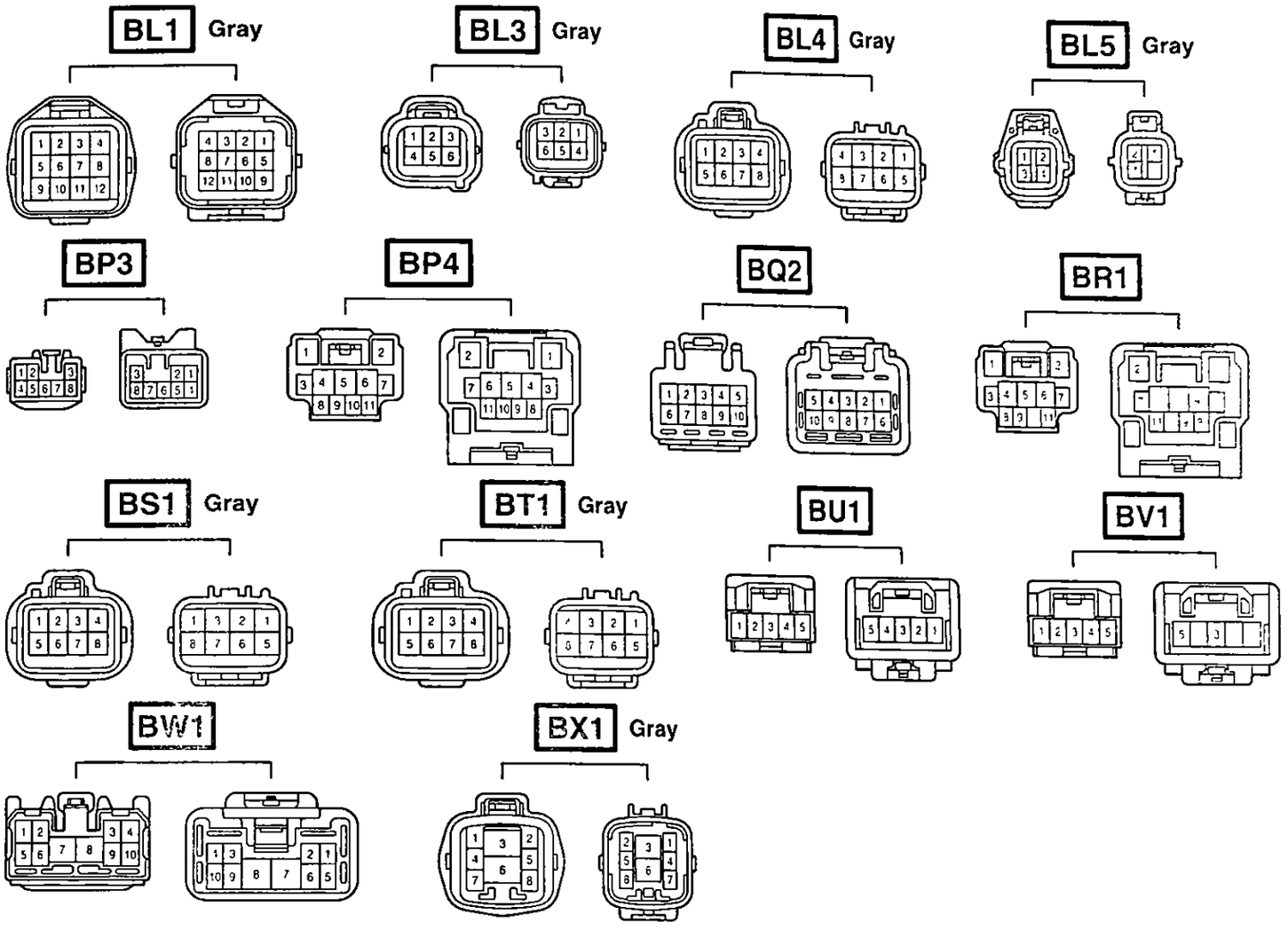

Code	Joining Wire Harness and Wire Harness (Connector Location)
BL1	Floor No 2 Wire and Floor No.3 Wire (Right Side of the Rear Floor Crossmember)
BL3	
BL4	
BL5	
BP3	Pillar No.1 Wire and Floor No.1 Wire (Left Rear Side Quarter Panel)
BP4	
BQ2	Back Door Lower Wire and Floor No.1 Wire (Left Rear Side Quarter Panel)
BR1	Roof No.3 Wire and Roof No.1 Wire (Front Side of Roof)
BS1	Door Lock LH Sub Wire and Front Door LH Wire (Front Door LH)
BT1	Door Lock RH Sub Wire and Front Door RH Wire (Front Door RH)
BU1	Floor No.1 Wire and Floor No 1 Wire (Near the Left Rear Suspension Support)
BV1	Floor No 2 Wire and Floor No.2 Wire (Near the Right Rear Suspension Support)
BW1	Floor No.2 Wire and A/C Sub Wire (Right Side Rear Quarter Panel)
BX1	Frame No 4 Wire and Floor No.3 Wire (Left Side of Rear Floor Crossmember)

□ : Location of Connector Joining Wire Harness and Wire Harness

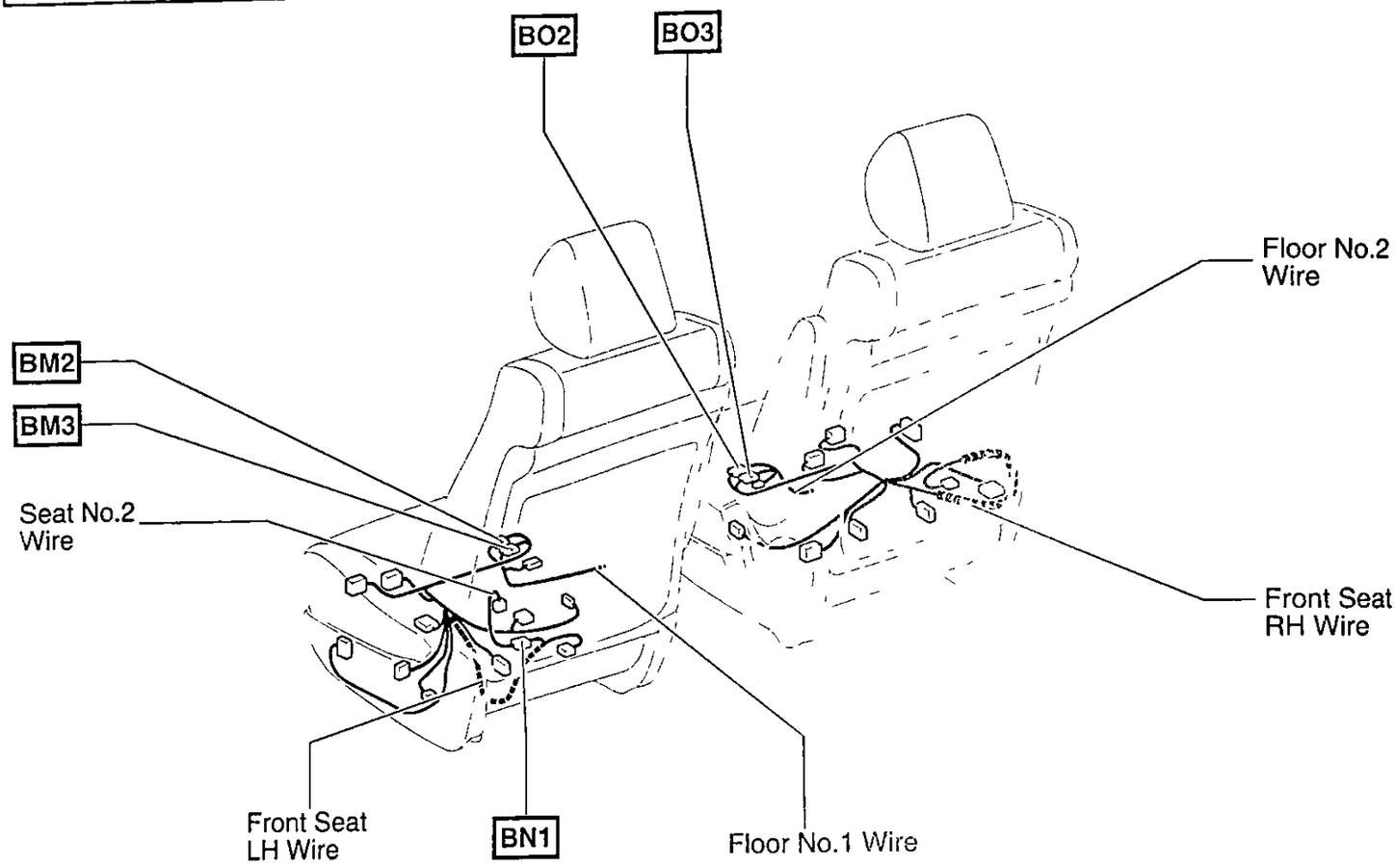

○ : Location of Splice Points

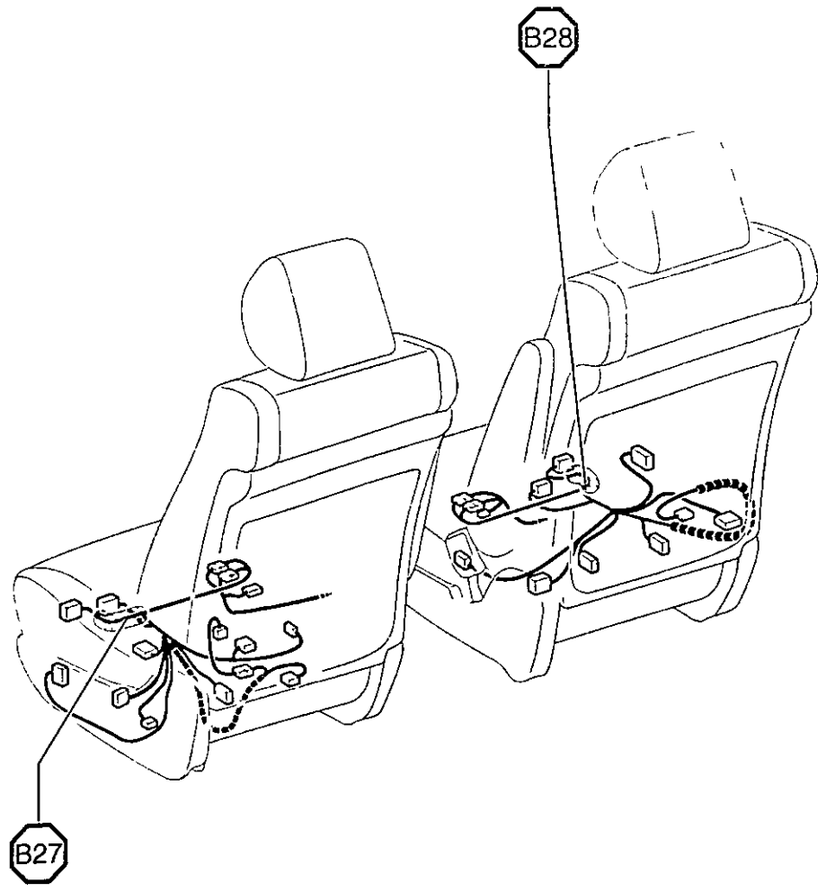

Connector Joining Wire Harness and Wire Harness

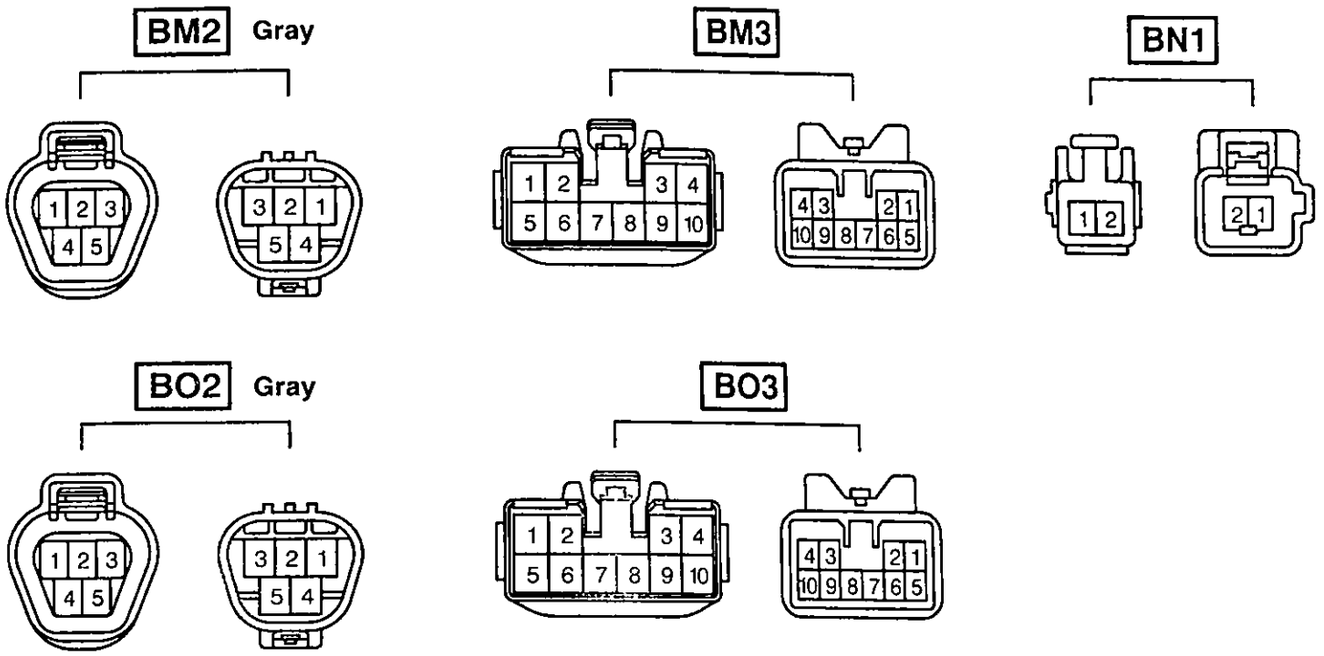

Code	Joining Wire Harness and Wire Harness (Connector Location)
BM2	Floor No 1 Wire and Front Seat LH Wire (Front Side Under the Driver's Seat)
BM3	
BN1	Seat No 2 Wire and Front Seat LH Wire (Rear Side Under the Driver's Seat)
BO2	Floor No 2 Wire and Front Seat RH Wire (Front Side Under the Front Passenger's Seat)
BO3	

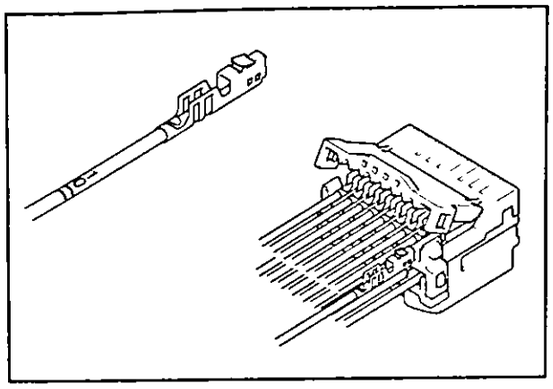

WIRE COLOR AND TERMINAL NUMBER

In some parts of the instrumental panel wiring harness, the same wire color (i.e. SB: Sky Blue) is used for all the wiring to a specific connector.
In order to identify the wiring, the terminal number is printed on the wiring.
Install the wiring to the connector position with the same terminal number.
Some early production Vehicles may not have these terminal numbers printed.

2003 LAND CRUISER ELECTRICAL WIRING DIAGRAM SYSTEM CIRCUITS

	Page
Air Conditioning (Front)	352
Air Conditioning (Rear)	362
Auto Antenna	322
Automatic Glare-Resistant EC Mirror with Compass	304
Automatic Light Control	164
Back-Up Light	162
Center Differential Lock	246
Charging	104
Cigarette Lighter	204
Combination Meter	346
Cruise Control	222
Door Lock Control	260
Electronically Controlled Transmission and A/T Indicator	212
Engine Control	108
Engine Immobiliser System	124
Front Fog Light	132
Front Wiper and Washer	196
Garage Door Opener	210
Headlight	128
Horn	208
Ignition	100
Illumination	142
Interior Light	148
Key Reminder	316
Light Auto Turn Off	166
Mirror Heater	314
Moon Roof	256
Multi-Display (w/o Navigation System)	344
Multiplex Communication System	172
Multiplex Communication System (Communication Bus)	168
Navigation System	336
Power Outlet	206
Power Rear Quarter Window	306
Power Seat	294
Power Source	94
Power Tilt and Power Telescopic	298
Power Window	250
Radio and Player (w/ Navigation System)	324
Radio and Player (w/o Navigation System)	330
Rear Window Defogger	312
Rear Wiper and Washer	200
Remote Control Mirror	302
Seat Belt Warning	320
Seat Heater	308
Shift Lock	244
SRS	237
Starting	98
Stop Light	156
Taillight	138
Theft Deterrent	282
Trailer Towing	158
Turn Signal and Hazard Warning Light	134
VSC	228
Wireless Door Lock Control	270

Power Source

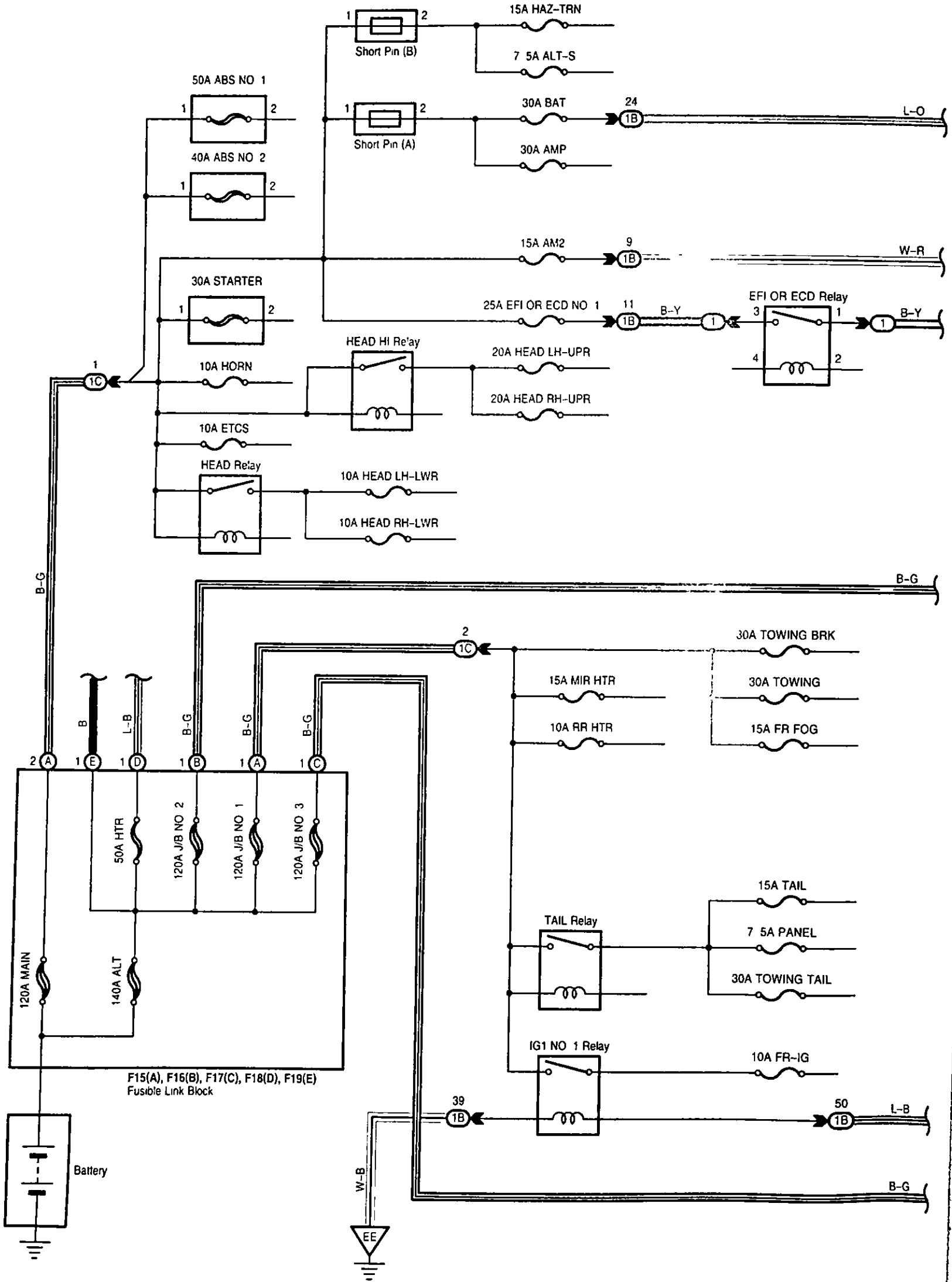

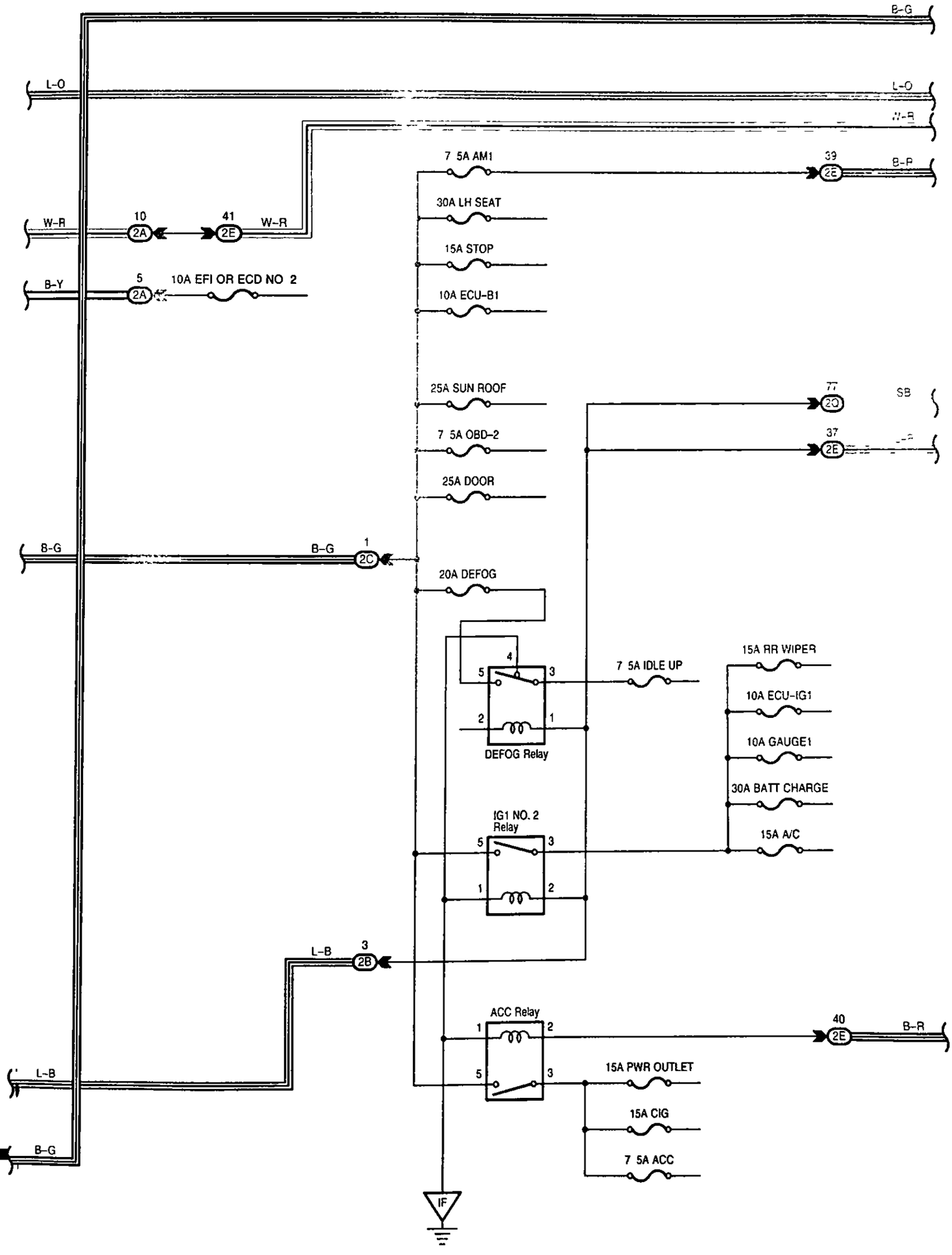
B-G
L-O
L-O
W-R
7 5A AM1
39
2E
B-R
30A LH SEAT
W-R
10
2A
41
2E
W-R
15A STOP
B-Y
5
2A
10A EFI OR ECD NO 2
10A ECU-B1
25A SUN ROOF
77
2O
SB
7 5A OBD-2
37
2E
25A DOOR
B-G
B-G
1
2C
20A DEFOG
4
5
3
7 5A IDLE UP
15A RR WIPER
2
1
10A ECU-IG1
DEFOG Relay
10A GAUGE1
30A BATT CHARGE
IG1 NO. 2
Relay
5
3
15A A/C
1
2
L-B
3
2B
ACC Relay
1
2
40
2E
B-R
L-B
5
3
15A PWR OUTLET
15A CIG
B-G
7 5A ACC
IF

Power Source

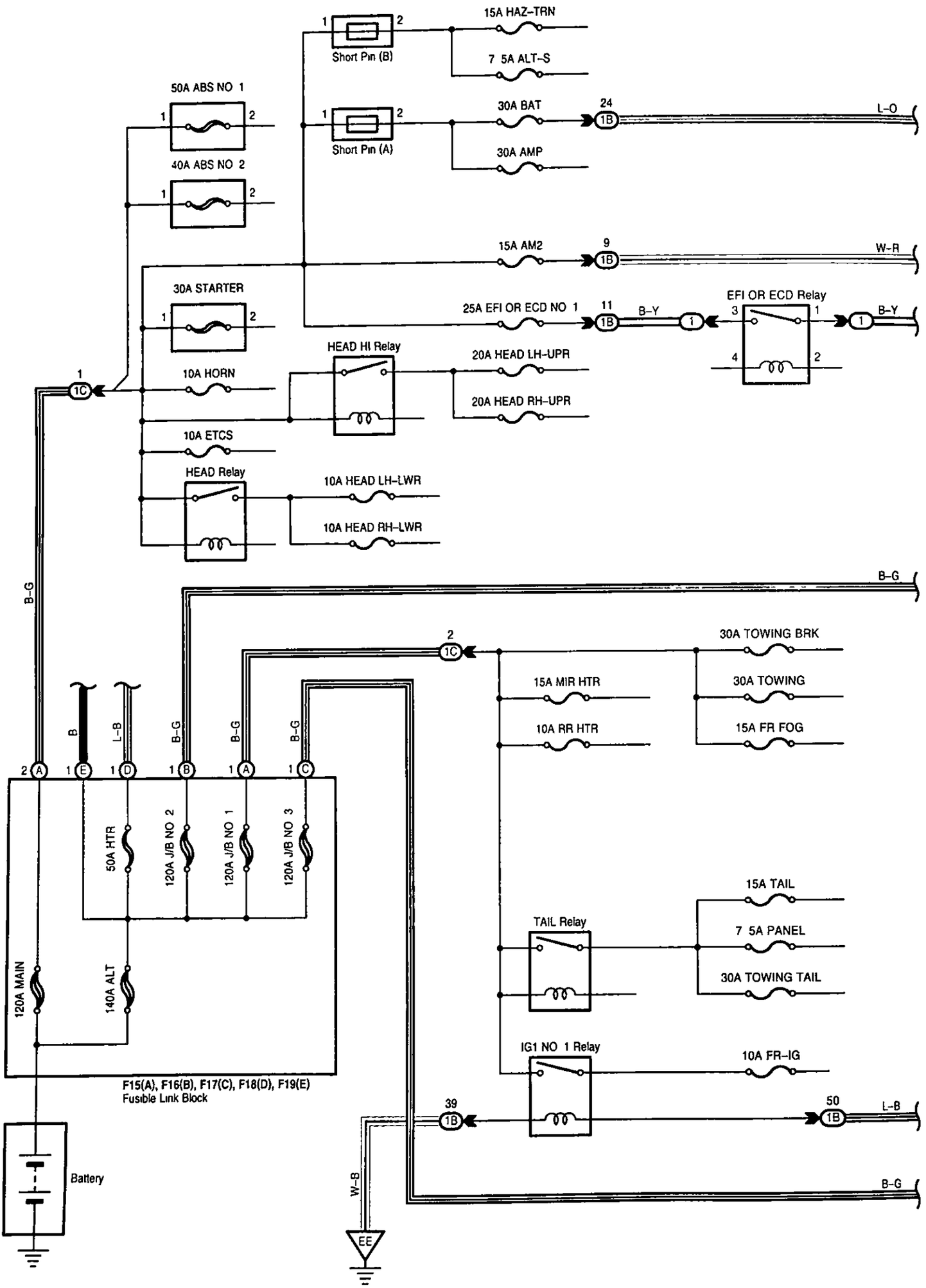

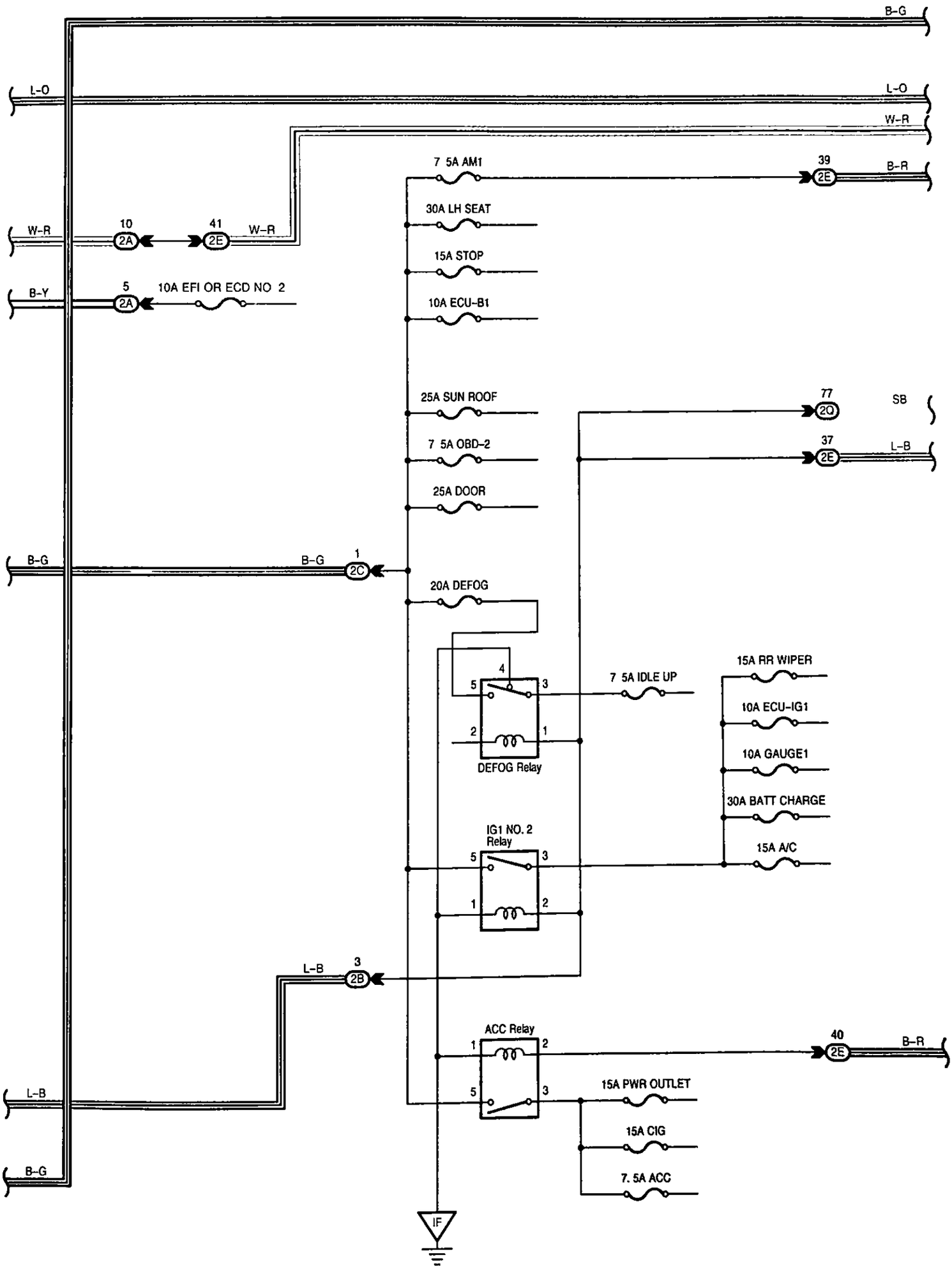
B-G
L-O
L-O
W-R
7 5A AM1
39
2E
B-R
30A LH SEAT
W-R
10
2A
41
2E
W-R
15A STOP
B-Y
5
2A
10A EFI OR ECD NO 2
10A ECU-B1
25A SUN ROOF
77
2Q
SB
7 5A OBD-2
37
2E
L-B
25A DOOR
B-G
B-G
1
2C
20A DEFOG
4
5
3
7 5A IDLE UP
15A RR WIPER
2
1
10A ECU-IG1
DEFOG Relay
10A GAUGE1
30A BATT CHARGE
IG1 NO. 2
Relay
15A A/C
5
3
1
2
L-B
3
2B
ACC Relay
1
2
40
2E
B-R
L-B
5
3
15A PWR OUTLET
15A CIG
B-G
7. 5A ACC
IF

Power Source

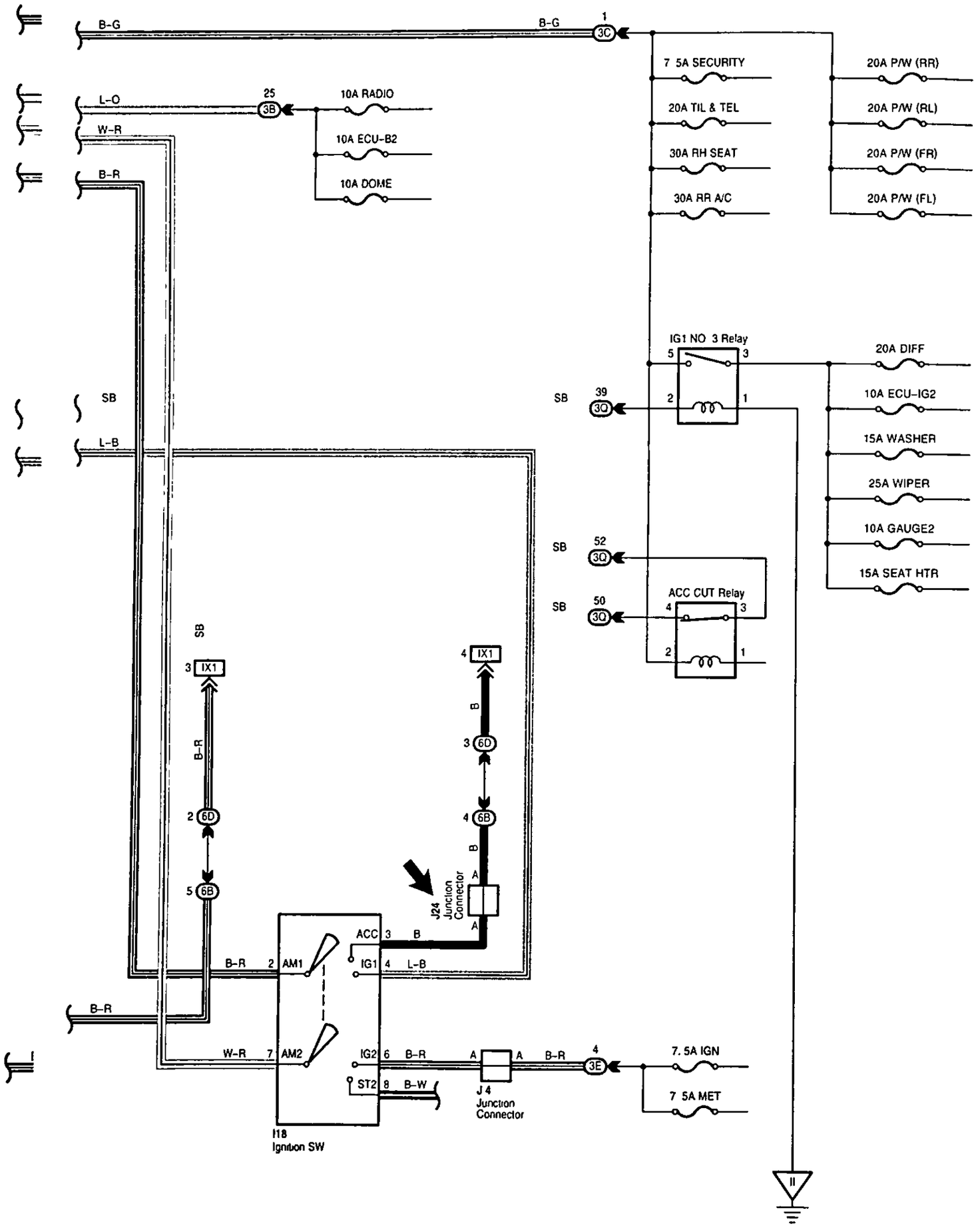

Correction to Pub.No. EWD510U(Bulletin No. OB-2195)

Service Hints

I18 Ignition SW

2–3 : Closed with ignition SW at ACC or ON position
2–4 : Closed with ignition SW at ON or ST position
7–6 : Closed with ignition SW at ON or ST position
7–8 : Closed with ignition SW at ST position

○ : Parts Location

Code		See Page	Code		See Page	Code	See Page
F15	A	68	F18	D	68	J4	71
F16	B	68	F19	E	68	J24	71
F17	C	68	I18		70		

▢ : Relay Blocks

Code	See Page	Relay Blocks (Relay Block Location)
1	22	Engine Room R/B (Engine Compartment Left)

▢ : Junction Block and Wire Harness Connector

Code	See Page	Junction Block and Wire Harness (Connector Location)
1B	24	Engine Room No 2 Wire and Engine Room J/B (Engine Compartment Left)
1C		
2A	28	Engine Room No 2 Wire and Cowl Side J/B LH (Left Kick Panel)
2B		
2C		
2E	28	Dash Wire and Cowl Side J/B LH (Left Kick Panel)
2Q	30	Instrument Panel Integration Wire and Cowl Side J/B LH (Left Kick Panel)
3B	40	Engine Room No 2 Wire and Cowl Side J/B RH (Right Kick Panel)
3C		
3E	40	Dash Wire and Cowl Side J/B RH (Right Kick Panel)
3Q	42	Instrument Panel Integration Wire and Cowl Side J/B RH (Right Kick Panel)
6B	60	Dash Wire and J/B No 6 (Behind the Grove Box)
6D	60	Engine Wire and J/B No 6 (Behind the Grove Box)

▢ : Connector Joining Wire Harness and Wire Harness

Code	See Page	Joining Wire Harness and Wire Harness (Connector Location)
IX1	82	Instrument Panel Integration Wire and Engine Wire (Behind the Glove Box)

▽ : Ground Points

Code	See Page	Ground Points Location
EE	76	Front Left Side of Fender Apron
IF	78	Set Bolt of Cowl Side J/B LH
II	78	Set Bolt of Cowl Side J/B RH

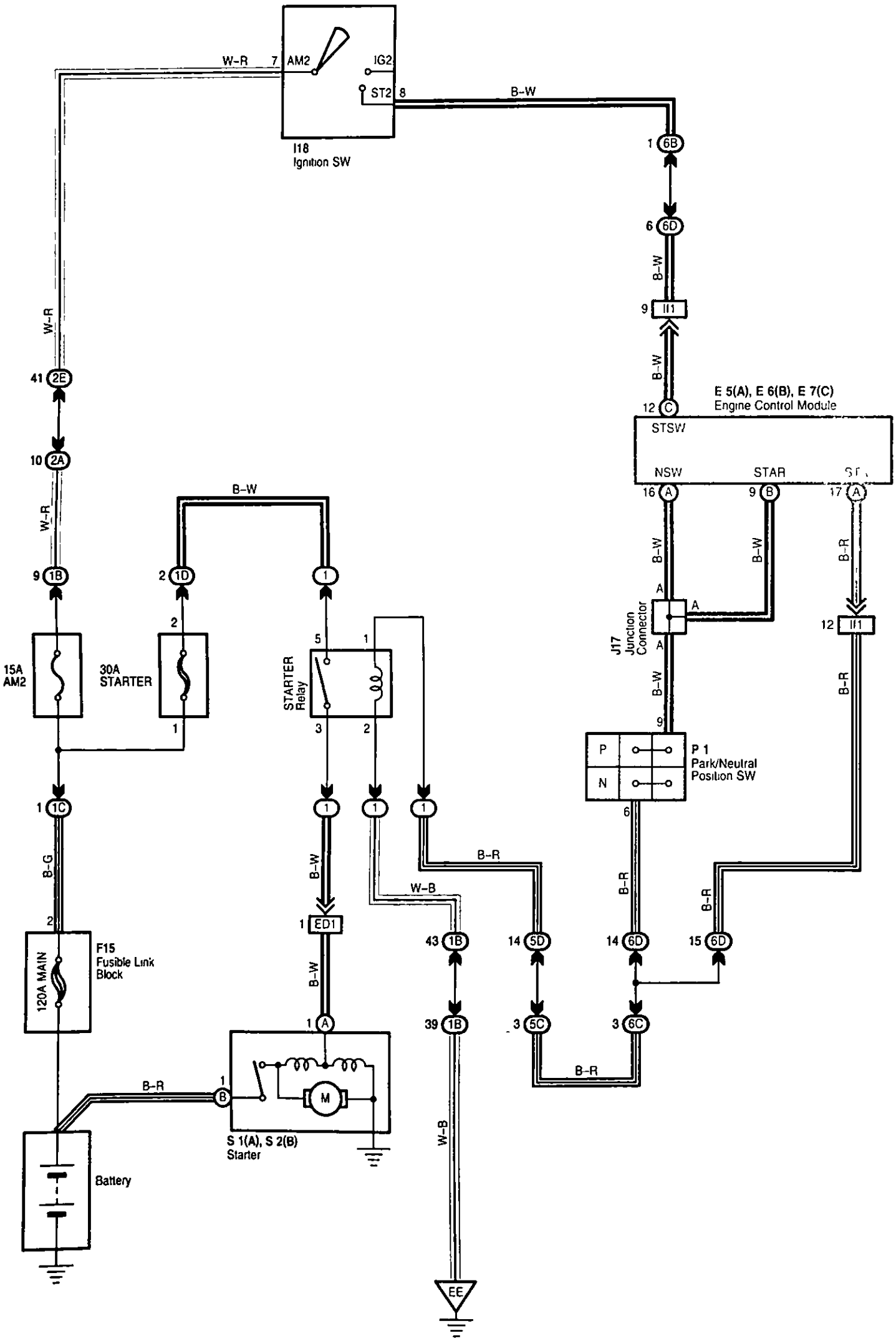
W-R
7
AM2
IG2
ST2
8
B-W
I18
Ignition SW
1
6B
6
6D
B-W
9
II1
B-W
W-R
41
2E
12
C
E 5(A), E 6(B), E 7(C)
Engine Control Module
STSW
NSW
STAR
ST
16
A
9
B
17
A
10
2A
W-R
B-W
B-W
B-R
9
1B
2
1D
1
A
A
J17
Junction
Connector
12
II1
2
2
5
1
B-R
15A
AM2
30A
STARTER
1
STARTER
Relay
3
2
B-W
9
P
N
P 1
Park/Neutral
Position SW
1
1C
1
1
1
6
B-G
B-W
B-R
B-R
W-B
B-R
B-R
2
1
ED1
43
1B
14
5D
14
6D
15
6D
F15
Fusible Link
Block
120A MAIN
B-W
1
A
39
1B
3
5C
3
6C
B-R
1
B
M
S 1(A), S 2(B)
Starter
W-B
Battery
EE

Service Hints

I18 Ignition SW

7-8 : Closed with ignition SW at ST position

P1 Park/Neutral Position SW

6-9 : Closed with A/T shift lever in P or N position

S1 (A), S2 (B) Starter

Points closed with Park/Neutral position SW at P or N position and ignition SW at ST position

○ : Parts Location

Code		See Page	Code	See Page	Code		See Page
E5	A	70	F15	68	P1		69
E6	B	70	I18	70	S1	A	69
E7	C	70	J17	71	S2	B	69

⬭ : Relay Blocks

Code	See Page	Relay Blocks (Relay Block Location)
1	22	Engine Room R/B (Engine Compartment Left)

⬭ : Junction Block and Wire Harness Connector

Code	See Page	Junction Block and Wire Harness (Connector Location)
1B	24	Engine Room No 2 Wire and Engine Room J/B (Engine Compartment Left)
1C		
1D		
2A	28	Engine Room No 2 Wire and Cowl Side J/B LH (Left Kick Panel)
2E	28	Dash Wire and Cowl Side J/B LH (Left Kick Panel)
5C	56	Dash Wire and J/B No 5 (Behind the Combination Meter)
5D	56	Engine Room No 2 Wire and J/B No 5 (Behind the Combination Meter)
6B	60	Dash Wire and J/B No 6 (Behind the Grove Box)
6C		
6D	60	Engine Wire and J/B No 6 (Behind the Grove Box)

□ : Connector Joining Wire Harness and Wire Harness

Code	See Page	Joining Wire Harness and Wire Harness (Connector Location)
ED1	76	Engine No 2 Wire and Engine Room No 2 Wire (Near the Engine Room J/B)
If1	84	Engine Wire and Engine Wire (Behind the Glove Box)

▽ : Ground Points

Code	See Page	Ground Points Location
EE	76	Front Left Side of Fender Apron

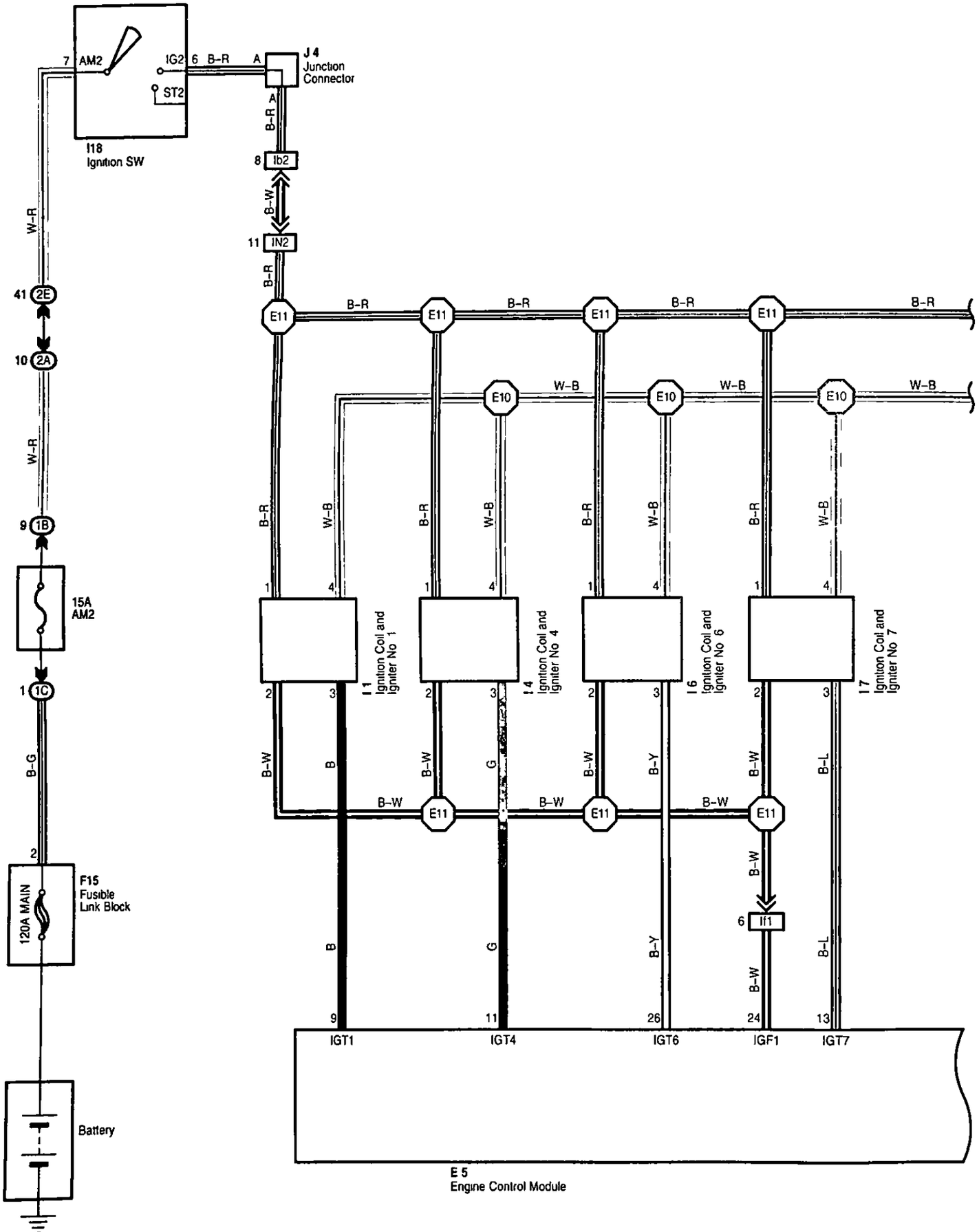
I18
Ignition SW
7 AM2
IG2 6 B-R A
ST2
J 4
Junction
Connector
B-R
8 Ib2
B-W
11 IN2
B-R
W-R
41 2E
10 2A
W-R
9 1B
15A
AM2
1 1C
B-G
2
F15
Fusible
Link Block
120A MAIN
Battery
E11
E10
B-R
W-B
B-W
B
G
B-Y
B-L
I1
Ignition Coil and
Igniter No 1
I4
Ignition Coil and
Igniter No 4
I6
Ignition Coil and
Igniter No 6
I7
Ignition Coil and
Igniter No 7
If1
IGT1
IGT4
IGT6
IGF1
IGT7
E 5
Engine Control Module

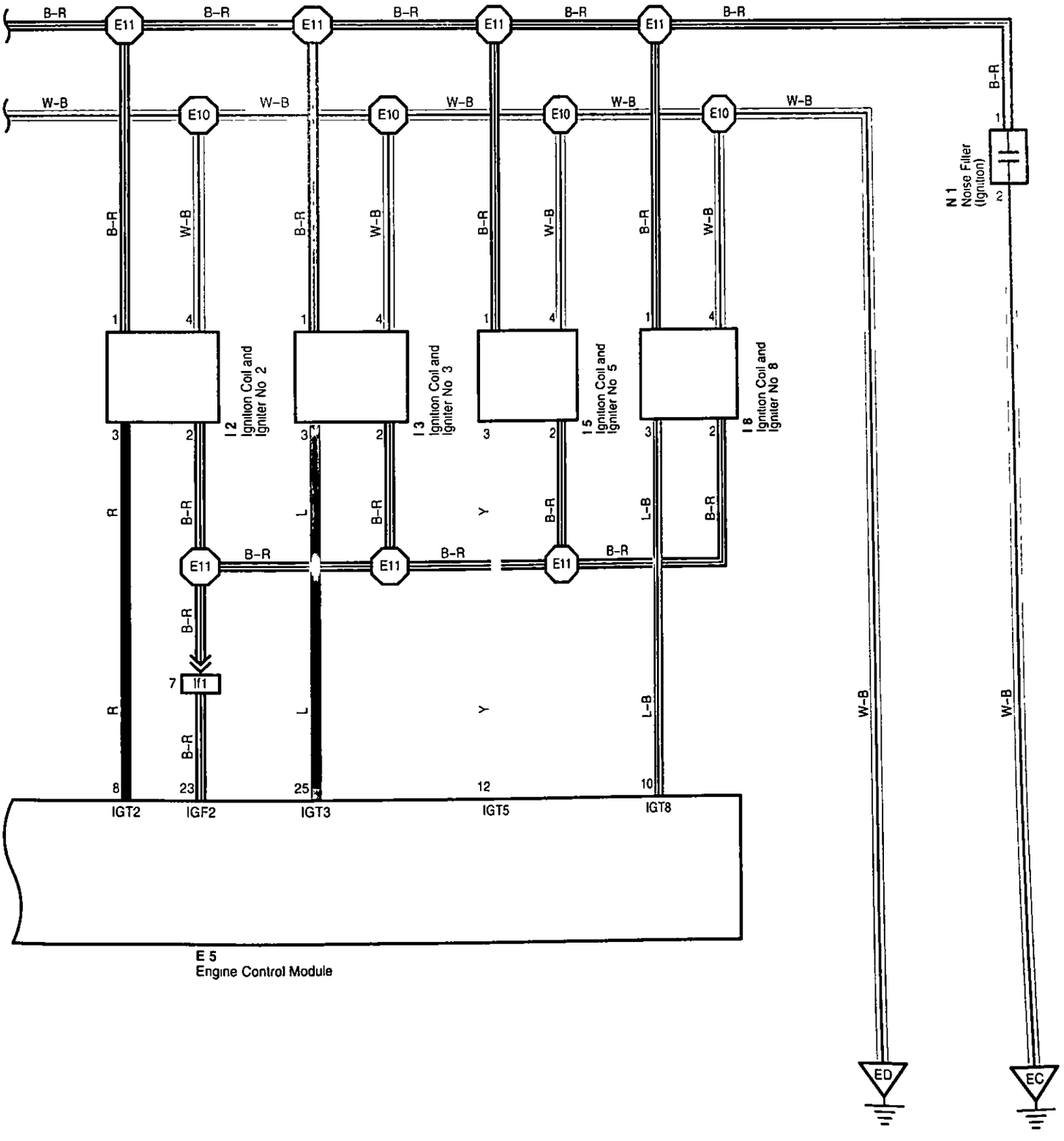
B-R
E11
W-B
E10
I 2
Ignition Coil and
Igniter No 2
I 3
Ignition Coil and
Igniter No 3
I 5
Ignition Coil and
Igniter No 5
I 8
Ignition Coil and
Igniter No 8
N 1
Noise Filter
(Ignition)
R
L
Y
L-B
IF1
IGT2
IGF2
IGT3
IGT5
IGT8
E 5
Engine Control Module
ED
EC

Ignition

Service Hints

I18 Ignition SW

7-6 : Closed with ignition SW at ON or ST position

○ : Parts Location

Code	See Page	Code	See Page	Code	See Page
E5	70	I4	69	I18	70
F15	68	I5	69	J4	71
I1	69	I6	69	N1	69
I2	69	I7	69		
I3	69	I8	69		

⬭ : Junction Block and Wire Harness Connector

Code	See Page	Junction Block and Wire Harness (Connector Location)
1B	24	Engine Room No 2 Wire and Engine Room J/B (Engine Compartment Left)
1C		
2A	28	Engine Room No 2 Wire and Cowl Side J/B LH (Left Kick Panel)
2E	28	Dash Wire and Cowl Side J/B LH (Left Kick Panel)

□ : Connector Joining Wire Harness and Wire Harness

Code	See Page	Joining Wire Harness and Wire Harness (Connector Location)
IN2	80	Engine Wire and Dash Wire (Behind the Glove Box)
Ib2	84	Dash Wire and Dash Wire (Behind the Combination Meter)
If1	84	Engine Wire and Engine Wire (Behind the Glove Box)

▽ : Ground Points

Code	See Page	Ground Points Location
EC	76	Rear Bank of Right Cylinder Head
ED	76	Rear Bank of Left Cylinder Head

⬡ : Splice Points

Code	See Page	Wire Harness with Splice Points	Code	See Page	Wire Harness with Splice Points
E10	76	Engine Wire	E11	76	Engine Wire

Charging

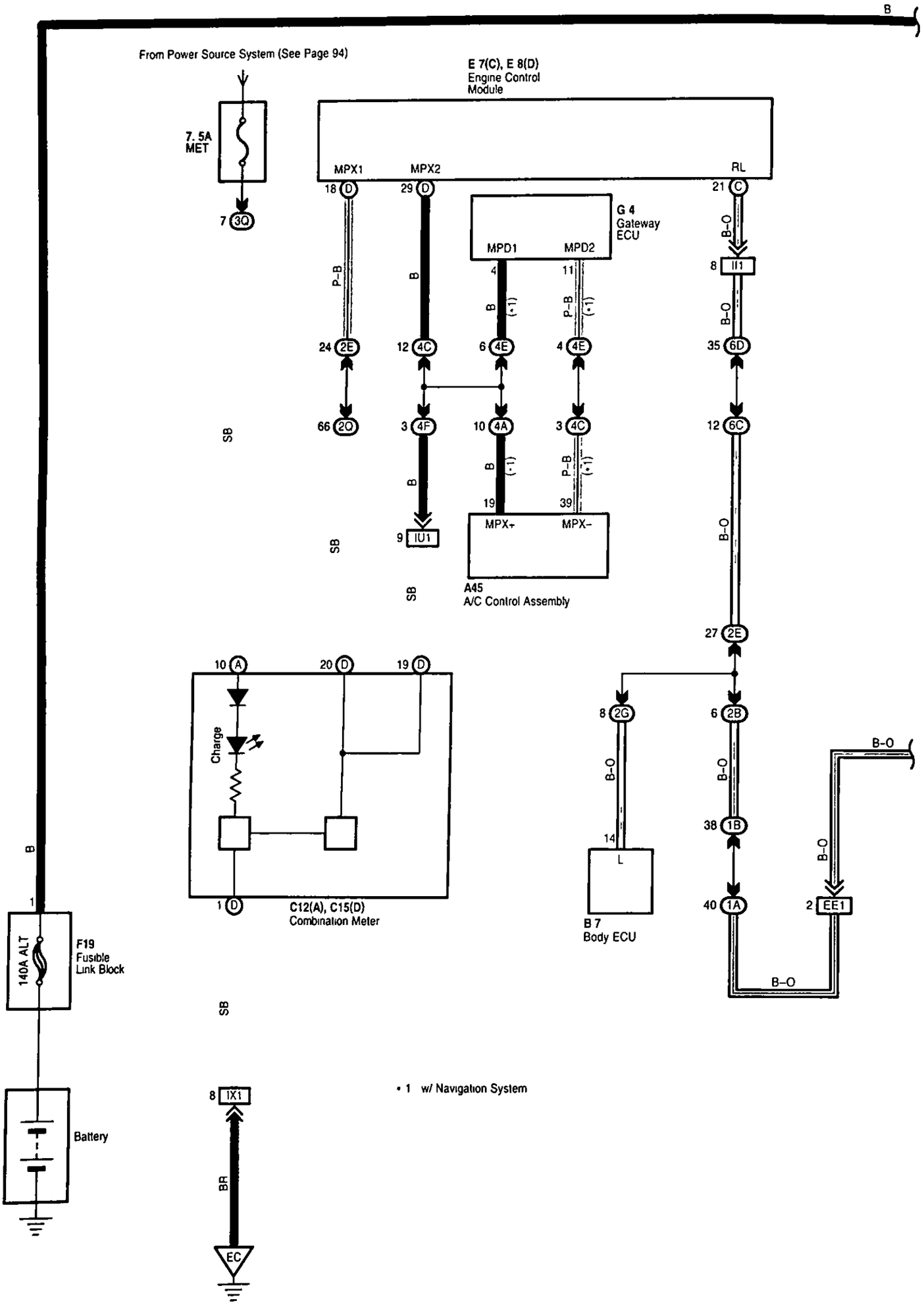
From Power Source System (See Page 94)
B
7.5A MET
7 3Q
E 7(C), E 8(D) Engine Control Module
MPX1
MPX2
RL
18 D
29 D
21 C
P-B
B
B-O
G 4 Gateway ECU
MPD1
MPD2
4
11
8 I1
24 2E
12 4C
6 4E
4 4E
35 6D
66 2O
3 4F
10 4A
3 4C
12 6C
SB
B
(-1)
19
39
9 IU1
MPX+
MPX-
A45 A/C Control Assembly
27 2E
10 A
20 D
19 D
Charge
8 2G
6 2B
14
L
38 1B
40 1A
2 EE1
B7 Body ECU
1 D
C12(A), C15(D) Combination Meter
1
140A ALT
F19 Fusible Link Block
Battery
8 IX1
BR
EC
• 1 w/ Navigation System

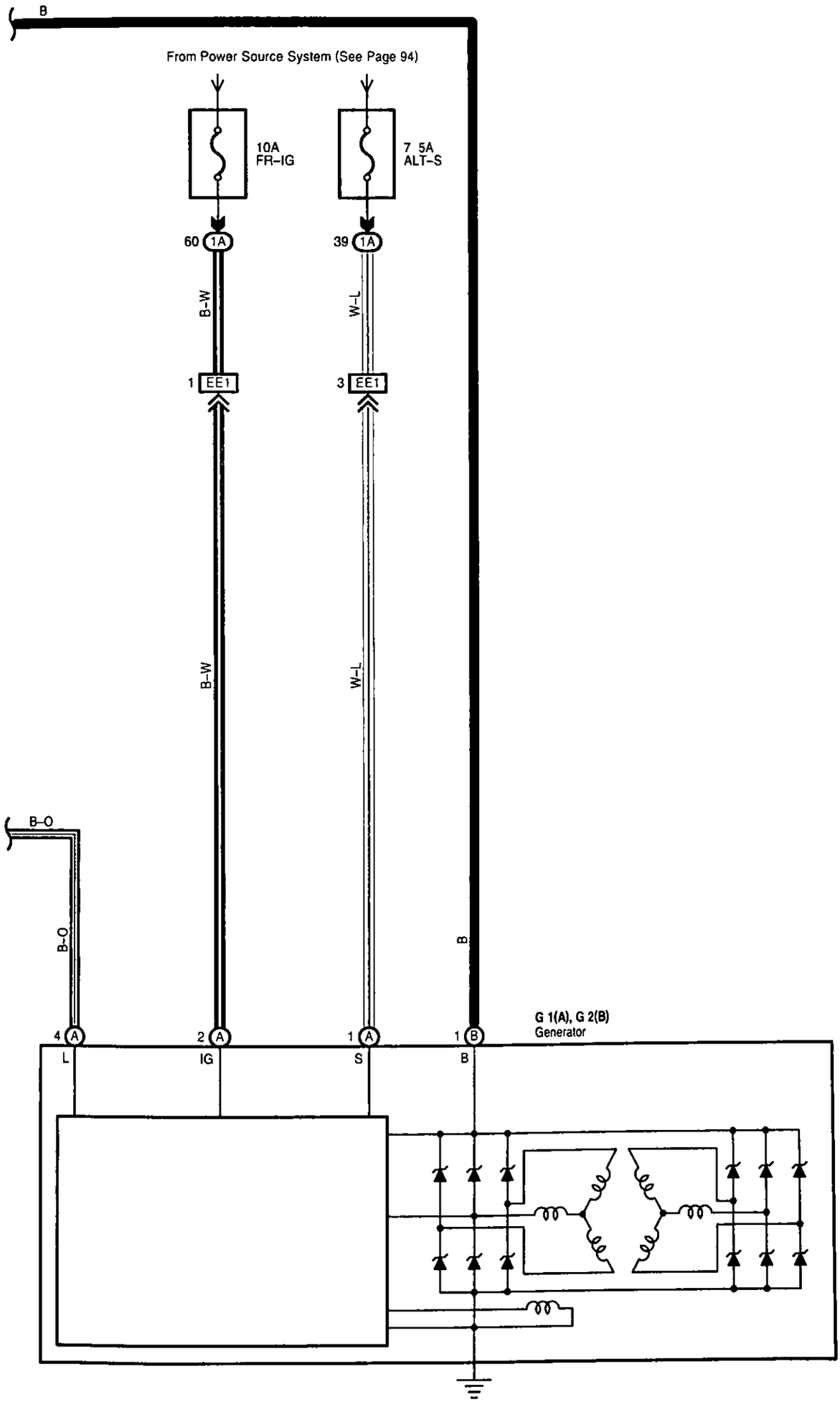
B
From Power Source System (See Page 94)
10A
FR-IG
7 5A
ALT-S
60 1A
39 1A
B-W
W-L
1 EE1
3 EE1
B-W
W-L
B-O
B-O
B
4 A
2 A
1 A
1 B
L
IG
S
B
G 1(A), G 2(B)
Generator

Charging

Service Hints

G2 Generator

1-Ground : 13.2-14.0 volts with engine running at 5000 rpm and 115°C (239°F)

○ : Parts Location

Code		See Page	Code		See Page	Code		See Page
A45		70	E7	C	70	G2	B	68
B7		70	E8	D	70	G4		70
C12	A	70	F19		68			
C15	D	70	G1	A	68			

⬭ : Junction Block and Wire Harness Connector

Code	See Page	Junction Block and Wire Harness (Connector Location)
1A	24	Engine Room Main Wire and Engine Room J/B (Engine Compartment Left)
1B	24	Engine Room No 2 Wire and Engine Room J/B (Engine Compartment Left)
2B	28	Engine Room No 2 Wire and Cowl Side J/B LH (Left Kick Panel)
2E	28	Dash Wire and Cowl Side J/B LH (Left Kick Panel)
2G		
2Q	30	Instrument Panel Integration Wire and Cowl Side J/B LH (Left Kick Panel)
3Q	42	Instrument Panel Integration Wire and Cowl Side J/B RH (Right Kick Panel)
4A	52	Dash Wire and J/B No 4 (Instrument Panel Center)
4C		
4E		
4F		
6C	60	Dash Wire and J/B No 6 (Behind the Grove Box)
6D	60	Engine Wire and J/B No 6 (Behind the Grove Box)

□ : Connector Joining Wire Harness and Wire Harness

Code	See Page	Joining Wire Harness and Wire Harness (Connector Location)
EE1	76	Engine Room Main Wire and Alternator Wire (Near the Battery)
IU1	82	Instrument Panel Integration Wire and Dash Wire (Behind the Glove Box)
IX1	82	Instrument Panel Integration Wire and Engine Wire (Behind the Glove Box)
If1	84	Engine Wire and Engine Wire (Behind the Glove Box)

▽ : Ground Points

Code	See Page	Ground Points Location
EC	76	Rear Bank of Right Cylinder Head

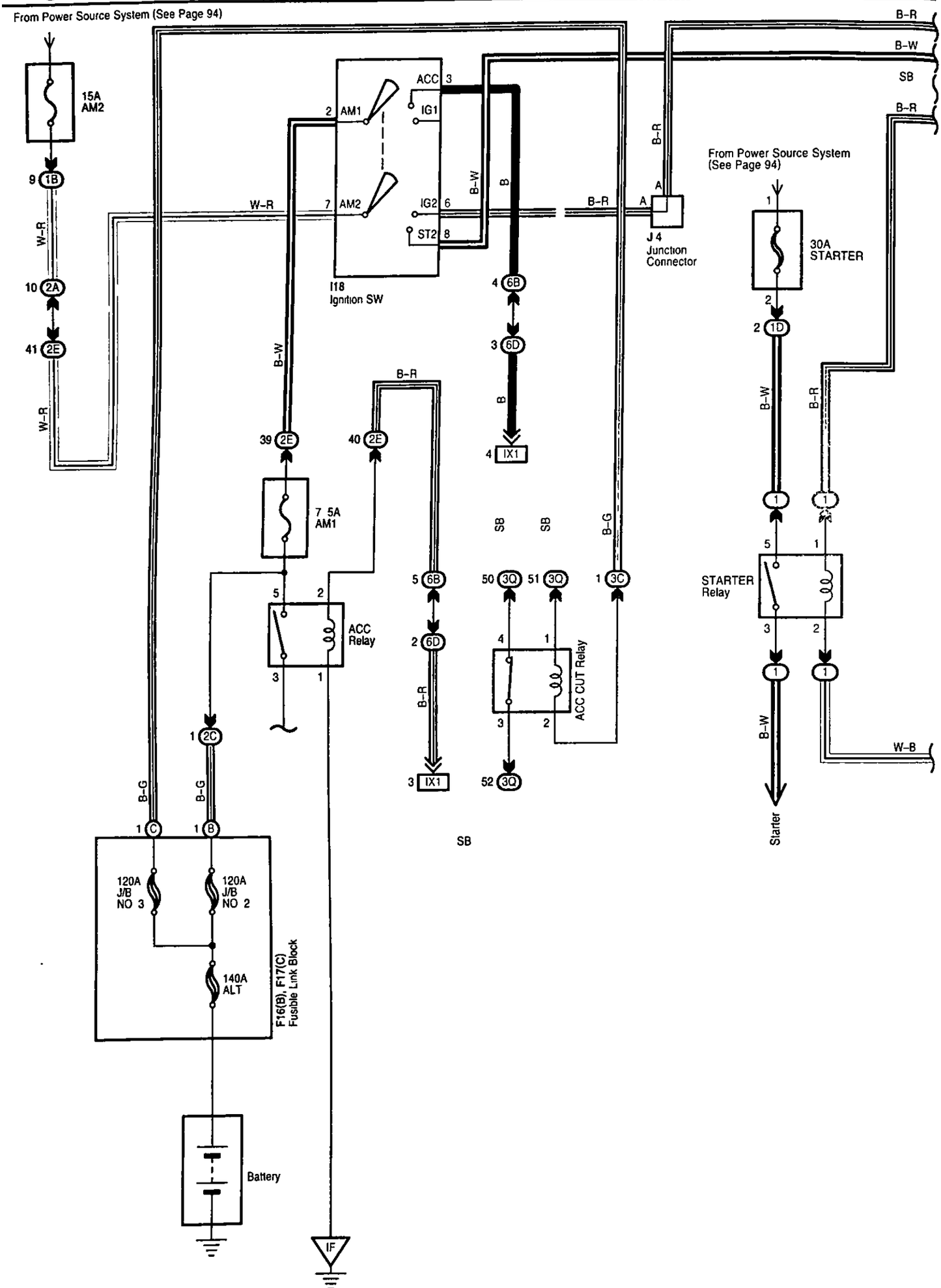
From Power Source System (See Page 94)
15A AM2
9 1B
W-R
10 2A
41 2E
W-R
W-R
7 AM2
2 AM1
ACC 3
IG1
IG2 6
ST2 8
I18 Ignition SW
B-W
B
4 6B
3 6D
B
4 IX1
B-R
39 2E
40 2E
B-W
7 5A AM1
5 2
ACC Relay
3 1
5 6B
2 6D
B-R
3 IX1
SB
SB
B-G
50 3Q
51 3Q
1 3C
4 1
ACC CUT Relay
3 2
52 3Q
1 2C
B-G
B-G
1 C
1 B
120A J/B NO 3
120A J/B NO 2
140A ALT
F16(B), F17(C) Fusible Link Block
Battery
IF
B-R
B-W
SB
B-R
B-R
A
A
J 4 Junction Connector
From Power Source System (See Page 94)
1
30A STARTER
2
2 1D
B-W
B-R
1
1
5
1
STARTER Relay
3
2
1
1
B-W
W-B
Starter

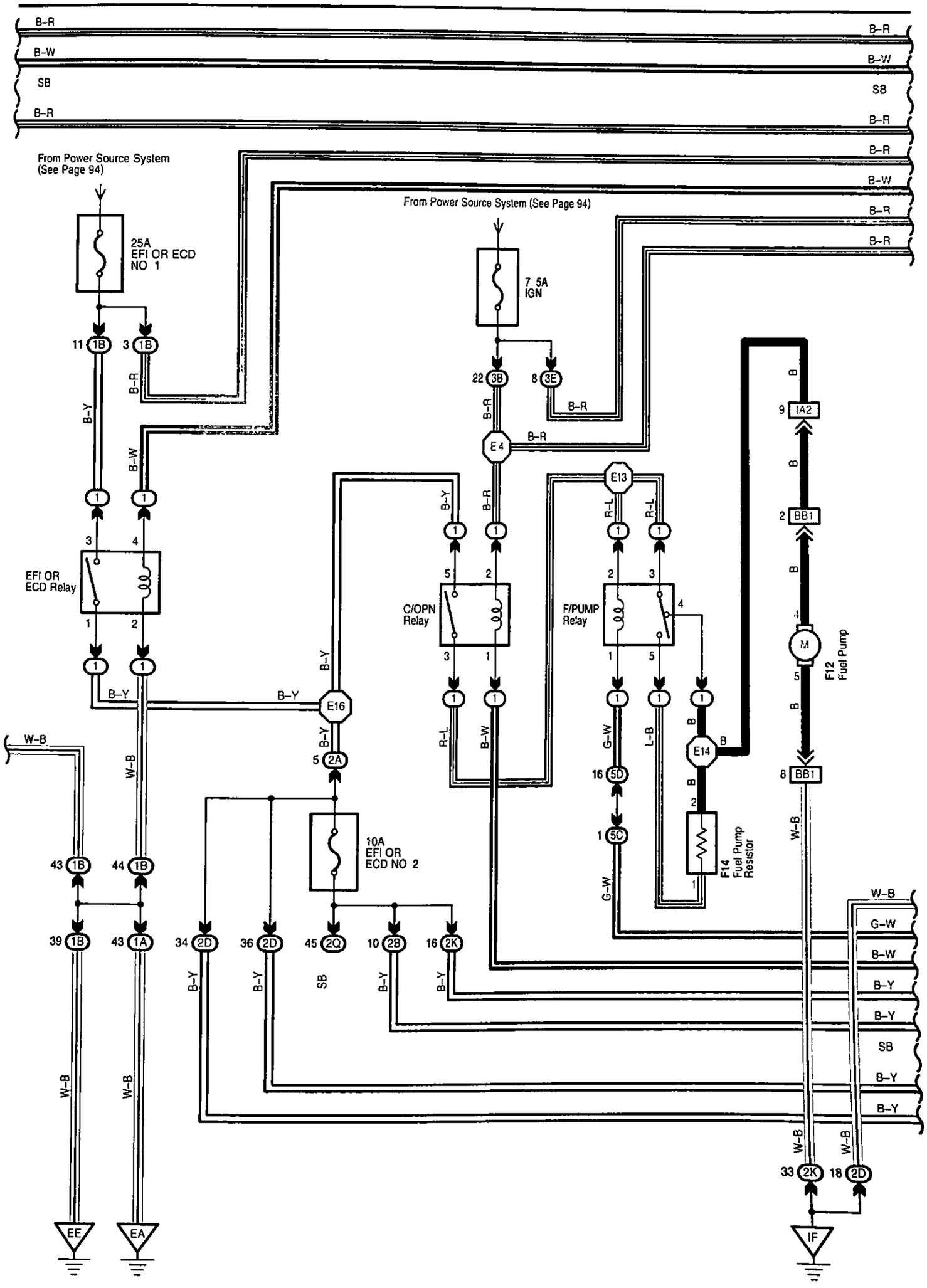
B-R
B-W
SB
B-R
From Power Source System (See Page 94)
25A EFI OR ECD NO 1
7 5A IGN
EFI OR ECD Relay
C/OPN Relay
F/PUMP Relay
E16
E4
E13
E14
10A EFI OR ECD NO 2
F12 Fuel Pump
F14 Fuel Pump Resistor
EE
EA
IF

Engine Control

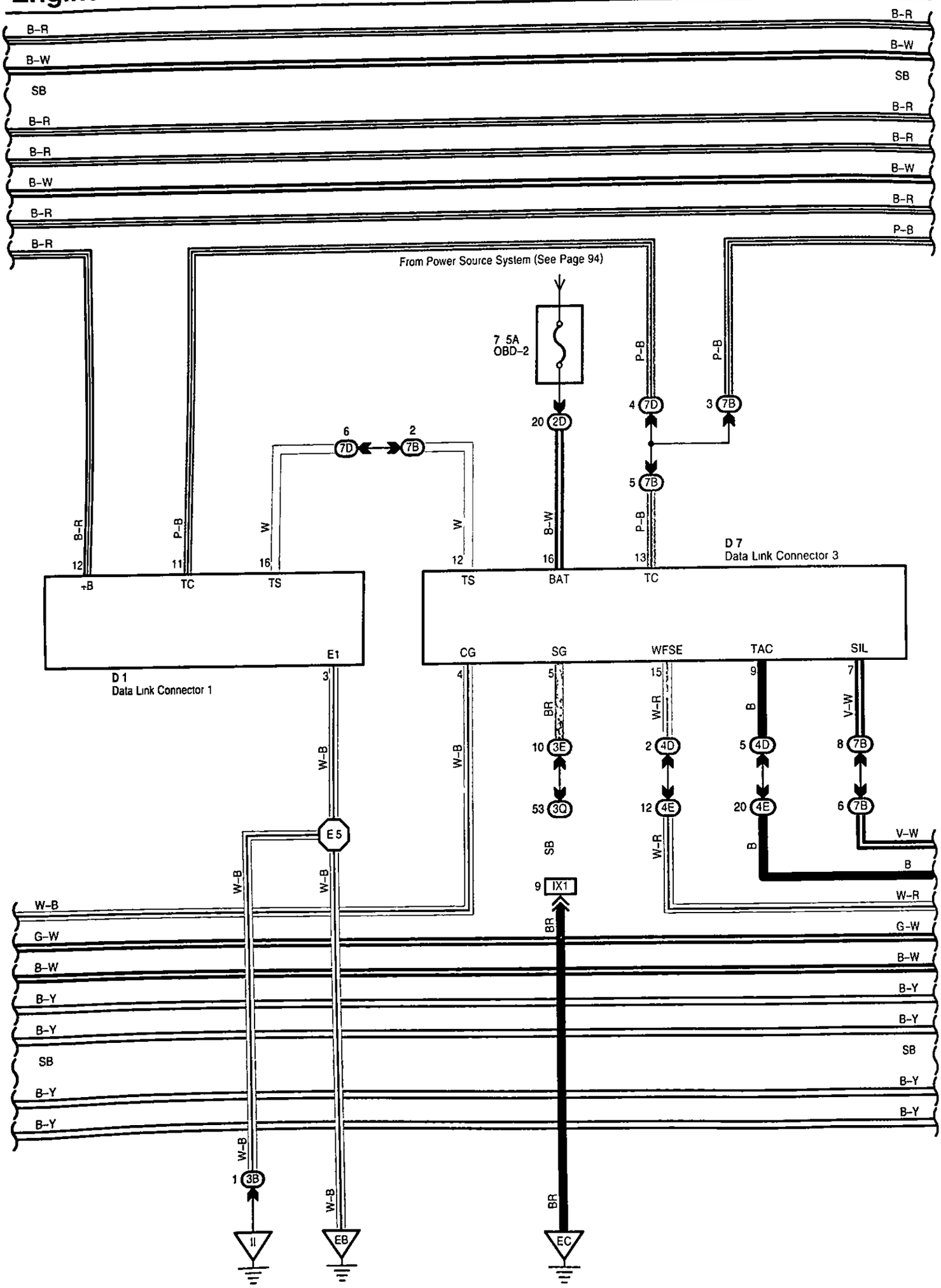

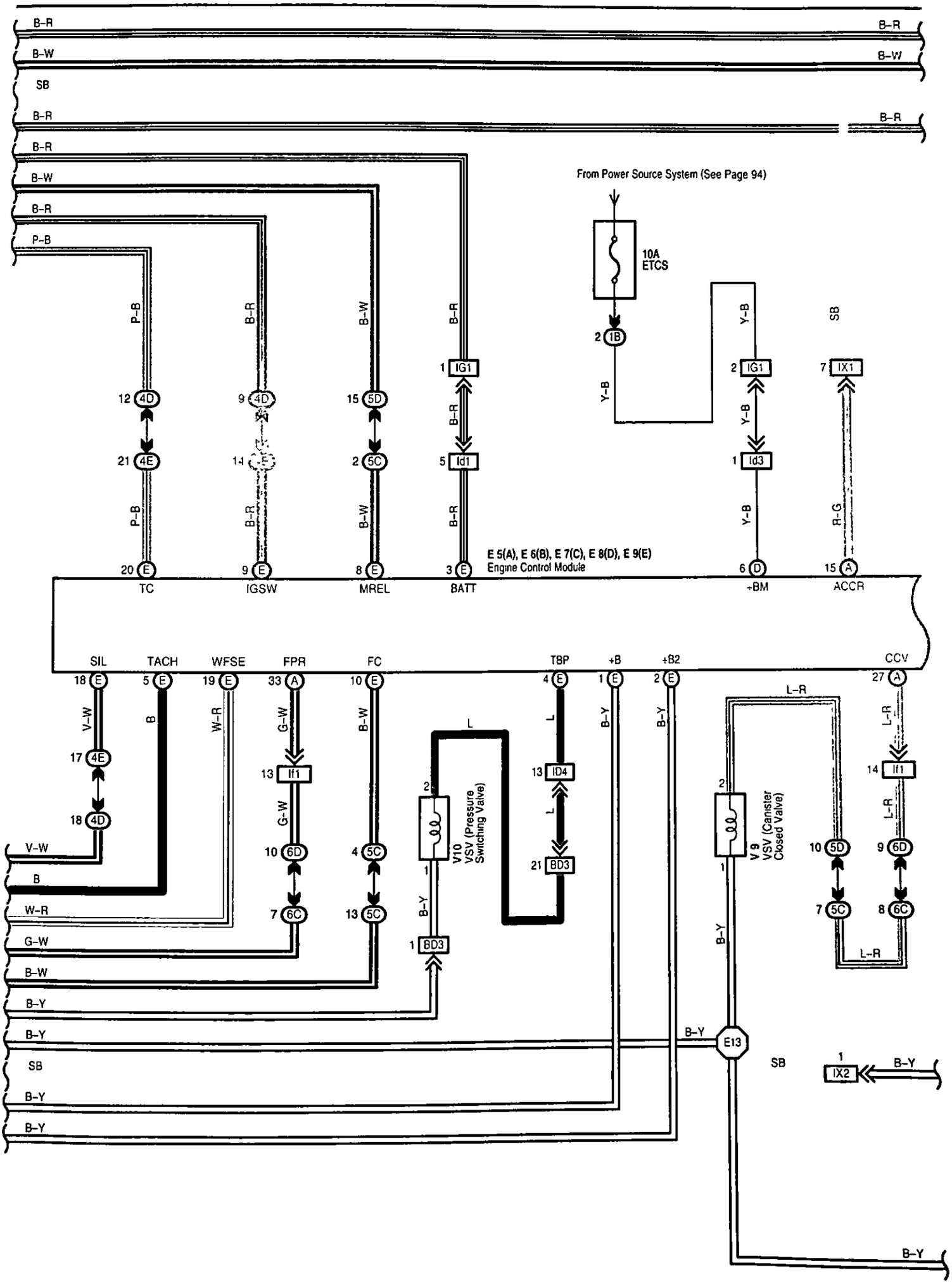
From Power Source System (See Page 94)
10A ETCS
E 5(A), E 6(B), E 7(C), E 8(D), E 9(E) Engine Control Module
TC
IGSW
MREL
BATT
+BM
ACCR
SIL
TACH
WFSE
FPR
FC
TBP
+B
+B2
CCV
V10 VSV (Pressure Switching Valve)
V9 VSV (Canister Closed Valve)
E13
IX2

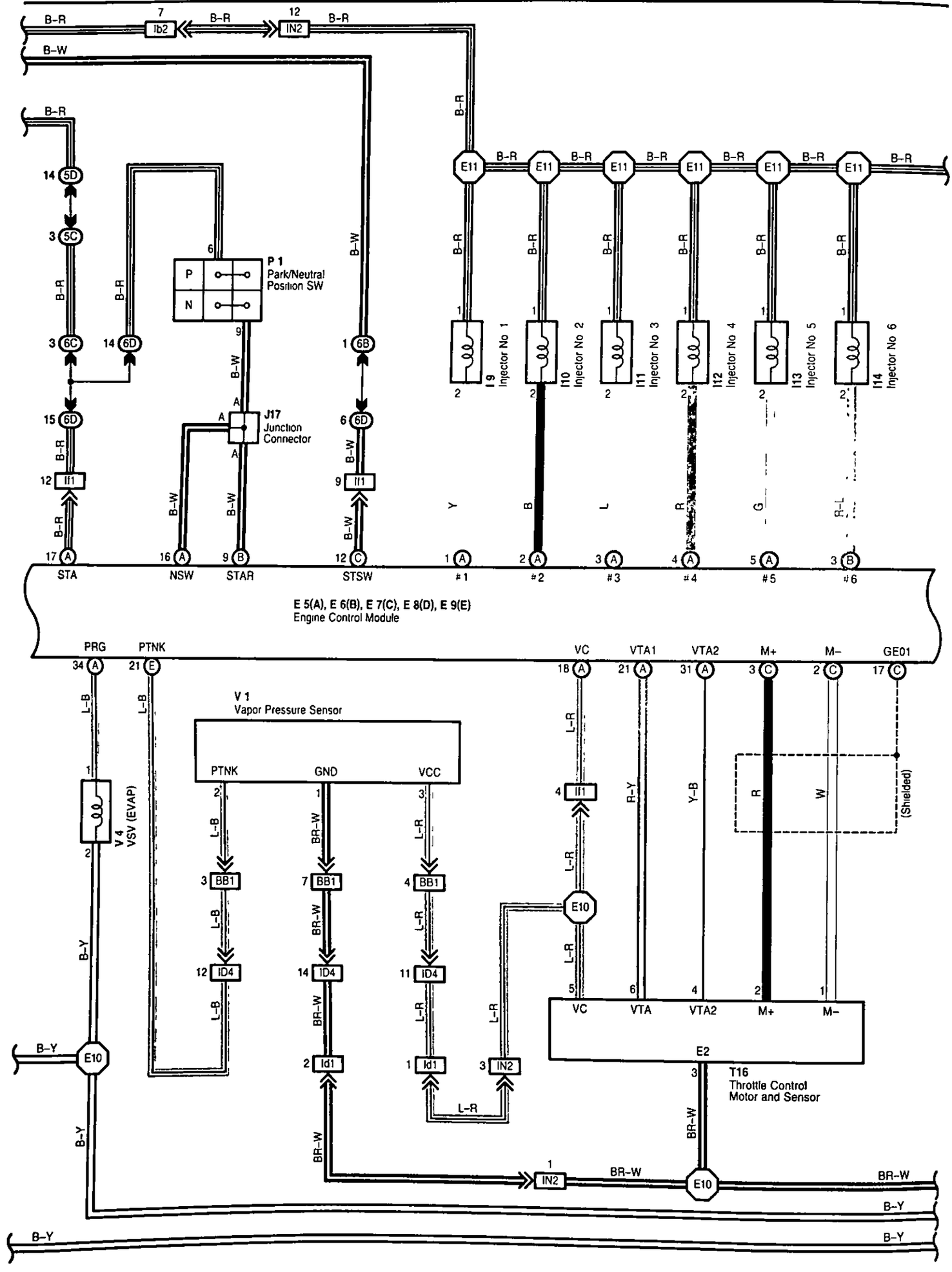
B-R
B-W
7
Ib2
12
IN2
14 5D
3 5C
3 6C
14 6D
15 6D
12 I1
17 A
STA
6
P
N
P 1
Park/Neutral
Position SW
9
B-W
A
J17
Junction
Connector
16 A
NSW
9 B
STAR
1 6B
6 6D
9 I1
12 C
STSW
E11
I9 Injector No 1
I10 Injector No 2
I11 Injector No 3
I12 Injector No 4
I13 Injector No 5
I14 Injector No 6
Y
B
L
R
G
R-L
1 A
#1
2 A
#2
3 A
#3
4 A
#4
5 A
#5
3 B
#6
E 5(A), E 6(B), E 7(C), E 8(D), E 9(E)
Engine Control Module
PRG
PTNK
VC
VTA1
VTA2
M+
M-
GE01
34 A
21 E
18 A
21 A
31 A
3 C
2 C
17 C
V 1
Vapor Pressure Sensor
PTNK
GND
VCC
V 4
VSV (EVAP)
L-B
BR-W
L-R
R-Y
Y-B
R
W
(Shielded)
3 BB1
7 BB1
4 BB1
12 ID4
14 ID4
11 ID4
2 Id1
1 Id1
3 IN2
4 I1
E10
5 VC
6 VTA
4 VTA2
2 M+
1 M-
E2
T16
Throttle Control
Motor and Sensor
B-Y
BR-W

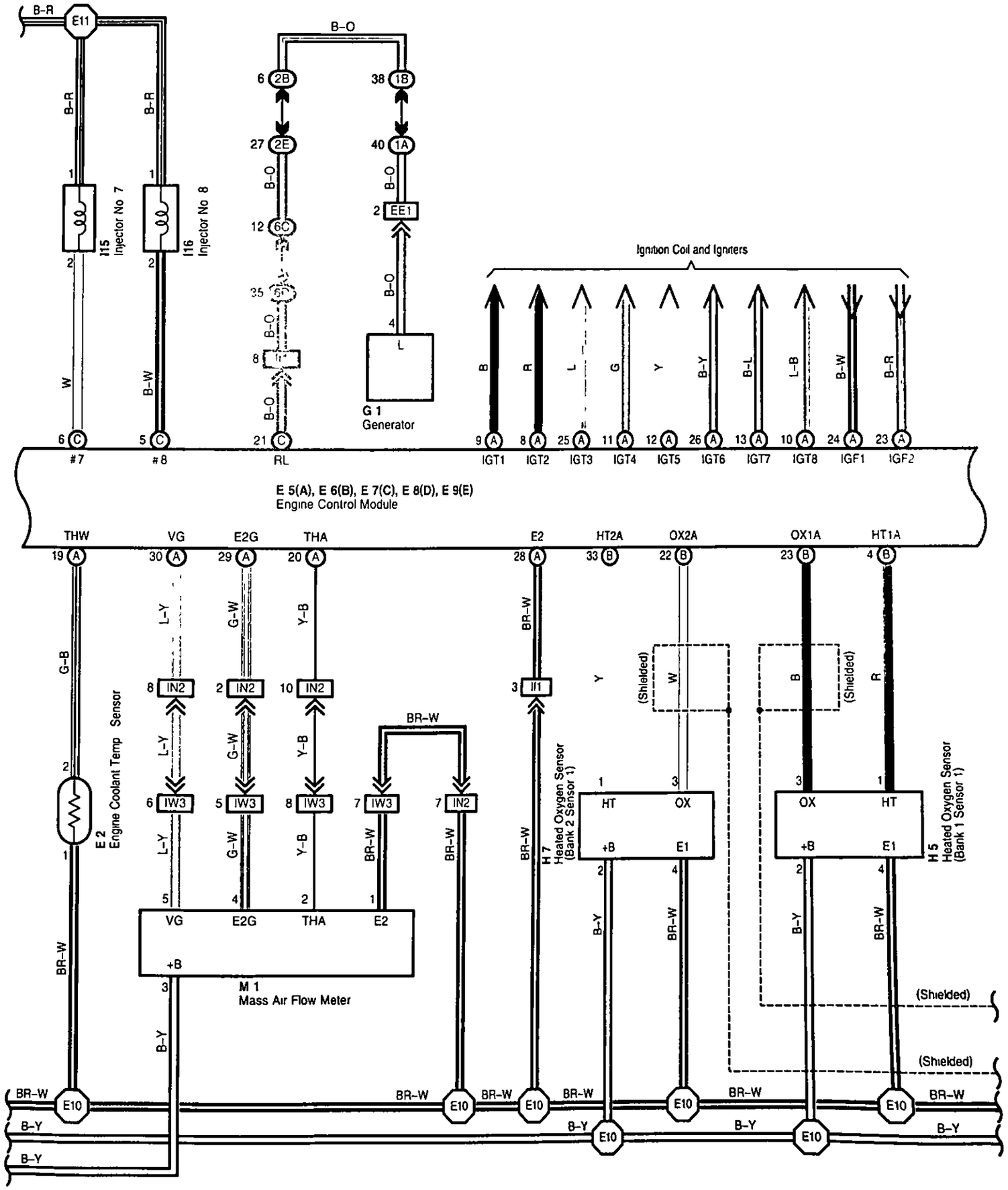

B-R
E11
B-R
B-R
I15
Injector No 7
I16
Injector No 8
W
B-W
B-O
6 2B
38 1B
27 2E
40 1A
12 6C
2 EE1
35
8
4
L
G 1
Generator
Ignition Coil and Igniters
B
R
L
G
Y
B-Y
B-L
L-B
B-W
B-R
6 C
5 C
21 C
9 A
8 A
25 A
11 A
12 A
26 A
13 A
10 A
24 A
23 A
#7
#8
RL
IGT1
IGT2
IGT3
IGT4
IGT5
IGT6
IGT7
IGT8
IGF1
IGF2
E 5(A), E 6(B), E 7(C), E 8(D), E 9(E)
Engine Control Module
THW
VG
E2G
THA
E2
HT2A
OX2A
OX1A
HT1A
19 A
30 A
29 A
20 A
28 A
33 B
22 B
23 B
4 B
G-B
L-Y
G-W
Y-B
BR-W
8 IN2
2 IN2
10 IN2
3 II1
Y
(Shielded)
W
B
(Shielded)
R
BR-W
E 2
Engine Coolant Temp Sensor
6 IW3
5 IW3
8 IW3
7 IW3
7 IN2
H 7
Heated Oxygen Sensor
(Bank 2 Sensor 1)
HT
OX
+B
E1
H 5
Heated Oxygen Sensor
(Bank 1 Sensor 1)
VG
E2G
THA
E2
+B
M 1
Mass Air Flow Meter
B-Y
(Shielded)
(Shielded)
BR-W
E10
B-Y

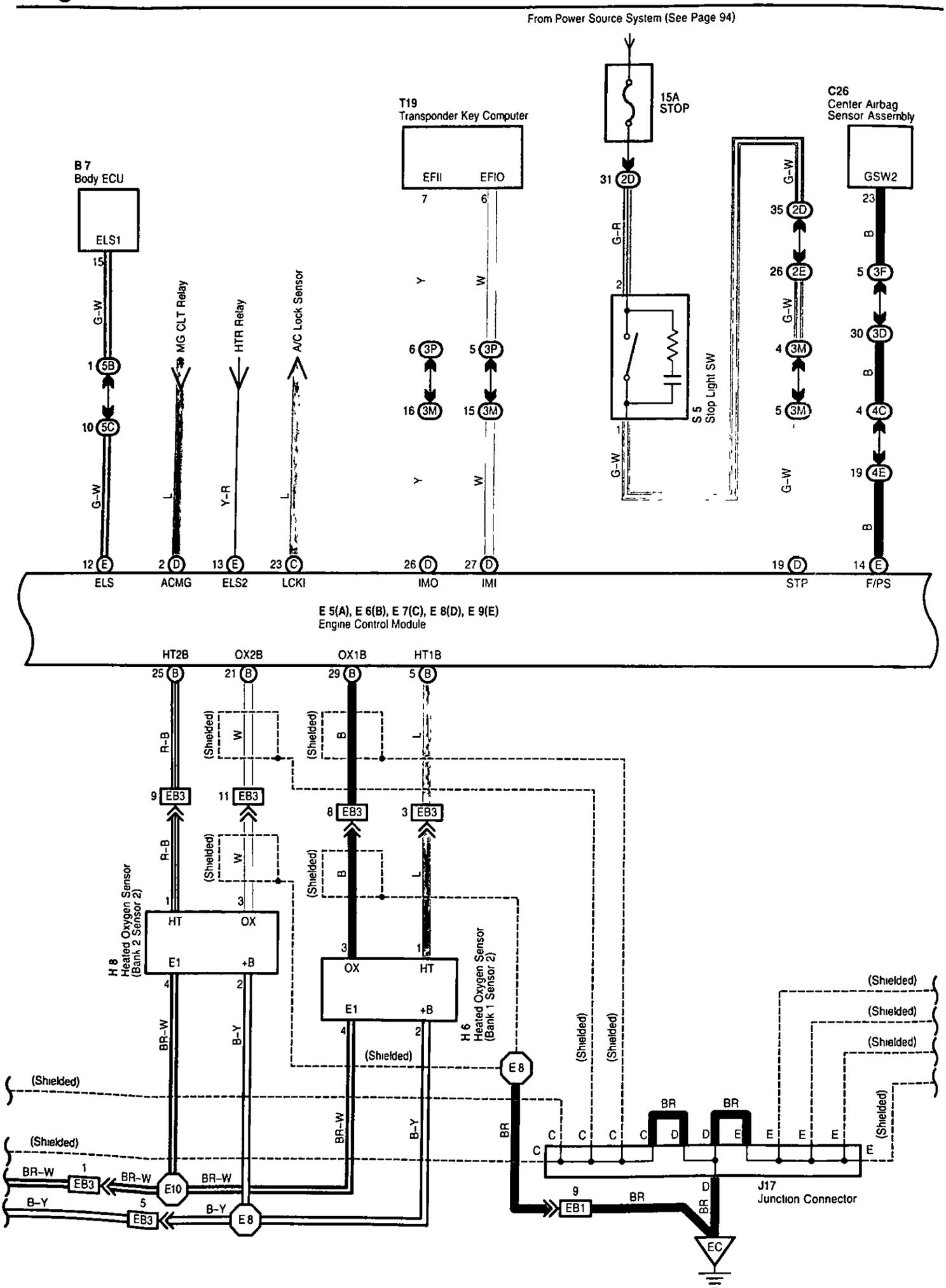
From Power Source System (See Page 94)
15A
STOP
T19
Transponder Key Computer
EFII
EFIO
C26
Center Airbag
Sensor Assembly
GSW2
B 7
Body ECU
ELS1
MG CLT Relay
HTR Relay
A/C Lock Sensor
S 5
Stop Light SW
ELS
ACMG
ELS2
LCKI
IMO
IMI
STP
F/PS
E 5(A), E 6(B), E 7(C), E 8(D), E 9(E)
Engine Control Module
HT2B
OX2B
OX1B
HT1B
H 8
Heated Oxygen Sensor
(Bank 2 Sensor 2)
H 6
Heated Oxygen Sensor
(Bank 1 Sensor 2)
(Shielded)
J17
Junction Connector
EC

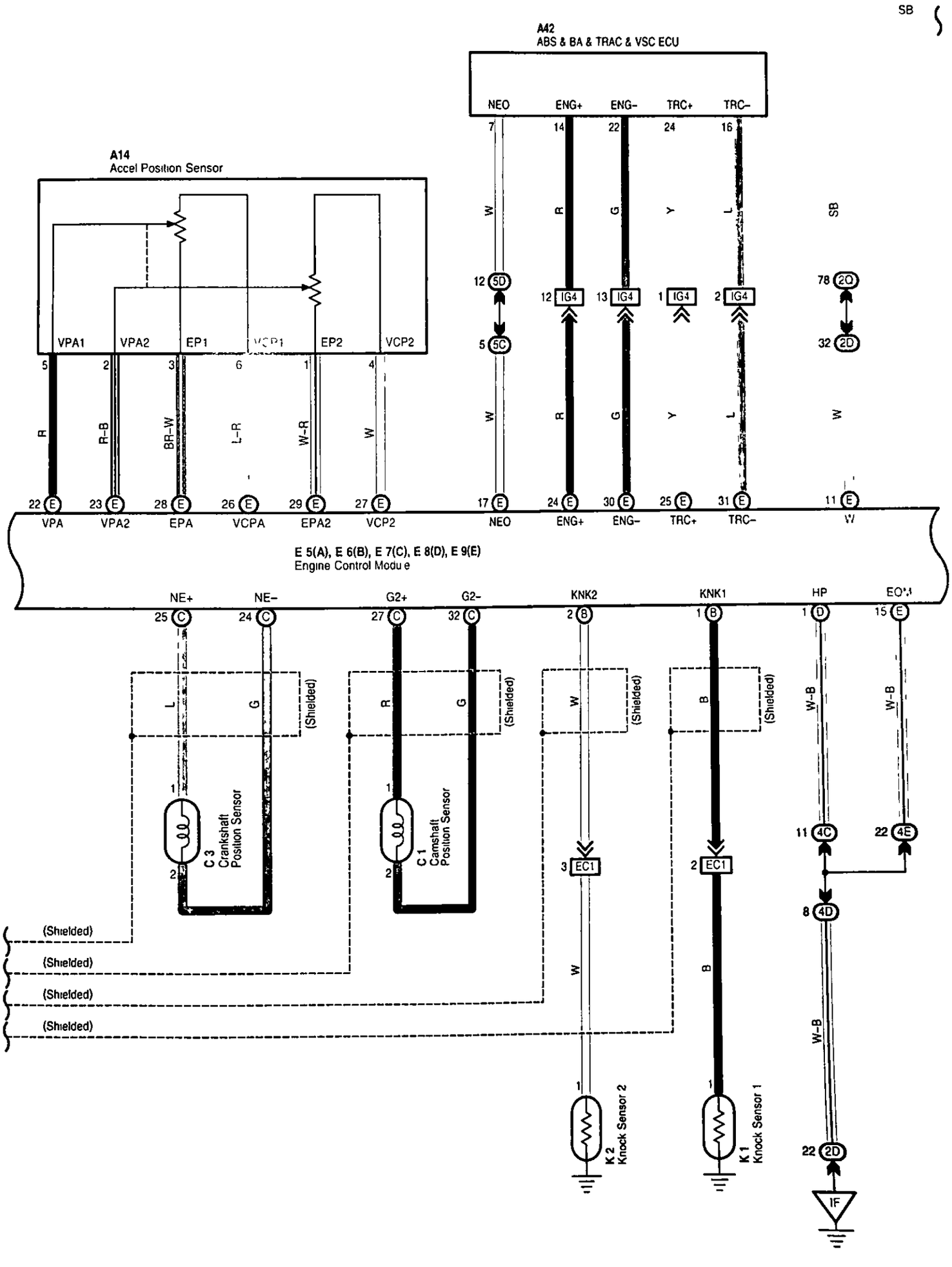
SB
A42
ABS & BA & TRAC & VSC ECU
NEO
ENG+
ENG-
TRC+
TRC-
A14
Accel Position Sensor
VPA1
VPA2
EP1
VCP1
EP2
VCP2
VPA
VPA2
EPA
VCPA
EPA2
VCP2
E 5(A), E 6(B), E 7(C), E 8(D), E 9(E)
Engine Control Module
NE+
NE-
G2+
G2-
KNK2
KNK1
HP
EO1
C 3
Crankshaft Position Sensor
C 1
Camshaft Position Sensor
K 2
Knock Sensor 2
K 1
Knock Sensor 1
(Shielded)
IF

• 1 w/ Navigation System

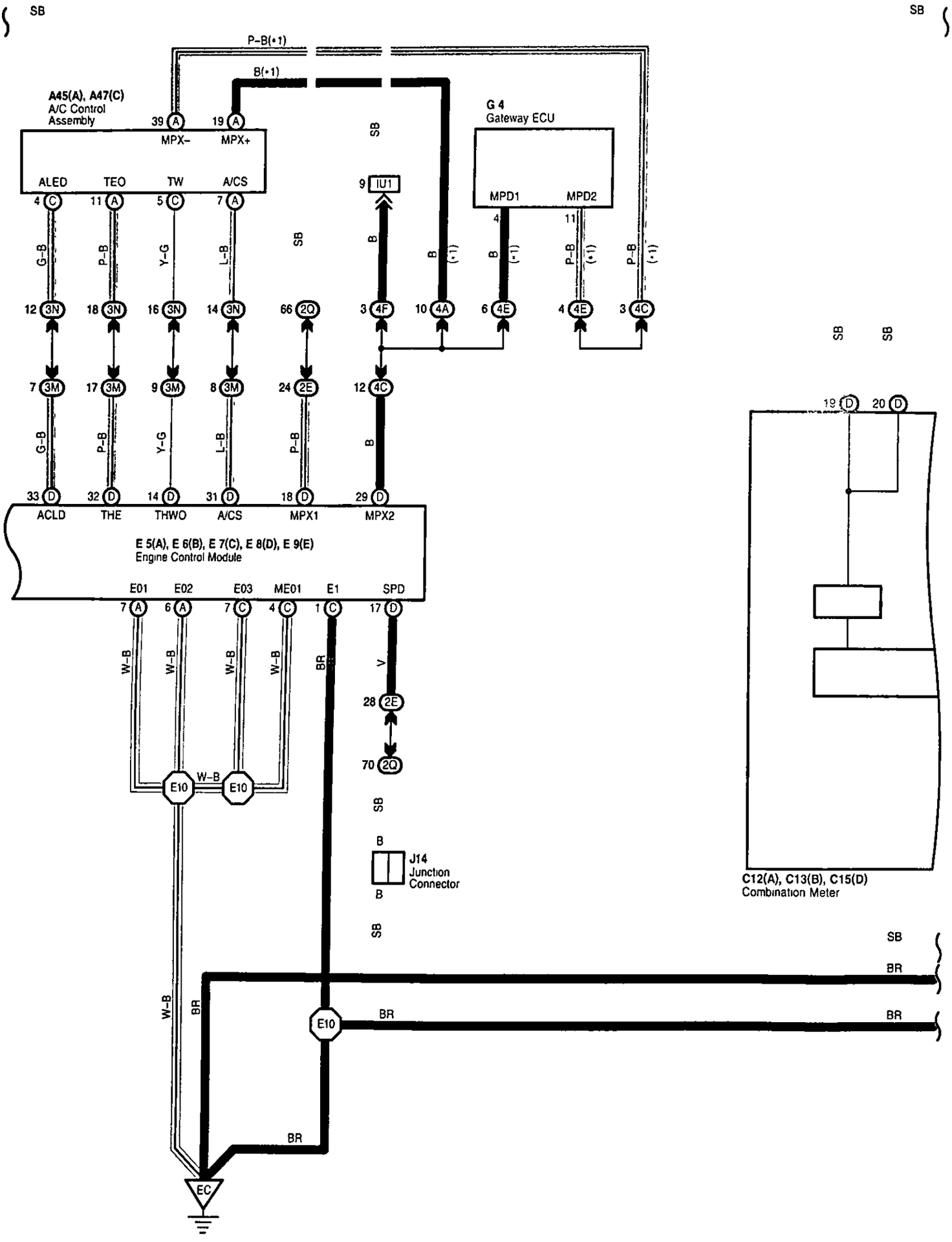

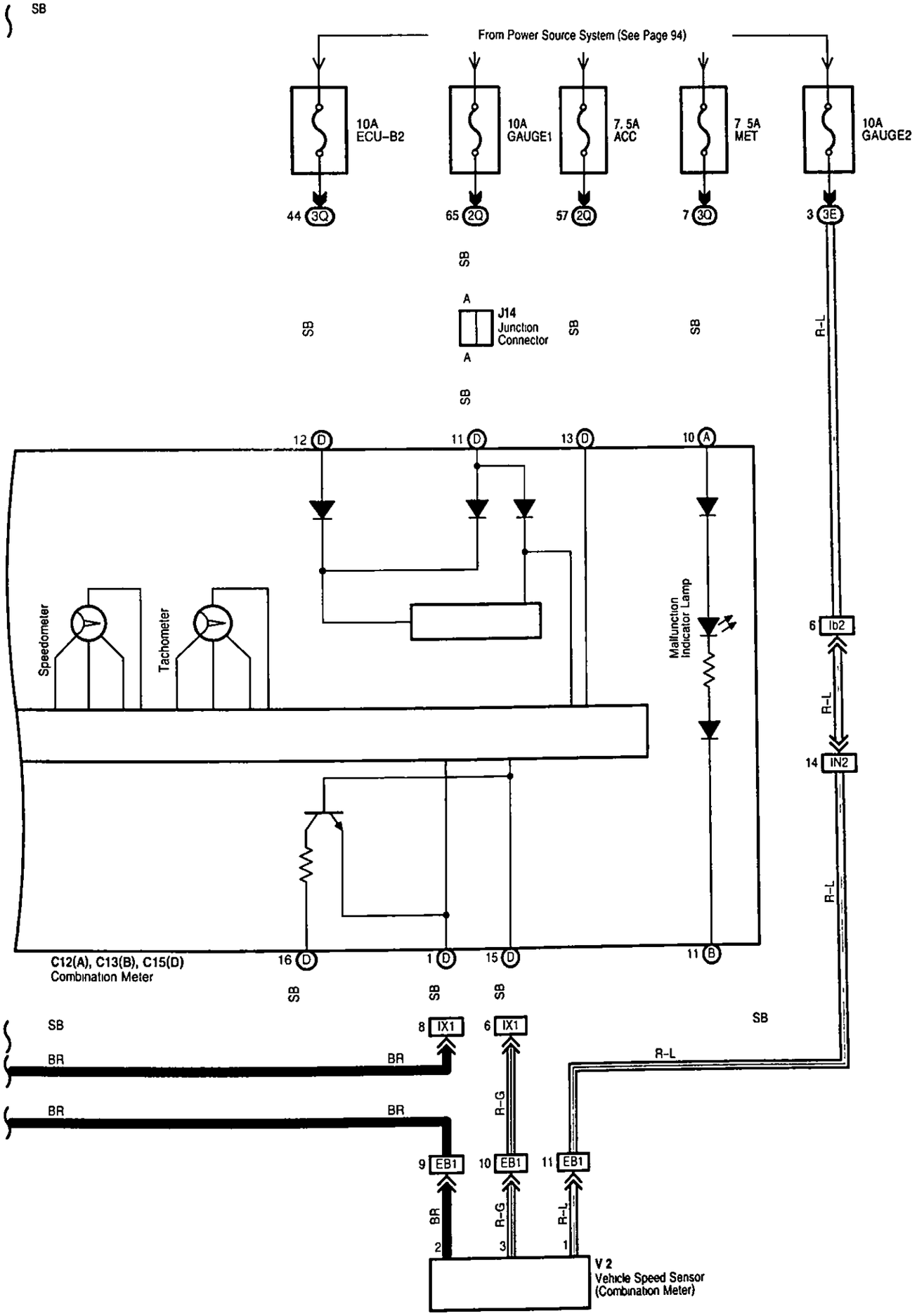
SB
From Power Source System (See Page 94)
10A
ECU-B2
10A
GAUGE1
7.5A
ACC
7.5A
MET
10A
GAUGE2
44 3Q
65 2Q
57 2Q
7 3Q
3 3E
SB
A
J14
Junction
Connector
A
SB
SB
SB
R-L
12 D
11 D
13 D
10 A
Speedometer
Tachometer
Malfunction
Indicator Lamp
6 Ib2
R-L
14 IN2
R-L
C12(A), C13(B), C15(D)
Combination Meter
16 D
1 D
15 D
11 B
SB
SB
SB
SB
SB
8 IX1
6 IX1
BR
BR
R-L
BR
BR
R-G
9 EB1
10 EB1
11 EB1
BR
R-G
R-L
2
3
1
V2
Vehicle Speed Sensor
(Combination Meter)

Engine Control

System Outline

The engine control system utilizes a microcomputer and maintains overall control of the engine, transmission etc. An outline of the engine control is given here.

1. Input Signals

(1) Engine coolant temp. signal circuit

The engine coolant temp. sensor detects the engine coolant temp. and has a built-in thermistor with a resistance which varies according to the engine coolant temp. The engine coolant temp. is input into TERMINAL THW of the engine control module as a control signal.

(2) Intake air temp. signal circuit

The intake air temp. sensor is installed in the mass air flow meter and detects the intake air temp., which is input as a control signal to TERMINAL THA of the engine control module.

(3) Oxygen sensor signal circuit

The oxygen density in the exhaust emission is detected and is input as a control signal from the heated oxygen sensors to TERMINALS OX1A, OX1B, OX2A, OX2B of the engine control module.

(4) RPM signal circuit

The camshaft position is detected by the camshaft position sensor and is input into TERMINAL G2+ of the engine control module as a control signal. Also, the engine RPM is detected by the crankshaft position sensor and the signal is input into TERMINAL NE+ of the engine control module.

(5) Throttle position sensor signal circuit

The throttle position sensor detects the throttle valve opening angle as a control signal, which is input into TERMINALS VTA1, VTA2 of the engine control module.

(6) Vehicle speed circuit

The vehicle speed sensor (Combination meter) detects the vehicle speed, and the signal is input into TERMINAL SPD of the engine control module via the combination meter.

(7) Battery signal circuit

Voltage is constantly applied to TERMINAL BATT of the engine control module. When the ignition SW is turned on, the voltage for engine control module start up power supply is applied through the EFI OR ECD relay, to TERMINALS +B, +B2 of the engine control module. The current from the IGN fuse flows to TERMINAL IGSW of the engine control module, and voltage is constantly applied to TERMINAL +BM.

(8) Intake air volume signal circuit

The intake air volume is detected by the mass air flow meter, and is input as a control signal to TERMINAL VG of the engine control module.

(9) Stop light SW signal circuit

The stop light SW is used to detect whether the vehicle is braking or not, and the signal is input into TERMINAL STP of the engine control module as a control signal.

(10) Starter signal circuit

To confirm whether the engine is cranking, the voltage applied to the starter motor when the engine is cranking is detected, and is input into TERMINAL STA of the engine control module as a control signal.

(11) Engine knock signal circuit

Engine knocking is detected by the knock sensors, and is input into TERMINALS KNK1, KNK2 of the engine control module as a control signal.

2. Control System

* SFI system
The SFI system monitors the engine condition through the signals input from each sensors to the engine control module. The control signal is sent to the engine control module TERMINALS #1, #2, #3, #4, #5, #6, #7, #8 to operate the injector (Fuel injection). The SFI system controls the fuel injection by the engine control module in response to the driving conditions.
* ESA system
The ESA system monitors the engine condition through the signals input from each sensors to the engine control module The best ignition timing is decided according to this data and the data memorized in the engine control module. The control signal is output to TERMINALS IGT1, IGT2, IGT3, IGT4, IGT5, IGT6, IGT7, IGT8, and these signals control the igniter to provide the best ignition timing.
* Heated oxygen sensor heater control system
The heated oxygen sensor heater control system turns the heater on when the intake air volume is low (Temp. of exhaust emission is low), and warms up the heated oxygen sensors to improve their detection performance. The engine control module evaluates the signals from each sensors, and outputs current to TERMINALS HT1A, HT1B, HT2A, HT2B to control the heater
* Fuel pump control system
The engine control module supplies current to TERMINAL FPR, and controls the operation speed of the fuel pump by the F/PUMP relay.
* ACIS
The ACIS includes a valve in the bulkhead separating the surge tank into two parts. This valve is opened and closed in accordance with the driving conditions to control the intake manifold length in two stages, for increased engine output in all ranges from low to high speeds.
* ETCS-i
The ETCS-i controls the engine output at its optimal level in accordance with the opening of the accelerator pedal, under all driving conditions.

3. Diagnosis System

When there is a malfunction in the engine control module signal system, the malfunctioning system is recorded in the memory The malfunctioning system can be found by reading the code displayed on the malfunction indicator lamp.

4. Fail-Safe System

When a malfunction has occurred in any system, there is a possibility of causing engine trouble due to continued control based on that system. In that case, the fail-safe system either controls the system using the data (Standard values) recorded in the engine control module memory, or else stops the engine.

Service Hints

E2 Engine Coolant Temp. Sensor

1-2 : Approx. 15.0 kΩ (-20°C, -4°F)
: Approx. 2.45 kΩ (20°C, 68°F)
: Approx. 0.32 kΩ (80°C, 176°F)

E5 (A), E8 (D), E9 (E) Engine Control Module

BATT-E1 : Always 9.0-14.0 volts
+BM-E1 : Always 9.0-14.0 volts
IGSW-E1 : 9.0-14.0 volts with ignition SW at ON or ST position
+B, +B2-E1 : 9.0-14.0 volts with ignition SW at ON or ST position
VC-E2 : 4.5-5.5 volts with ignition SW on
VTA2-E2 : 2.0-2.9 volts with ignition SW on and accelerator pedal released
: 4.6-5.1 volts with ignition SW on and accelerator pedal depressed
VTA1-E2 : 0.4-1.0 volts with ignition SW on and accelerator pedal released
: 3.2-4.8 volts with ignition SW on and accelerator pedal depressed
THA-E2 : 0.5-3.4 volts with idling, intake air temp. 20°C (68°F)
THW-E2 : 0.2-1.0 volts with idling, engine coolant temp. 80°C (176°F)
W-E1 : 9.0-14.0 volts with idling
: Below 3.0 volts with ignition SW on

Engine Control

○ : Parts Location

Code	See Page	Code	See Page	Code	See Page
A14	70	E9 E	70	I16	69
A42	70	F12	72	I18	70
A45 A	70	F14	68	J4	71
A47 C	70	F16 B	68	J14	71
B7	70	F17 C	68	J17	71
C1	68	G1	68	K1	69
C3	68	G4	70	K2	69
C12 A	70	H5	69	M1	69
C13 B	70	H6	69	P1	69
C15 D	70	H7	69	S5	71
C26	70	H8	69	T16	69
D1	68	I9	69	T19	71
D7	70	I10	69	V1	73
E2	68	I11	69	V2	69
E5 A	70	I12	69	V4	69
E6 B	70	I13	69	V9	69
E7 C	70	I14	69	V10	73
E8 D	70	I15	69		

▭ : Relay Blocks

Code	See Page	Relay Blocks (Relay Block Location)
1	22	Engine Room R/B (Engine Compartment Left)

: Junction Block and Wire Harness Connector

Code	See Page	Junction Block and Wire Harness (Connector Location)
1A	24	Engine Room Main Wire and Engine Room J/B (Engine Compartment Left)
1B	24	Engine Room No 2 Wire and Engine Room J/B (Engine Compartment Left)
1D		
2A	28	Engine Room No 2 Wire and Cowl Side J/B LH (Left Kick Panel)
2B		
2C		
2D	28	Dash Wire and Cowl Side J/B LH (Left Kick Panel)
2E		
2K	28	Floor No 1 Wire and Cowl Side J/B LH (Left Kick Panel)
2Q	30	Instrument Panel Integration Wire and Cowl Side J/B LH (Left Kick Panel)
3B	40	Engine Room No 2 Wire and Cowl Side J/B RH (Right Kick Panel)
3C		
3D	40	Dash Wire and Cowl Side J/B RH (Right Kick Panel)
3E		
3F		
3M	43	
3N		
3P		
3Q	42	Instrument Panel Integration Wire and Cowl Side J/B RH (Right Kick Panel)
4A	52	Dash Wire and J/B No 4 (Instrument Panel Center)
4C		
4D		
4E		
4F		
5B	56	Dash Wire and J/B No 5 (Behind the Combination Meter)
5C		
5D	56	Engine Room No 2 Wire and J/B No 5 (Behind the Combination Meter)
6B	60	Dash Wire and J/B No 6 (Behind the Grove Box)
6C		
6D	60	Engine Wire and J/B No 6 (Behind the Grove Box)
7B	64	Dash Wire and J/B No.7 (Behind the Grove Box)
7D	64	Engine Room No 2 Wire and J/B No.7 (Behind the Grove Box)

: Connector Joining Wire Harness and Wire Harness

Code	See Page	Joining Wire Harness and Wire Harness (Connector Location)
EB1	76	Engine Wire and Transmission Wire (On the Transmission)
EB3		
EC1	76	Engine No.2 Wire and Engine Wire (On the Transmission)
EE1	76	Engine Room Main Wire and Alternator Wire (Near the Battery)
IA2	78	Engine Room No 2 Wire and Floor No 1 Wire (Left Kick Panel)
ID4	78	Dash Wire and Floor No.1 Wire (Left Kick Panel)
IG1	78	Engine Room No 2 Wire and Dash Wire (Behind the Combination Meter)
IG4		
IN2	80	Engine Wire and Dash Wire (Behind the Glove Box)
IU1	82	Instrument Panel Integration Wire and Dash Wire (Behind the Glove Box)
IW3	82	Engine Room No 2 Wire and Dash Wire (Behind the Glove Box)
IX1	82	Instrument Panel Integration Wire and Engine Wire (Behind the Glove Box)
IX2		
Ib2	84	Dash Wire and Dash Wire (Behind the Combination Meter)
Id1	84	Dash Wire and Dash Wire (Instrument Panel Center)
Id3		
If1	84	Engine Wire and Engine Wire (Behind the Glove Box)
BB1	86	Floor No 1 Wire and Fuel Tank Wire (Near the Fuel Tank)
BD3	86	Floor No.3 Wire and Floor No 1 Wire (Left Rear Side Quarter Panel)

: Ground Points

Code	See Page	Ground Points Location
EA	76	Front Right Side of Fender Apron
EB		
EC	76	Rear Bank of Right Cylinder Head
EE	76	Front Left Side of Fender Apron
IF	78	Set Bolt of Cowl Side J/B LH
II	78	Set Bolt of Cowl Side J/B RH

: Splice Points

Code	See Page	Wire Harness with Splice Points	Code	See Page	Wire Harness with Splice Points
E4	76	Engine Room No.2 Wire	E11	76	Engine Wire
E5			E13	76	Engine Room No.2 Wire
E8	76	Transmission Wire	E14		
E10	76	Engine Wire	E16		

Engine Immobiliser System

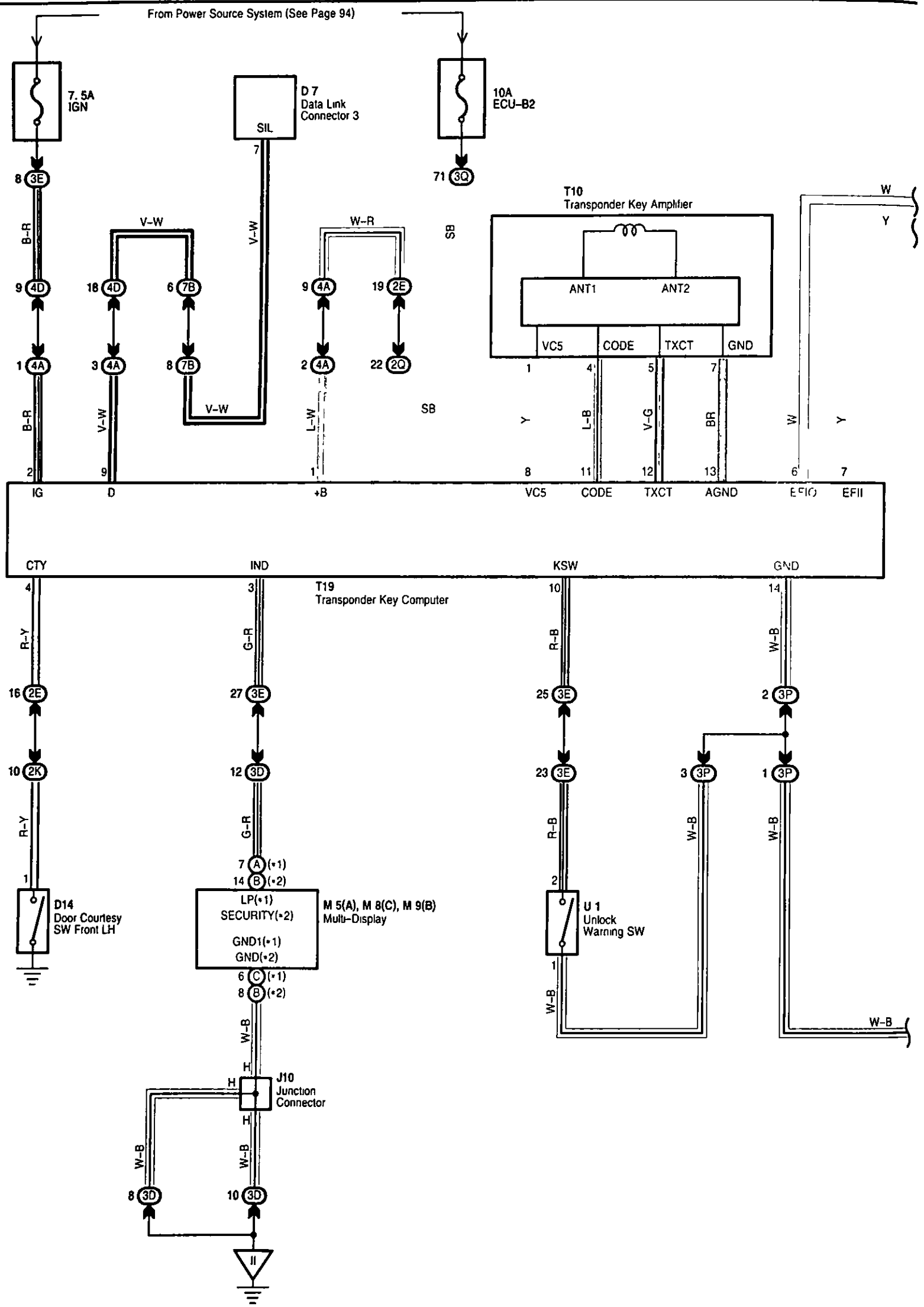

• 1 w/ Navigation System
• 2 w/o Navigation System

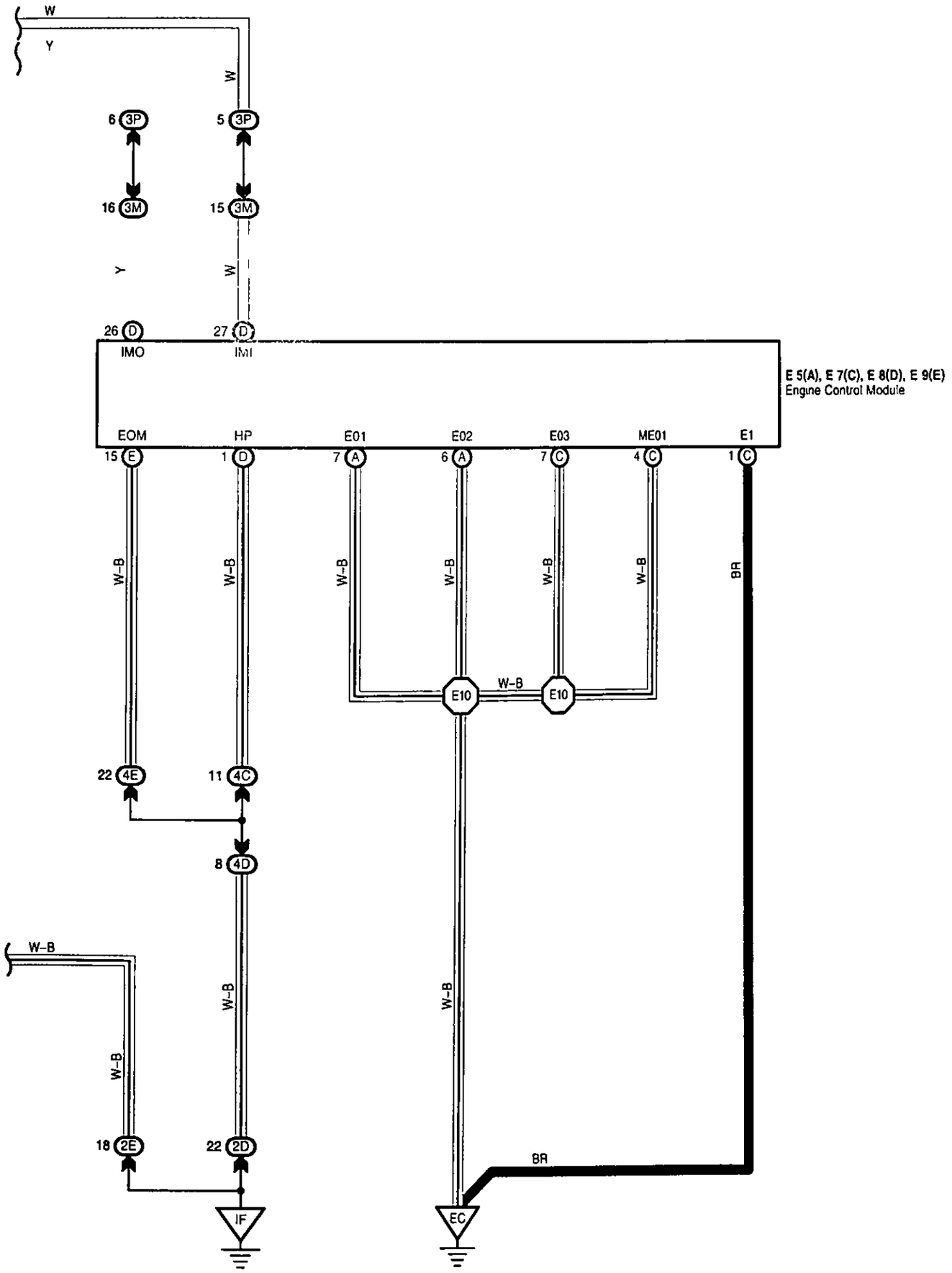

Engine Immobiliser System

Service Hints

T19 Transponder Key Computer

1-Ground : Always approx. 12 volts
2-Ground : Approx. 12 volts with ignition SW at ON or ST position
14-Ground : Always continuity

○ : Parts Location

Code		See Page	Code		See Page	Code	See Page
D7		70	E9	E	70	T10	71
D14		72	J10		71	T19	71
E5	A	70	M5	A	71	U1	71
E7	C	70	M8	C	71		
E8	D	70	M9	B	71		

▭ : Junction Block and Wire Harness Connector

Code	See Page	Junction Block and Wire Harness (Connector Location)
2D	28	Dash Wire and Cowl Side J/B LH (Left Kick Panel)
2E		
2K	28	Floor No 1 Wire and Cowl Side J/B LH (Left Kick Panel)
2Q	30	Instrument Panel Integration Wire and Cowl Side J/B LH (Left Kick Panel)
3D	40	Dash Wire and Cowl Side J/B RH (Right Kick Panel)
3E		
3M	43	
3P		
3Q	42	Instrument Panel Integration Wire and Cowl Side J/B RH (Right Kick Panel)
4A	52	Dash Wire and J/B No 4 (Instrument Panel Center)
4C		
4D		
4E		
7B	64	Dash Wire and J/B No.7 (Behind the Grove Box)

▽ : Ground Points

Code	See Page	Ground Points Location
EC	76	Rear Bank of Right Cylinder Head
IF	78	Set Bolt of Cowl Side J/B LH
II	78	Set Bolt of Cowl Side J/B RH

⬡ : Splice Points

Code	See Page	Wire Harness with Splice Points	Code	See Page	Wire Harness with Splice Points
E10	76	Engine Wire			

Headlight

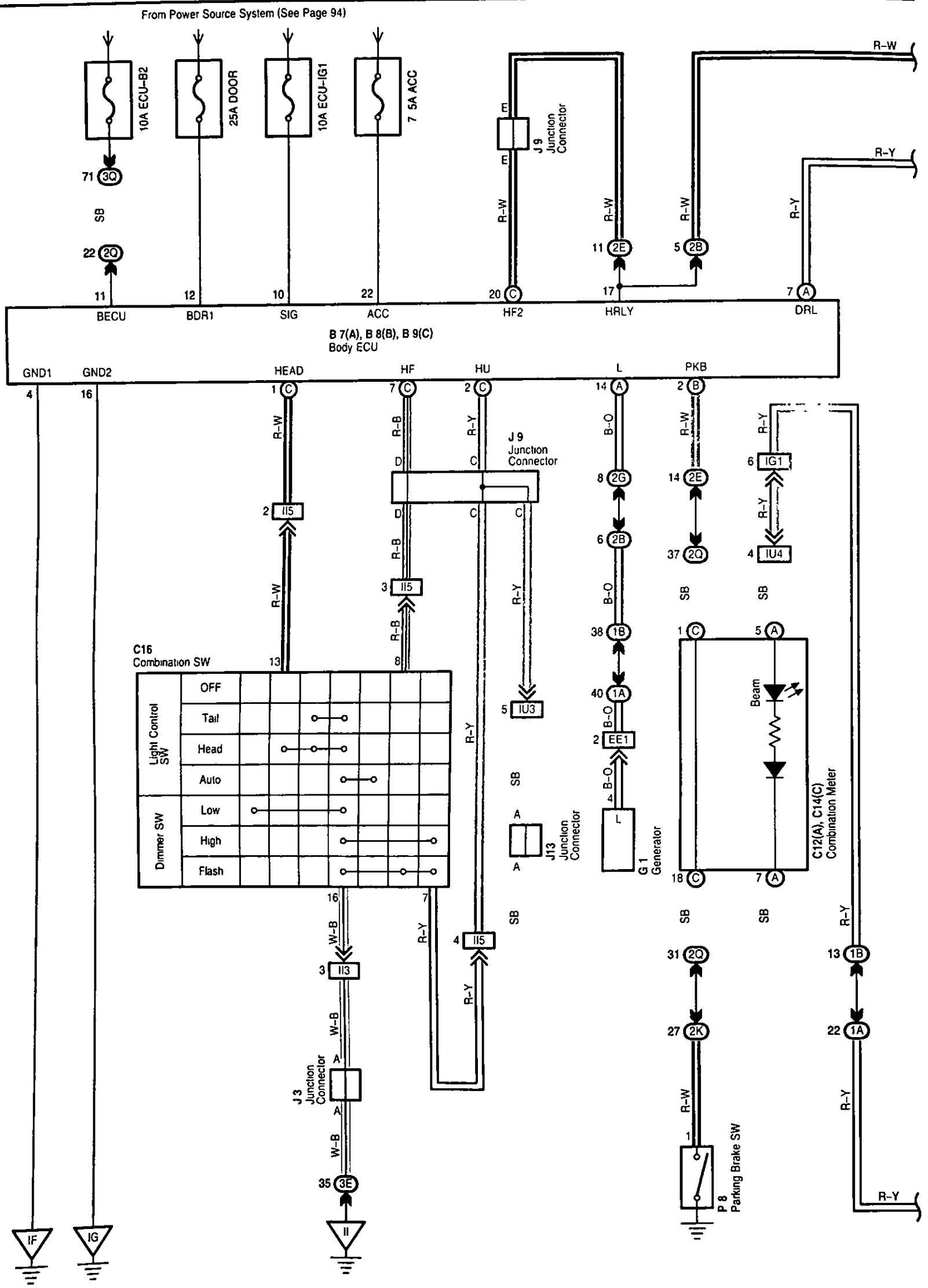
From Power Source System (See Page 94)
10A ECU-B2
25A DOOR
10A ECU-IG1
7.5A ACC
71 3Q
SB
22 2Q
11 BECU
12 BDR1
10 SIG
22 ACC
J9 Junction Connector
E
E
R-W
20 C HF2
11 2E HRLY
5 2B
R-W
R-Y
7 A DRL
B 7(A), B 8(B), B 9(C)
Body ECU
GND1
GND2
HEAD
HF
HU
L
PKB
4
16
1 C
R-W
2 II5
7 C
R-B
D
2 C
R-Y
C
J9 Junction Connector
14 A
B-O
8 2G
6 2B
38 1B
40 1A
B-O
2 EE1
B-O
4 L
G1 Generator
2 B
R-W
14 2E
37 2Q
SB
1 C
18 C
6 IG1
R-Y
4 IU4
SB
5 A
7 A
C12(A), C14(C) Combination Meter
Beam
C16
Combination SW
13
8
Light Control SW
OFF
Tail
Head
Auto
Dimmer SW
Low
High
Flash
16
7
W-B
3 II3
W-B
A
J3 Junction Connector
A
W-B
35 3E
II
IF
IG
R-Y
4 II5
R-Y
5 IU3
SB
A
A
J13 Junction Connector
SB
31 2Q
27 2K
R-W
1
P8 Parking Brake SW
13 1B
22 1A
R-Y
R-Y

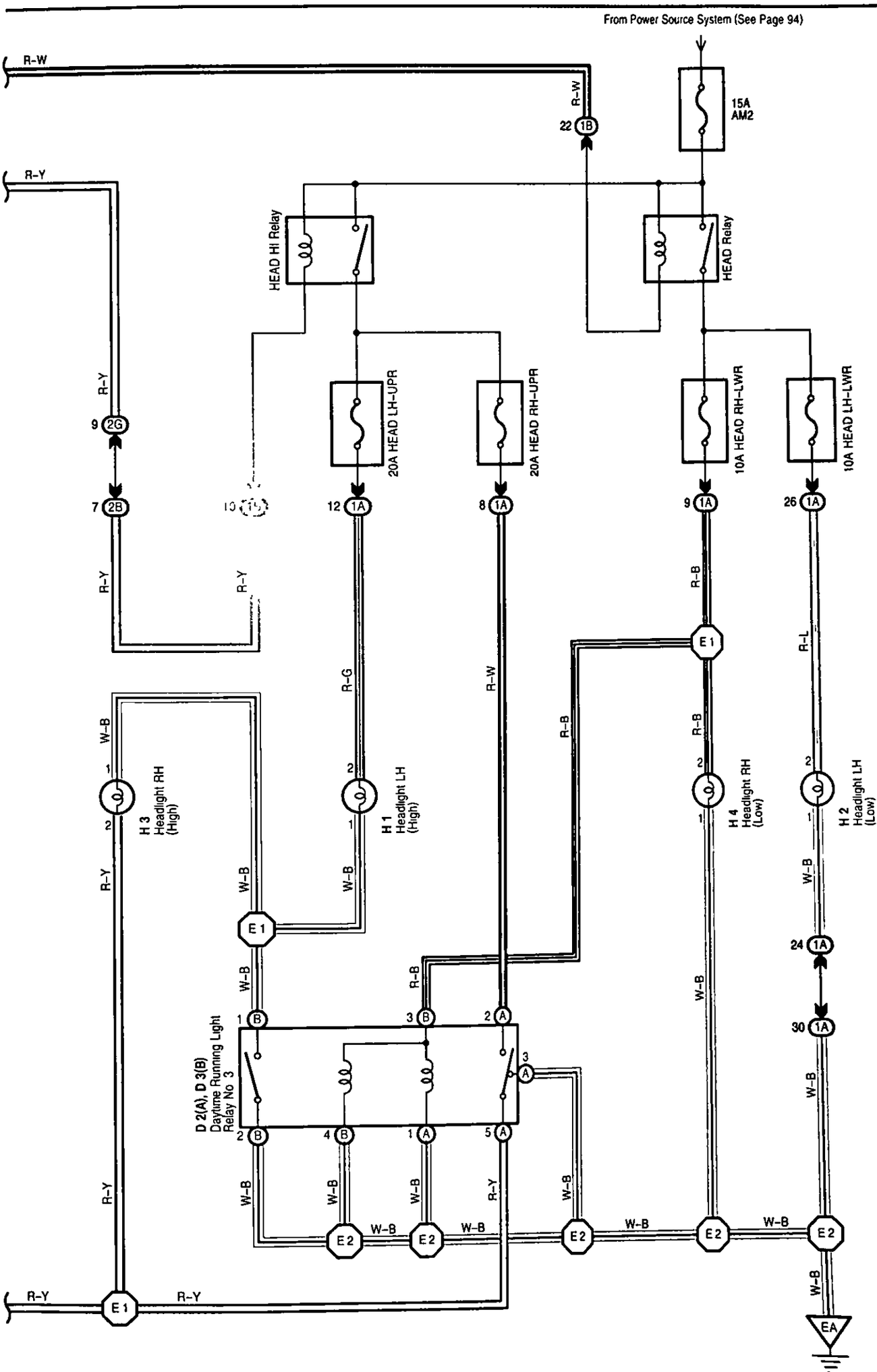
From Power Source System (See Page 94)
R-W
22 1B
15A AM2
R-Y
HEAD HI Relay
HEAD Relay
20A HEAD LH-UPR
20A HEAD RH-UPR
10A HEAD RH-LWR
10A HEAD LH-LWR
9 2G
7 2B
12 1A
8 1A
9 1A
26 1A
R-G
R-W
R-B
R-L
E1
W-B
H3 Headlight RH (High)
H1 Headlight LH (High)
H4 Headlight RH (Low)
H2 Headlight LH (Low)
24 1A
30 1A
D 2(A), D 3(B) Daytime Running Light Relay No 3
E2
EA

Headlight

System Outline

Daytime Running Light Operation

When the engine is started, a signal from the generator is input into TERMINAL (A) 14 of the body ECU. At this time, if the parking brake lever is pulled up (Parking brake SW ON), the body ECU is not activated, and the daytime running light system does not operate.

When the parking brake lever is released (Parking brake SW OFF), a signal is input into TERMINAL (C) 1 of the body ECU. This activates the body ECU and the headlight turns on.

Service Hints

C16 Combination SW

13-16 : Closed with light control SW at HEAD position
8-16 : Closed with dimmer SW at FLASH position
7-16 : Closed with dimmer SW at HIGH or FLASH position

○ : Parts Location

Code		See Page	Code		See Page	Code	See Page
B7	A	70	D2	A	68	H4	69
B8	B	70	D3	B	68	J3	71
B9	C	70	G1		68	J9	71
C12	A	70	H1		69	J13	71
C14	C	70	H2		69	P8	73
C16		70	H3		69		

⬭ : Junction Block and Wire Harness Connector

Code	See Page	Junction Block and Wire Harness (Connector Location)
1A	24	Engine Room Main Wire and Engine Room J/B (Engine Compartment Left)
1B	24	Engine Room No 2 Wire and Engine Room J/B (Engine Compartment Left)
2B	28	Engine Room No 2 Wire and Cowl Side J/B LH (Left Kick Panel)
2E	28	Dash Wire and Cowl Side J/B LH (Left Kick Panel)
2G		
2K	28	Floor No 1 Wire and Cowl Side J/B LH (Left Kick Panel)
2Q	30	Instrument Panel Integration Wire and Cowl Side J/B LH (Left Kick Panel)
3E	40	Dash Wire and Cowl Side J/B RH (Right Kick Panel)
3Q	42	Instrument Panel Integration Wire and Cowl Side J/B RH (Right Kick Panel)

□ : Connector Joining Wire Harness and Wire Harness

Code	See Page	Joining Wire Harness and Wire Harness (Connector Location)
EE1	76	Engine Room Main Wire and Alternator Wire (Near the Battery)
IG1	78	Engine Room No 2 Wire and Dash Wire (Behind the Combination Meter)
II3	80	Dash Wire and Column Wire (Near the Ignition SW)
II5		
IU3	82	Instrument Panel Integration Wire and Dash Wire (Behind the Glove Box)
IU4		

▽ : Ground Points

Code	See Page	Ground Points Location
EA	76	Front Right Side of Fender Apron
IF	78	Set Bolt of Cowl Side J/B LH
IG		
II	78	Set Bolt of Cowl Side J/B RH

⬡ : Splice Points

Code	See Page	Wire Harness with Splice Points	Code	See Page	Wire Harness with Splice Points
E1	76	Engine Room Main Wire	E2	76	Engine Room Main Wire

Front Fog Light

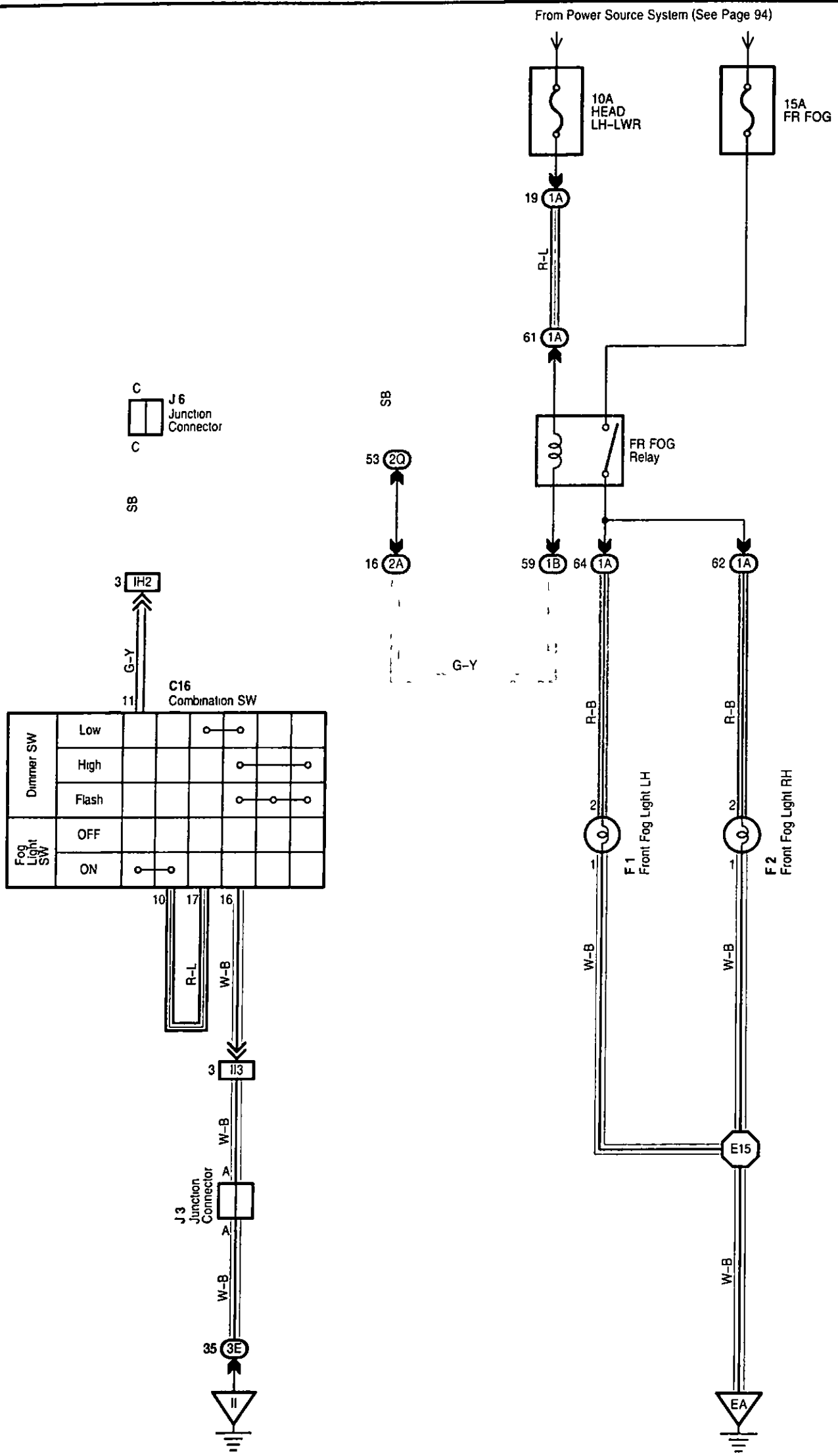

Service Hints

C16 Combination SW

11-Ground : Continuity with light control SW at HEAD position, dimmer SW at LOW position and fog light SW at ON position

: Parts Location

Code	See Page	Code	See Page	Code	See Page
C16	70	F2	68	J6	71
F1	68	J3	71		

: Junction Block and Wire Harness Connector

Code	See Page	Junction Block and Wire Harness (Connector Location)
1A	24	Engine Room Main Wire and Engine Room J/B (Engine Compartment Left)
1B	24	Engine Room No 2 Wire and Engine Room J/B (Engine Compartment Left)
2A	28	Engine Room No 2 Wire and Cowl Side J/B LH (Left Kick Panel)
2Q	30	Instrument Panel Integration Wire and Cowl Side J/B LH (Left Kick Panel)
3E	40	Dash Wire and Cowl Side J/B RH (Right Kick Panel)

: Connector Joining Wire Harness and Wire Harness

Code	See Page	Joining Wire Harness and Wire Harness (Connector Location)
IH2	80	Instrument Panel Integration Wire and Column Wire (Near the Ignition SW)
II3	80	Dash Wire and Column Wire (Near the Ignition SW)

: Ground Points

Code	See Page	Ground Points Location
EA	76	Front Right Side of Fender Apron
II	78	Set Bolt of Cowl Side J/B RH

: Splice Points

Code	See Page	Wire Harness with Splice Points	Code	See Page	Wire Harness with Splice Points
E15	76	Engine Room Main Wire			

Turn Signal and Hazard Warning Light

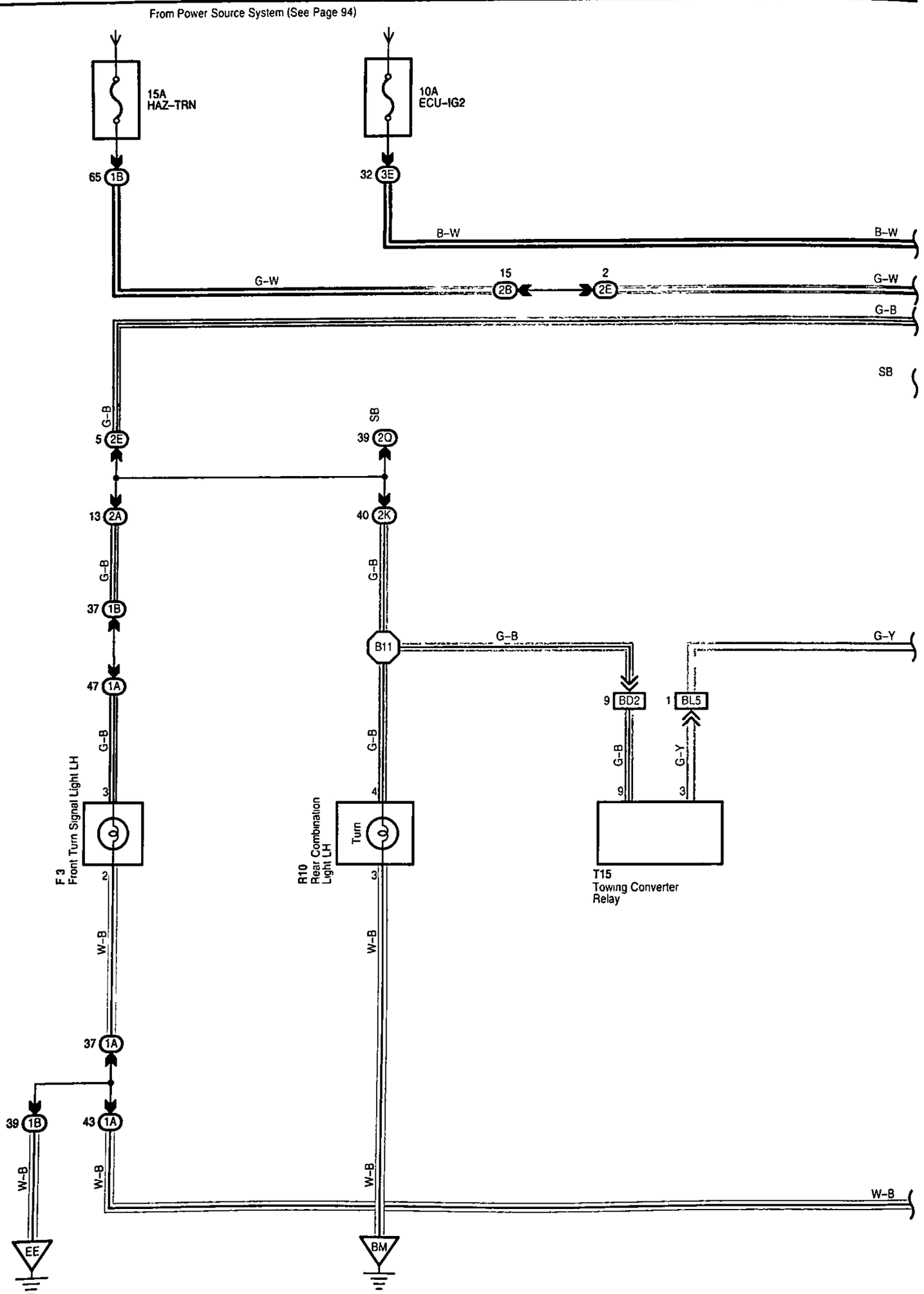

*1 w/ Navigation System
*2 w/o Navigation System

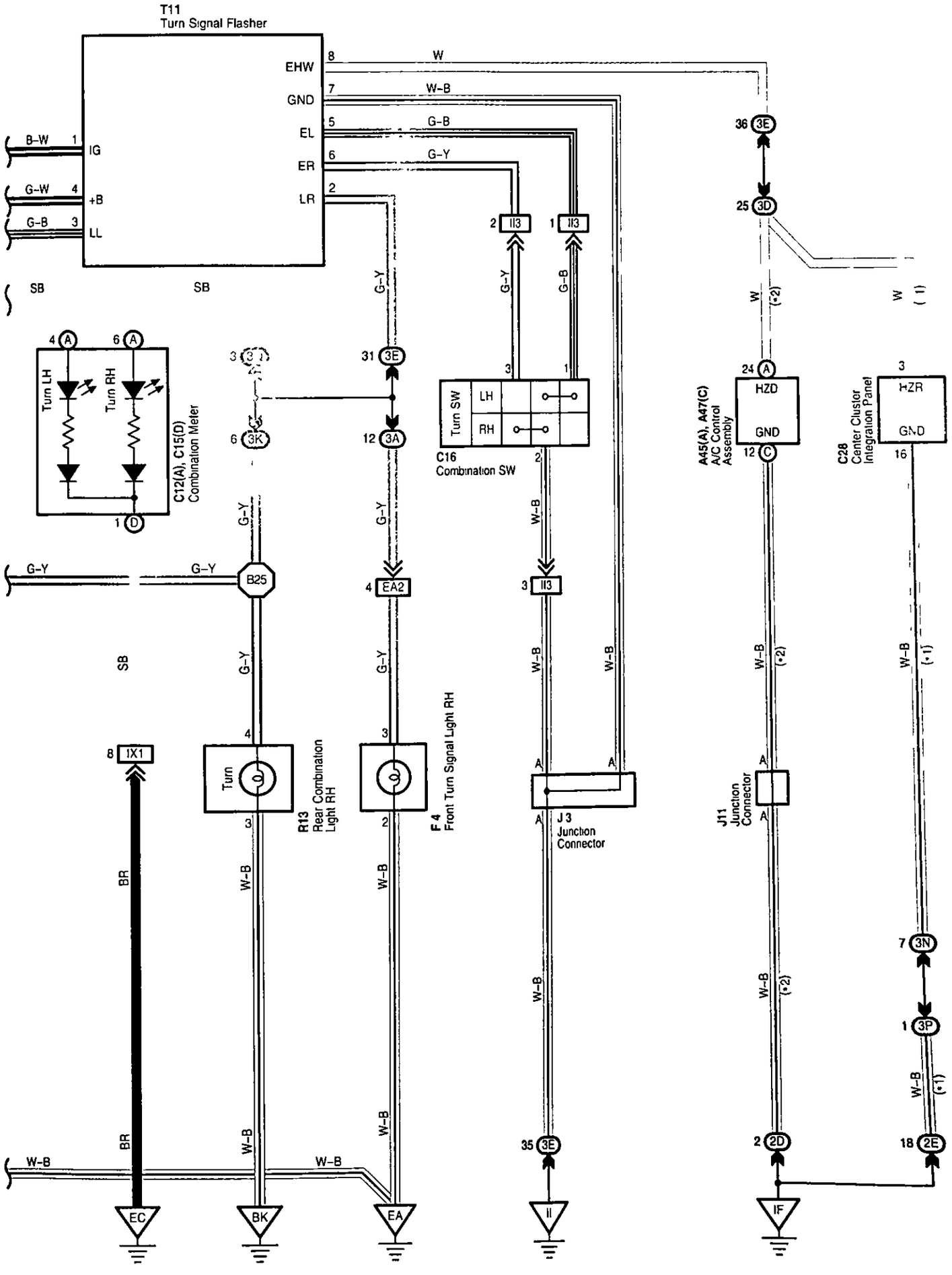

Turn Signal and Hazard Warning Light

Service Hints

T11 Turn Signal Flasher

4-Ground : Always approx. 12 volts
1-Ground : Approx. 12 volts with ignition SW at ON or ST position
7-Ground : Always continuity

○ : Parts Location

Code		See Page	Code	See Page	Code	See Page
A45	A	70	C28	70	R10	73
A47	C	70	F3	68	R13	73
C12	A	70	F4	68	T11	71
C15	D	70	J3	71	T15	73
C16		70	J11	71		

⬭ : Junction Block and Wire Harness Connector

Code	See Page	Junction Block and Wire Harness (Connector Location)
1A	24	Engine Room Main Wire and Engine Room J/B (Engine Compartment Left)
1B	24	Engine Room No 2 Wire and Engine Room J/B (Engine Compartment Left)
2A	28	Engine Room No 2 Wire and Cowl Side J/B LH (Left Kick Panel)
2B		
2D	28	Dash Wire and Cowl Side J/B LH (Left Kick Panel)
2E		
2K	28	Floor No.1 Wire and Cowl Side J/B LH (Left Kick Panel)
2Q	30	Instrument Panel Integration Wire and Cowl Side J/B LH (Left Kick Panel)
3A	40	Engine Room No 2 Wire and Cowl Side J/B RH (Right Kick Panel)
3D	40	Dash Wire and Cowl Side J/B RH (Right Kick Panel)
3E		
3K	40	Floor No 2 Wire and Cowl Side J/B RH (Right Kick Panel)
3N	43	Dash Wire and Cowl Side J/B RH (Right Kick Panel)
3P		
3Q	42	Instrument Panel Integration Wire and Cowl Side J/B RH (Right Kick Panel)

▭ : Connector Joining Wire Harness and Wire Harness

Code	See Page	Joining Wire Harness and Wire Harness (Connector Location)
EA2	76	Engine Room Main Wire and Engine Room No 2 Wire (Engine Compartment Right)
II3	80	Dash Wire and Column Wire (Near the Ignition SW)
IX1	82	Instrument Panel Integration Wire and Engine Wire (Behind the Glove Box)
BD2	86	Floor No.3 Wire and Floor No 1 Wire (Left Rear Side Quarter Panel)
BL5	88	Floor No.2 Wire and Floor No 3 Wire (Right Side of Rear Floor Crossmember)

▽ : Ground Points

Code	See Page	Ground Points Location
EA	76	Front Right Side of Fender Apron
EC	76	Rear Bank of Right Cylinder Head
EE	76	Front Left Side of Fender Apron
IF	78	Set Bolt of Cowl Side J/B LH
II	78	Set Bolt of Cowl Side J/B RH
BK	86	Front Side Under the Front Passenger's Seat
BM	86	Left Rear Side Quarter Panel

⬡ : Splice Points

Code	See Page	Wire Harness with Splice Points	Code	See Page	Wire Harness with Splice Points
B11	88	Floor No.1 Wire	B25	88	Floor No.2 Wire

Taillight

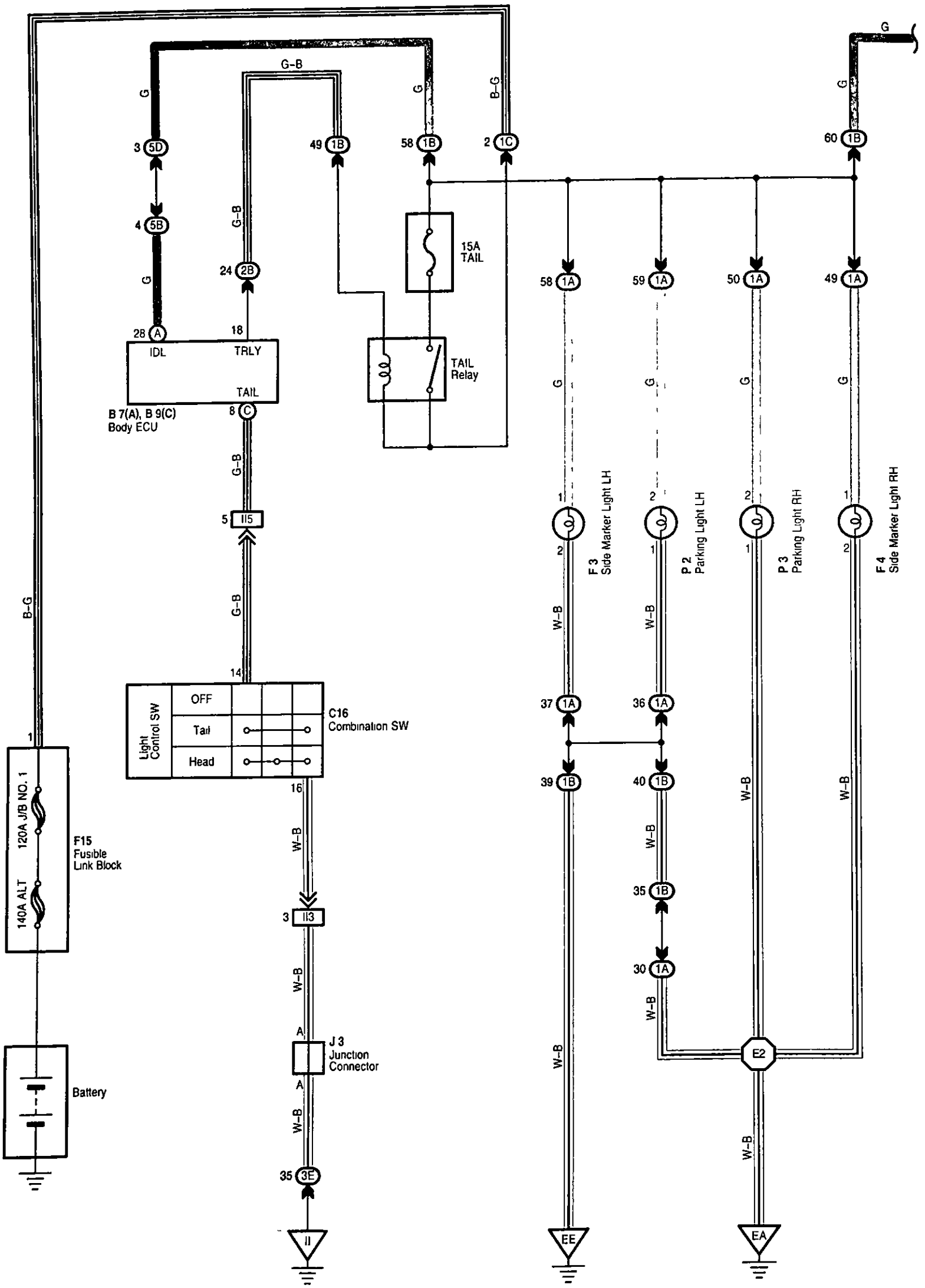
G
G-B
G
B-G
G
3 5D
49 1B
58 1B
2 1C
60 1B
4 5B
G-B
24 2B
15A TAIL
58 1A
59 1A
50 1A
49 1A
G
28 A
18
IDL
TRLY
TAIL
TAIL Relay
B 7(A), B 9(C) Body ECU
8 C
G-B
5 II5
1
2
F 3 Side Marker Light LH
P 2 Parking Light LH
P 3 Parking Light RH
F 4 Side Marker Light RH
B-G
G-B
14
OFF
Tail
Head
Light Control SW
C16 Combination SW
W-B
16
1
120A J/B NO. 1
140A ALT
F15 Fusible Link Block
3 II3
W-B
A
J 3 Junction Connector
A
Battery
W-B
35 3E
II
37 1A
36 1A
39 1B
40 1B
35 1B
30 1A
W-B
E2
EE
EA

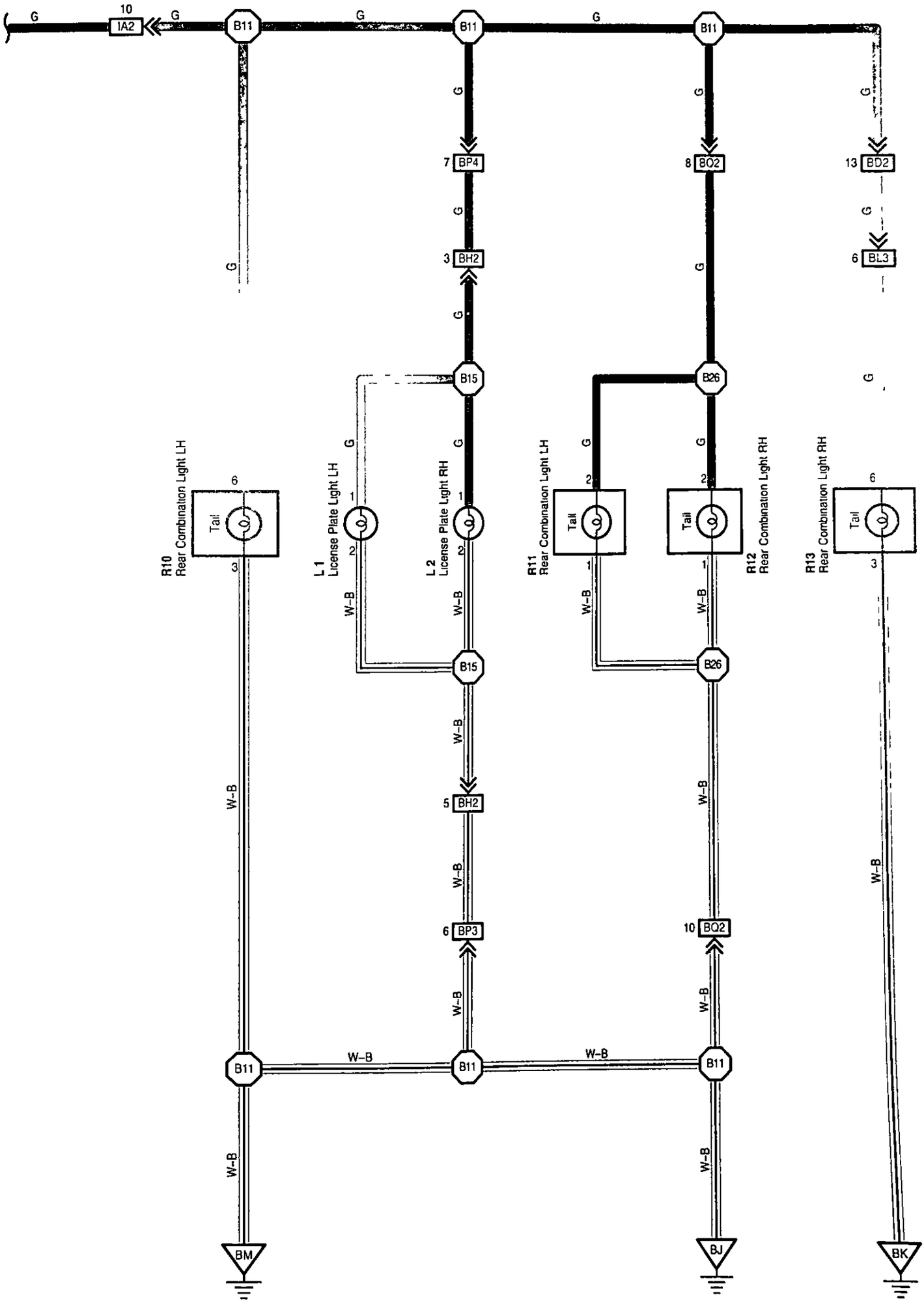

IA2
B11
BP4
BH2
BO2
BD2
BL3
B15
B26
R10
Rear Combination Light LH
Tail
L 1
License Plate Light LH
L 2
License Plate Light RH
R11
Rear Combination Light LH
R12
Rear Combination Light RH
R13
Rear Combination Light RH
BP3
BQ2
BM
BJ
BK
W-B
G

Taillight

Service Hints

C16 Combination SW

14-16 : Closed with light control SW at TAIL or HEAD position

○ : **Parts Location**

Code		See Page	Code	See Page	Code	See Page
B7	A	70	F15	68	P3	69
B9	C	70	J3	71	R10	73
C16		70	L1	72	R11	73
F3		68	L2	72	R12	73
F4		68	P2	69	R13	73

⬭ : **Junction Block and Wire Harness Connector**

Code	See Page	Junction Block and Wire Harness (Connector Location)
1A	24	Engine Room Main Wire and Engine Room J/B (Engine Compartment Left)
1B	24	Engine Room No.2 Wire and Engine Room J/B (Engine Compartment Left)
1C		
2B	28	Engine Room No 2 Wire and Cowl Side J/B LH (Left Kick Panel)
3E	40	Dash Wire and Cowl Side J/B RH (Right Kick Panel)
5B	56	Dash Wire and J/B No 5 (Behind the Combination Meter)
5D	56	Engine Room No 2 Wire and J/B No 5 (Behind the Combination Meter)

□ : **Connector Joining Wire Harness and Wire Harness**

Code	See Page	Joining Wire Harness and Wire Harness (Connector Location)
IA2	78	Engine Room No 2 Wire and Floor No 1 Wire (Left Kick Panel)
II3	80	Dash Wire and Column Wire (Near the Ignition SW)
II5		
BD2	86	Floor No.3 Wire and Floor No 1 Wire (Left Rear Side Quarter Panel)
BH2	86	Pillar No 1 Wire and Back Door Upper Wire (Left Side of Back Door)
BL3	88	Floor No.2 Wire and Floor No 3 Wire (Right Side of Rear Floor Crossmember)
BP3	88	Pillar No.1 Wire and Floor No.1 Wire (Left Rear Side Quarter Panel)
BP4		
BQ2	88	Back Door Lower Wire and Floor No.1 Wire (Left Rear Side Quarter Panel)

▽ : **Ground Points**

Code	See Page	Ground Points Location
EA	76	Front Right Side of Fender Apron
EE	76	Front Left Side of Fender Apron
II	78	Set Bolt of Cowl Side J/B RH
BJ	86	Under the Driver's Seat
BK	86	Front Side Under the Front Passenger's Seat
BM	86	Left Rear Side Quarter Panel

⬡ : **Splice Points**

Code	See Page	Wire Harness with Splice Points	Code	See Page	Wire Harness with Splice Points
E2	76	Engine Room Main Wire	B15	88	Back Door Upper Wire
B11	88	Floor No.1 Wire	B26	88	Back Door Lower Wire

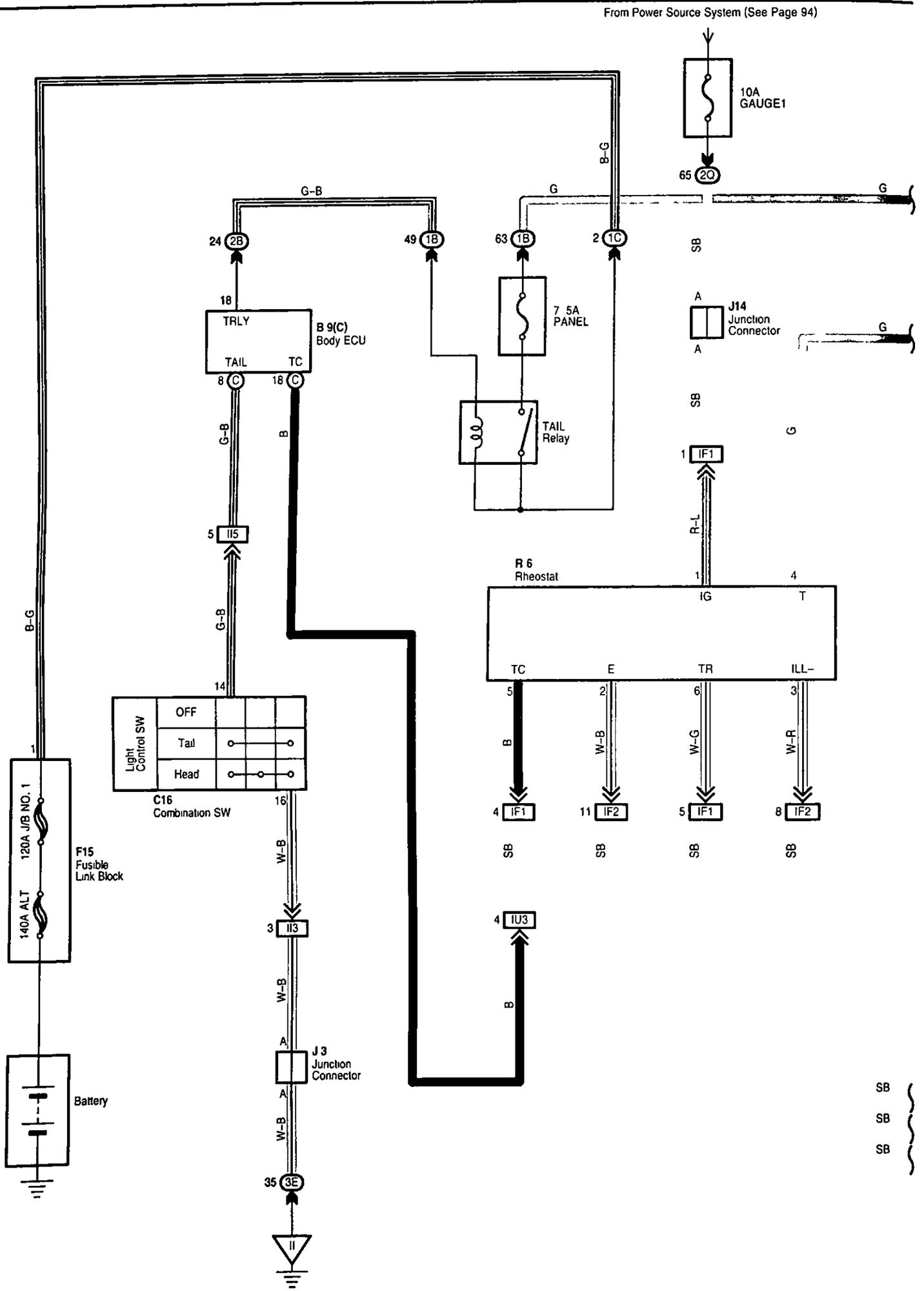
From Power Source System (See Page 94)
10A
GAUGE1
65 2Q
B-G
G-B
G
24 2B
49 1B
63 1B
2 1C
SB
18
TRLY
B 9(C)
Body ECU
TAIL
TC
8 C
18 C
7 5A
PANEL
A
J14
Junction
Connector
A
G
SB
TAIL
Relay
G
1 IF1
R-L
R 6
Rheostat
1
4
IG
T
TC
E
TR
ILL-
5
2
6
3
B
W-B
W-G
W-R
4 IF1
11 IF2
5 IF1
8 IF2
SB
SB
SB
SB
G-B
B
5 II5
G-B
14
Light
Control SW
OFF
Tail
Head
C16
Combination SW
16
W-B
3 II3
4 IU3
B
W-B
A
J 3
Junction
Connector
A
W-B
35 3E
II
1
B-G
120A J/B NO. 1
140A ALT
F15
Fusible
Link Block
Battery
SB
SB
SB

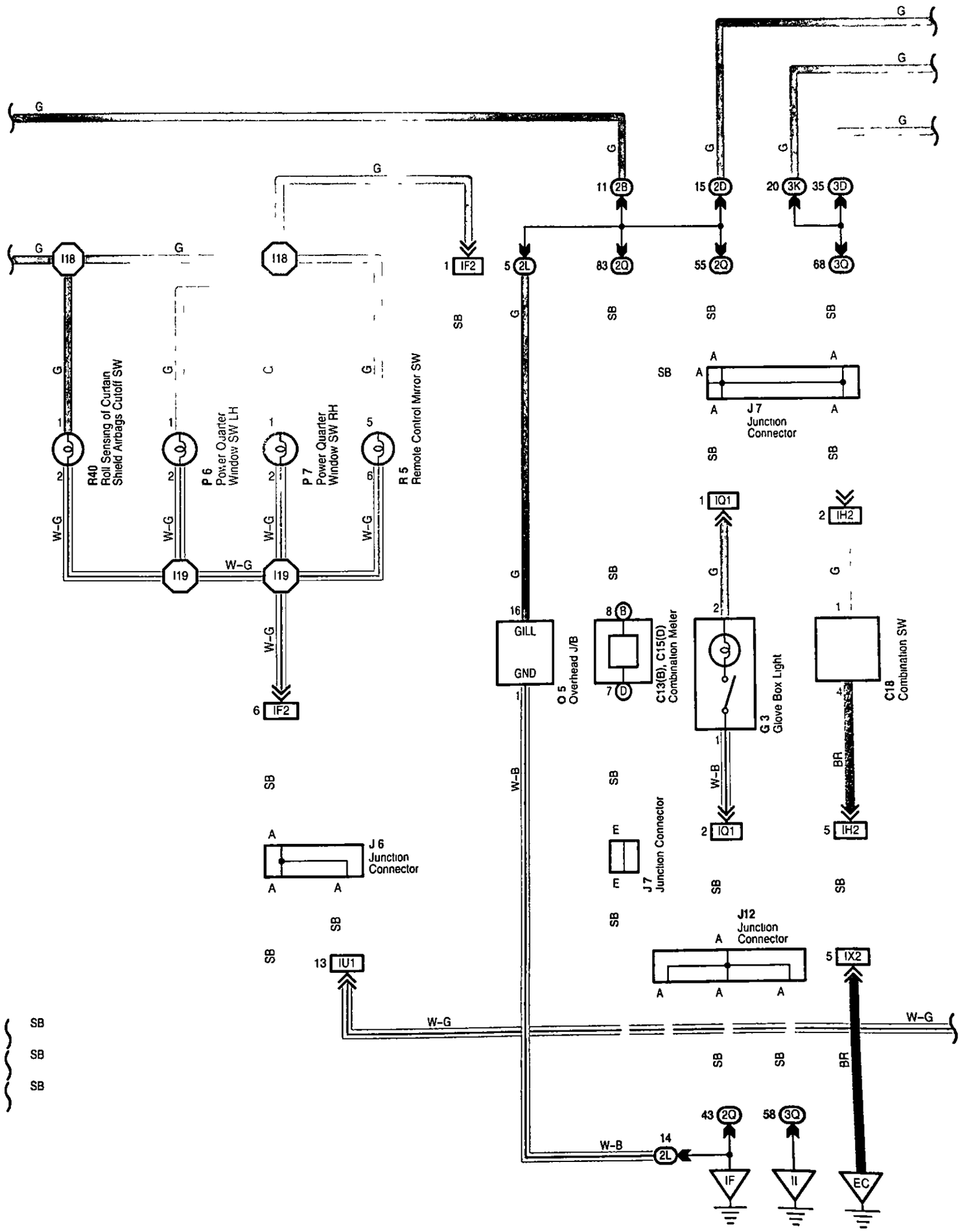
R40
Roll Sensing of Curtain Shield Airbags Cutoff SW
P6
Power Quarter Window SW LH
P7
Power Quarter Window SW RH
R5
Remote Control Mirror SW
J6
Junction Connector
J7
Junction Connector
J12
Junction Connector
O5
Overhead J/B
C13(B), C15(D)
Combination Meter
G3
Glove Box Light
C18
Combination SW
GILL
GND
I18
I19
IF2
IU1
IQ1
IH2
IX2
2B
2D
3K
3D
2L
2Q
3Q
IF
II
EC
W-G
W-B
SB
BR

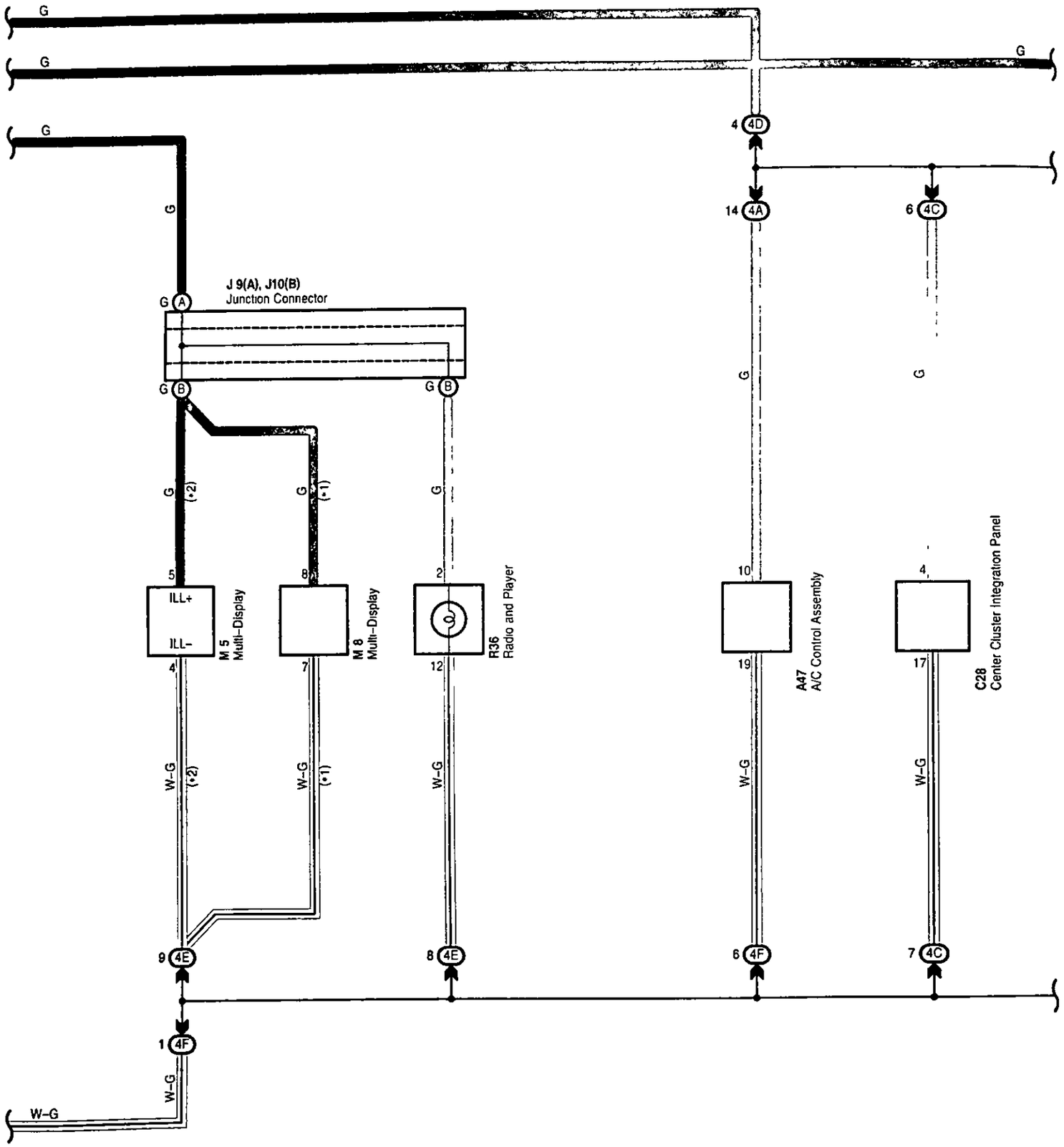
G
G
G
G
4 4D
14 4A
6 4C
G A
J 9(A), J10(B)
Junction Connector
G B
G B
G
G
G (*2)
G (*1)
G
5
8
2
ILL+
ILL-
M 5
Multi-Display
M 8
Multi-Display
R36
Radio and Player
10
A47
A/C Control Assembly
4
C28
Center Cluster Integration Panel
4
7
12
19
17
W-G
(*2)
W-G
(*1)
W-G
W-G
W-G
9 4E
8 4E
6 4F
7 4C
1 4F
W-G
W-G

• 1 w/ Navigation System
• 2 w/o Navigation System

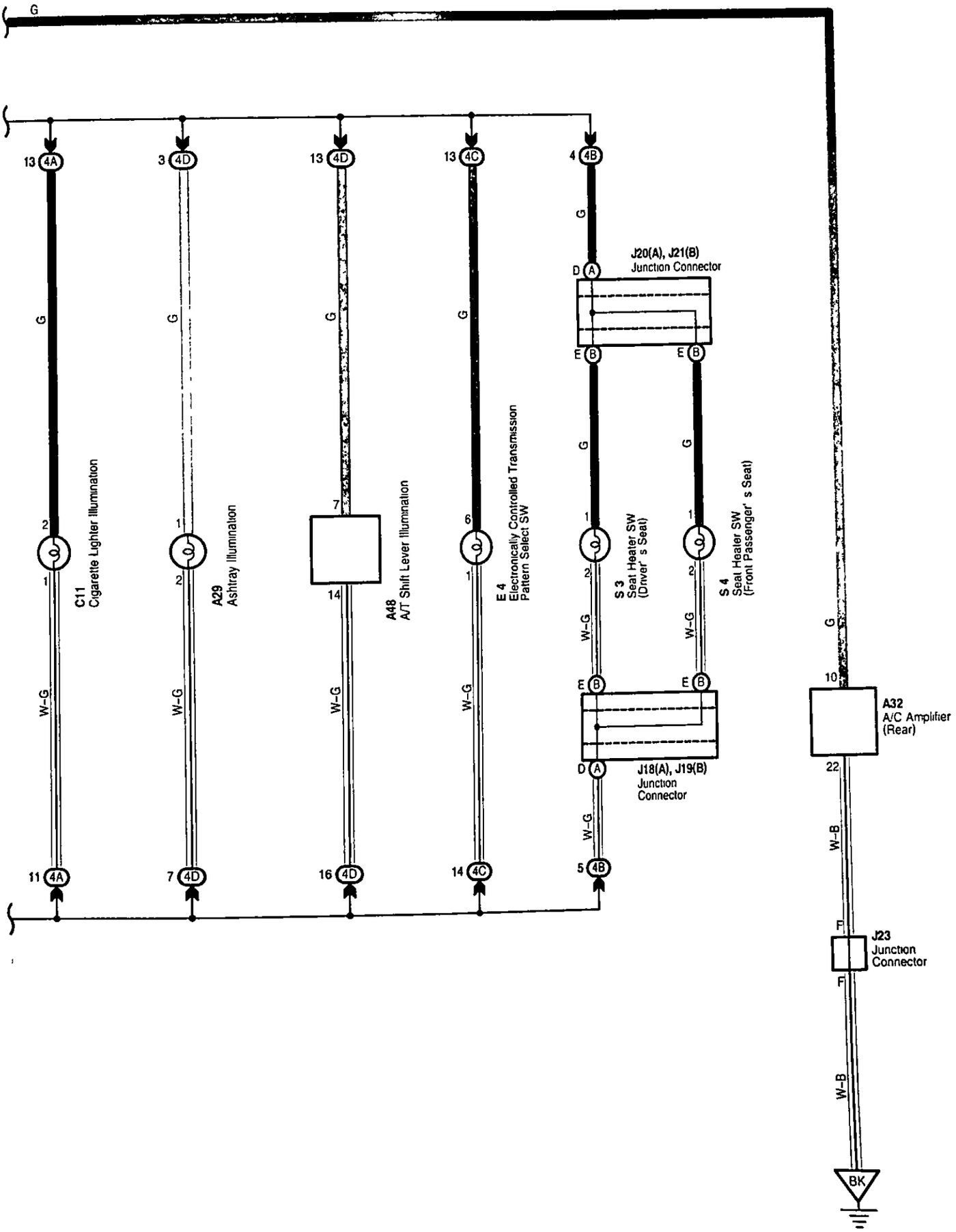

Illumination

Service Hints

C16 Combination SW

14-16 · Closed with light control SW at TAIL or HEAD position

○ : Parts Location

Code	See Page	Code	See Page	Code	See Page
A29	70	G3	70	M5	71
A32	72	J3	71	M8	71
A47	70	J6	71	O5	72
A48	70	J7	71	P6	71
B9 C	70	J9 A	71	P7	71
C11	70	J10 B	71	R5	71
C13 B	70	J12	71	R6	71
C15 D	70	J14	71	R36	71
C16	70	J18 A	71	R40	71
C18	70	J19 B	71	S3	71
C28	70	J20 A	71	S4	71
E4	70	J21 B	71		
F15	68	J23	72		

⬭ : Junction Block and Wire Harness Connector

Code	See Page	Junction Block and Wire Harness (Connector Location)
1B	24	Engine Room No 2 Wire and Engine Room J/B (Engine Compartment Left)
1C		
2B	28	Engine Room No 2 Wire and Cowl Side J/B LH (Left Kick Panel)
2D	28	Dash Wire and Cowl Side J/B LH (Left Kick Panel)
2L	28	Roof No 1 Wire and Cowl Side J/B LH (Left Kick Panel)
2Q	30	Instrument Panel Integration Wire and Cowl Side J/B LH (Left Kick Panel)
3D	40	Dash Wire and Cowl Side J/B RH (Right Kick Panel)
3E		
3K	40	Floor No 2 Wire and Cowl Side J/B RH (Right Kick Panel)
3Q	42	Instrument Panel Integration Wire and Cowl Side J/B RH (Right Kick Panel)
4A	52	Dash Wire and J/B No.4 (Instrument Panel Center)
4B		
4C		
4D		
4E		
4F		

□ : Connector Joining Wire Harness and Wire Harness

Code	See Page	Joining Wire Harness and Wire Harness (Connector Location)
IF1	78	Instrument Panel Integration Wire and Instrument Panel Wire (Left Side of Instrument Panel)
IF2		
IH2	80	Instrument Panel Integration Wire and Column Wire (Near the Ignition SW)
II3	80	Dash Wire and Column Wire (Near the Ignition SW)
II5		
IQ1	80	Instrument Panel Integration Wire and Lamp Wire (Behind the Glove Box)
IU1	82	Instrument Panel Integration Wire and Dash Wire (Behind the Glove Box)
IU3		
IX2	82	Instrument Panel Integration Wire and Engine Wire (Behind the Glove Box)

▽ : Ground Points

Code	See Page	Ground Points Location
EC	76	Rear Bank of Right Cylinder Head
IF	78	Set Bolt of Cowl Side J/B LH
II	78	Set Bolt of Cowl Side J/B RH
BK	86	Front Side Under the Front Passenger's Seat

○ : Splice Points

Code	See Page	Wire Harness with Splice Points	Code	See Page	Wire Harness with Splice Points
I18	80	Instrument Panel Wire	I19	80	Instrument Panel Wire

Interior Light

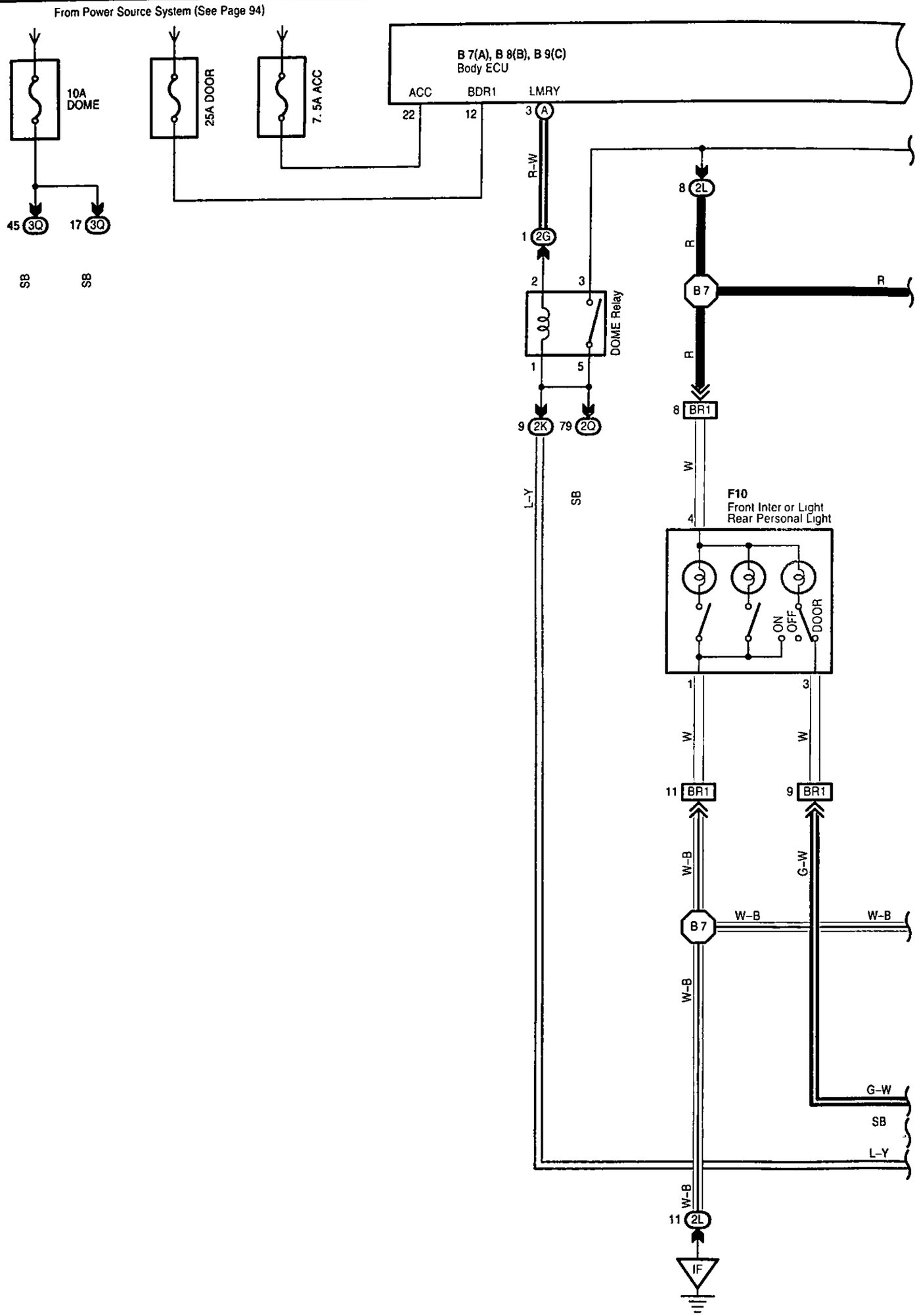

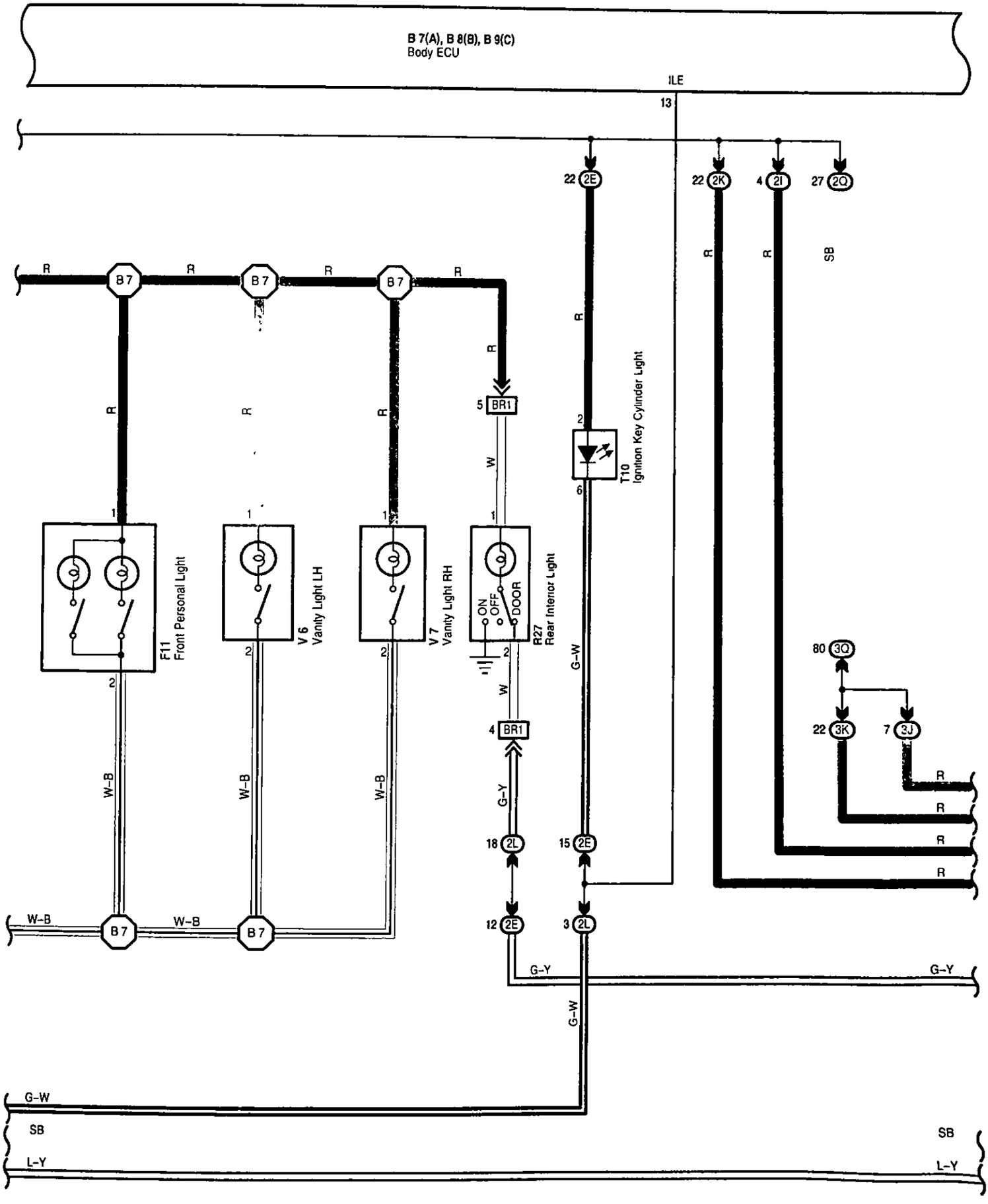
B 7(A), B 8(B), B 9(C)
Body ECU
ILE
13
22 2E
22 2K
4 2I
27 2Q
R
SB
B7
5 BR1
W
T10
Ignition Key Cylinder Light
F11
Front Personal Light
V 6
Vanity Light LH
V 7
Vanity Light RH
R27
Rear Interior Light
ON
OFF
DOOR
G-W
80 3Q
22 3K
7 3J
4 BR1
G-Y
18 2L
15 2E
12 2E
3 2L
W-B
G-Y
G-W
SB
L-Y

Interior Light

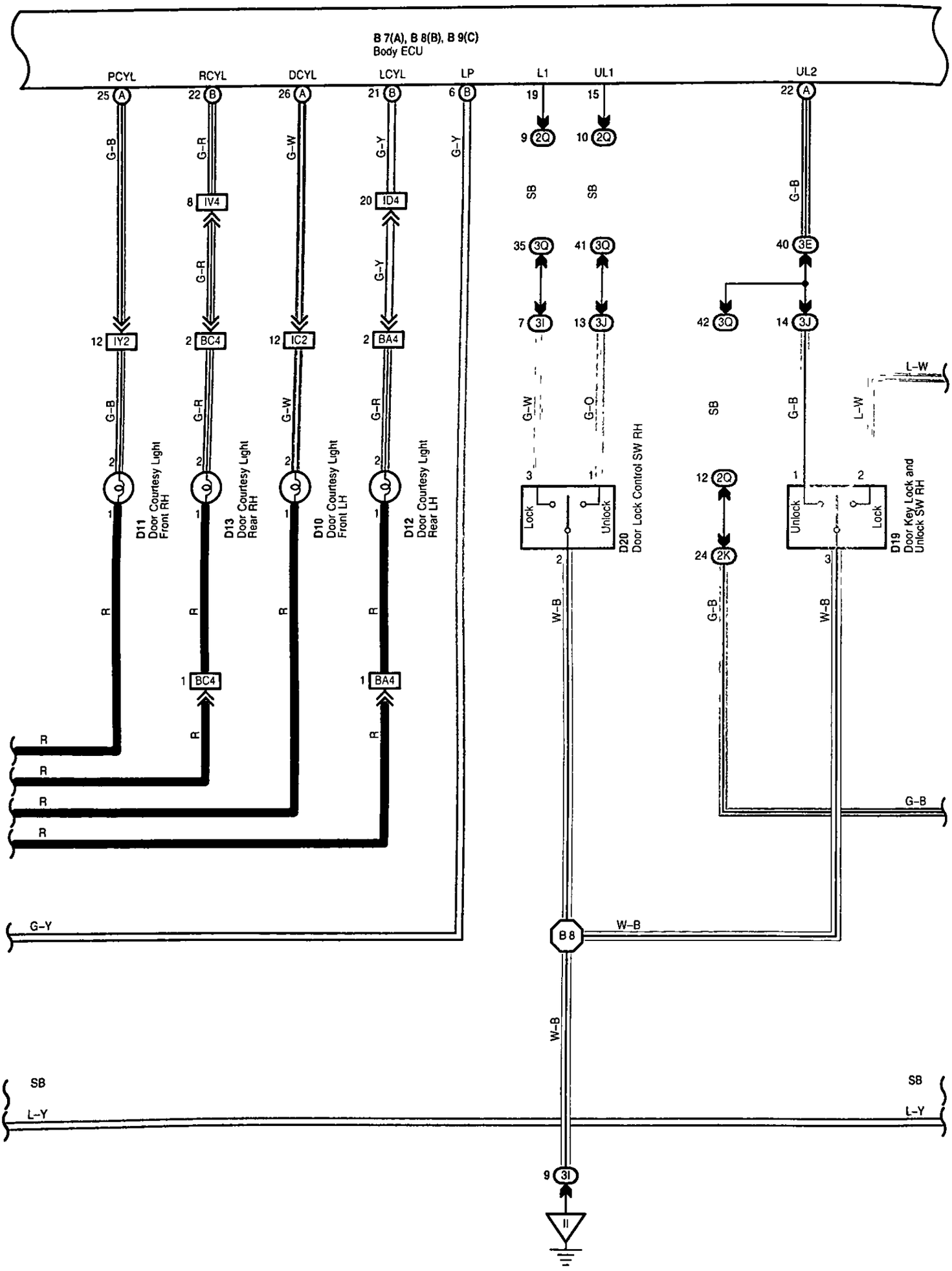

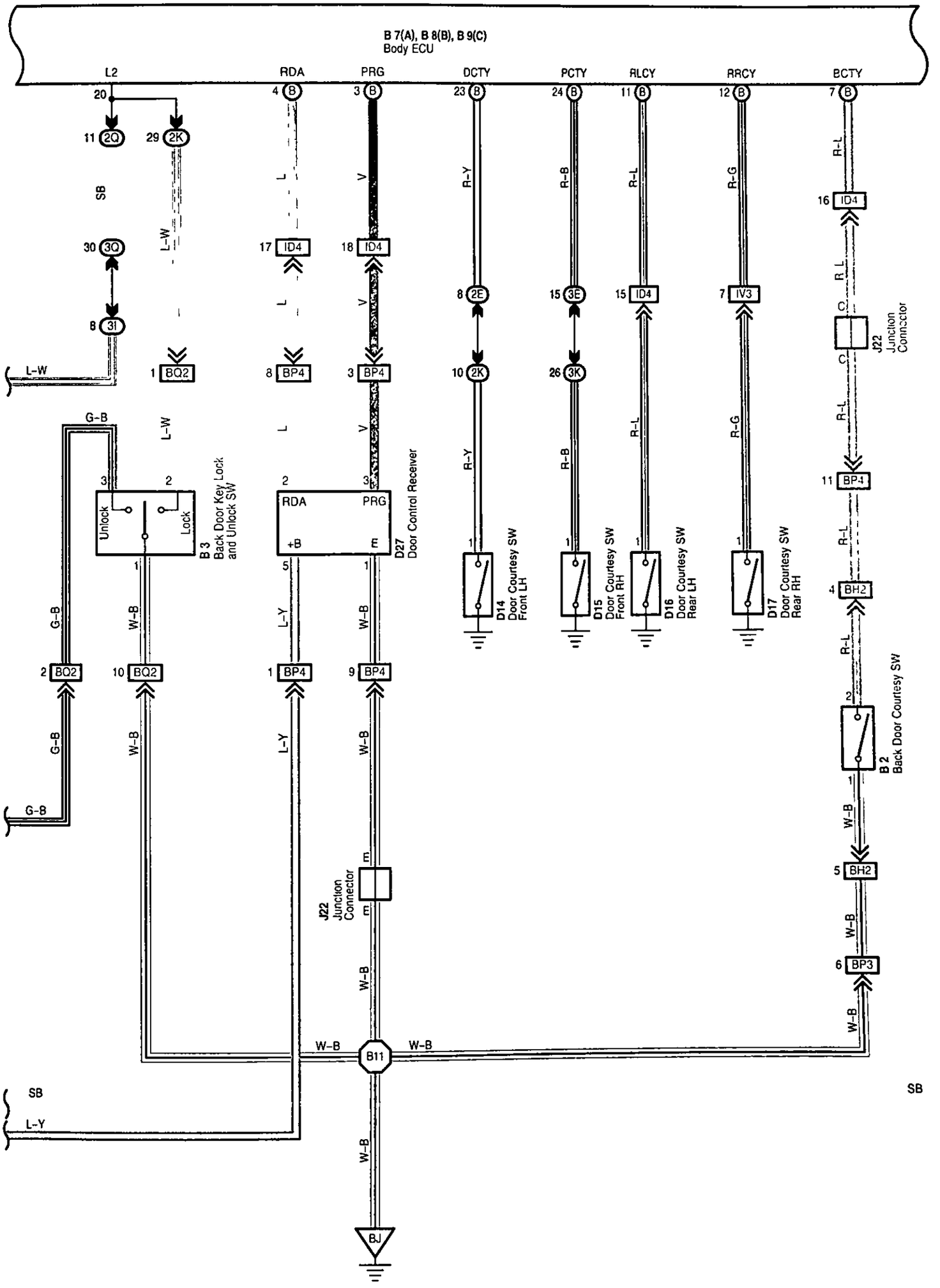
B 7(A), B 8(B), B 9(C)
Body ECU
L2
RDA
PRG
DCTY
PCTY
RLCY
RRCY
BCTY
20
11 2Q
29 2K
30 3Q
8 3I
1 BQ2
4 B
3 B
17 ID4
18 ID4
8 BP4
3 BP4
23 B
24 B
11 B
12 B
7 B
8 2E
15 3E
15 ID4
7 IV3
10 2K
26 3K
16 ID4
C
C
J22
Junction
Connector
11 BP4
4 BH2
2
B2
Back Door Courtesy SW
1
5 BH2
6 BP3
SB
L-W
G-B
L
V
R-Y
R-B
R-L
R-G
R L
W-B
L-Y
3
2
Unlock
Lock
B3
Back Door Key Lock
and Unlock SW
1
2 BQ2
10 BQ2
RDA
PRG
+B
E
5
1
1 BP4
9 BP4
D27
Door Control Receiver
D14
Door Courtesy SW
Front LH
D15
Door Courtesy SW
Front RH
D16
Door Courtesy SW
Rear LH
D17
Door Courtesy SW
Rear RH
E
E
J22
Junction
Connector
B11
BJ
SB
L-Y
W-B
W-B
SB

Interior Light

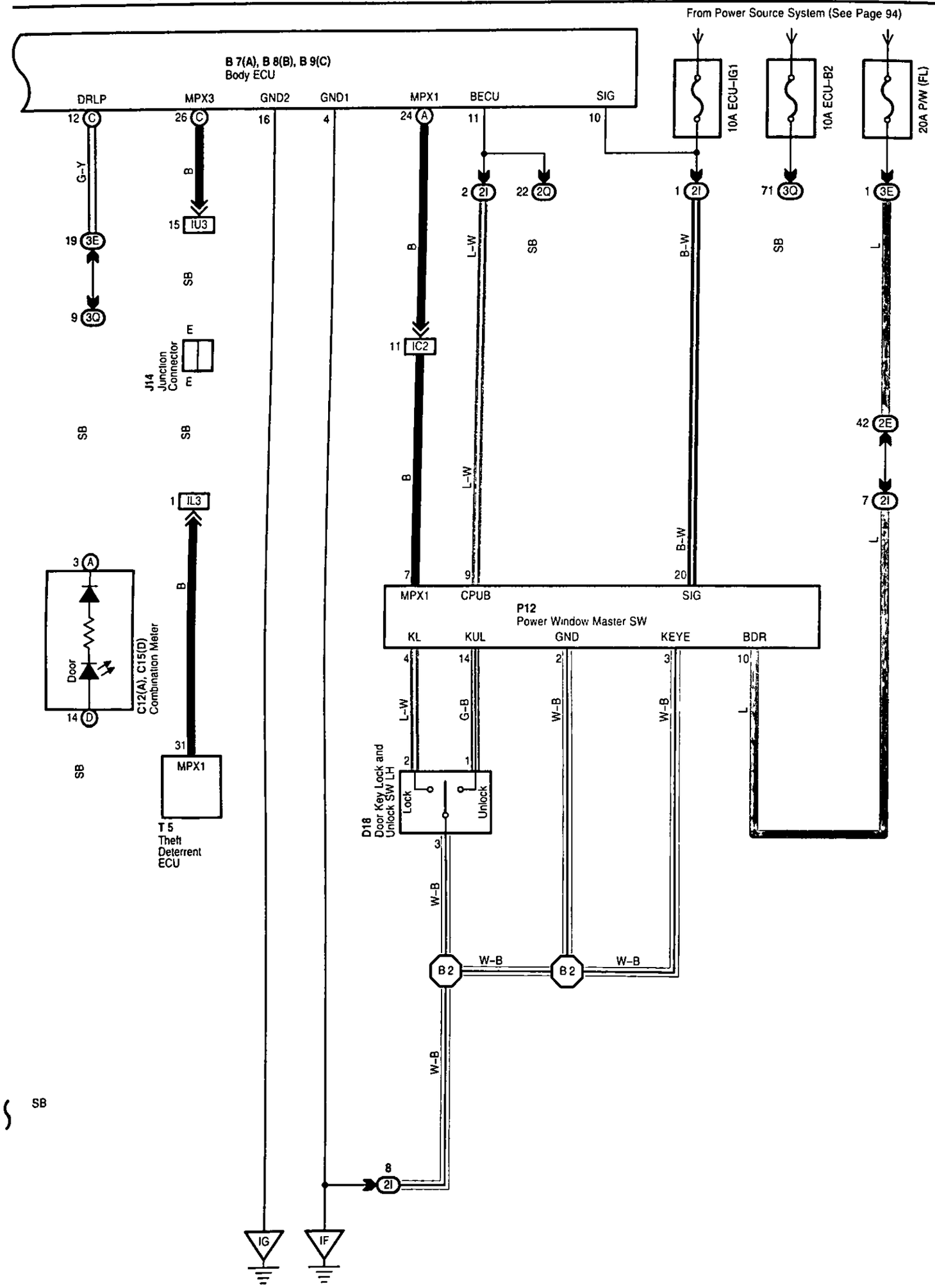

System Outline

Normal Operation

* When the front Door LH or RH is opened, the door courtesy light front LH, RH and open door warning light is turned on. When the front door LH and RH are closed, the door courtesy light front LH, RH is turned off.
* When the rear door LH, RH or the back door is opened, door courtesy light rear LH, RH, rear interior light and the open door warning light is turned on. When the rear door LH, RH and back door are closed, the door courtesy light rear LH, RH is turned off.
* When all the doors are closed, the open door warning light is turned off.

Turn Off Function

When the ignition SW turned off and there is no change in the door courtesy SW for approx. 30 minute, the DOME relay is turned off. The DOME relay is turned on again when any of the following conditions are met.

* Ignition SW is turned from OFF position to ACC or ON position
* Change to any door courtesy SW
* Driver or front passenger door is unlocked by the key or transmitter

Immediate Turn Off Function at Door Lock

When all the doors are closed, and the driver or front passenger door is locked by the key or transmitter, the DOME relay is turned off, after approx 80 seconds. However, when the illuminated entry system is operating, the DOME relay is turned off after the operation is completed the DOME relay is turned on again when any of the following conditions are met.

* Ignition SW is turned from OFF position to ACC or ON position
* Change to any door courtesy SW
* Driver or front passenger door is unlocked by the key or transmitter

Illuminated Entry System

* When any door is opened, each light is turned on
* The light remains on for approx. 15 seconds after all doors are closed, and fades out.
* With the ignition SW is at ACC or ON position, and any door open, when all the doors are closed, each light fades out immediately.
* When the ignition SW is turned to ACC or ON position during timer lighting, each light fades out immediately.
* When the doors are locked during timer lighting, each light fades out immediately.
* The lights include, the front interior light, ignition key cylinder light, and front door courtesy light LH, RH.

○ : Parts Location

Code		See Page	Code	See Page	Code	See Page
B2		72	D13	72	F11	72
B3		72	D14	72	J14	71
B7	A	70	D15	72	J22	72
B8	B	70	D16	72	P12	73
B9	C	70	D17	72	R27	73
C12	A	70	D18	72	T5	71
C15	D	70	D19	72	T10	71
D10		72	D20	72	V6	73
D11		72	D27	72	V7	73
D12		72	F10	72		

▭ : Junction Block and Wire Harness Connector

Code	See Page	Junction Block and Wire Harness (Connector Location)
2E	28	Dash Wire and Cowl Side J/B LH (Left Kick Panel)
2G		
2I	28	Front Door LH Wire and Cowl Side J/B LH (Left Kick Panel)
2K	28	Floor No.1 Wire and Cowl Side J/B LH (Left Kick Panel)
2L	28	Roof No 1 Wire and Cowl Side J/B LH (Left Kick Panel)
2Q	30	Instrument Panel Integration Wire and Cowl Side J/B LH (Left Kick Panel)
3E	40	Dash Wire and Cowl Side J/B RH (Right Kick Panel)
3I	40	Front Door RH Wire and Cowl Side J/B RH (Right Kick Panel)
3J		
3K	40	Floor No.2 Wire and Cowl Side J/B RH (Right Kick Panel)
3Q	42	Instrument Panel Integration Wire and Cowl Side J/B RH (Right Kick Panel)

Interior Light

: Connector Joining Wire Harness and Wire Harness

Code	See Page	Joining Wire Harness and Wire Harness (Connector Location)
IC2	78	Front Door LH Wire and Dash Wire (Left Kick Panel)
ID4	78	Dash Wire and Floor No.1 Wire (Left Kick Panel)
IL3	80	Instrument Panel Integration Wire and Computer Wire (Instrument Panel Center)
IU3	82	Instrument Panel Integration Wire and Dash Wire (Behind the Glove Box)
IV3	82	Dash Wire and Floor No 2 Wire (Right Kick Panel)
IV4		
IY2	82	Front Door RH Wire and Dash Wire (Right Kick Panel)
BA4	86	Rear Door LH Wire and Floor No.1 Wire (Left Side of Center Pillar)
BC4	86	Rear Door RH Wire and Floor No 2 Wire (Right Side of Center Pillar)
BH2	86	Pillar No.1 Wire and Back Door Upper Wire (Left Side of Back Door)
BP3	88	Pillar No 1 Wire and Floor No.1 Wire (Left Rear Side Quarter Panel)
BP4		
BQ2	88	Back Door Lower Wire and Floor No 1 Wire (Left Rear Side Quarter Panel)
BR1	88	Roof No.3 Wire and Roof No.1 Wire (Front Side of Roof)

: Ground Points

Code	See Page	Ground Points Location
IF	78	Set Bolt of Cowl Side J/B LH
IG		
II	78	Set Bolt of Cowl Side J/B RH
BJ	86	Under the Driver's Seat

: Splice Points

Code	See Page	Wire Harness with Splice Points	Code	See Page	Wire Harness with Splice Points
B2	88	Front Door LH Wire	B8	88	Front Door RH Wire
B7	88	Roof Wire	B11	88	Floor No 1 Wire

Stop Light

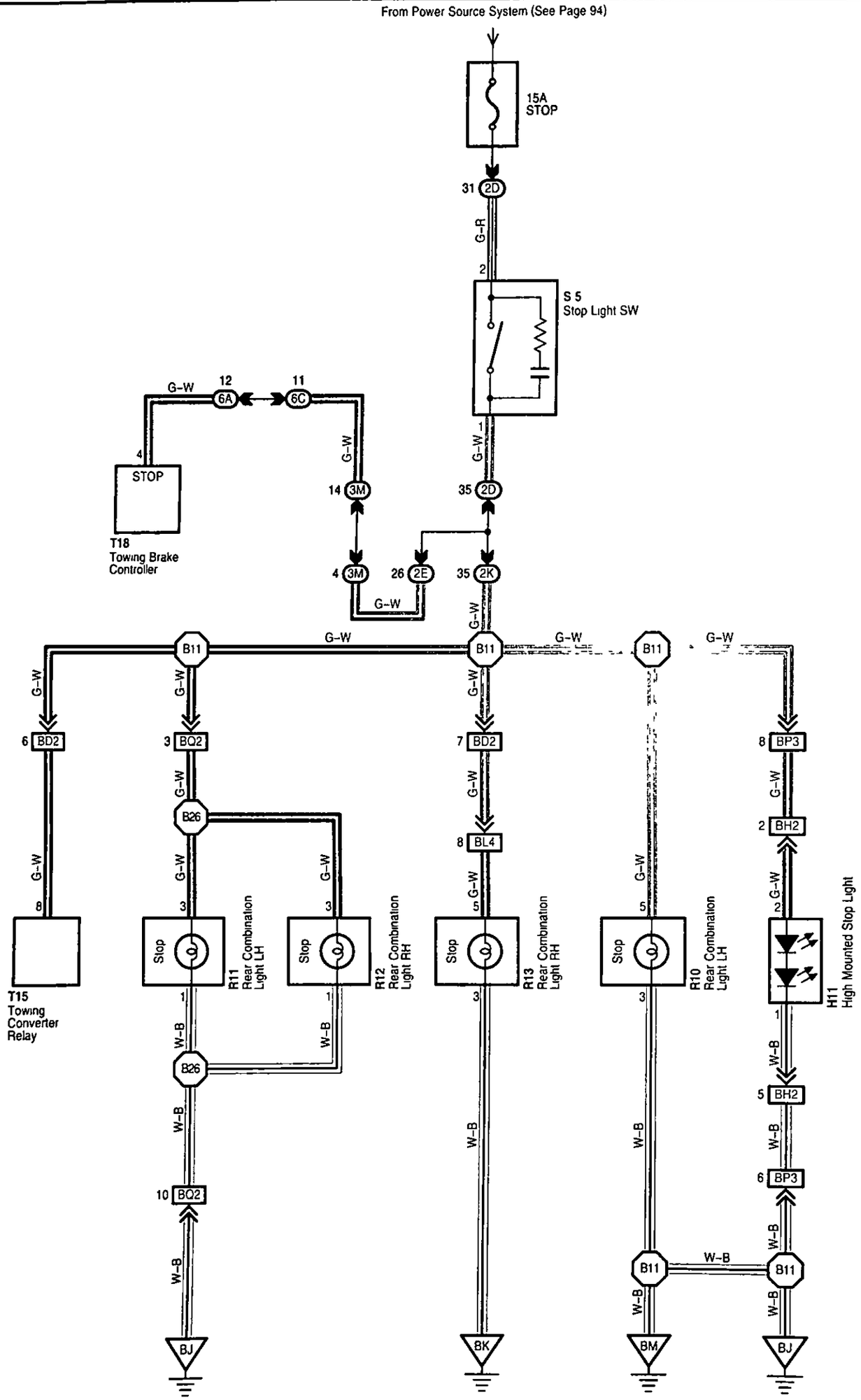
From Power Source System (See Page 94)
15A
STOP
31 2D
G-R
2
S 5
Stop Light SW
G-W 12 6A
11 6C
G-W
4
STOP
T18
Towing Brake
Controller
14 3M
1
G-W
35 2D
4 3M
26 2E
35 2K
G-W
B11
G-W
6 BD2
3 BQ2
7 BD2
8 BP3
2 BH2
8 BL4
B26
T15
Towing
Converter
Relay
Stop
R11
Rear Combination
Light LH
R12
Rear Combination
Light RH
R13
Rear Combination
Light RH
R10
Rear Combination
Light LH
H11
High Mounted Stop Light
W-B
10 BQ2
5 BH2
6 BP3
BJ
BK
BM

Service Hints

S5 Stop Light SW

2-1 : Closed with brake pedal depressed

○ : Parts Location

Code	See Page	Code	See Page	Code	See Page
H11	72	R12	73	T15	73
R10	73	R13	73	T18	71
R11	73	S5	71		

▢ : Junction Block and Wire Harness Connector

Code	See Page	Junction Block and Wire Harness (Connector Location)
2D 2E	28	Dash Wire and Cowl Side J/B LH (Left Kick Panel)
2K	28	Floor No 1 Wire and Cowl Side J/B LH (Left Kick Panel)
3M	43	Dash Wire and Cowl Side J/B RH (Right Kick Panel)
6A 6C	60	Dash Wire and J/B No 6 (Behind the Grove Box)

□ : Connector Joining Wire Harness and Wire Harness

Code	See Page	Joining Wire Harness and Wire Harness (Connector Location)
BD2	86	Floor No 3 Wire and Floor No 1 Wire (Left Rear Side Quarter Panel)
BH2	86	Pillar No 1 Wire and Back Door Upper Wire (Left Side of Back Door)
BL4	88	Floor No 2 Wire and Floor No 3 Wire (Right Side of Rear Floor Crossmember)
BP3	88	Pillar No 1 Wire and Floor No 1 Wire (Left Rear Side Quarter Panel)
BQ2	88	Back Door Lower Wire and Floor No.1 Wire (Left Rear Side Quarter Panel)

▽ : Ground Points

Code	See Page	Ground Points Location
BJ	86	Under the Driver's Seat
BK	86	Front Side Under the Front Passenger's Seat
BM	86	Left Rear Side Quarter Panel

⬡ : Splice Points

Code	See Page	Wire Harness with Splice Points	Code	See Page	Wire Harness with Splice Points
B11	88	Floor No.1 Wire	B26	88	Back Door Lower Wire

Trailer Towing

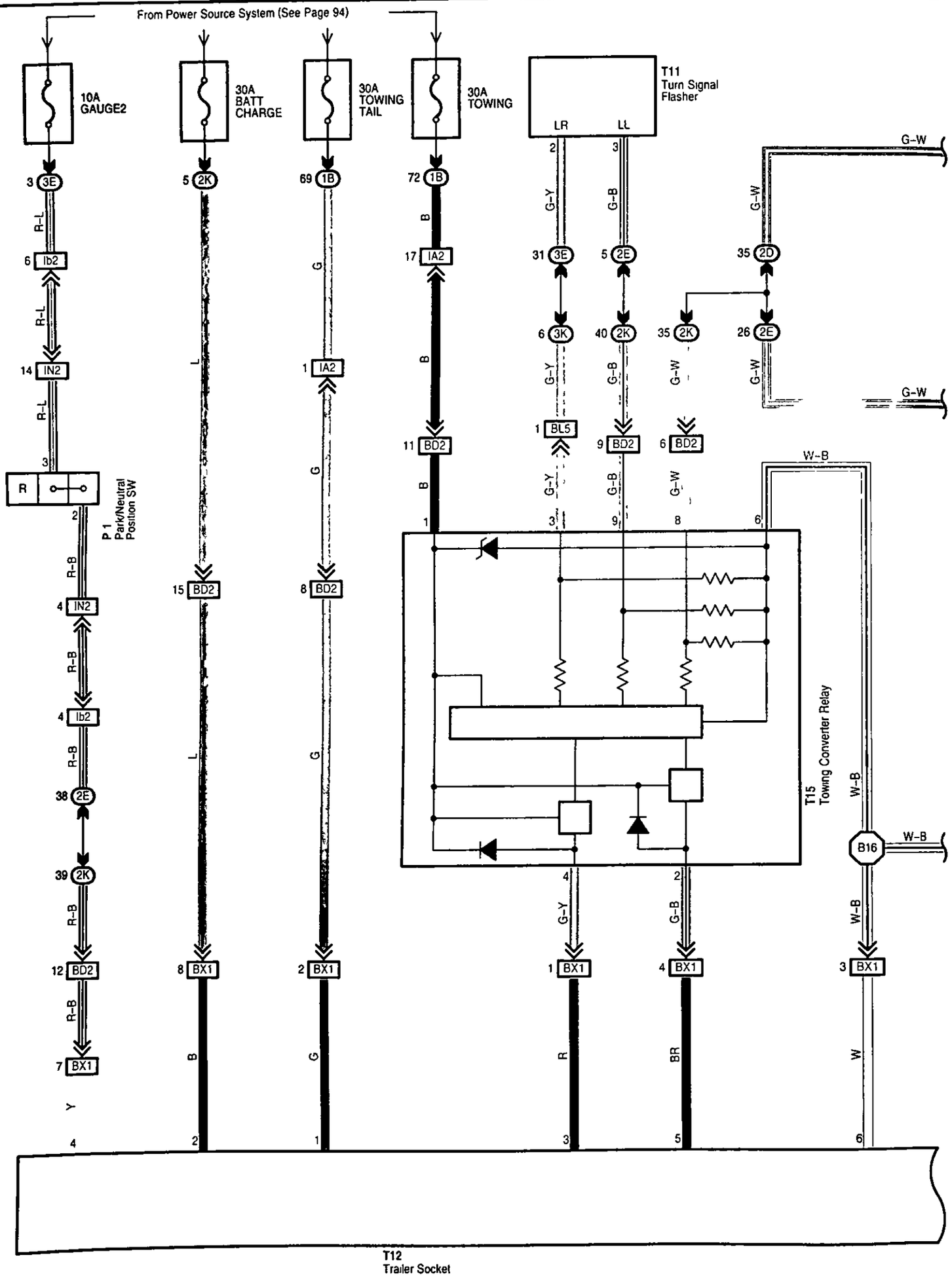

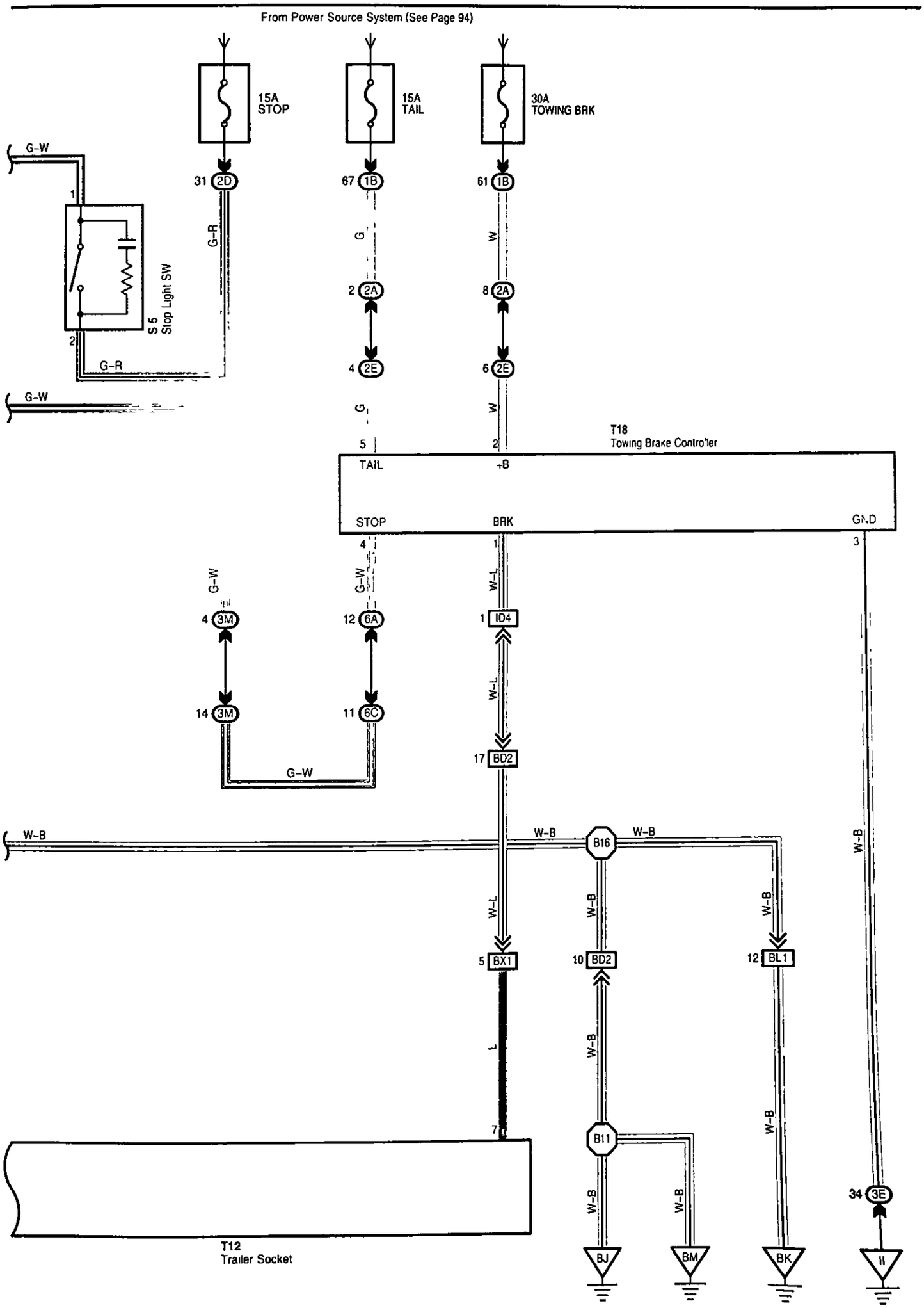
From Power Source System (See Page 94)
15A STOP
15A TAIL
30A TOWING BRK
G-W
1
S 5 Stop Light SW
2
G-R
G-W
31 2D
67 1B
61 1B
G-R
G
W
2 2A
8 2A
4 2E
6 2E
G
W
5
2
T18
Towing Brake Controller
TAIL
+B
STOP
BRK
GND
4
1
3
G-W
G-W
W-L
4 3M
12 6A
1 ID4
W-L
14 3M
11 6C
17 BD2
G-W
W-B
W-B
B16
W-B
W-B
W-L
W-B
W-B
5 BX1
10 BD2
12 BL1
L
W-B
W-B
7
B11
34 3E
W-B
W-B
BJ
BM
BK
T12
Trailer Socket

Trailer Towing

Service Hints

T15 Towing Converter Relay

1-Ground : Always approx. 12 volts

6-Ground : Always continuity

S5 Stop Light SW

2-1 : Closed with brake pedal depressed

○ : Parts Location

Code	See Page	Code	See Page	Code	See Page
P1	69	T11	71	T15	73
S5	71	T12	73	T18	71

⬭ : Junction Block and Wire Harness Connector

Code	See Page	Junction Block and Wire Harness (Connector Location)
1B	24	Engine Room No.2 Wire and Engine Room J/B (Engine Compartment Left)
2A	28	Engine Room No 2 Wire and Cowl Side J/B LH (Left Kick Panel)
2D 2E	28	Dash Wire and Cowl Side J/B LH (Left Kick Panel)
2K	28	Floor No 1 Wire and Cowl Side J/B LH (Left Kick Panel)
3E	40	Dash Wire and Cowl Side J/B RH (Right Kick Panel)
3K	40	Floor No 2 Wire and Cowl Side J/B RH (Right Kick Panel)
3M	43	Dash Wire and Cowl Side J/B RH (Right Kick Panel)
6A 6C	60	Dash Wire and J/B No.6 (Behind the Grove Box)

□ : Connector Joining Wire Harness and Wire Harness

Code	See Page	Joining Wire Harness and Wire Harness (Connector Location)
IA2	78	Engine Room No 2 Wire and Floor No 1 Wire (Left Kick Panel)
ID4	78	Dash Wire and Floor No 1 Wire (Left Kick Panel)
IN2	80	Engine Wire and Dash Wire (Behind the Glove Box)
Ib2	84	Dash Wire and Dash Wire (Behind the Combination Meter)
BD2	86	Floor No.3 Wire and Floor No.1 Wire (Left Rear Side Quarter Panel)
BL1 BL5	88	Floor No.2 Wire and Floor No.3 Wire (Right Side of Rear Floor Crossmember)
BX1	88	Frame No.4 Wire and Floor No 3 Wire (Left Side of Rear Floor Crossmember)

▽ : Ground Points

Code	See Page	Ground Points Location
II	78	Set Bolt of Cowl Side J/B RH
BJ	86	Under the Driver's Seat
BK	86	Front Side Under the Front Passenger's Seat
BM	86	Left Rear Side Quarter Panel

⬡ : Splice Points

Code	See Page	Wire Harness with Splice Points	Code	See Page	Wire Harness with Splice Points
B11	88	Floor No.1 Wire	B16	88	Floor No.3 Wire

Back-Up Light

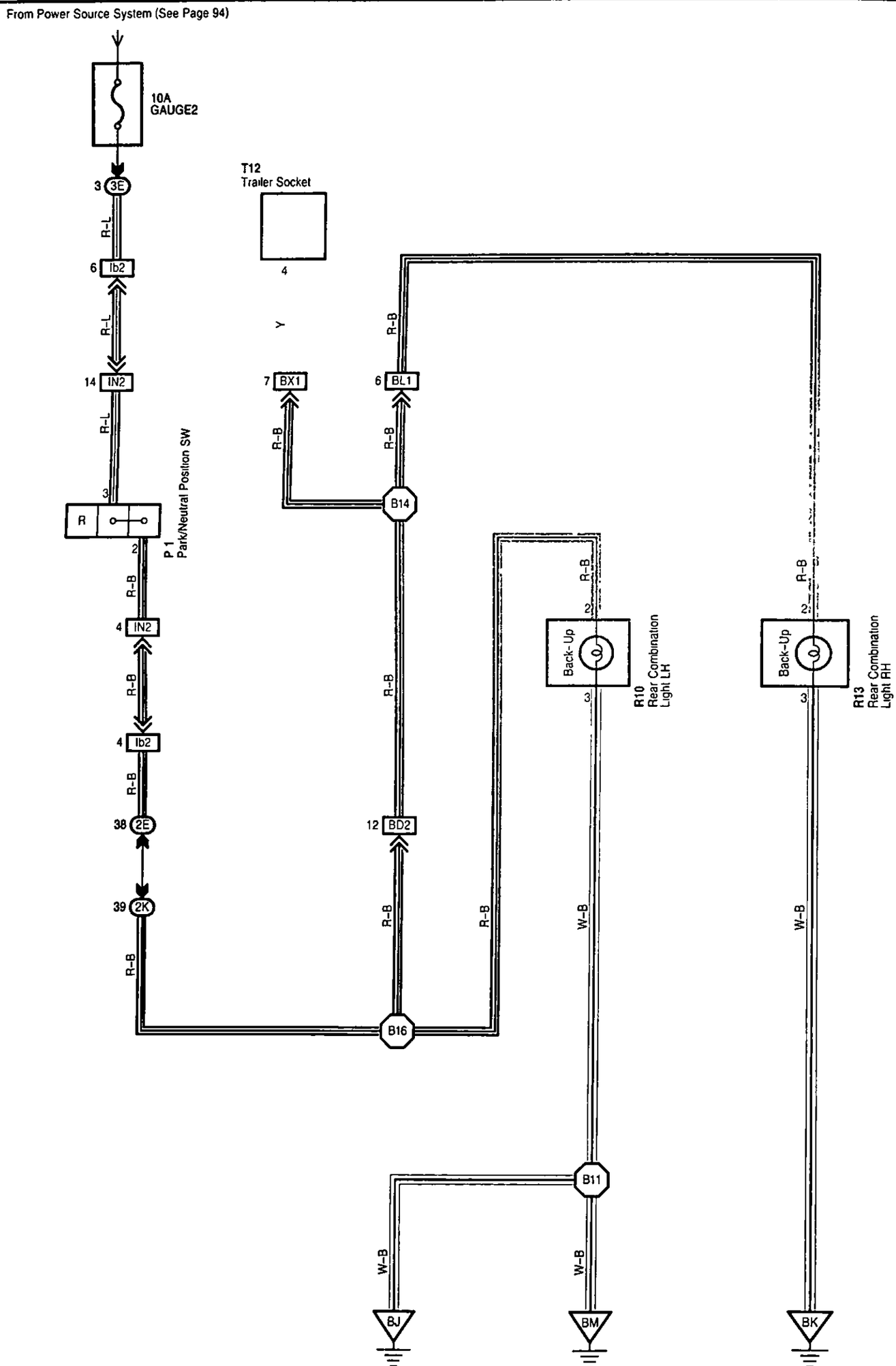

Service Hints

P1 Park/Neutral Position SW

3-2 : Closed with shift lever at R position

○ : Parts Location

Code	See Page	Code	See Page	Code	See Page
P1	69	R13	73		
R10	73	T12	73		

⬭ : Junction Block and Wire Harness Connector

Code	See Page	Junction Block and Wire Harness (Connector Location)
2E	28	Dash Wire and Cowl Side J/B LH (Left Kick Panel)
2K	28	Floor No 1 Wire and Cowl Side J/B LH (Left Kick Panel)
3E	40	Dash Wire and Cowl Side J/B RH (Right Kick Panel)

□ : Connector Joining Wire Harness and Wire Harness

Code	See Page	Joining Wire Harness and Wire Harness (Connector Location)
IN2	80	Engine Wire and Dash Wire (Behind the Glove Box)
Ib2	84	Dash Wire and Dash Wire (Behind the Combination Meter)
BD2	86	Floor No 3 Wire and Floor No 1 Wire (Left Rear Side Quarter Panel)
BL1	88	Floor No 2 Wire and Floor No 3 Wire (Right Side of Rear Floor Crossmember)
BX1	88	Frame No 4 Wire and Floor No.3 Wire (Left Side of Rear Floor Crossmember)

▽ : Ground Points

Code	See Page	Ground Points Location
BJ	86	Under the Driver's Seat
BK	86	Front Side Under the Front Passenger's Seat
BM	86	Left Rear Side Quarter Panel

⯃ : Splice Points

Code	See Page	Wire Harness with Splice Points	Code	See Page	Wire Harness with Splice Points
B11	88	Floor No.1 Wire	B16	88	Floor No 3 Wire
B14	88	Floor No 2 Wire			

Automatic Light Control

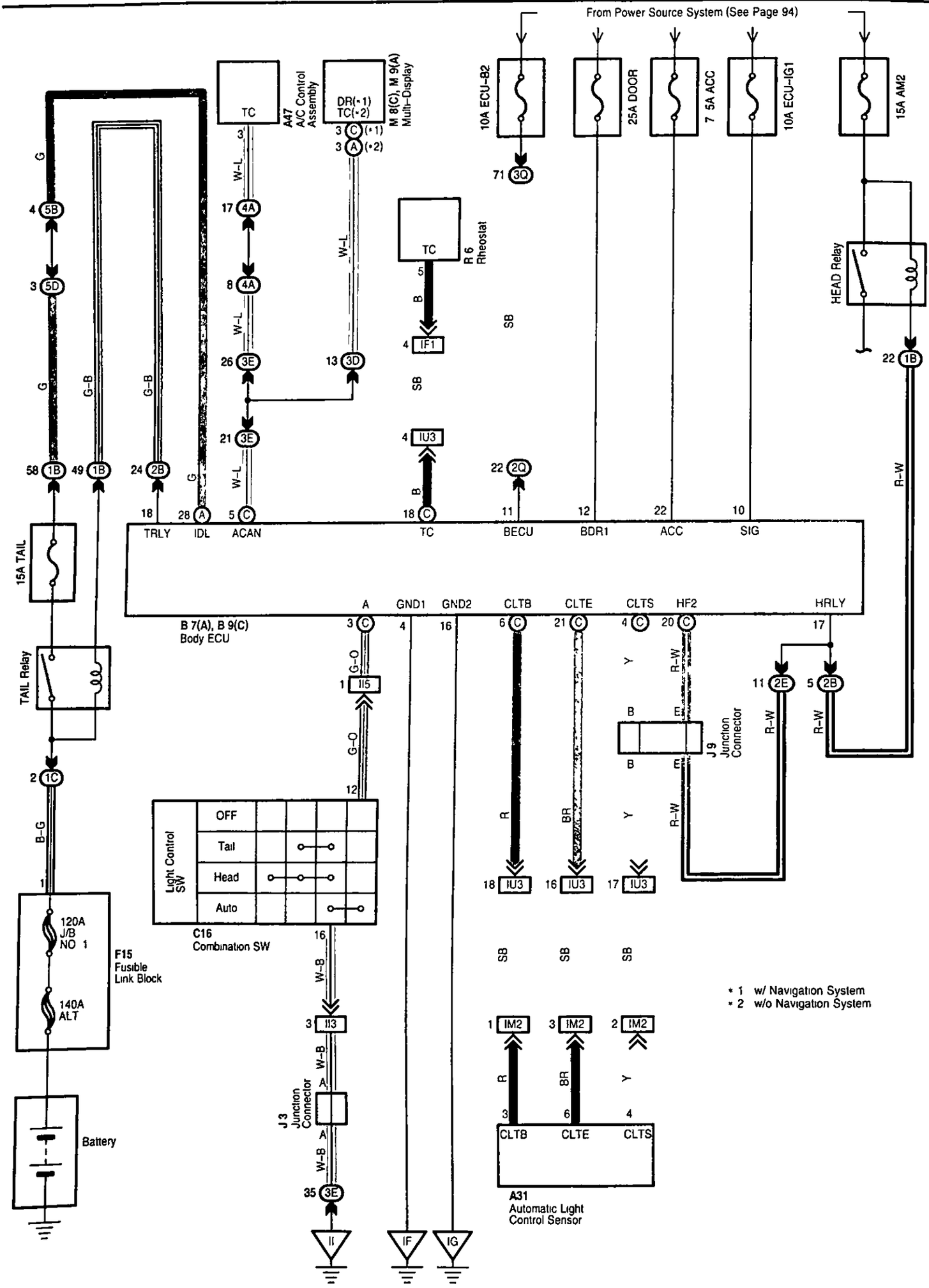

System Outline

The automatic light control system works when the light control SW is turned to AUTO. The automatic light control sensor detects the brightness around the vehicle. By this function, the system automatically turns the taillight and headlight on if the brightness is below the regular level and turns the taillight and headlight off when the surroundings become brighter than the regular level.

Service Hints

Body ECU

11, 12-Ground : Always approx. 12 volts
22-Ground : Approx. 12 volts with ignition SW at ACC or ON position
10-Ground : Approx. 12 volts with ignition SW at ON or ST position
4, 16-Ground : Always continuity

○ : Parts Location

Code		See Page	Code	See Page	Code		See Page
A31		70	C16	70	M8	C	71
A47		70	F15	68	M9	A	71
B7	A	70	J3	71	R6		71
B9	C	70	J9	71			

▭ : Junction Block and Wire Harness Connector

Code	See Page	Junction Block and Wire Harness (Connector Location)
1B 1C	24	Engine Room No 2 Wire and Engine Room J/B (Engine Compartment Left)
2B	28	Engine Room No 2 Wire and Cowl Side J/B LH (Left Kick Panel)
2E	28	Dash Wire and Cowl Side J/B LH (Left Kick Panel)
2Q	30	Instrument Panel Integration Wire and Cowl Side J/B LH (Left Kick Panel)
3D 3E	40	Dash Wire and Cowl Side J/B RH (Right Kick Panel)
3Q	42	Instrument Panel Integration Wire and Cowl Side J/B RH (Right Kick Panel)
4A	52	Dash Wire and J/B No.4 (Instrument Panel Center)
5B	56	Dash Wire and J/B No 5 (Behind the Combination Meter)
5D	56	Engine Room No 2 Wire and J/B No 5 (Behind the Combination Meter)

□ : Connector Joining Wire Harness and Wire Harness

Code	See Page	Joining Wire Harness and Wire Harness (Connector Location)
IF1	78	Instrument Panel Integration Wire and Instrument Panel Wire (Left Side of Instrument Panel)
II3 II5	80	Dash Wire and Column Wire (Near the Ignition SW)
IM2	80	Instrument Panel Integration Wire and Instrument Panel No.3 Wire (Right Side of Instrument Panel)
IU3	82	Instrument Panel Integration Wire and Dash Wire (Behind the Glove Box)

▽ : Ground Points

Code	See Page	Ground Points Location
IF IG	78	Set Bolt of Cowl Side J/B LH
II	78	Set Bolt of Cowl Side J/B RH

Light Auto Turn Off

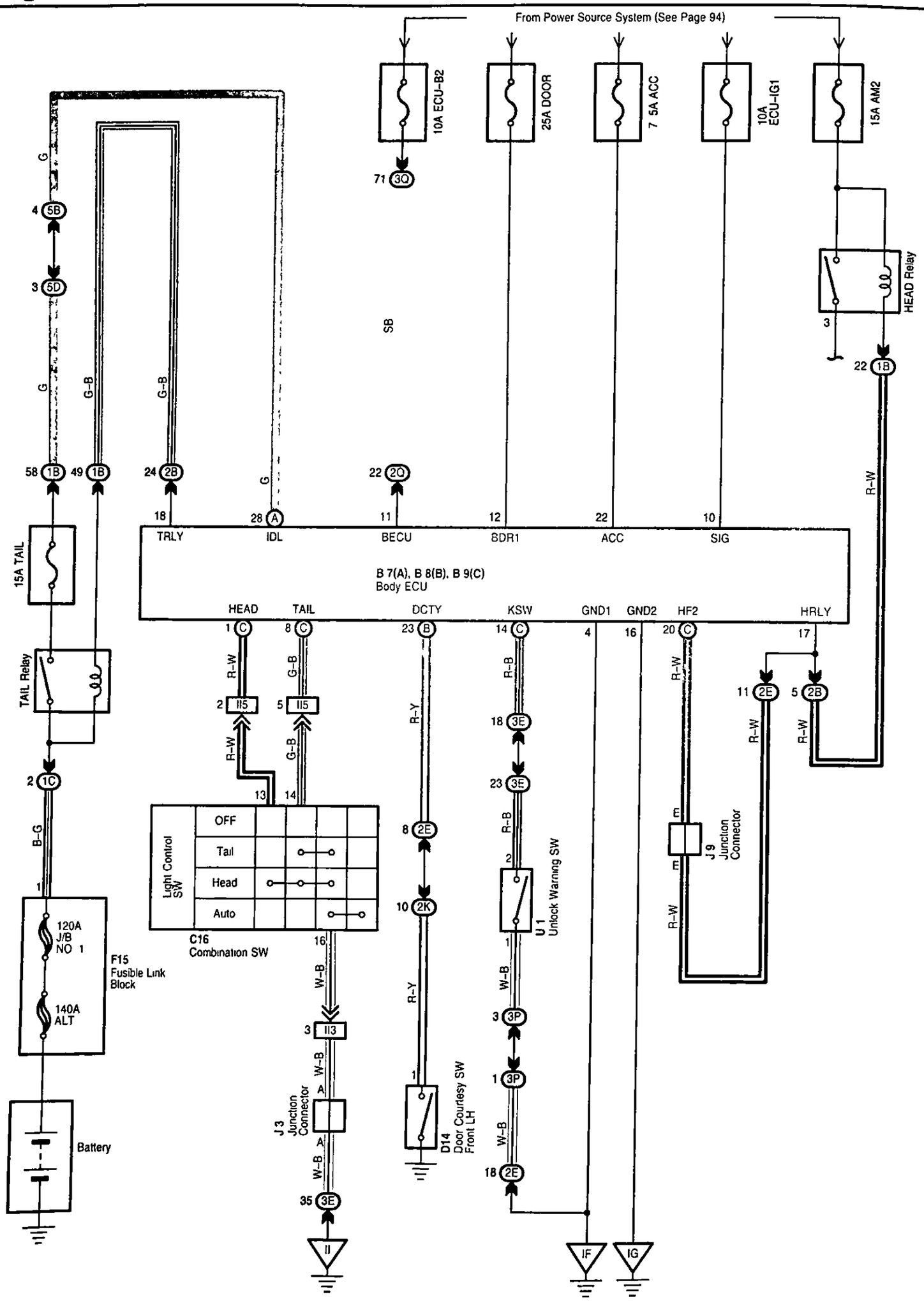

System Outline

The light auto turn off system automatically turns the taillight or headlight off according to the door open or close on the driver's side, and prevent failing to turn off the lights.
If the ignition switch is turned to OFF from ON with the headlight or taillight is on, the signal is input in the TERMINAL SIG of the body ECU. If the driver's side door is opened at that time, the signal from the door courtesy SW front LH is sent to the TERMINAL DCTY of the body ECU. The signal turns the headlight or taillight off.
Delayed turn off control
In the case of that some doors are opened, the headlight or taillight is left on for about 30 seconds after the all the doors was closed. However, if the doors are locked using the wireless door lock, the headlight or taillight is immediately turn off

Service Hints

Body ECU

11, 12-Ground : Always approx. 12 volts
10-Ground : Approx. 12 volts with ignition SW at ON or ST position
4, 16-Ground : Always continuity

○ : Parts Location

Code		See Page	Code	See Page	Code	See Page
B7	A	70	C16	70	J3	71
B8	B	70	D14	72	J9	71
B9	C	70	F15	68	U1	71

⬭ : Junction Block and Wire Harness Connector

Code	See Page	Junction Block and Wire Harness (Connector Location)
1B	24	Engine Room No 2 Wire and Engine Room J/B (Engine Compartment Left)
1C		
2B	28	Engine Room No.2 Wire and Cowl Side J/B LH (Left Kick Panel)
2E	28	Dash Wire and Cowl Side J/B LH (Left Kick Panel)
2K	28	Floor No 1 Wire and Cowl Side J/B LH (Left Kick Panel)
2Q	30	Instrument Panel Integration Wire and Cowl Side J/B LH (Left Kick Panel)
3E	40	Dash Wire and Cowl Side J/B RH (Right Kick Panel)
3P	43	
3Q	42	Instrument Panel Integration Wire and Cowl Side J/B RH (Right Kick Panel)
5B	56	Dash Wire and J/B No 5 (Behind the Combination Meter)
5D	56	Engine Room No 2 Wire and J/B No 5 (Behind the Combination Meter)

□ : Connector Joining Wire Harness and Wire Harness

Code	See Page	Joining Wire Harness and Wire Harness (Connector Location)
II3	80	Dash Wire and Column Wire (Near the Ignition SW)
II5		

▽ : Ground Points

Code	See Page	Ground Points Location
IF	78	Set Bolt of Cowl Side J/B LH
IG		
II	78	Set Bolt of Cowl Side J/B RH

Multiplex Communication System (Communication Bus)

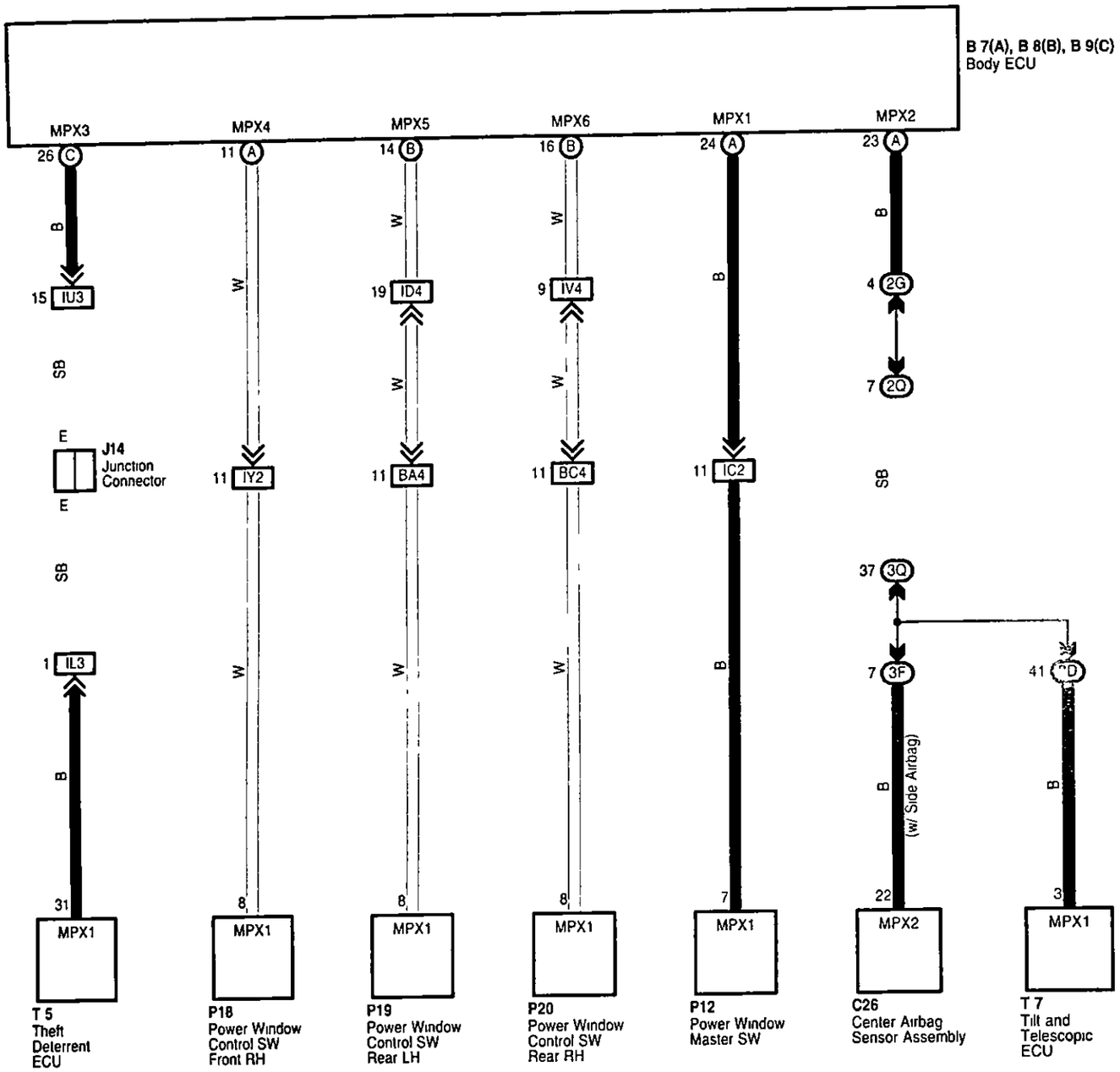

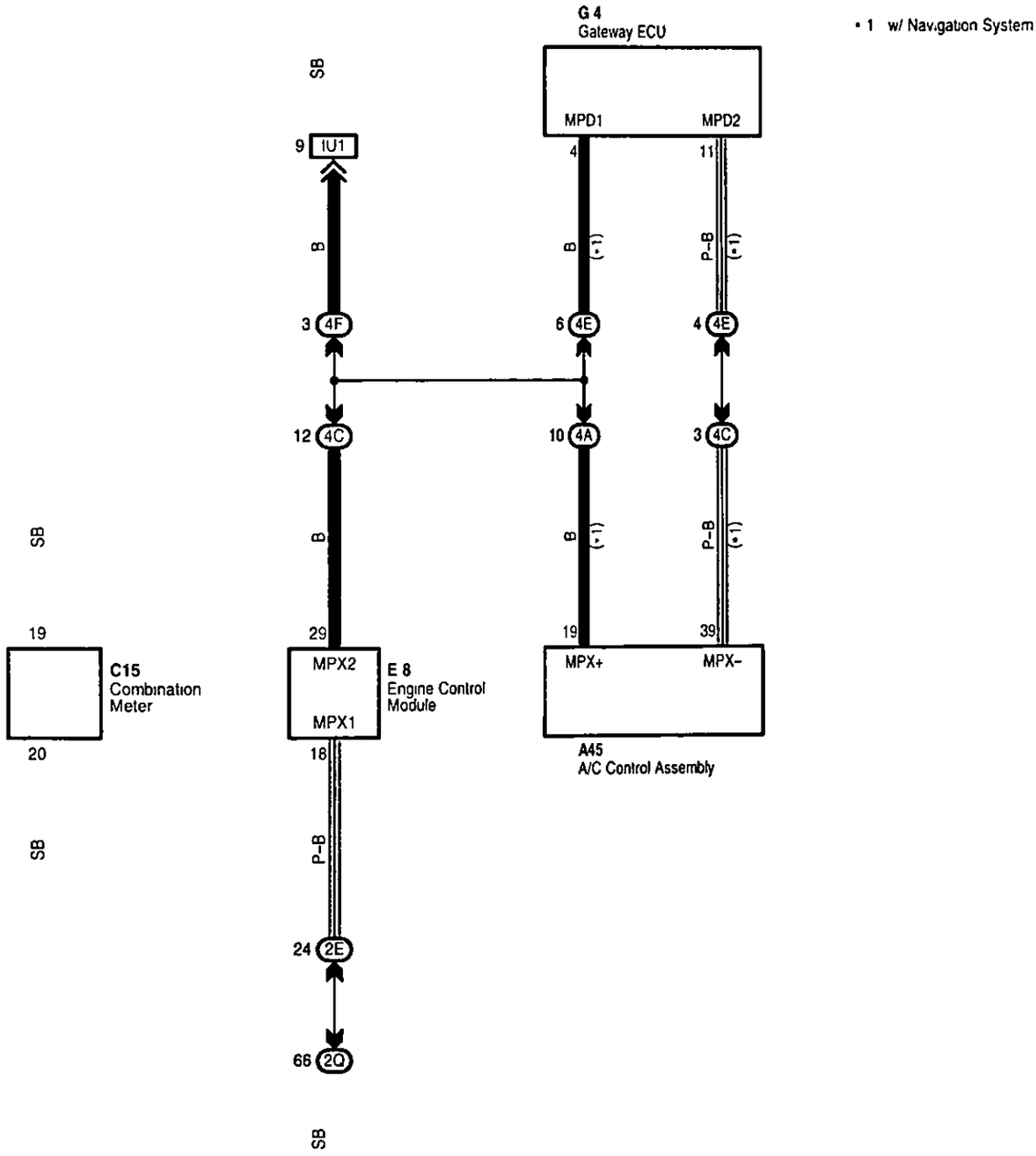
G 4
Gateway ECU
• 1 w/ Navigation System
MPD1
MPD2
SB
9
1U1
B
3
4F
12
4C
B
29
MPX2
MPX1
E 8
Engine Control Module
18
P-B
24
2E
66
2Q
SB
4
B
(• 1)
6
4E
10
4A
B
(• 1)
19
MPX+
11
P-B
(• 1)
4
4E
3
4C
P-B
(• 1)
39
MPX-
A45
A/C Control Assembly
SB
19
C15
Combination Meter
20
SB

Multiplex Communication System (Communication Bus)

Multiplex Communication System Includes Following Systems

* Automatic Light Control
* Door Lock Control
* Front Fog Light
* Headlight
* Interior Light
* Key Reminder
* Light Auto Turn Off
* Power Window
* Theft Deterrent
* Wireless Door Lock Control

Multiplex Communication System

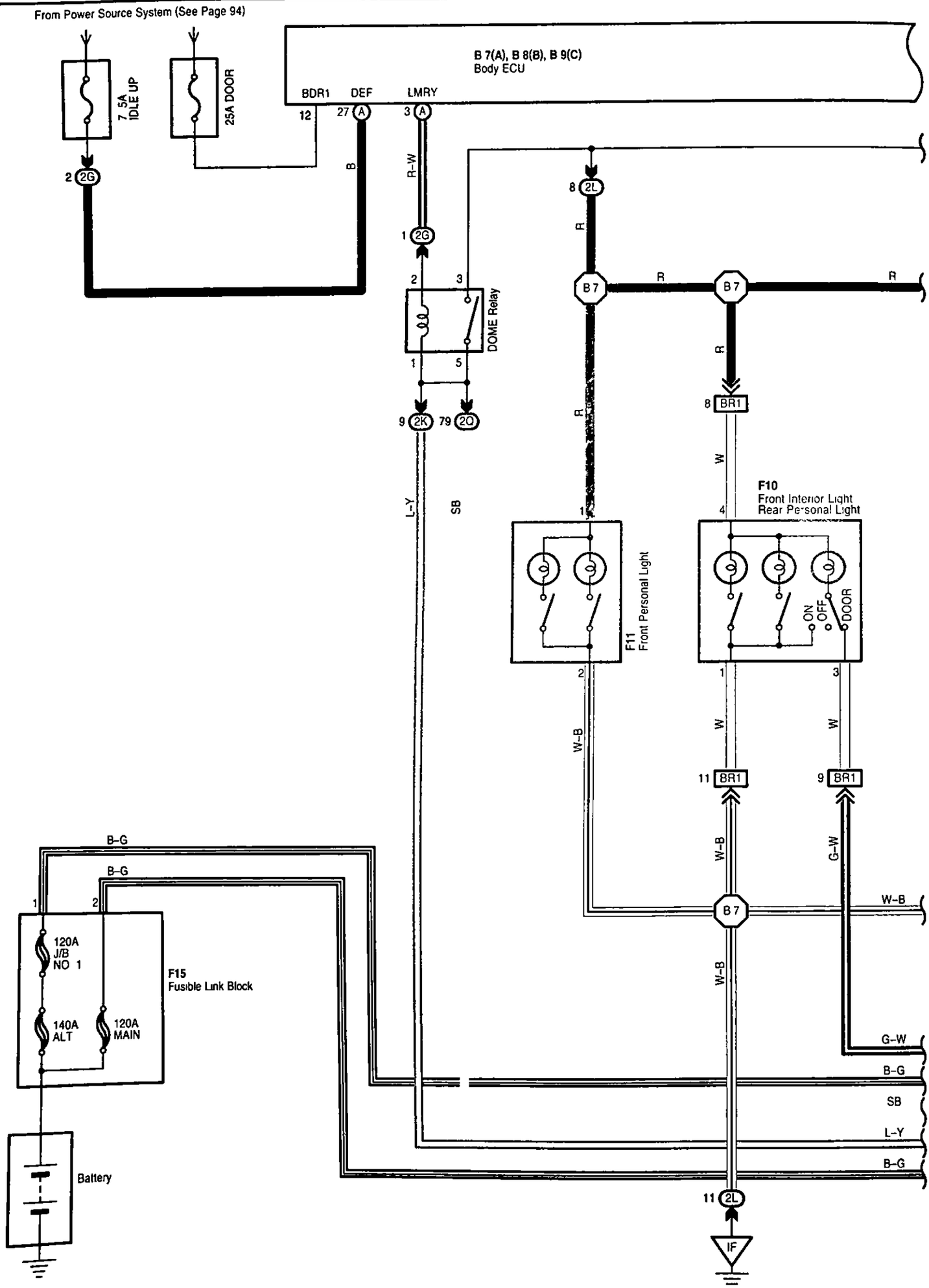

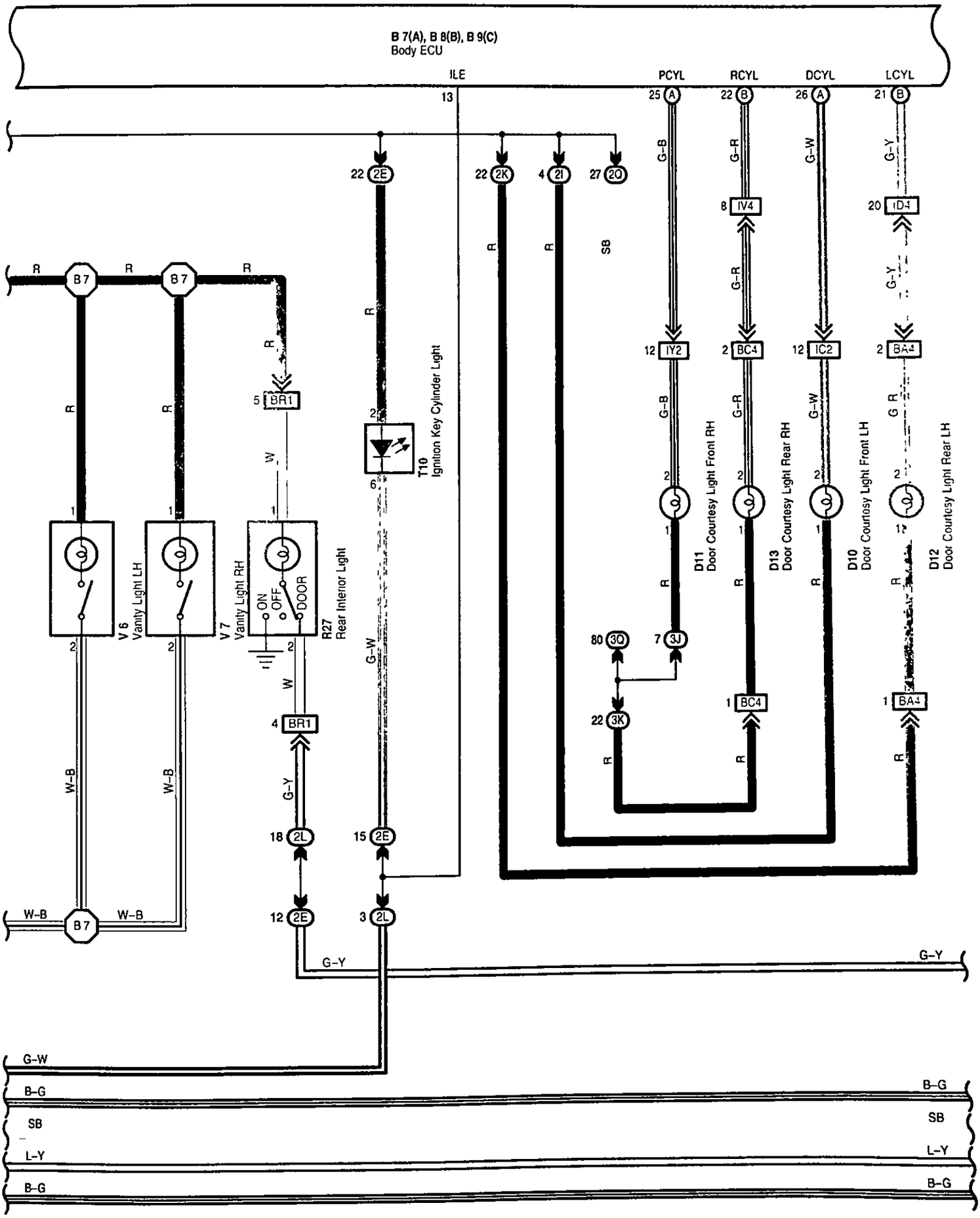
B 7(A), B 8(B), B 9(C)
Body ECU
ILE
PCYL
RCYL
DCYL
LCYL
13
25 A
22 B
26 A
21 B
22 2E
22 2K
4 2I
27 2O
G-B
G-R
G-W
G-Y
8 IV4
20 ID4
12 IY2
2 BC4
12 IC2
2 BA4
R
B7
5 BR1
W
T10
Ignition Key Cylinder Light
6
2
V 6
Vanity Light LH
V 7
Vanity Light RH
ON
OFF
DOOR
R27
Rear Interior Light
D11
Door Courtesy Light Front RH
D13
Door Courtesy Light Rear RH
D10
Door Courtesy Light Front LH
D12
Door Courtesy Light Rear LH
80 3O
7 3J
22 3K
1 BC4
1 BA4
4 BR1
18 2L
15 2E
12 2E
3 2L
W-B
G-Y
G-W
B-G
SB
L-Y

Multiplex Communication System

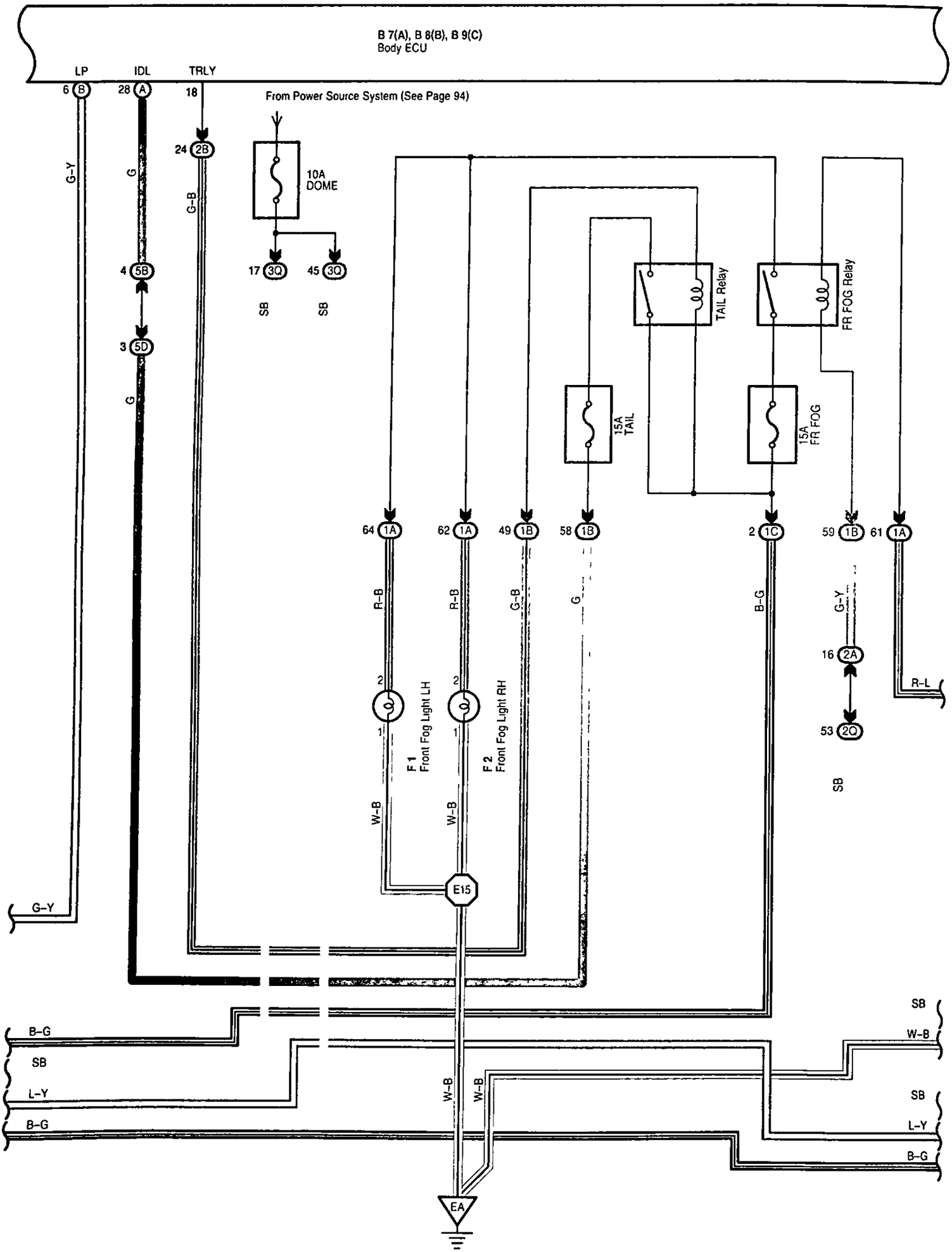

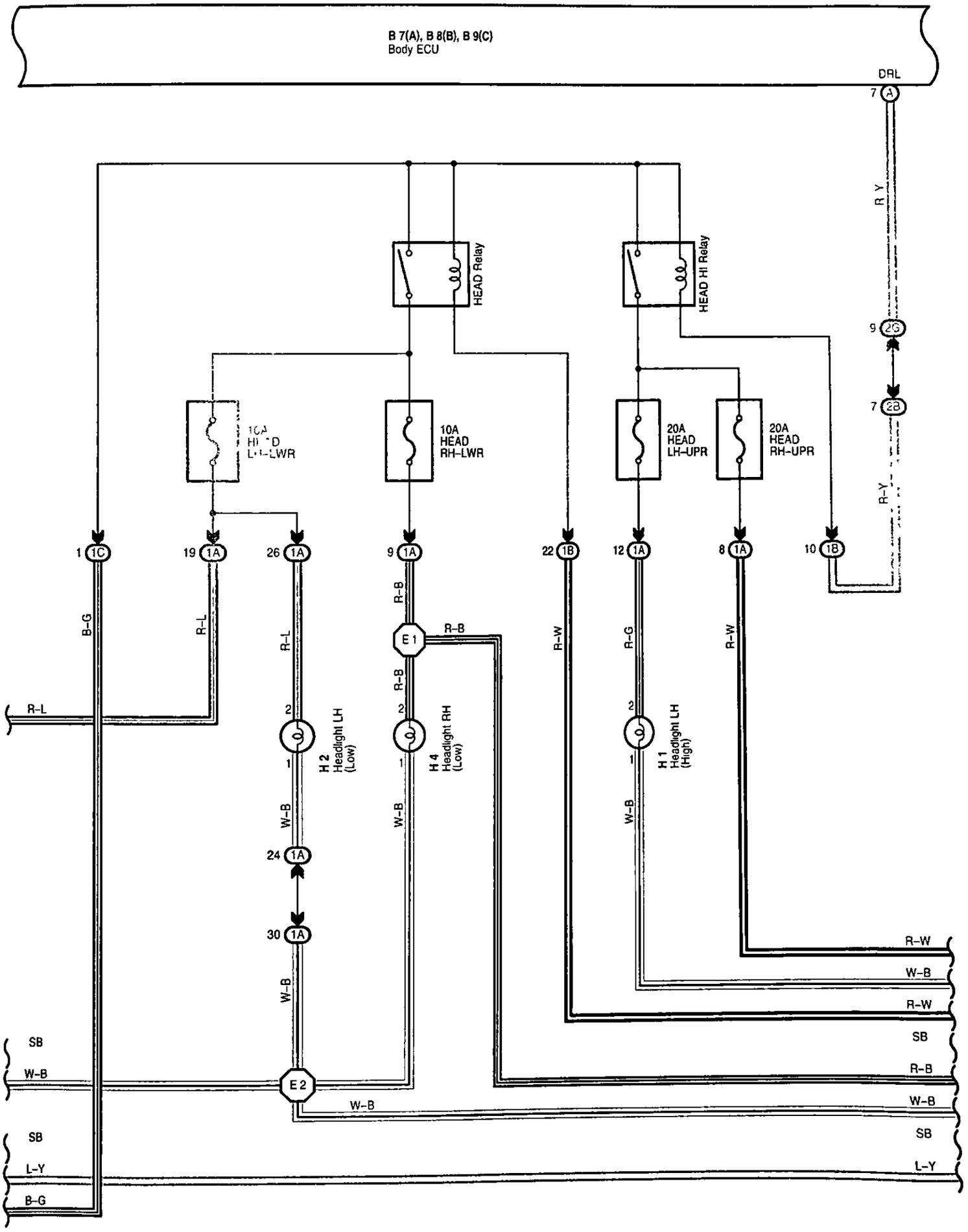
B 7(A), B 8(B), B 9(C)
Body ECU
DRL
7 A
R Y
HEAD Relay
HEAD HI Relay
9 2G
7 2B
10A
HEAD
RH-LWR
20A
HEAD
LH-UPR
20A
HEAD
RH-UPR
R-Y
1 1C
19 1A
26 1A
9 1A
22 1B
12 1A
8 1A
10 1B
B-G
R-L
R-B
R-W
R-G
E 1
2
1
H 2
Headlight LH
(Low)
H 4
Headlight RH
(Low)
H 1
Headlight LH
(High)
W-B
24 1A
30 1A
E 2
SB
L-Y

Multiplex Communication System

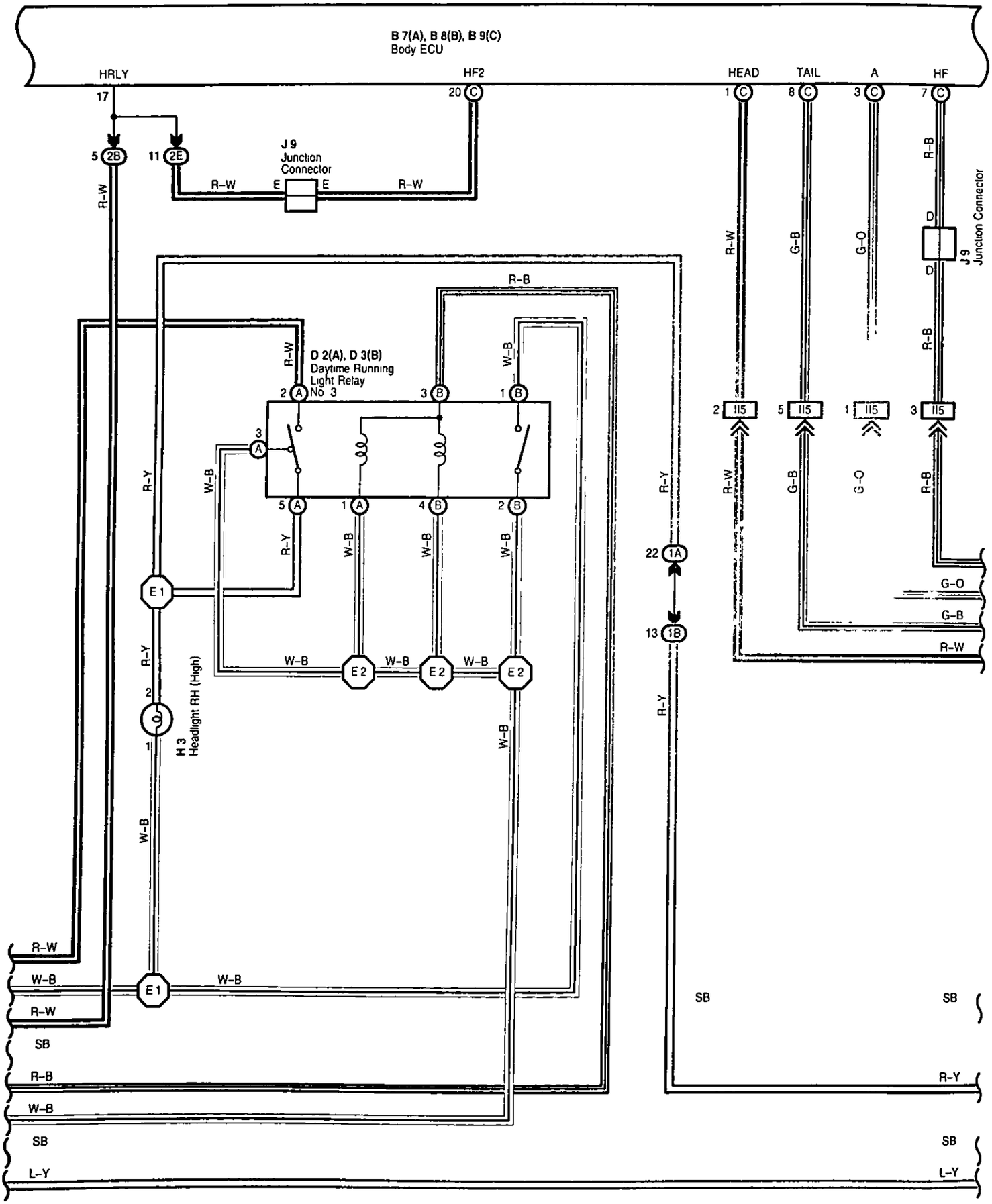

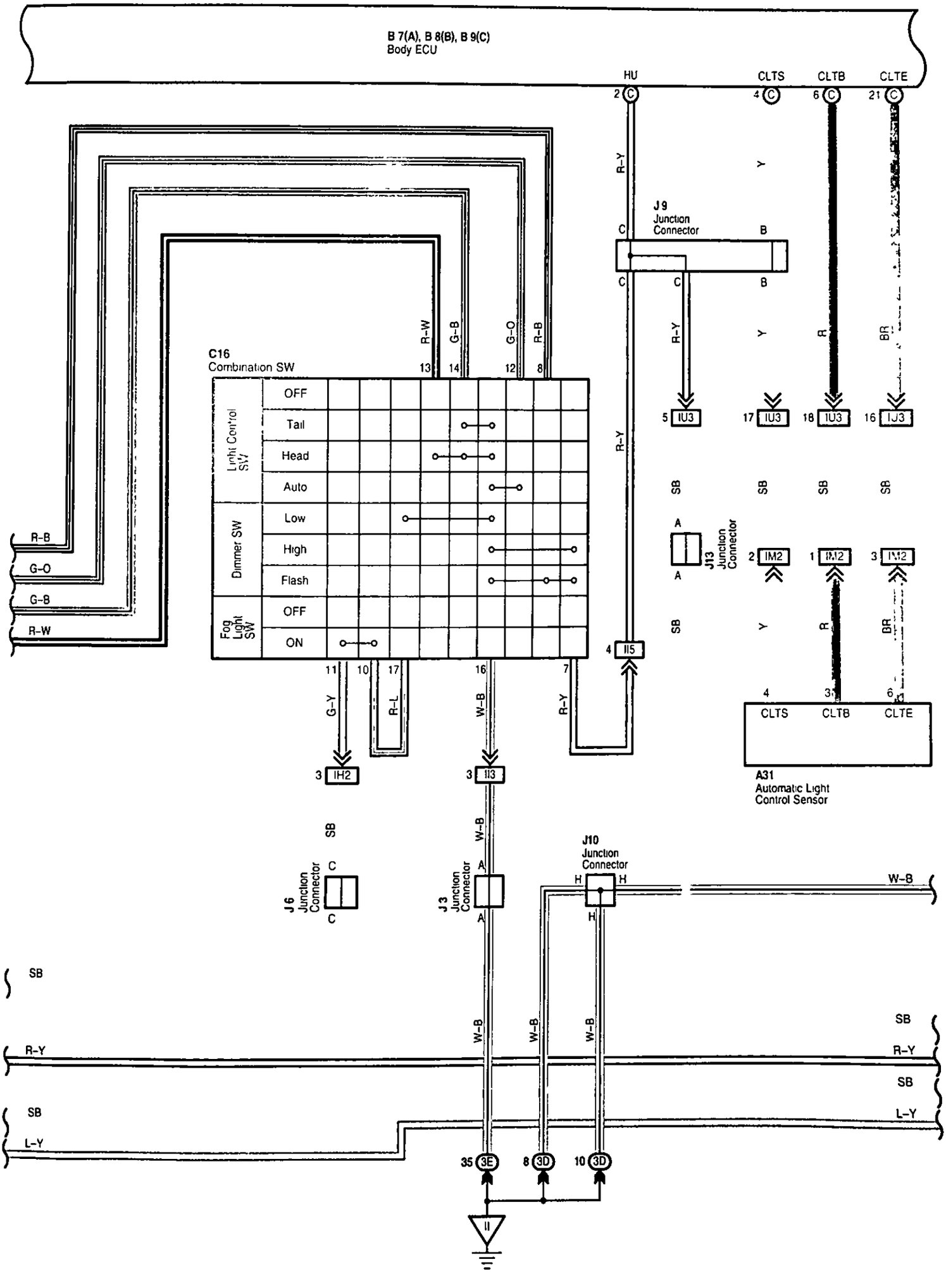
B 7(A), B 8(B), B 9(C)
Body ECU
HU
CLTS
CLTB
CLTE
J9
Junction
Connector
C16
Combination SW
Light Control SW
Dimmer SW
Fog Light SW
OFF
Tail
Head
Auto
Low
High
Flash
OFF
ON
R-B
G-O
G-B
R-W
R-Y
Y
R
BR
SB
G-Y
R-L
W-B
J13
Junction
Connector
A31
Automatic Light
Control Sensor
J6
Junction
Connector
J3
Junction
Connector
J10
Junction
Connector
L-Y

Multiplex Communication System

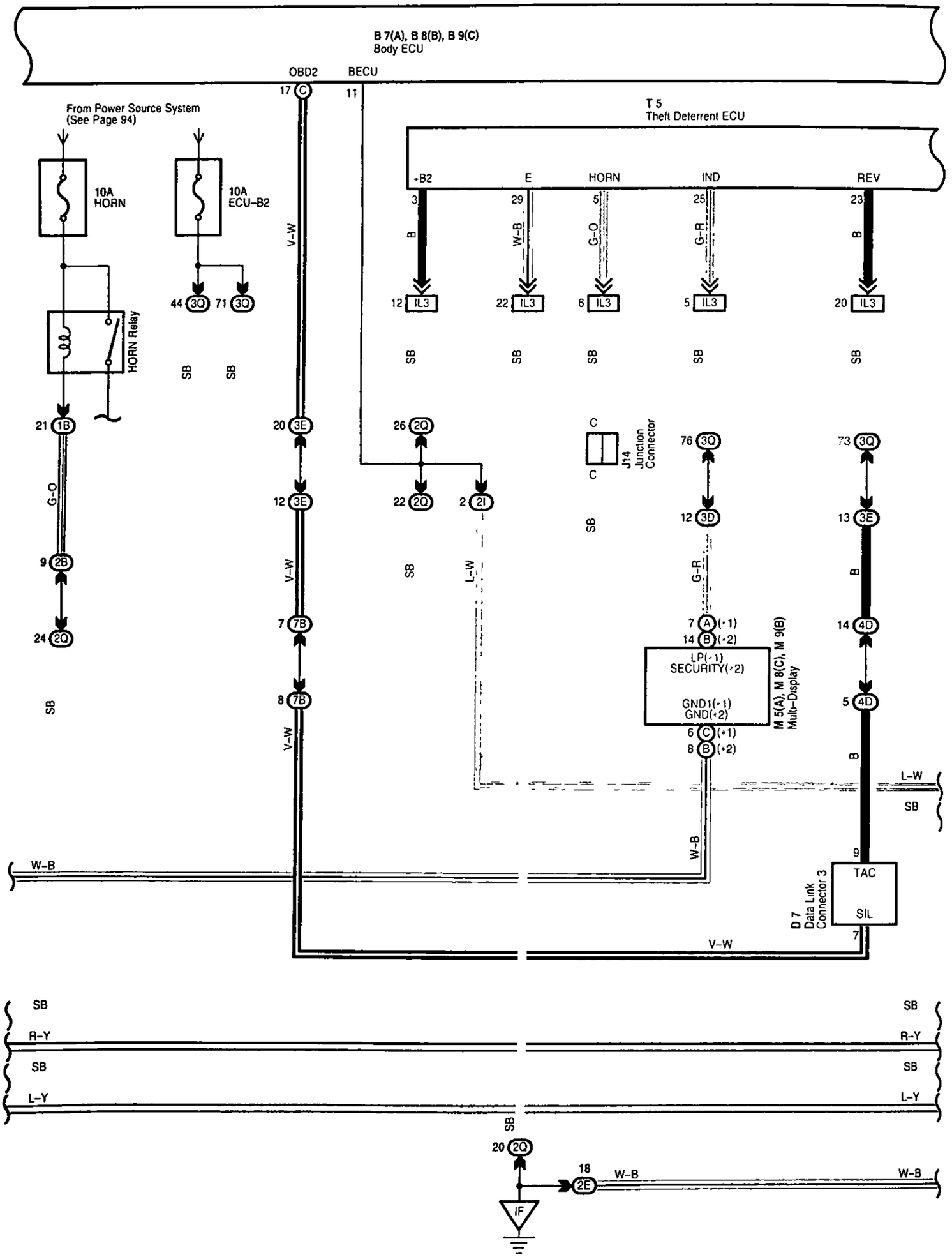

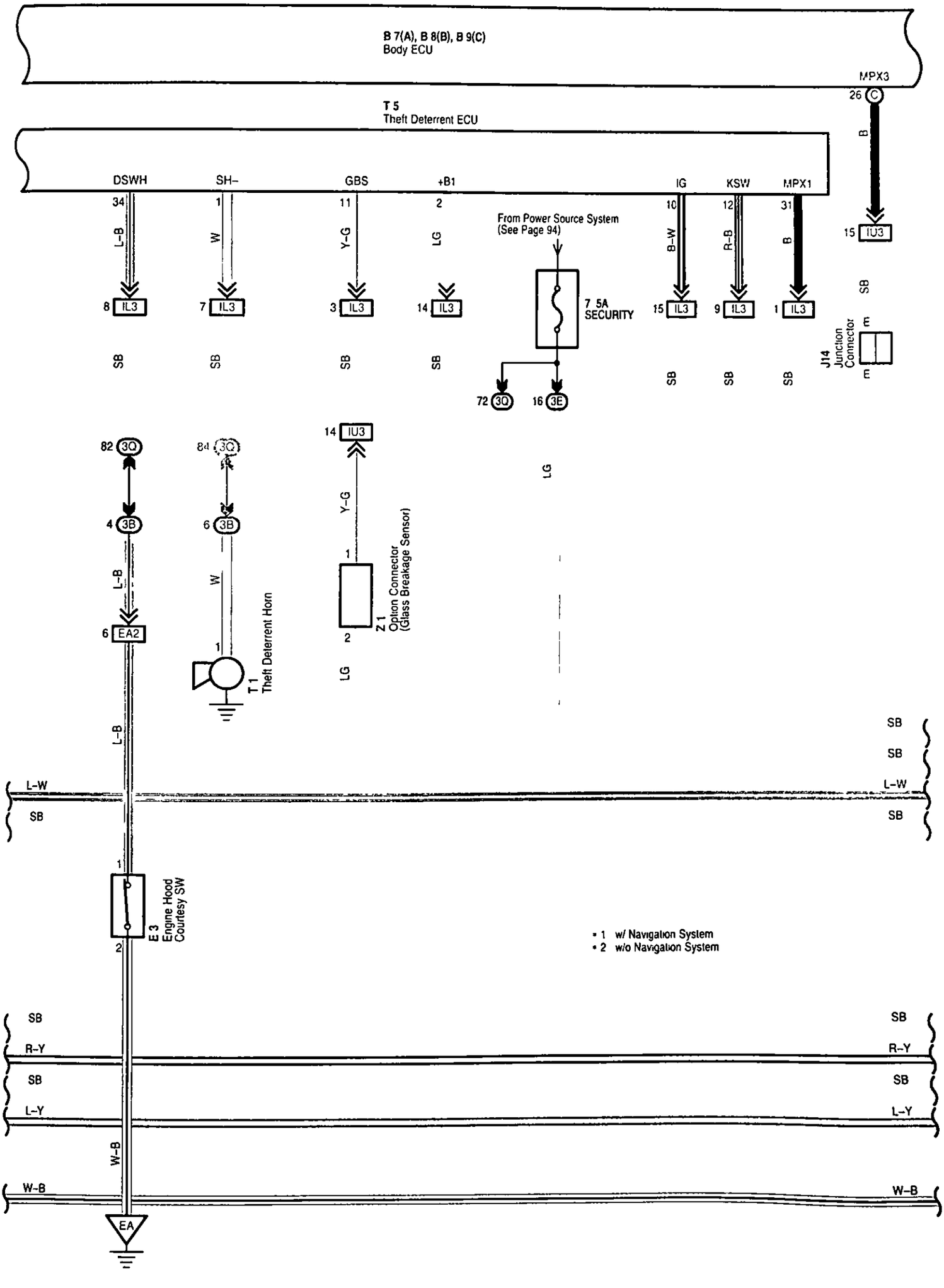
B 7(A), B 8(B), B 9(C)
Body ECU
MPX3
26 C
B
T 5
Theft Deterrent ECU
DSWH
SH–
GBS
+B1
IG
KSW
MPX1
34
1
11
2
10
12
31
L–B
W
Y–G
LG
B–W
R–B
B
8 IL3
7 IL3
3 IL3
14 IL3
15 IL3
9 IL3
1 IL3
15 IU3
SB
From Power Source System
(See Page 94)
7.5A
SECURITY
72 3Q
16 3E
J14
Junction
Connector
E
82 3Q
84 3Q
14 IU3
4 3B
6 3B
6 EA2
1
2
Z1
Option Connector
(Glass Breakage Sensor)
T1
Theft Deterrent Horn
L–W
SB
1
2
E3
Engine Hood
Courtesy SW
R–Y
L–Y
W–B
EA
• 1 w/ Navigation System
• 2 w/o Navigation System

Multiplex Communication System

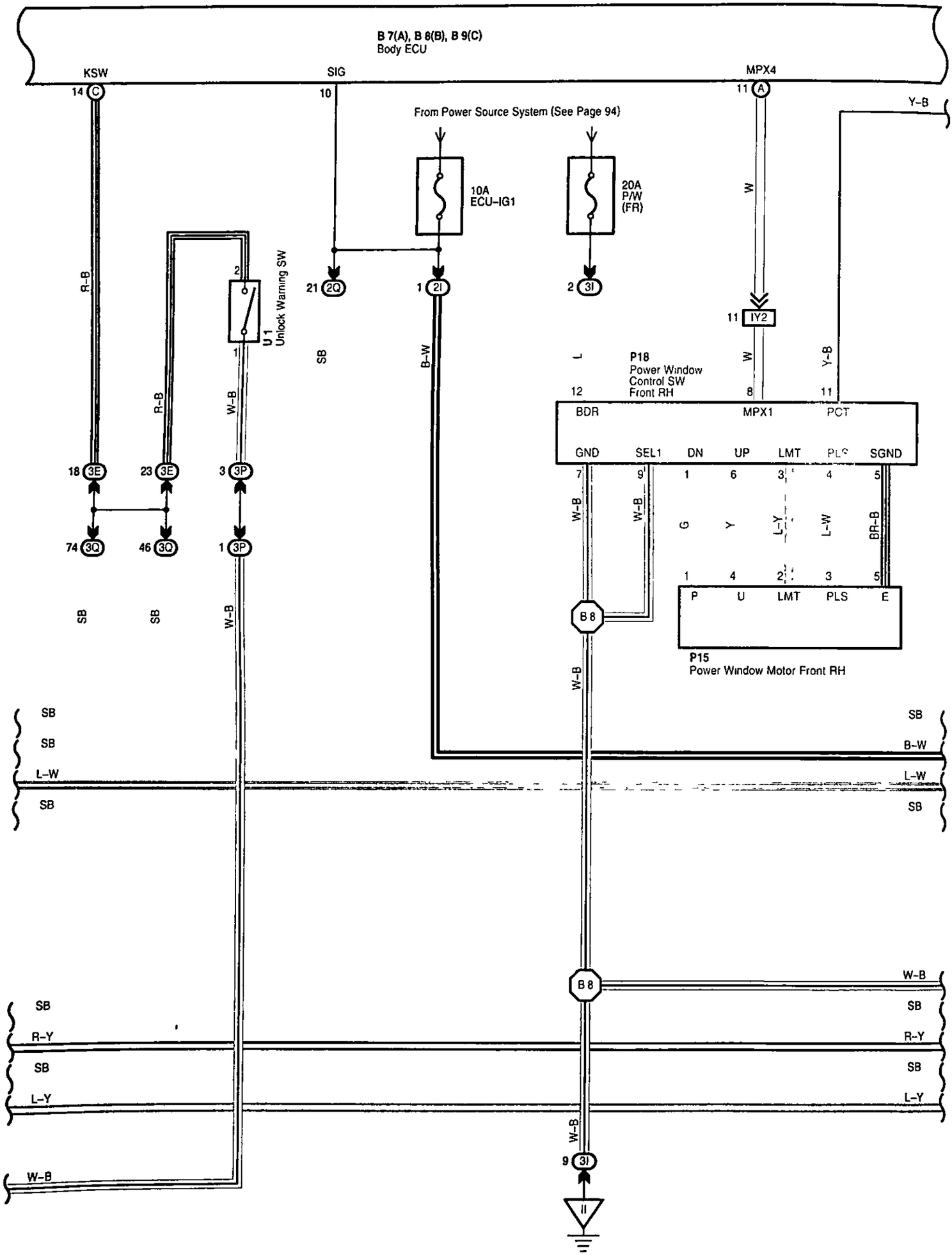

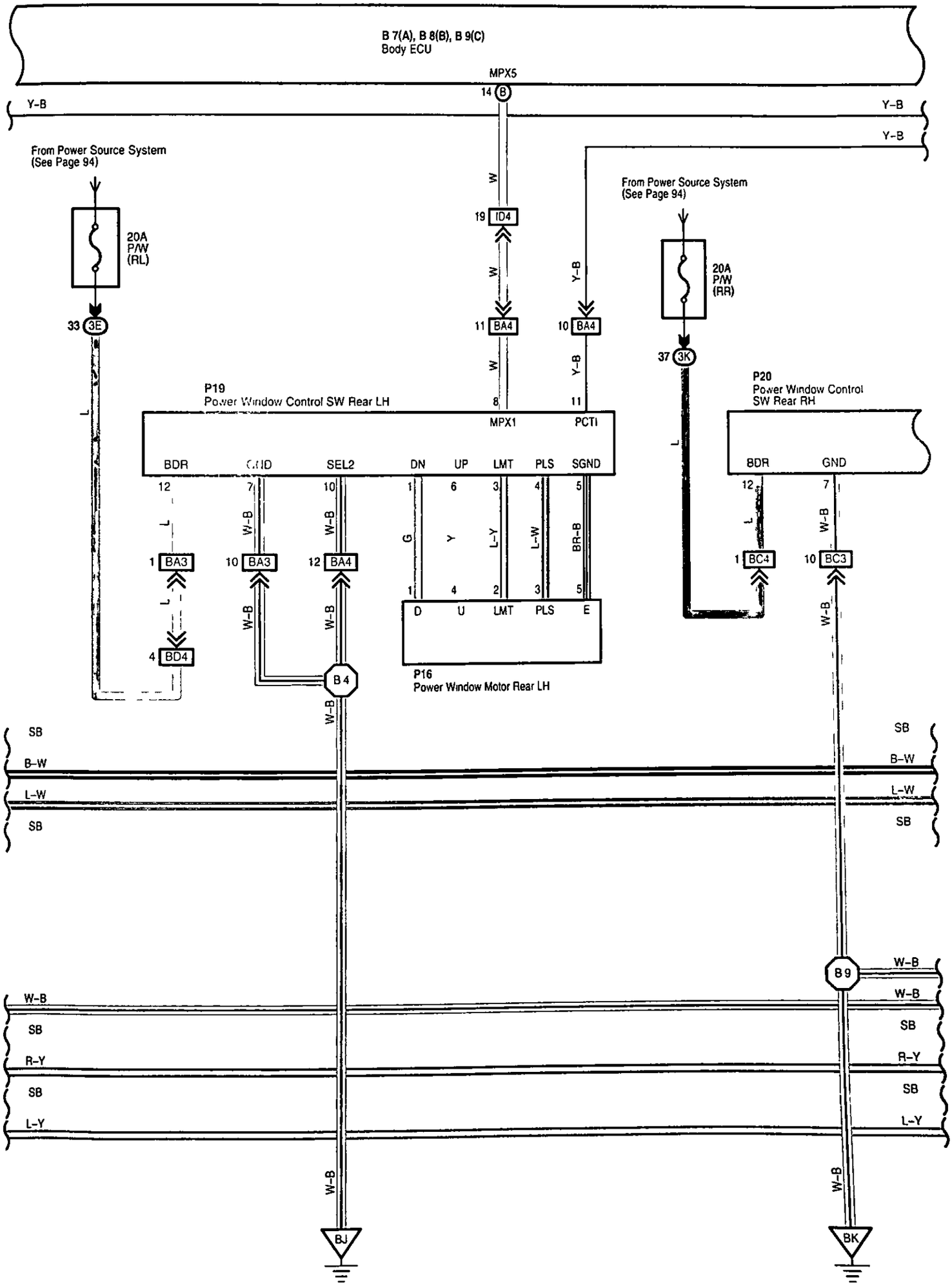
B 7(A), B 8(B), B 9(C)
Body ECU
MPX5
14 B
Y-B
Y-B
Y-B
From Power Source System
(See Page 94)
20A
P/W
(RL)
33 3E
W
19 ID4
W
11 BA4
W
8
Y-B
10 BA4
Y-B
11
From Power Source System
(See Page 94)
20A
P/W
(RR)
37 3K
P19
Power Window Control SW Rear LH
MPX1
PCTI
BDR
GND
SEL2
DN
UP
LMT
PLS
SGND
12
7
10
1
6
3
4
5
L
W-B
W-B
G
Y
L-Y
L-W
BR-B
1 BA3
10 BA3
12 BA4
L
W-B
W-B
4 BD4
B 4
1
4
2
3
5
D
U
LMT
PLS
E
P16
Power Window Motor Rear LH
P20
Power Window Control
SW Rear RH
BDR
GND
12
7
L
W-B
1 BC4
10 BC3
W-B
SB
B-W
L-W
SB
SB
B-W
L-W
SB
B 9
W-B
W-B
W-B
SB
R-Y
SB
L-Y
SB
R-Y
SB
L-Y
W-B
W-B
BJ
BK

Multiplex Communication System

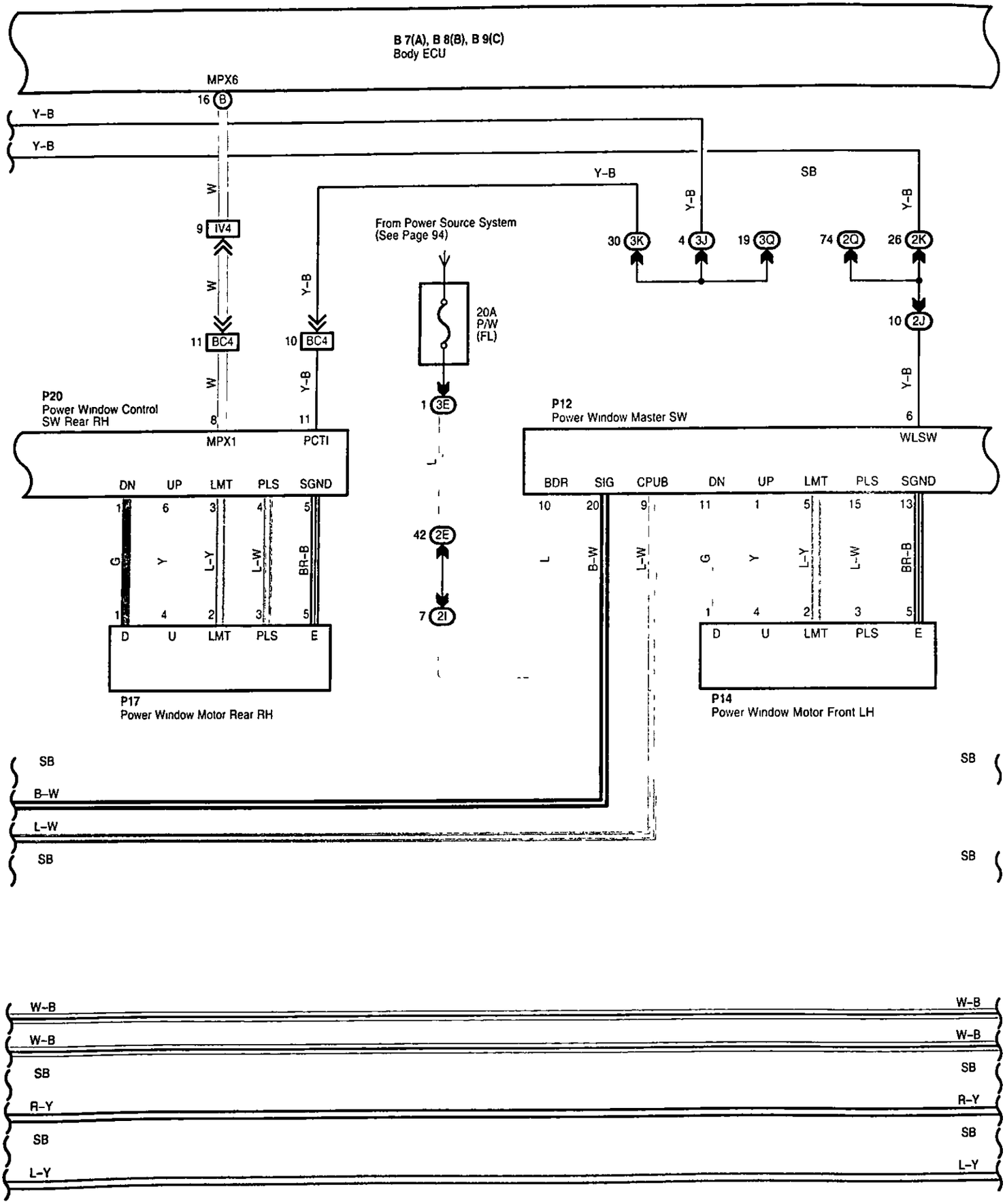

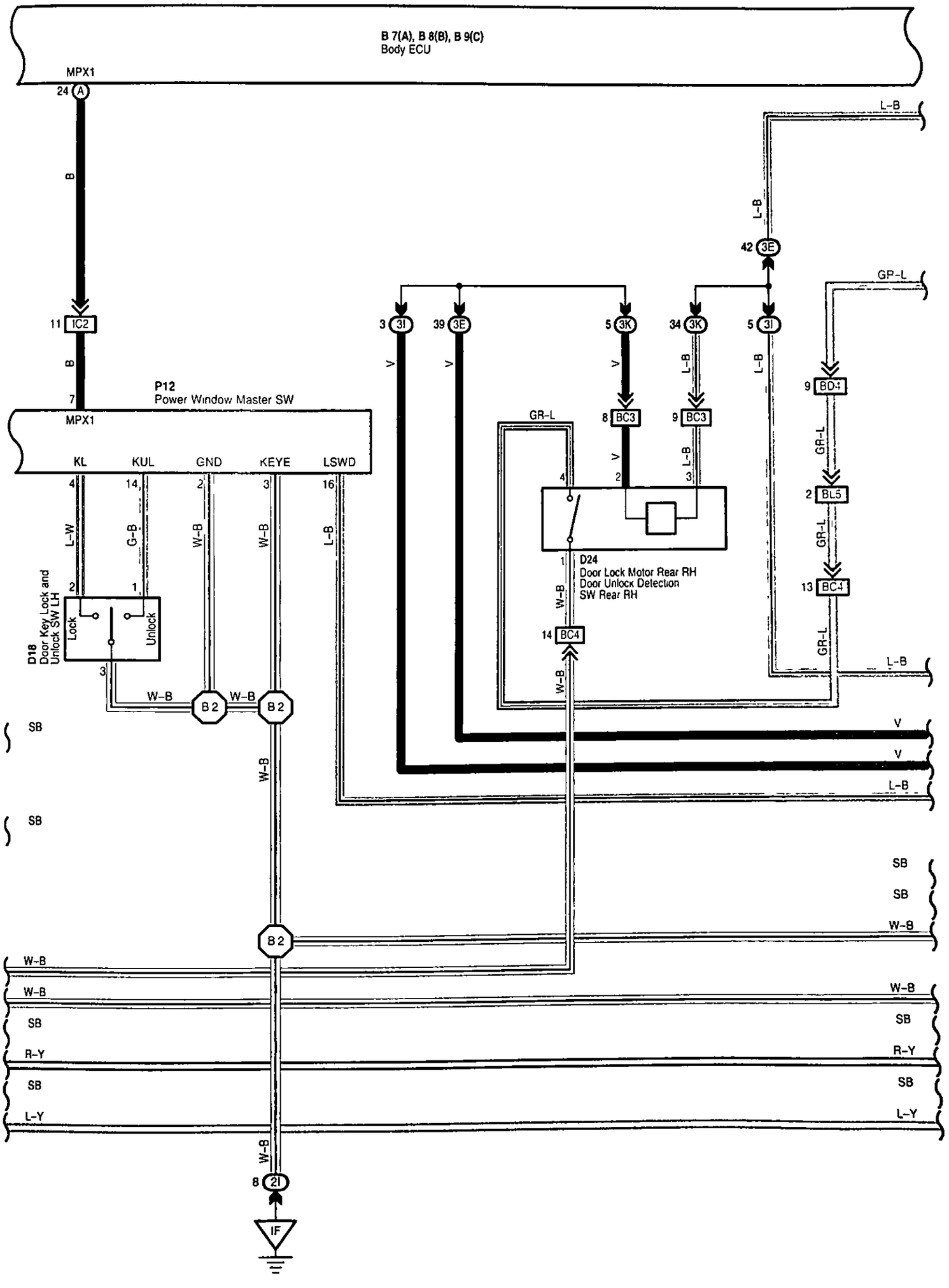
B 7(A), B 8(B), B 9(C)
Body ECU
MPX1
24 A
B
11 IC2
B
7
P12
Power Window Master SW
MPX1
KL
KUL
GND
KEYE
LSWD
4
14
2
3
16
L-W
G-B
W-B
W-B
L-B
D18
Door Key Lock and
Unlock SW LH
Lock
Unlock
2
1
3
W-B
W-B
B2
B2
SB
SB
W-B
B2
W-B
W-B
SB
R-Y
SB
L-Y
W-B
8 2I
IF
3 3I
39 3E
5 3K
34 3K
5 3I
42 3E
L-B
L-B
GP-L
V
V
V
L-B
L-B
9 BD4
GR-L
2 BL5
GR-L
13 BC4
GR-L
L-B
8 BC3
9 BC3
GR-L
4
2
3
1
D24
Door Lock Motor Rear RH
Door Unlock Detection
SW Rear RH
W-B
14 BC4
W-B
V
V
L-B
SB
SB
W-B
W-B
SB
R-Y
SB
L-Y

Multiplex Communication System

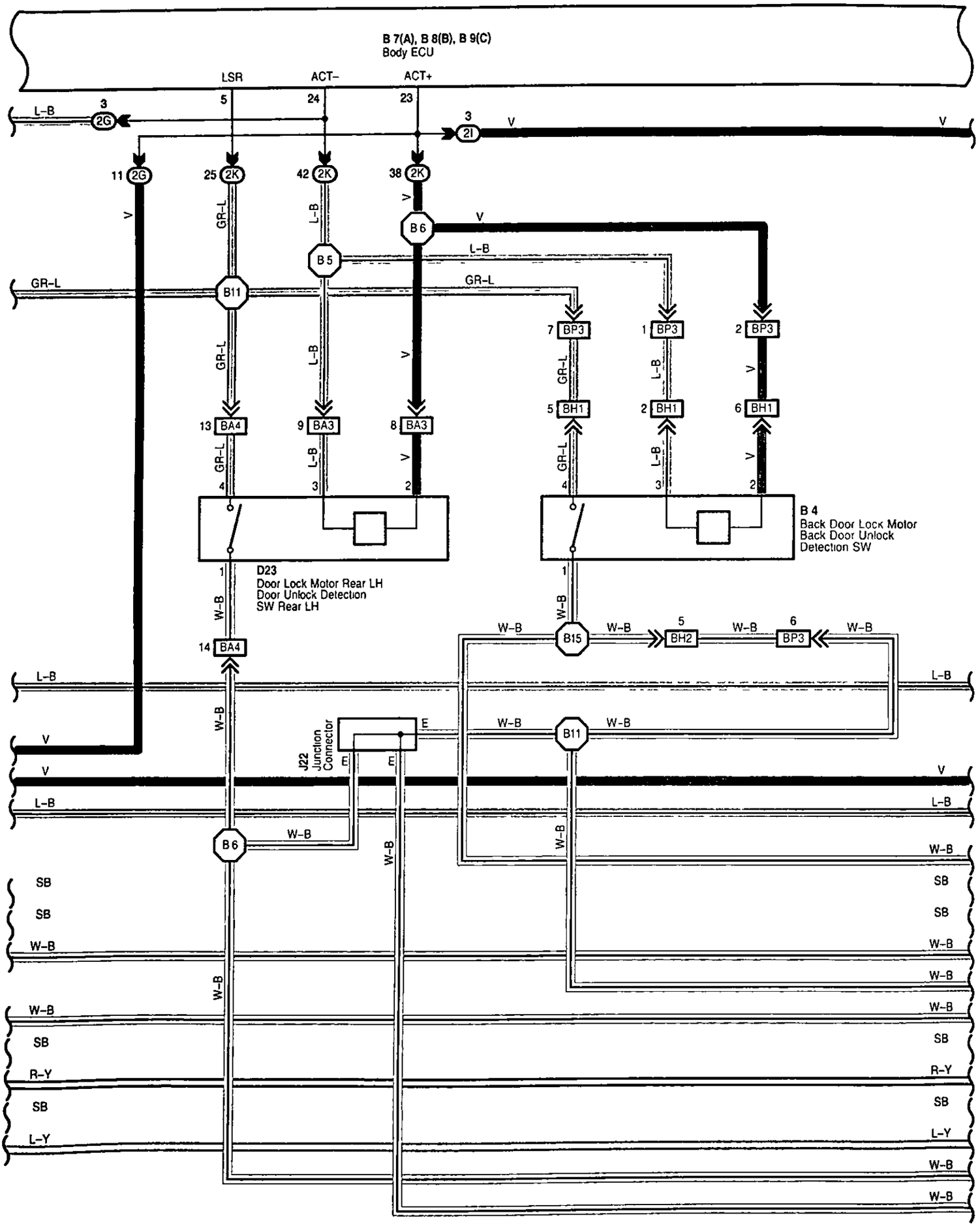

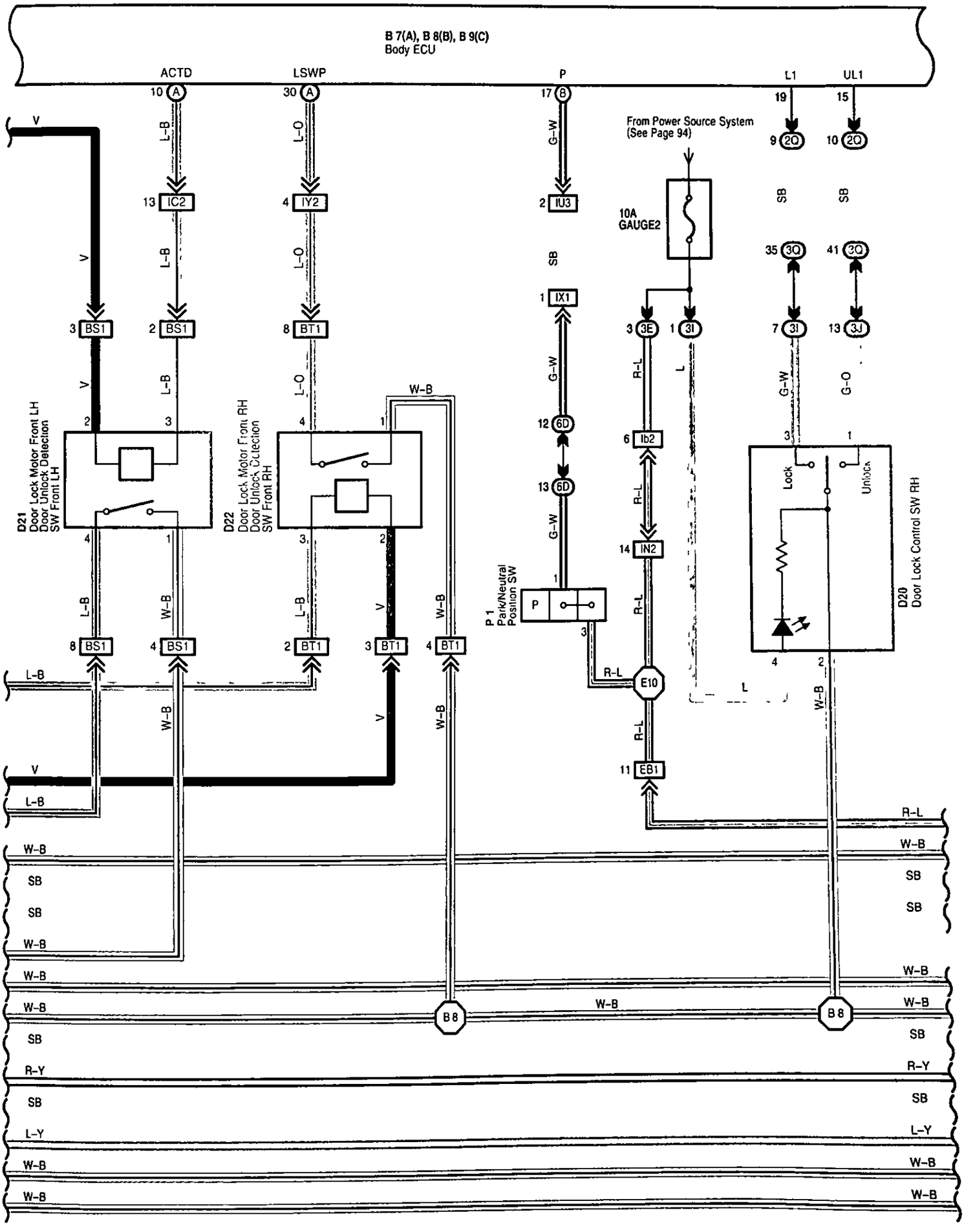
B 7(A), B 8(B), B 9(C)
Body ECU
ACTD
LSWP
P
L1
UL1
From Power Source System
(See Page 94)
10A
GAUGE2
D21
Door Lock Motor Front LH
Door Unlock Detection
SW Front LH
D22
Door Lock Motor Front RH
Door Unlock Detection
SW Front RH
P 1
Park/Neutral
Position SW
D20
Door Lock Control SW RH
Lock
Unlock
B 8
B 8

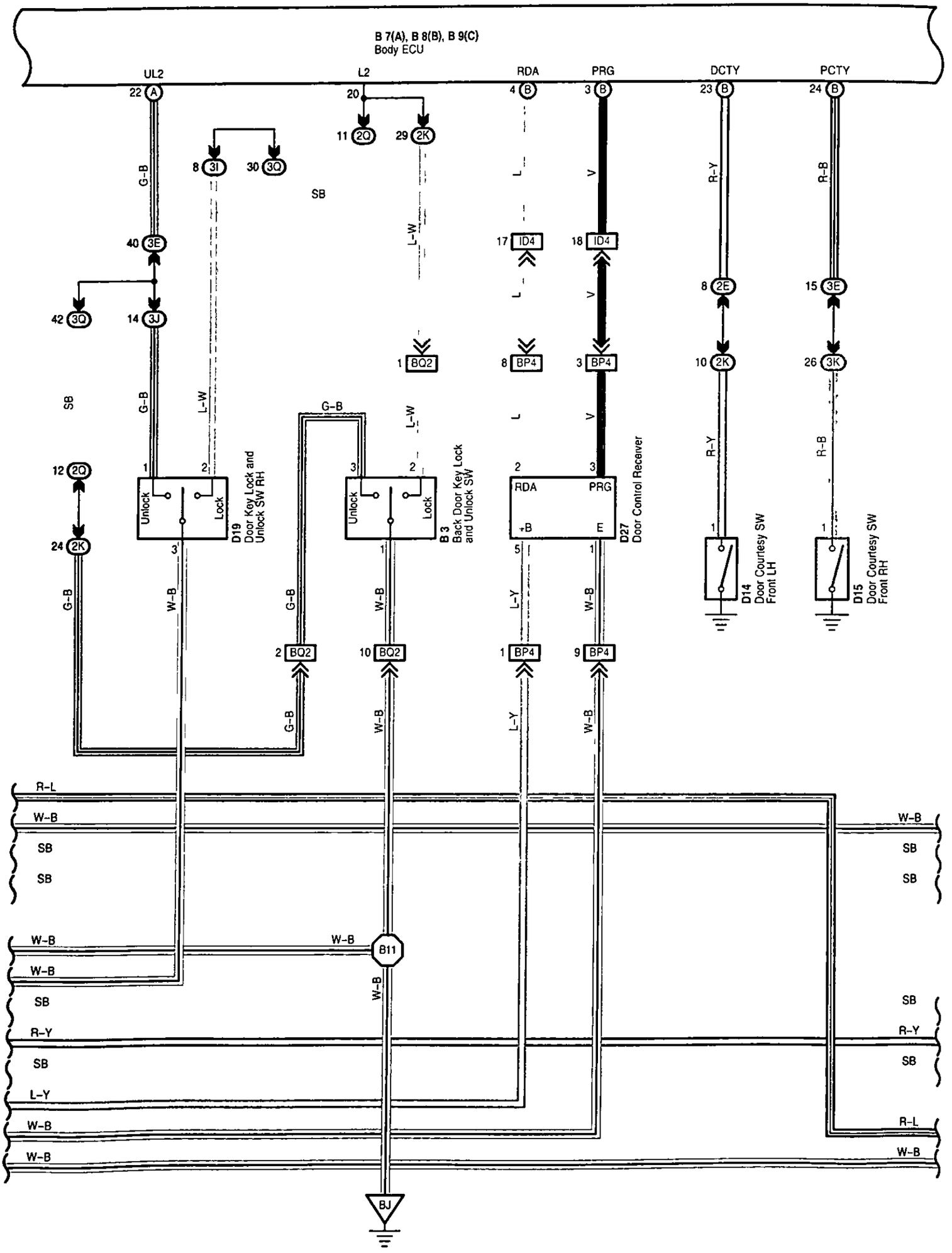
B 7(A), B 8(B), B 9(C)
Body ECU
UL2
L2
RDA
PRG
DCTY
PCTY
22 A
20
4 B
3 B
23 B
24 B
11 2Q
29 2K
8 3I
30 3Q
40 3E
42 3Q
14 3J
17 ID4
18 ID4
8 2E
15 3E
1 BQ2
8 BP4
3 BP4
10 2K
26 3K
12 2Q
24 2K
D19
Door Key Lock and
Unlock SW RH
B3
Back Door Key Lock
and Unlock SW
D27
Door Control Receiver
RDA
PRG
+B
E
D14
Door Courtesy SW
Front LH
D15
Door Courtesy SW
Front RH
Unlock
Lock
2 BQ2
10 BQ2
1 BP4
9 BP4
5
1
B11
BJ
G-B
L-W
SB
W-B
L
V
L-Y
R-Y
R-B
R-L

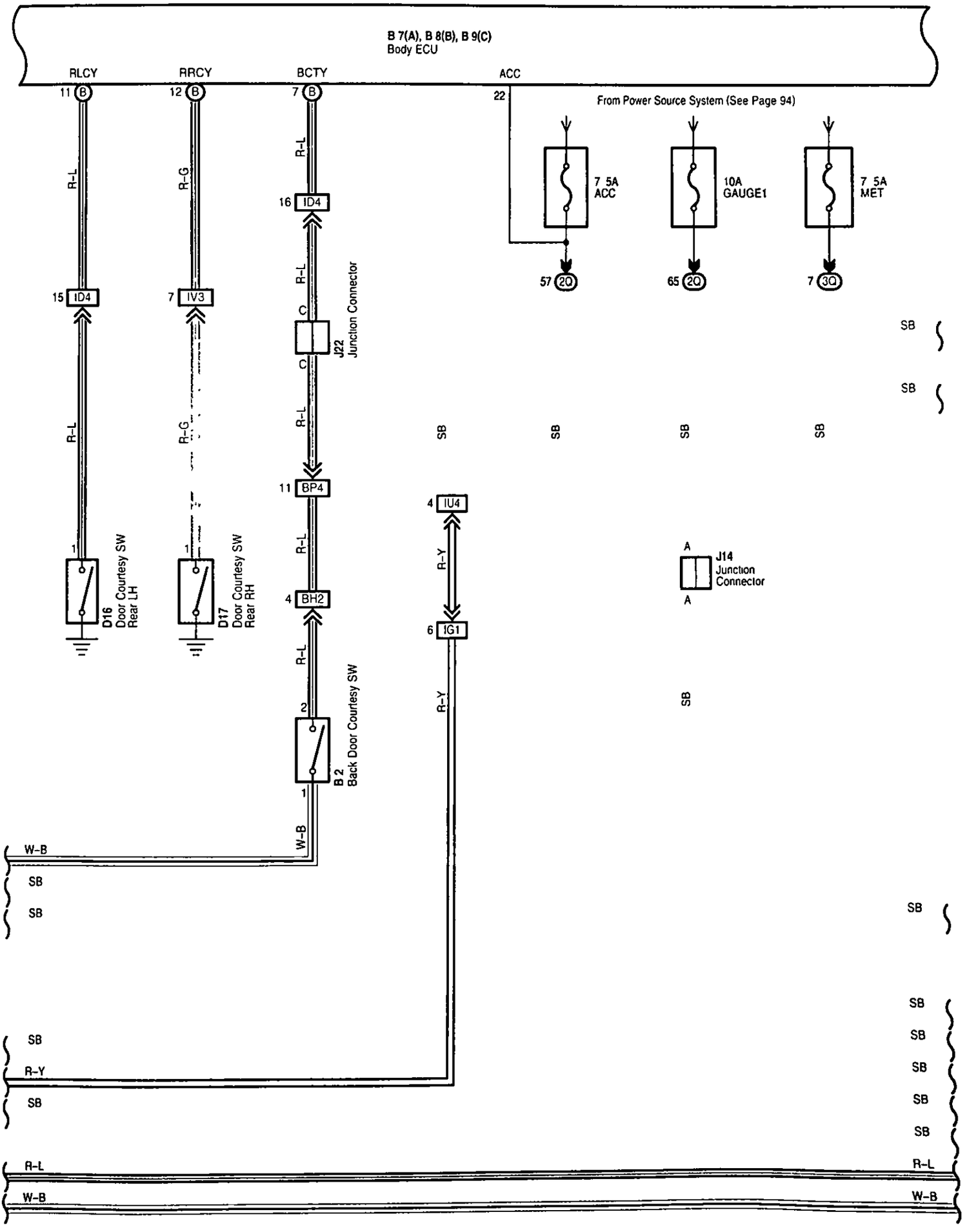
B 7(A), B 8(B), B 9(C)
Body ECU
RLCY
RRCY
BCTY
ACC
11 B
12 B
7 B
22
From Power Source System (See Page 94)
7 5A
ACC
10A
GAUGE1
7 5A
MET
57 2Q
65 2Q
7 3Q
R-L
R-G
16 ID4
15 ID4
7 IV3
C
J22
Junction Connector
11 BP4
4 BH2
2
1
B 2
Back Door Courtesy SW
4 IU4
6 IG1
R-Y
A
J14
Junction
Connector
D16
Door Courtesy SW
Rear LH
D17
Door Courtesy SW
Rear RH
SB
W-B

Multiplex Communication System

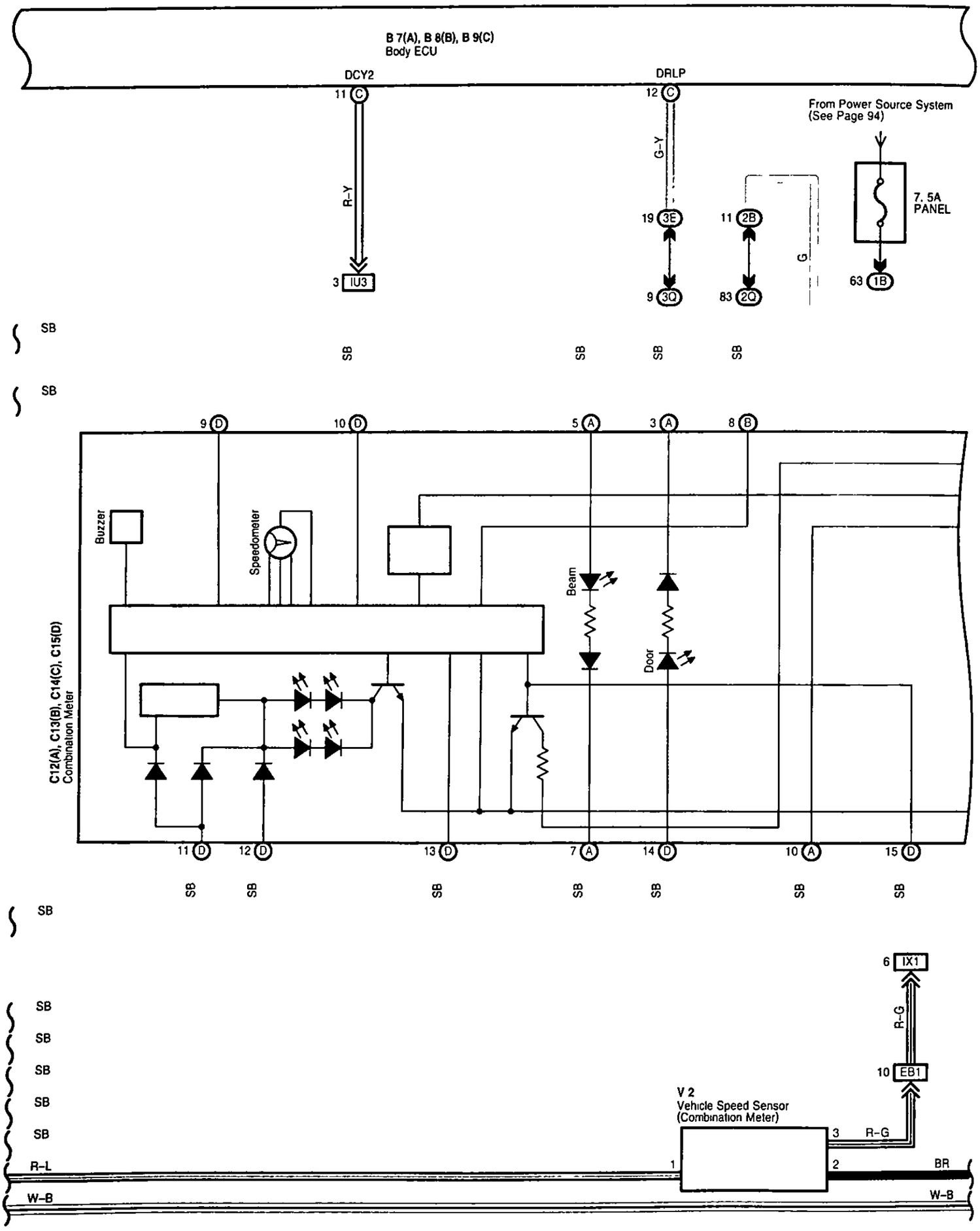

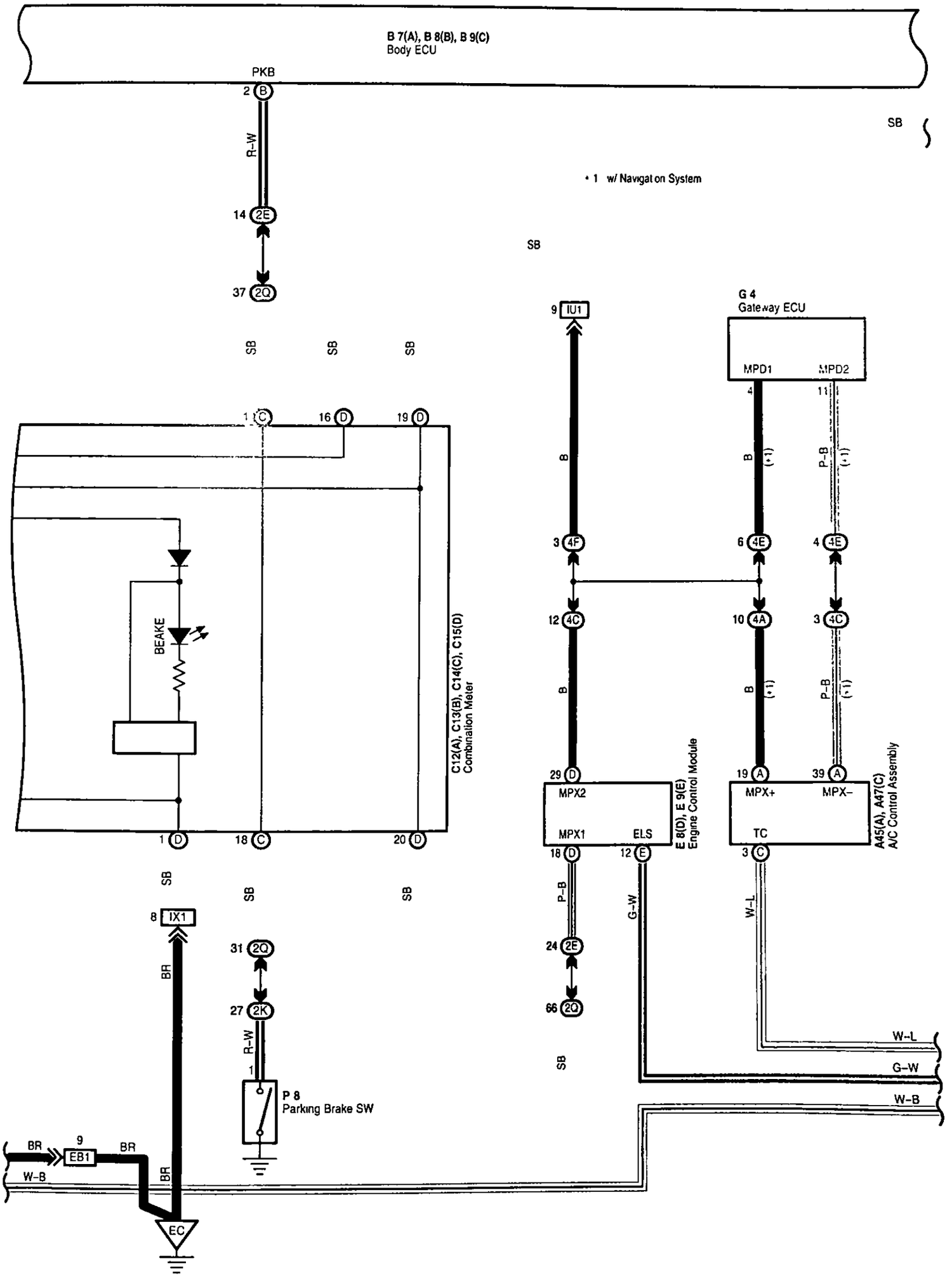
B 7(A), B 8(B), B 9(C)
Body ECU
PKB
2 B
R-W
14 2E
37 2Q
SB
• 1 w/ Navigation System
G 4
Gateway ECU
9 IU1
MPD1
MPD2
4
11
B
P-B
(•1)
3 4F
6 4E
4 4E
12 4C
10 4A
3 4C
29 D
19 A
39 A
MPX2
MPX1
ELS
MPX+
MPX-
TC
18 D
12 E
3 C
E 8(D), E 9(E)
Engine Control Module
A45(A), A47(C)
A/C Control Assembly
G-W
W-L
24 2E
66 2Q
1 C
16 D
19 D
1 D
18 C
20 D
BEAKE
C12(A), C13(B), C14(C), C15(D)
Combination Meter
8 IX1
BR
31 2Q
27 2K
R-W
1
P 8
Parking Brake SW
W-B
9
EB1
EC

Multiplex Communication System

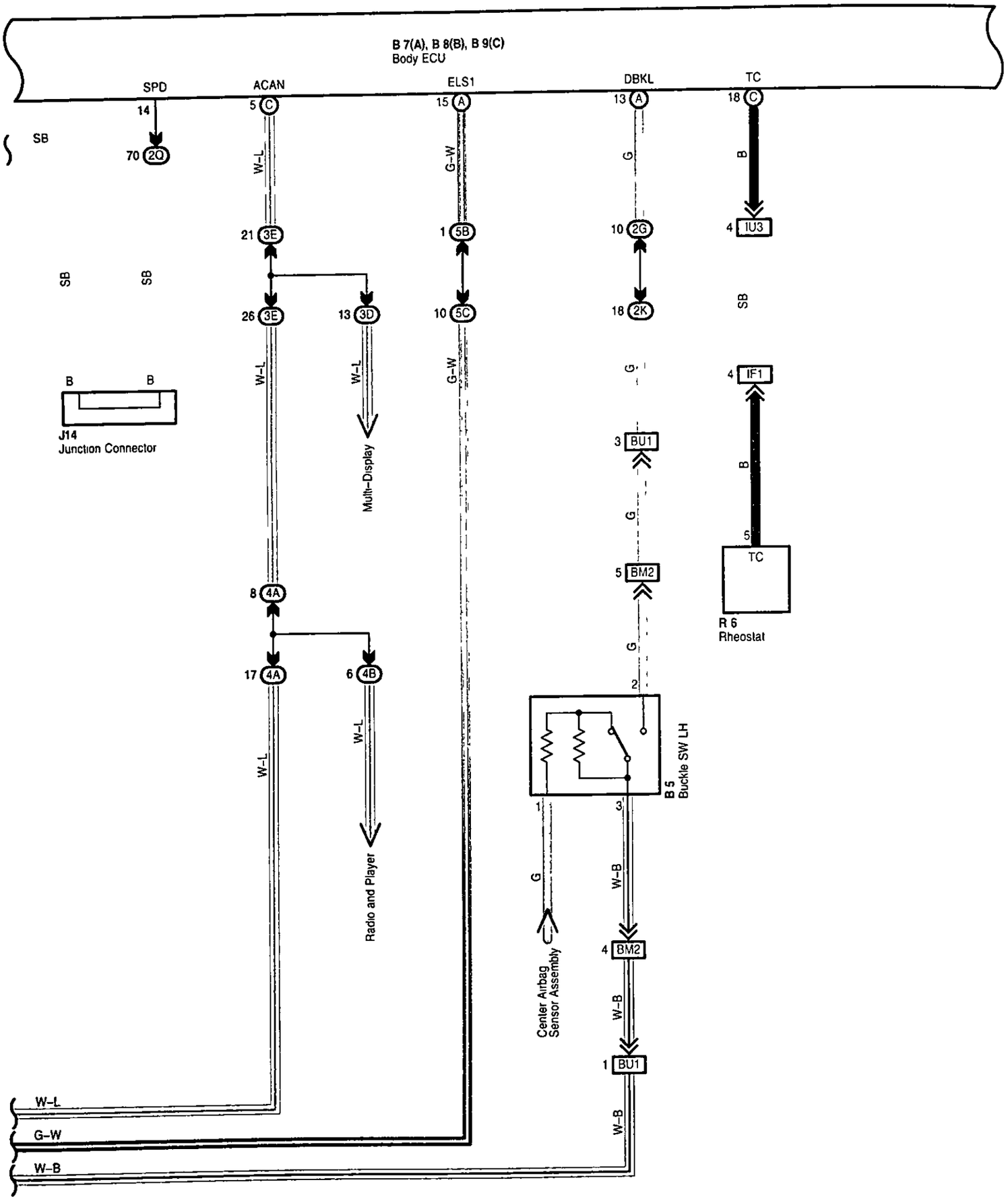

From Power Source System (See Page 94)

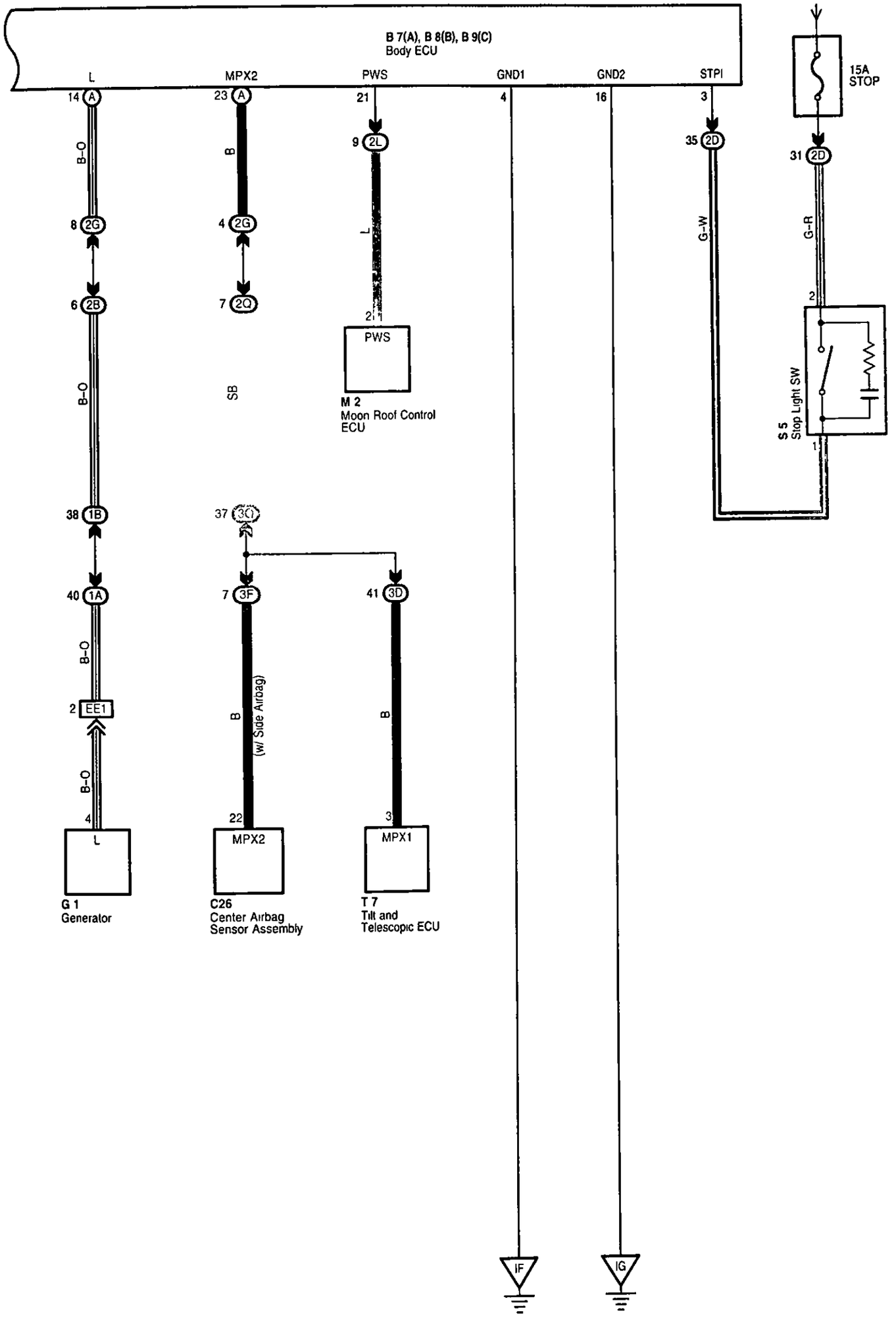

Multiplex Communication System

System Outline

The multiplex communication system communicates among the body ECU, theft deterrent ECU, power window master SW, power window control SW front RH, power window control SW rear LH, power window control SW rear RH, center airbag sensor assembly and tilt and telescopic ECU, among the combination meter, engine control module, A/C control assembly and gateway ECU and controls the following systems according to the signals from respective sensors or switches.
For details, please refer to the new car features and/or the repair manual

Service Hints

Body ECU

11, 12-Ground : Always approx. 12 volts
22-Ground : Approx 12 volts with ignition SW at ACC or ON position
10-Ground : Approx. 12 volts with ignition SW at ON or ST position
4, 16-Ground : Always continuity

○ : **Parts Location**

Code	See Page	Code	See Page	Code	See Page
A31	70	D19	72	M2	72
A45 A	70	D20	72	M5 A	71
A47 C	70	D21	72	M8 C	71
B2	72	D22	72	M9 B	71
B3	72	D23	72	P1	69
B4	72	D24	72	P8	73
B5	74	D27	72	P12	73
B7 A	70	E3	68	P14	73
B8 B	70	E8 D	70	P15	73
B9 C	70	E9 E	70	P16	73
C12 A	70	F1	68	P17	73
C13 B	70	F2	68	P18	73
C14 C	70	F10	72	P19	73
C15 D	70	F11	72	P20	73
C16	70	F15	68	R6	71
C26	70	G1	68	R27	73
D2 A	68	G4	70	S5	71
D3 B	68	H1	69	T1	69
D7	70	H2	69	T5	71
D10	72	H3	69	T7	71
D11	72	H4	69	T10	71
D12	72	J3	71	U1	71
D13	72	J6	71	V2	69
D14	72	J9	71	V6	73
D15	72	J10	71	V7	73
D16	72	J13	71	Z1	71
D17	72	J14	71		
D18	72	J22	72		

⬭ : Junction Block and Wire Harness Connector

Code	See Page	Junction Block and Wire Harness (Connector Location)
1A	24	Engine Room Main Wire and Engine Room J/B (Engine Compartment Left)
1B	24	Engine Room No 2 Wire and Engine Room J/B (Engine Compartment Left)
1C		
2A	28	Engine Room No 2 Wire and Cowl Side J/B LH (Left Kick Panel)
2B		
2D	28	Dash Wire and Cowl Side J/B LH (Left Kick Panel)
2E		
2G		
2I	28	Front Door LH Wire and Cowl Side J/B LH (Left Kick Panel)
2J		
2K	28	Floor No 1 Wire and Cowl Side J/B LH (Left Kick Panel)
2L	28	Roof No 1 Wire and Cowl Side J/B LH (Left Kick Panel)
2Q	30	Instrument Panel Integration Wire and Cowl Side J/B LH (Left Kick Panel)
3B	40	Engine Room No 2 Wire and Cowl Side J/B RH (Right Kick Panel)
3D	40	Dash Wire and Cowl Side J/B RH (Right Kick Panel)
3E		
3F		
3I	40	Front Door RH Wire and Cowl Side J/B RH (Right Kick Panel)
3J		
3K	40	Floor No 2 Wire and Cowl Side J/B RH (Right Kick Panel)
3P	43	Dash Wire and Cowl Side J/B RH (Right Kick Panel)
3Q	42	Instrument Panel Integration Wire and Cowl Side J/B RH (Right Kick Panel)
4A	52	Dash Wire and J/B No.4 (Instrument Panel Center)
4B		
4C		
4D		
4E		
4F		
5B	56	Dash Wire and J/B No.5 (Behind the Combination Meter)
5C		
5D	56	Engine Room No 2 Wire and J/B No 5 (Behind the Combination Meter)
6D	60	Engine Wire and J/B No 6 (Behind the Grove Box)
7B	64	Dash Wire and J/B No 7 (Behind the Grove Box)

: Connector Joining Wire Harness and Wire Harness

Code	See Page	Joining Wire Harness and Wire Harness (Connector Location)
EA2	76	Engine Room Main Wire and Engine Room No 2 Wire (Engine Compartment Right)
EB1	76	Engine Wire and Transmission Wire (On the Transmission)
EE1	76	Engine Room Main Wire and Alternator Wire (Near the Battery)
IC2	78	Front Door LH Wire and Dash Wire (Left Kick Panel)
ID4	78	Dash Wire and Floor No 1 Wire (Left Kick Panel)
IF1	78	Instrument Panel Integration Wire and Instrument Panel Wire (Left Side of Instrument Panel)
IG1	78	Engine Room No 2 Wire and Dash Wire (Behind the Combination Meter)
IH2	80	Instrument Panel Integration Wire and Column Wire (Near the Ignition SW)
II3	80	Dash Wire and Column Wire (Near the Ignition SW)
II5		
IL3	80	Instrument Panel Integration Wire and Computer Wire (Instrument Panel Center)
IM2	80	Instrument Panel Integration Wire and Instrument Panel No 3 Wire (Right Side of Instrument Panel)
IN2	80	Engine Wire and Dash Wire (Behind the Glove Box)
IU1	82	Instrument Panel Integration Wire and Dash Wire (Behind the Glove Box)
IU3		
IU4		
IV3	82	Dash Wire and Floor No 2 Wire (Right Kick Panel)
IV4		
IX1	82	Instrument Panel Integration Wire and Engine Wire (Behind the Glove Box)
IY2	82	Front Door RH Wire and Dash Wire (Right Kick Panel)
Ib2	84	Dash Wire and Dash Wire (Behind the Combination Meter)
BA3	86	Rear Door LH Wire and Floor No 1 Wire (Left Side of Center Pillar)
BA4		
BC3	86	Rear Door RH Wire and Floor No 2 Wire (Right Side of Center Pillar)
BC4		
BD4	86	Floor No.3 Wire and Floor No.1 Wire (Left Rear Side Quarter Panel)
BH1	86	Pillar No.1 Wire and Back Door Upper Wire (Left Side of Back Door)
BH2		
BL5	88	Floor No.2 Wire and Floor No.3 Wire (Right Side of Rear Floor Crossmember)
BM2	90	Floor No.1 Wire and Front Seat LH Wire (Front Side Under the Driver's Seat)
BP3	88	Pillar No.1 Wire and Floor No.1 Wire (Left Rear Side Quarter Panel)
BP4		
BQ2	88	Back Door Lower Wire and Floor No 1 Wire (Left Rear Side Quarter Panel)
BR1	88	Roof No.3 Wire and Roof No.1 Wire (Front Side of Roof)
BS1	88	Door Lock LH Sub Wire and Front Door LH Wire (Front Door LH)
BT1	88	Door Lock RH Sub Wire and Front Door RH Wire (Front Door RH)
BU1	88	Floor No.1 Wire and Floor No.1 Wire (Near the Left Rear Suspension Support)

: Ground Points

Code	See Page	Ground Points Location
EA	76	Front Right Side of Fender Apron
EC	76	Rear Bank of Right Cylinder Head
IF	78	Set Bolt of Cowl Side J/B LH
IG		
II	78	Set Bolt of Cowl Side J/B RH
BJ	86	Under the Driver's Seat
BK	86	Front Side Under the Front Passenger's Seat

: **Splice Points**

Code	See Page	Wire Harness with Splice Points	Code	See Page	Wire Harness with Splice Points
E1	76	Engine Room Main Wire	B6	88	Floor No 1 Wire
E2			B7	88	Roof Wire
E10	76	Engine Wire	B8	88	Front Door RH Wire
E15	76	Engine Room Main Wire	B9	88	Floor No 2 Wire
B2	88	Front Door LH Wire	B11	88	Floor No 1 Wire
B4	88	Floor No 1 Wire	B15	88	Back Door Upper Wire
B5					

Front Wiper and Washer

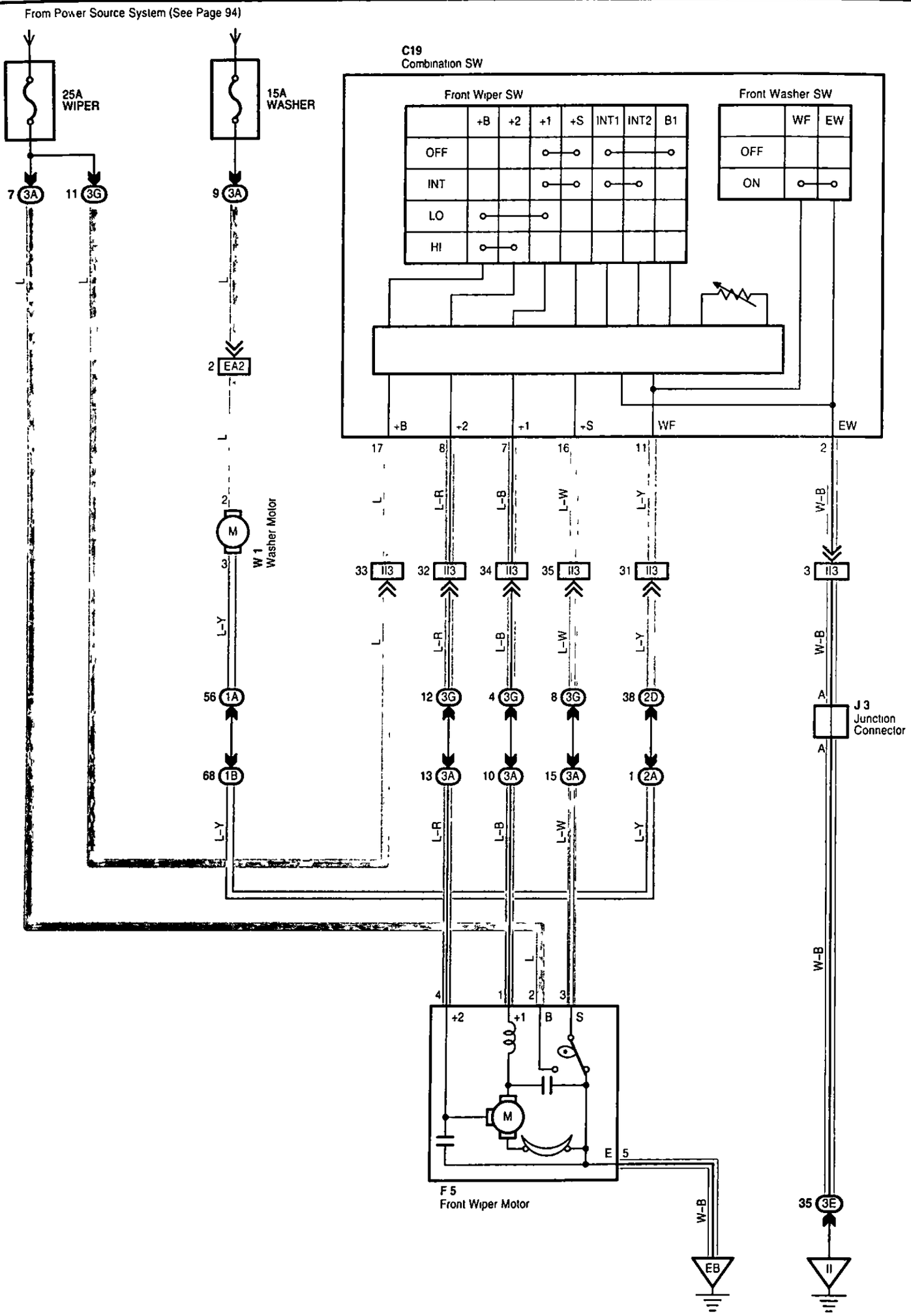

System Outline

When the ignition SW turned on, the current from the WIPER fuse flows to the front wiper and washer SW TERMINAL 17, and the front wiper motor TERMINAL 2.

1. Low Position

When the front wiper SW is turned to LO position, the current flows from the front wiper and washer SW TERMINAL 17 to TERMINAL 7 to the front wiper motor TERMINAL 1 to TERMINAL 5 to GROUND, and operates the front wiper motor at low speed.

2. High Position

When the front wiper SW is turned to HI position, the current flows from the front wiper and washer SW TERMINAL 17 to TERMINAL 8 to the front wiper motor TERMINAL 4 to TERMINAL 5 to GROUND, and operates the front wiper motor at high speed.

3. INT Position

When the front wiper SW is turned to INT position, the relay operates and the current which is connected by the relay function flows from the front wiper and washer SW TERMINAL 17 to TERMINAL 2 to GROUND, and operates the wipe
The intermittent operation is controlled by the charge/discharge function of the condenser installed in the relay, and the intermittent time is controlled by a time control SW to change the charging time of the condenser.

4. Washer Interlocking Operation

When the front washer SW is pulled up, the current flows from the washer motor TERMINAL 2 to TERMINAL 3 to the front wiper and washer SW TERMINAL 11 to TERMINAL 2 to GROUND, operates the washer motor and the window washer emits a water spray This causes the current to flow to the washer continuous operation circuit in the front wiper and washer SW TERMINAL 11 to TERMINAL 7 to front wiper motor TERMINAL 1 to TERMINAL 5 to GROUND, and operates the wiper.

Service Hints

C19 Combination SW

17-Ground : Approx. 12 volts with ignition SW at ON or ST position
7-Ground : Approx. 12 volts with front wiper and washer SW at LO position
: Approx. 12 volts 1.6 to 10.7 seconds intermittently with the front wiper and washer SW at INT position
16-Ground . Approx. 12 volts with ignition SW on unless the front wiper motor at STOP position
8-Ground : Approx. 12 volts with front wiper and washer SW at HI position
2-Ground : Always continuity

F5 Front Wiper Motor

2-Ground : Approx. 12 volts with ignition SW at ON or ST position
5-Ground : Always continuity

○ : Parts Location

Code	See Page	Code	See Page	Code	See Page
C19	70	J3	71		
F5	68	W1	69		

⬭ : Junction Block and Wire Harness Connector

Code	See Page	Junction Block and Wire Harness (Connector Location)
1A	24	Engine Room Main Wire and Engine Room J/B (Engine Compartment Left)
1B	24	Engine Room No.2 Wire and Engine Room J/B (Engine Compartment Left)
2A	28	Engine Room No 2 Wire and Cowl Side J/B LH (Left Kick Panel)
2D	28	Dash Wire and Cowl Side J/B LH (Left Kick Panel)
3A	40	Engine Room No 2 Wire and Cowl Side J/B RH (Right Kick Panel)
3E	40	Dash Wire and Cowl Side J/B RH (Right Kick Panel)
3G		

□ : Connector Joining Wire Harness and Wire Harness

Code	See Page	Joining Wire Harness and Wire Harness (Connector Location)
EA2	76	Engine Room Main Wire and Engine Room No.2 Wire (Engine Compartment Right)
II3	80	Dash Wire and Column Wire (Near the Ignition SW)

Front Wiper and Washer

▽ : **Ground Points**

Code	See Page	Ground Points Location
EB	76	Front Right Side of Fender Apron
II	78	Set Bolt of Cowl Side J/B RH

Rear Wiper and Washer

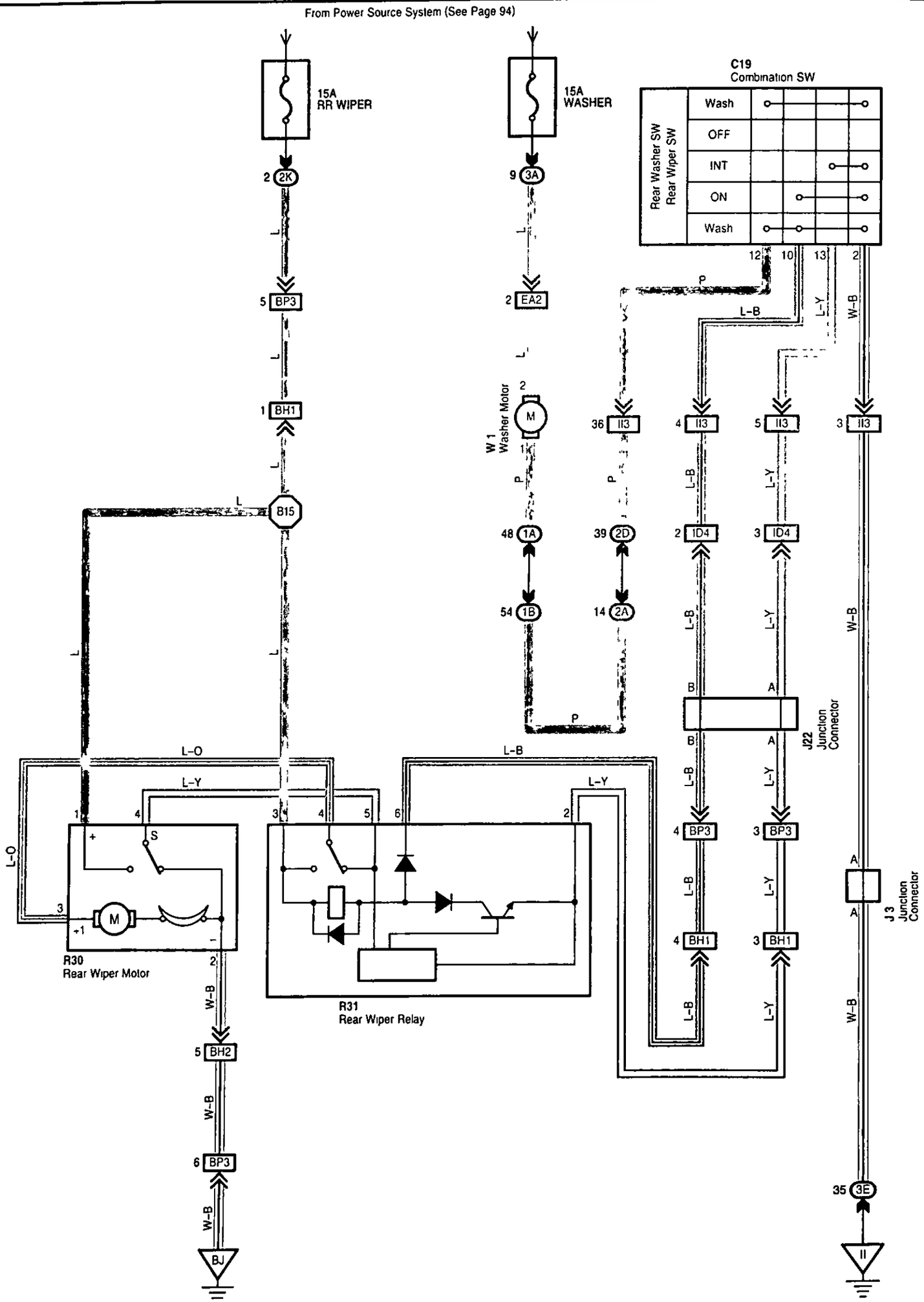

System Outline

When the ignition SW is turned on, the current flows from the WASHER fuse to washer motor TERMINAL 2, and the current flows from the RR WIPER fuse to rear wiper relay TERMINAL 3, and the rear wiper motor TERMINAL 1 respectively.

1. Rear Wiper Normal Operation

When the ignition SW is turned on, and the rear wiper and washer SW is turned to ON position, the current flows from the rear wiper relay TERMINAL 3 to TERMINAL (A) 6 to the rear wiper and washer SW TERMINAL 10 to TERMINAL 2 to GROUND, and turns on the rear wiper relay. As a result, the current flows from the rear wiper relay TERMINAL 3 to TERMINAL 4 to the rear wiper motor TERMINAL 3 to TERMINAL 2 to GROUND, and operates the rear wiper.

2. Rear Wiper Intermittent Operation

When the ignition SW is turned on, and the rear wiper and washer SW is turned to INT position, the current flows from the rear wiper relay TERMINAL 3 to TERMINAL 2 to the rear wiper and washer SW TERMINAL 13 to TERMINAL 2 to GROUND, and the intermittent circuit in the rear wiper relay is controlled to operate the wiper intermittently.

3. Washer Operation

When the ignition SW is turned on, and the rear wiper and washer SW is turned from OFF to WASH position, the current flows from the WASHER fuse to the washer motor TERMINAL 2 to TERMINAL 1 to the rear wiper and washer SW TERMINAL 12 to TERMINAL 2 to GROUND. This activates the washer motor, and the window washer emits a water spray. When the rear wiper and washer SW is turned to ON position, the window washer emits a water spray during rear wiper normal operation.

Service Hints

W1 Washer Motor

2-Ground : Approx 12 volts with ignition SW at ON or ST position
1-Ground : Continuity with rear wiper and washer SW at WASH position

R30 Rear Wiper Motor

1-Ground : Approx. 12 volts with ignition SW at ON or ST position
2-Ground : Always continuity

○ : Parts Location

Code	See Page	Code	See Page	Code	See Page
C19	70	J22	72	R31	73
J3	71	R30	73	W1	69

⬭ : Junction Block and Wire Harness Connector

Code	See Page	Junction Block and Wire Harness (Connector Location)
1A	24	Engine Room Main Wire and Engine Room J/B (Engine Compartment Left)
1B	24	Engine Room No 2 Wire and Engine Room J/B (Engine Compartment Left)
2A	28	Engine Room No 2 Wire and Cowl Side J/B LH (Left Kick Panel)
2D	28	Dash Wire and Cowl Side J/B LH (Left Kick Panel)
2K	28	Floor No.1 Wire and Cowl Side J/B LH (Left Kick Panel)
3A	40	Engine Room No 2 Wire and Cowl Side J/B RH (Right Kick Panel)
3E	40	Dash Wire and Cowl Side J/B RH (Right Kick Panel)

□ : Connector Joining Wire Harness and Wire Harness

Code	See Page	Joining Wire Harness and Wire Harness (Connector Location)
EA2	76	Engine Room Main Wire and Engine Room No 2 Wire (Engine Compartment Right)
ID4	78	Dash Wire and Floor No.1 Wire (Left Kick Panel)
II3	80	Dash Wire and Column Wire (Near the Ignition SW)
BH1	86	Pillar No.1 Wire and Back Door Upper Wire (Left Side of Back Door)
BH2		
BP3	88	Pillar No.1 Wire and Floor No.1 Wire (Left Rear Side Quarter Panel)

Rear Wiper and Washer

: **Ground Points**

Code	See Page	Ground Points Location
II	78	Set Bolt of Cowl Side J/B RH
BJ	86	Under the Driver's Seat

: **Splice Points**

Code	See Page	Wire Harness with Splice Points	Code	See Page	Wire Harness with Splice Points
B15	88	Back Door Upper Wire			

Cigarette Lighter

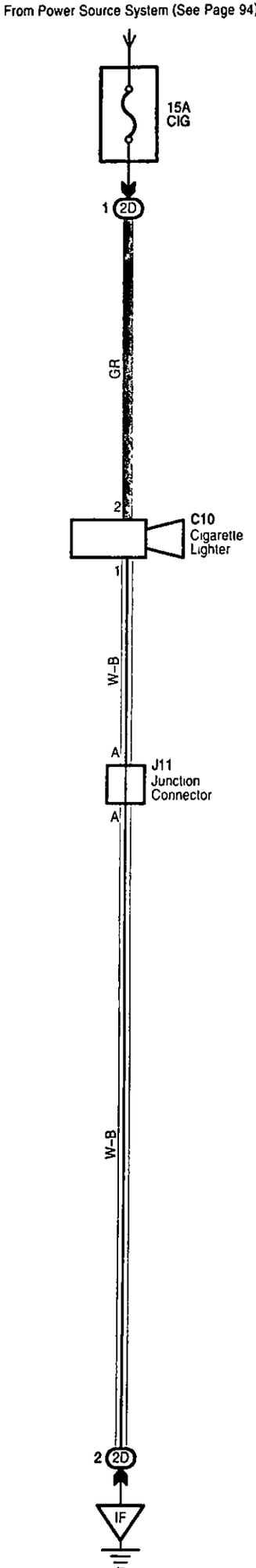

Service Hints

C10 Cigarette Lighter

2-Ground : Approx 12 volts with ignition SW at ACC or ON position
1-Ground : Always continuity

O : Parts Location

Code	See Page	Code	See Page	Code	See Page
C10	70	J11	71		

⬭ : Junction Block and Wire Harness Connector

Code	See Page	Junction Block and Wire Harness (Connector Location)
2D	28	Dash Wire and Cowl Side J/B LH (Left Kick Panel)

▽ : Ground Points

Code	See Page	Ground Points Location
IF	78	Set Bolt of Cowl Side J/B LH

Power Outlet

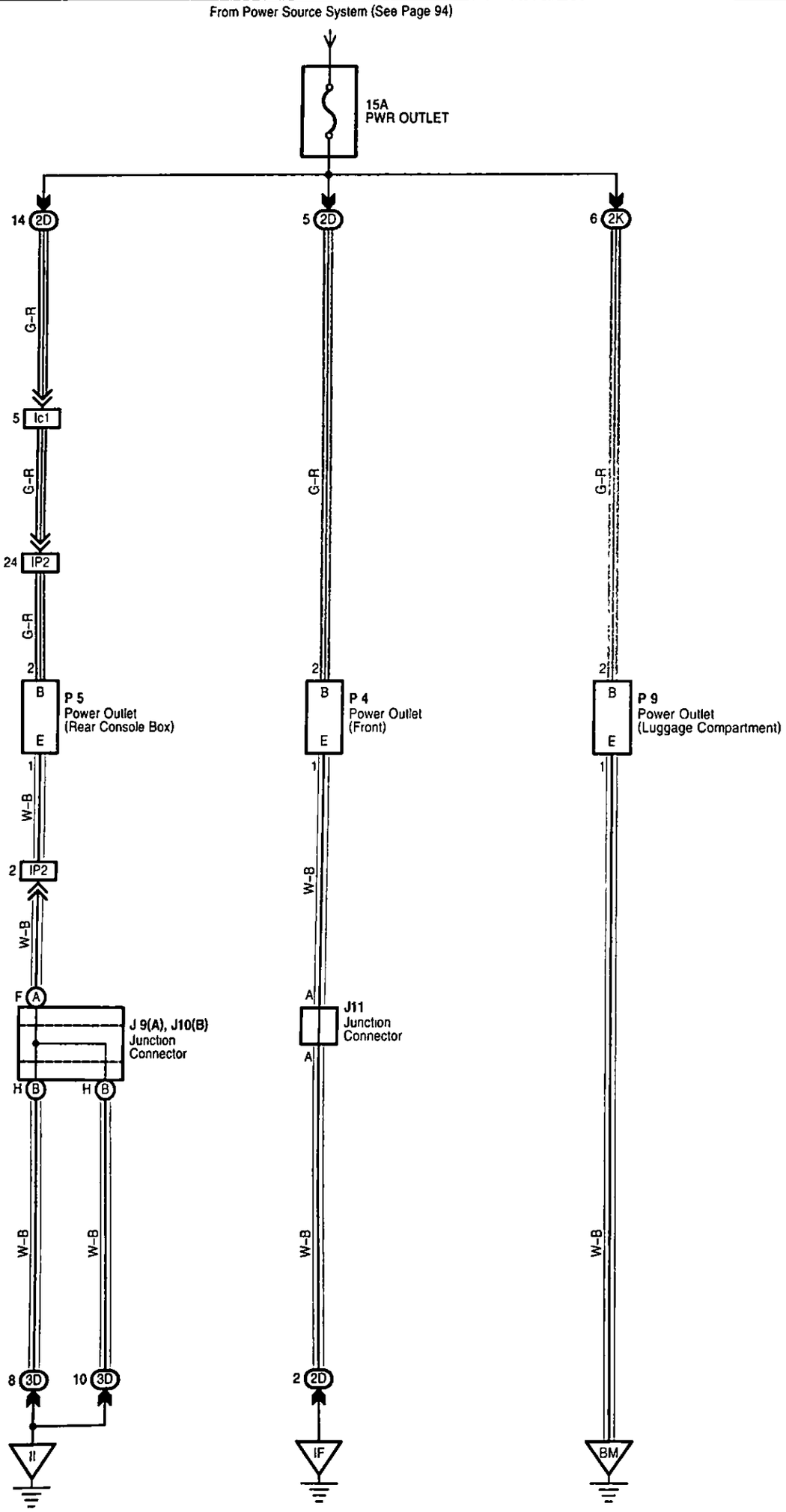

Service Hints

P4 Power Outlet (Front)
2-Ground : Approx. 12 volts with ignition SW at ACC or ON position
1-Ground : Always continuity

P5 Power Outlet (Rear Console Box)
2-Ground : Approx. 12 volts with ignition SW at ACC or ON position
1-Ground : Always continuity

P9 Power Outlet (Luggage Compartment)
2-Ground : Approx. 12 volts with ignition SW at ACC or ON position
1-Ground : Always continuity

○ : Parts Location

Code		See Page	Code	See Page	Code	See Page
J9	A	71	J11	71	P5	71
J10	B	71	P4	71	P9	73

⬭ : Junction Block and Wire Harness Connector

Code	See Page	Junction Block and Wire Harness (Connector Location)
2D	28	Dash Wire and Cowl Side J/B LH (Left Kick Panel)
2K	28	Floor No 1 Wire and Cowl Side J/B LH (Left Kick Panel)
3D	40	Dash Wire and Cowl Side J/B RH (Right Kick Panel)

□ : Connector Joining Wire Harness and Wire Harness

Code	See Page	Joining Wire Harness and Wire Harness (Connector Location)
IP2	80	Rear Console Box Wire and Dash Wire (Right Side of Rear Console)
Ic1	84	Dash Wire and Dash Wire (Behind the Center Panel)

▽ : Ground Points

Code	See Page	Ground Points Location
IF	78	Set Bolt of Cowl Side J/B LH
II	78	Set Bolt of Cowl Side J/B RH
BM	86	Left Rear Side Quarter Panel

From Power Source System (See Page 94)

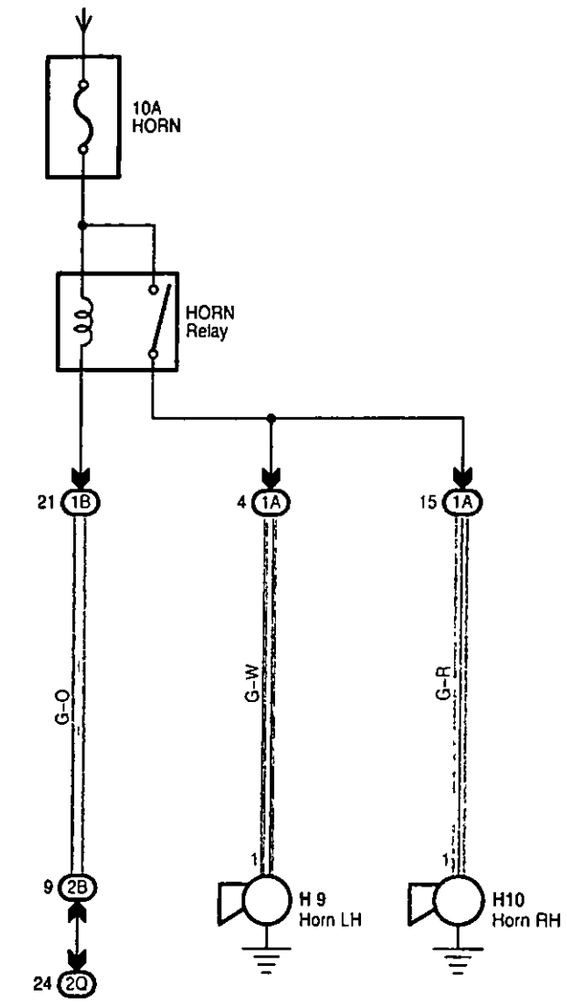

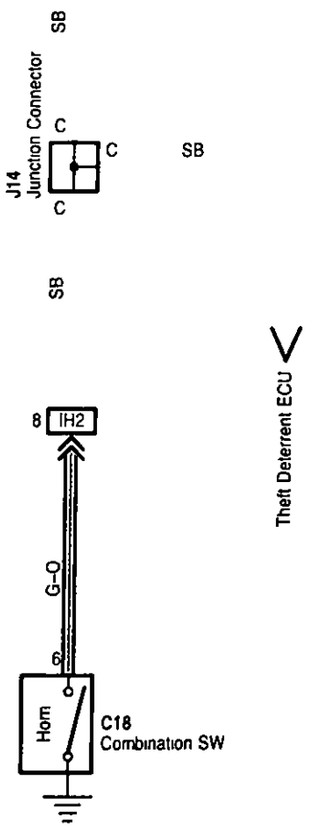

Service Hints

C18 Combination SW

6-Ground :Continuity with horn SW on

○ : Parts Location

Code	See Page	Code	See Page	Code	See Page
C18	70	H10	69		
H9	69	J14	71		

⬭ : Junction Block and Wire Harness Connector

Code	See Page	Junction Block and Wire Harness (Connector Location)
1A	24	Engine Room Main Wire and Engine Room J/B (Engine Compartment Left)
1B	24	Engine Room No.2 Wire and Engine Room J/B (Engine Compartment Left)
2B	28	Engine Room No 2 Wire and Cowl Side J/B LH (Left Kick Panel)
2Q	30	Instrument Panel Integration Wire and Cowl Side J/B LH (Left Kick Panel)

□ : Connector Joining Wire Harness and Wire Harness

Code	See Page	Joining Wire Harness and Wire Harness (Connector Location)
IH2	80	Instrument Panel Integration Wire and Column Wire (Near the Ignition SW)

Garage Door Opener

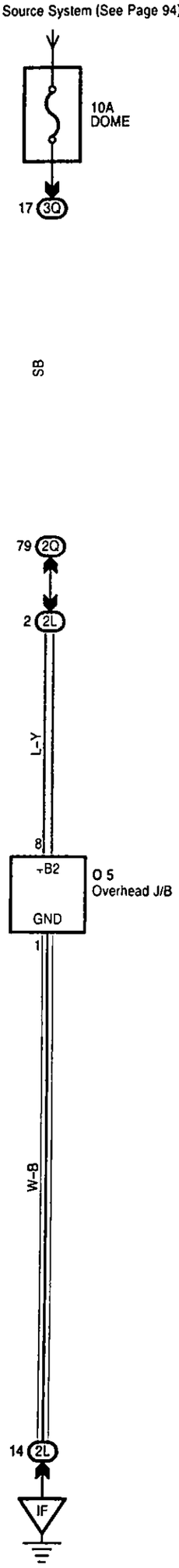

Service Hints

O5 Overhead J/B

8-Ground : Always approx. 12 volts

1-Ground : Always continuity

○ : Parts Location

Code	See Page	Code	See Page	Code	See Page
O5	72				

▭ : Junction Block and Wire Harness Connector

Code	See Page	Junction Block and Wire Harness (Connector Location)
2L	28	Roof No 1 Wire and Cowl Side J/B LH (Left Kick Panel)
2Q	30	Instrument Panel Integration Wire and Cowl Side J/B LH (Left Kick Panel)
3Q	42	Instrument Panel Integration Wire and Cowl Side J/B RH (Right Kick Panel)

▽ : Ground Points

Code	See Page	Ground Points Location
IF	78	Set Bolt of Cowl Side J/B LH

Electronically Controlled Transmission and A/T Indicator

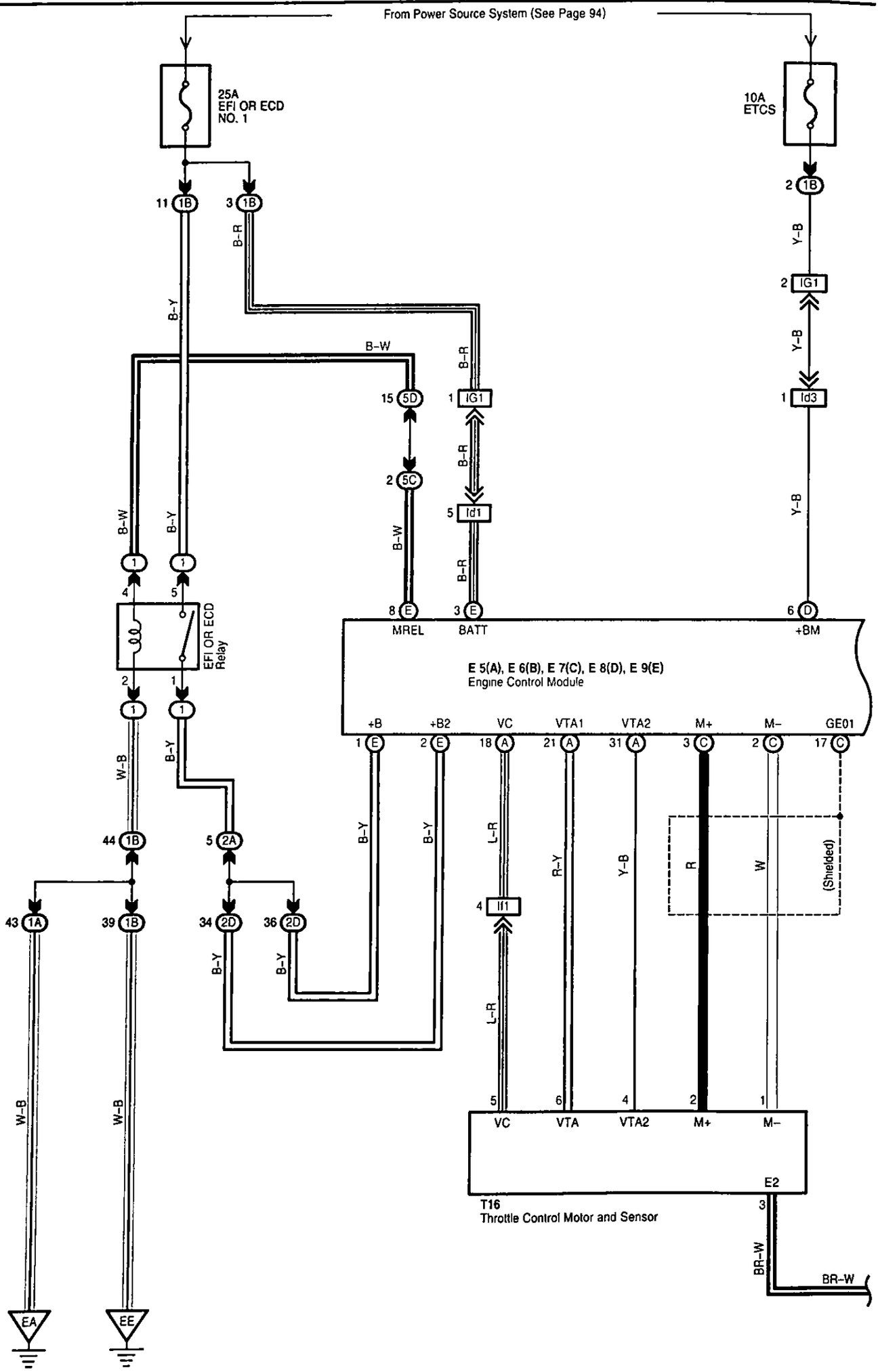

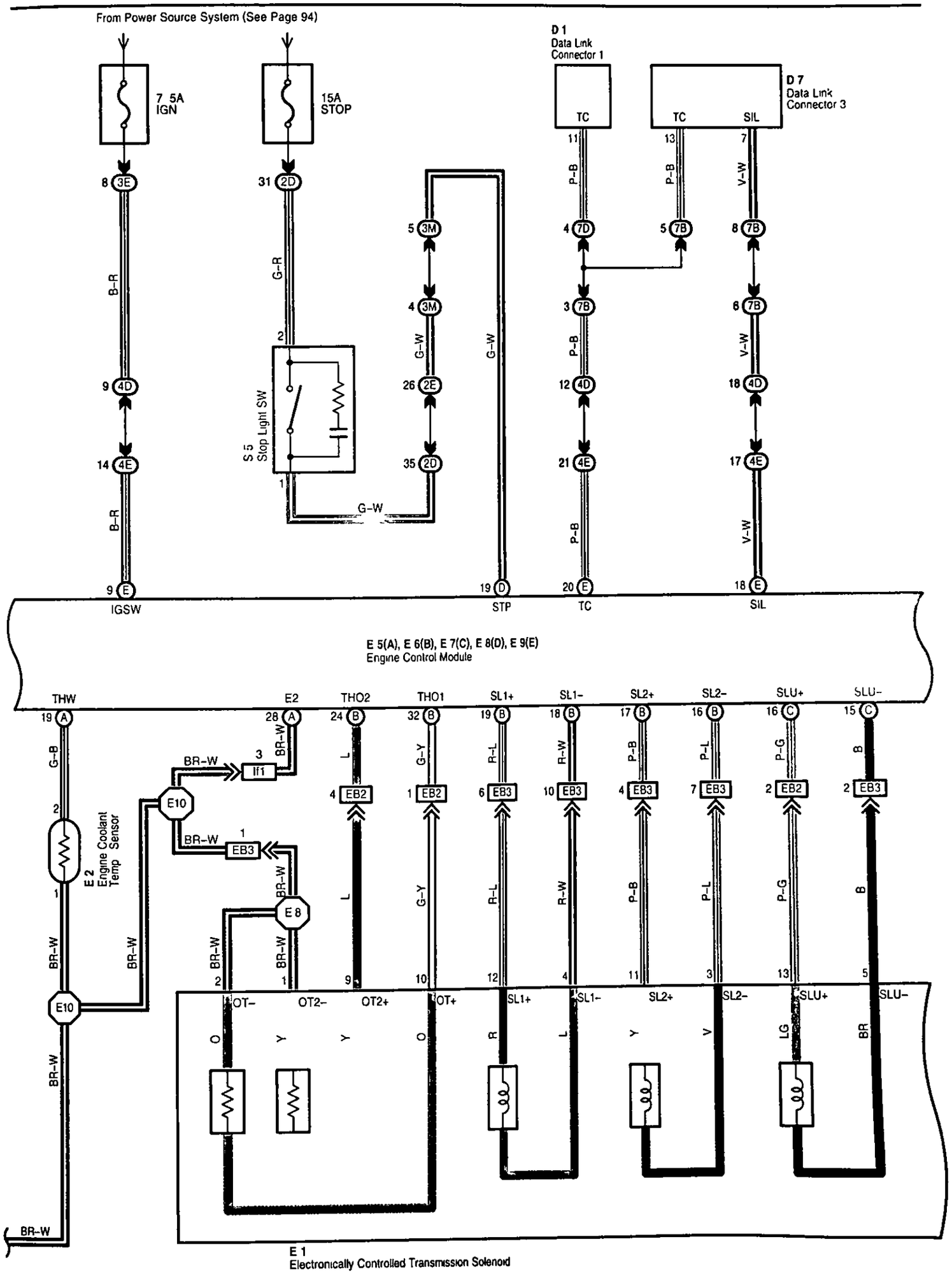
From Power Source System (See Page 94)
7.5A IGN
15A STOP
D1 Data Link Connector 1
D7 Data Link Connector 3
TC
TC
SIL
S5 Stop Light SW
IGSW
STP
TC
SIL
E5(A), E6(B), E7(C), E8(D), E9(E) Engine Control Module
THW
E2
THO2
THO1
SL1+
SL1-
SL2+
SL2-
SLU+
SLU-
E2 Engine Coolant Temp Sensor
E1 Electronically Controlled Transmission Solenoid
OT-
OT2-
OT2+
OT+
SL1+
SL1-
SL2+
SL2-
SLU+
SLU-

Electronically Controlled Transmission and A/T Indicator

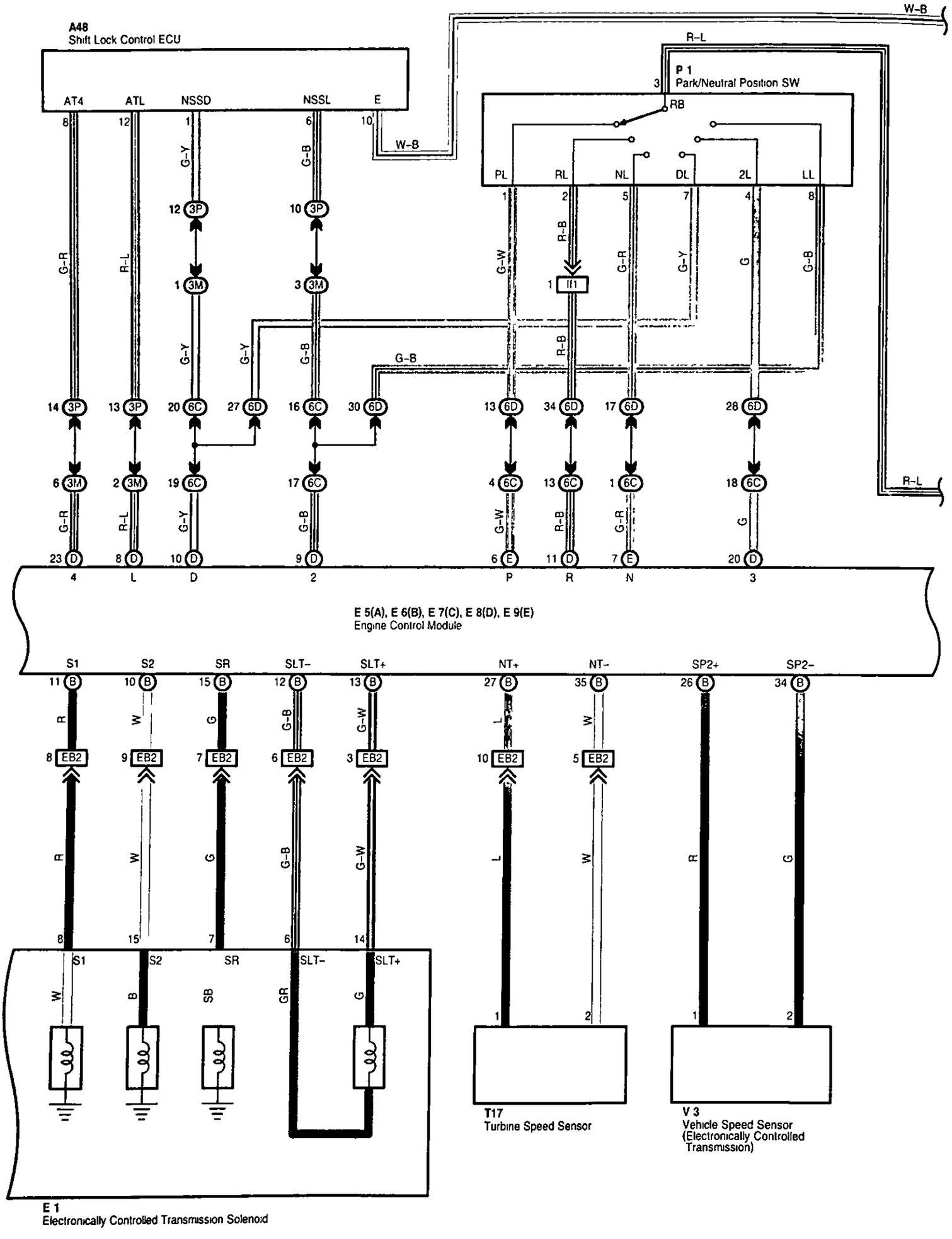

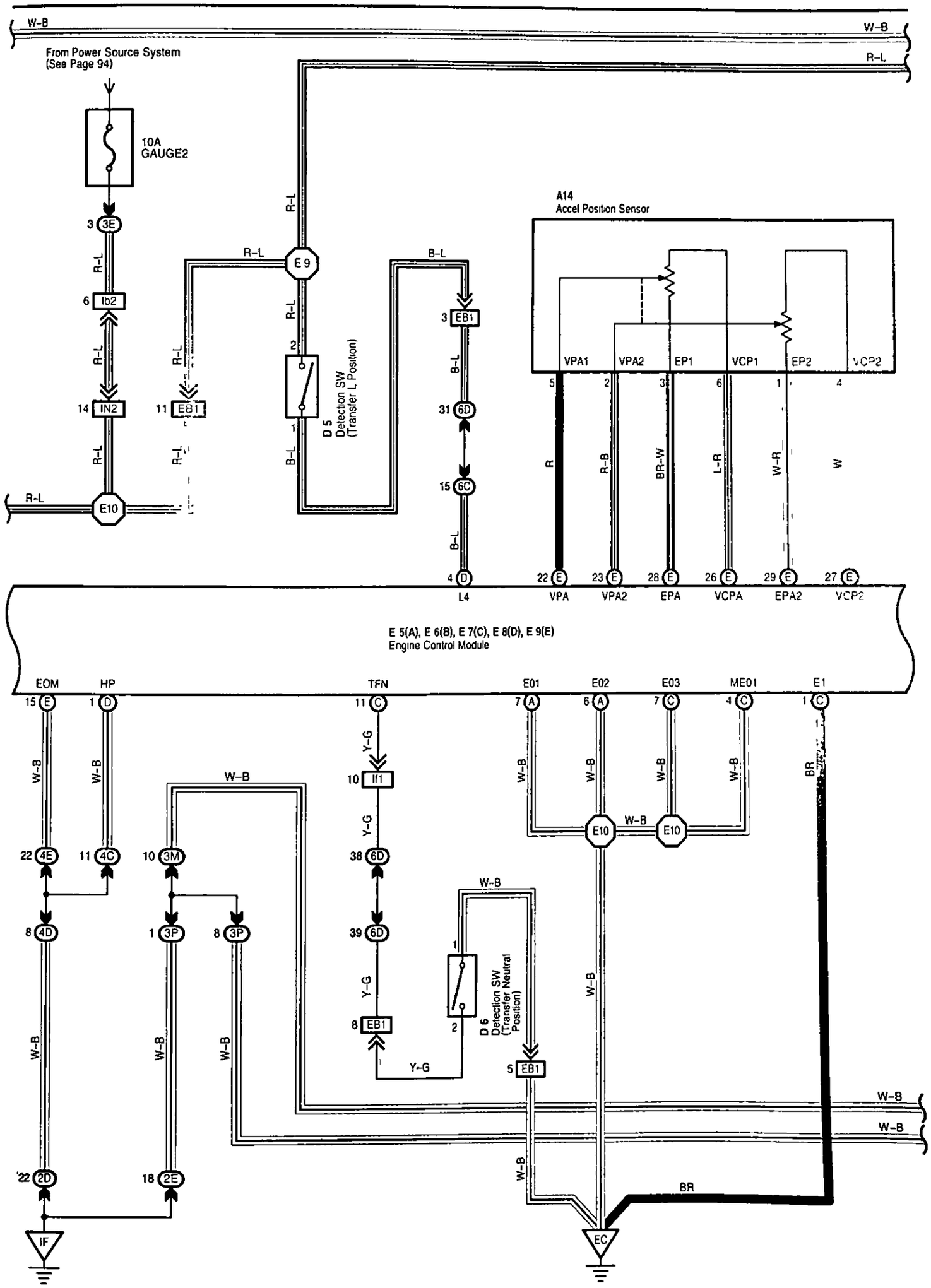
W-B
W-B
From Power Source System
(See Page 94)
R-L
10A
GAUGE2
3 3E
R-L
6 1b2
R-L
14 IN2
R-L
R-L
E10
R-L
11 EB1
R-L
R-L
E9
R-L
2
1
D5
Detection SW
(Transfer L Position)
B-L
B-L
3 EB1
B-L
31 6D
15 6C
B-L
4 D
L4
A14
Accel Position Sensor
VPA1
VPA2
EP1
VCP1
EP2
VCP2
5
2
3
6
1
4
R
R-B
BR-W
L-R
W-R
W
22 E
VPA
23 E
VPA2
28 E
EPA
26 E
VCPA
29 E
EPA2
27 E
VCP2
E 5(A), E 6(B), E 7(C), E 8(D), E 9(E)
Engine Control Module
EOM
HP
TFN
E01
E02
E03
ME01
E1
15 E
1 D
11 C
7 A
6 A
7 C
4 C
1 C
W-B
W-B
Y-G
W-B
W-B
W-B
W-B
BR
10 If1
Y-G
W-B
E10
W-B
E10
22 4E
11 4C
10 3M
38 6D
W-B
8 4D
1 3P
8 3P
39 6D
1
D6
Detection SW
(Transfer Neutral
Position)
Y-G
2
8 EB1
Y-G
5 EB1
W-B
W-B
W-B
W-B
W-B
W-B
22 2D
18 2E
BR
IF
EC

Electronically Controlled Transmission and A/T Indicator

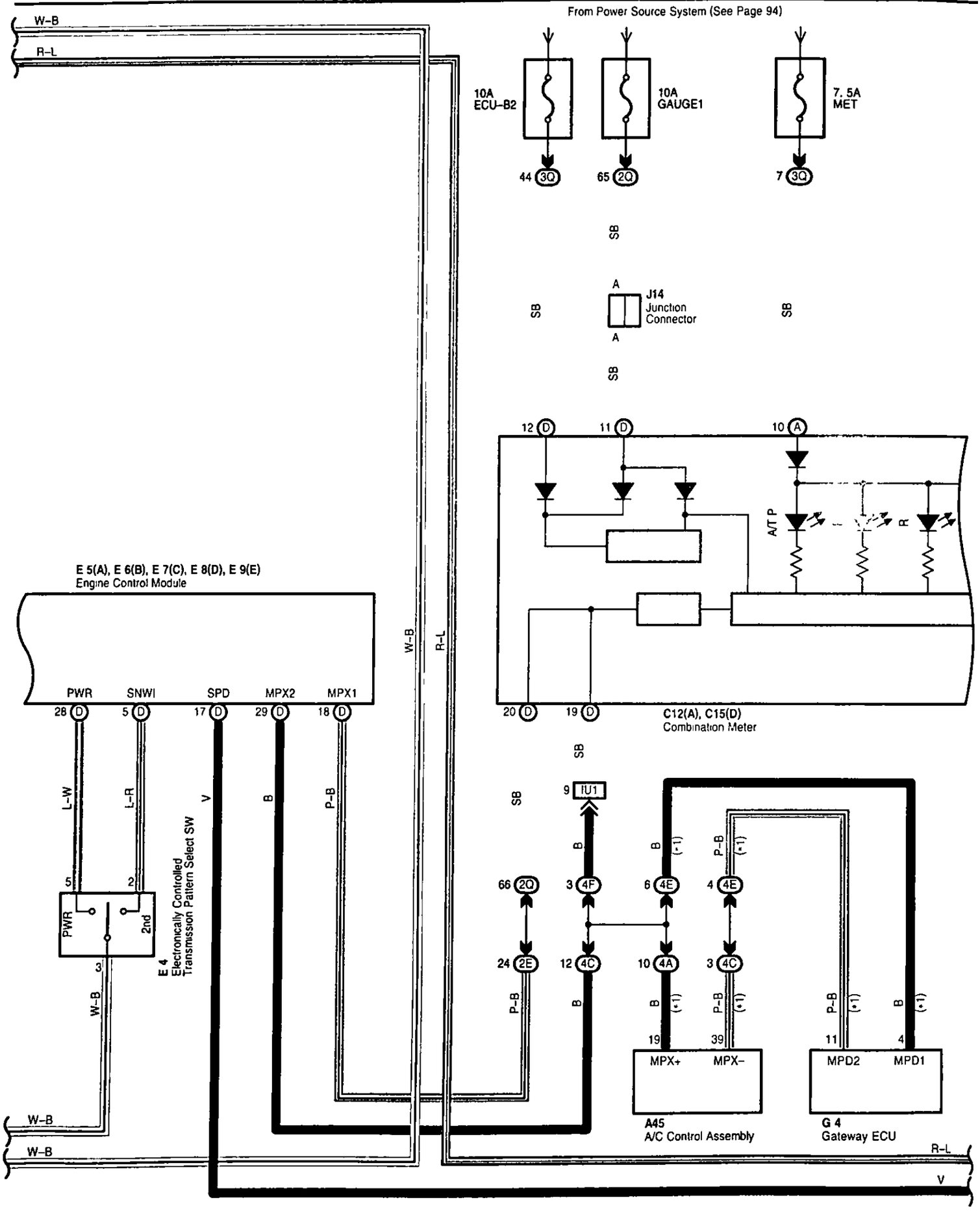

• 1 w/ Navigation System

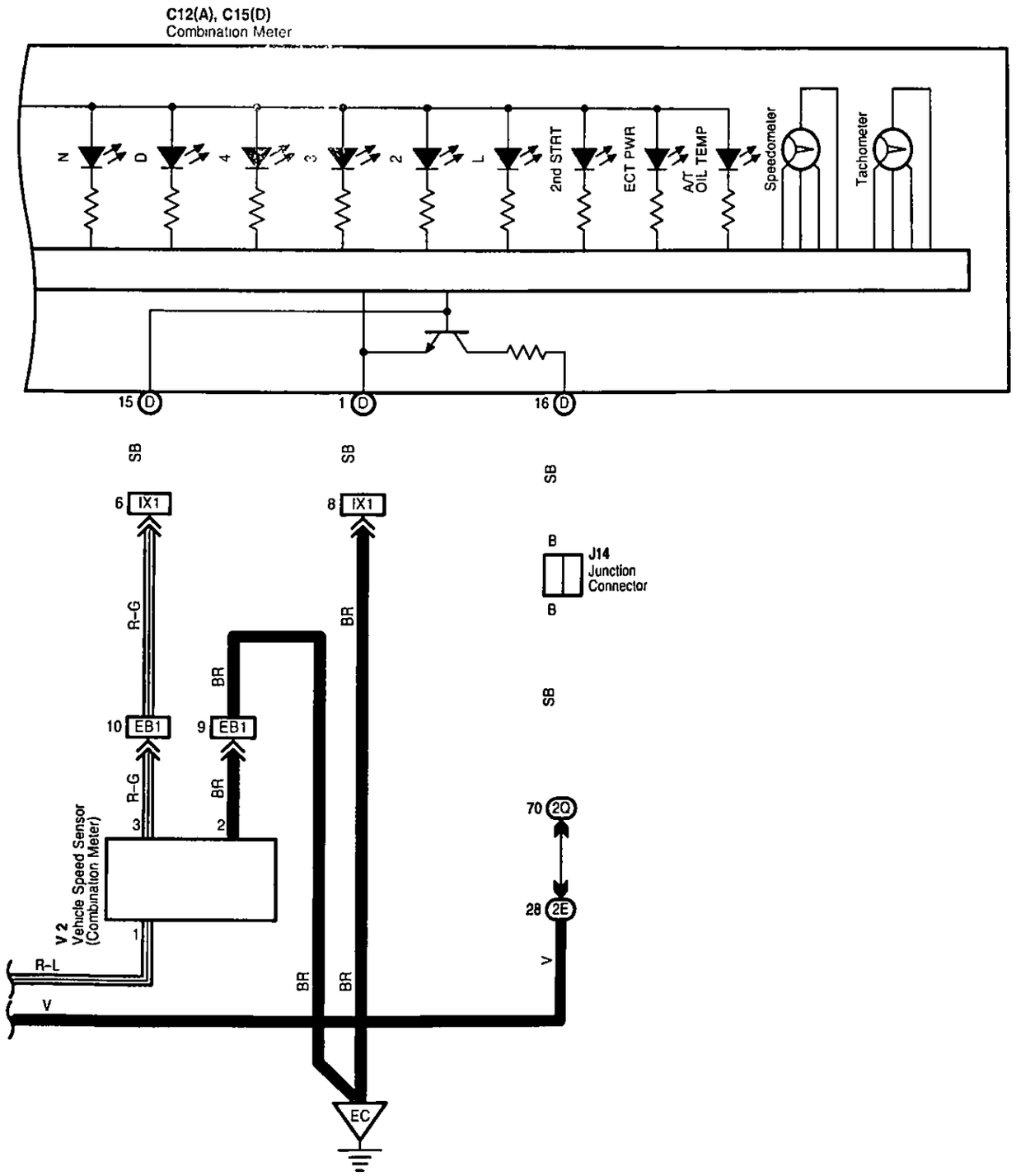

Electronically Controlled Transmission and A/T Indicator

System Outline

Previous automatic transmissions have selected each gear shift using mechanically controlled throttle hydraulic pressure, governor hydraulic pressure and lock-up hydraulic pressure. The electronically controlled transmission, however, electrically controls the line pressure, throttle pressure, lock-up pressure and accumulator pressure etc through the solenoid valve. The electronically controlled transmission is a system which precisely controls gear shift timing and lock-up timing in response to the vehicle's driving conditions and the engine condition detected by various sensors. It makes smooth driving possible by shift selection for each gear which is the most appropriate to the driving conditions at that time, and by preventing downing, squat and gear shift shock when starting off.

1. Gear Shift Operation

When driving, the engine warm up condition is input as a signal to TERMINAL THW of the engine control module from the engine coolant temp sensor and the vehicle speed signal from vehicle speed sensor is input to TERMINAL SP2+ of the engine control module. At the same time, the throttle valve opening signal from the throttle position sensor is input to TERMINALS VTA1 and VTA2 of the engine control module as throttle angle signal.
Based on these signals, the engine control module selects the best shift position for the driving conditions and sends current to the electronically controlled transmission solenoid.

2. Line Hydraulic Pressure Control

The engine control module adjusts the line hydraulic pressure to the optimal level by controlling TERMINAL SLT+ of the module according to the engine torque data. This realizes the smooth gear shifting.

3. High Response Gear Shifting Control

The engine control module performs the high response engine torque up control to control the ignition-timing lag as well as opening the electronic throttle when shifting down By doing this, the gear shifting is performed in a short period of time. Moreover, the engine control module uses the orifice switching control, which optimizes the speed of applying and reducing the hydraulic pressure. And it realizes the fine shifting condition by applying and reducing hydraulic pressure slowly when the gear shifting shock is important and quickly when the high response is required

4. Clutch Hydraulic Pressure Control

The engine control module controls the clutch operation in the optimal timing and with the best hydraulic pressure according to the engine torque data and the number of the clutch revolution

5. Lock-Up and Flexible Lock-Up Control

The engine control module carries out the lock-up control by controlling the TERMINAL SLU+ of the module according to the shift position, vehicle speed, throttle opening degree and running conditions. The engine control module also steadily keeps applying the lock-up clutch a delicate slippage to improve the transmission efficiency (Fuel efficiency) of the torque converter.

6. Stop Light SW Circuit

If the brake pedal is depressed (Stop light SW on) when driving in lock-up condition, a signal is input to TERMINAL STP of the engine control module. The engine control module operates and cuts the current to the solenoid to release lock-up.

7. Ai-Shift Control

The engine control module judges whether the road is downslope or upslope by detecting the throttle opening degree or the vehicle's speed. Moreover it can expect the winding roads by detecting the turning condition of the vehicle. The engine control module keeps unnecessary shifting up from the fourth gear from operating and carries out the automatic shifting down to the third gear in order to control the vehicle running according to the road conditions. The engine control module also reads the driver's intention during driving from his (her) accelerating operation and the running conditions of the vehicle. As a result of that, ideal shifting patters for each driver are automatically selected without any switching operations.

8. Electronically Controlled Transmission Pattern Select SW Circuit

When the electronically controlled transmission pattern select SW is switched to PWR, a signal is input to TERMINAL PWR of the engine control module. This enables shift-up and shift-down at a higher speed range.

9. Transfer Shift Operation

When the transfer shift lever is moved to L position, a signal is input into TERMINAL L4 of the engine control module.
In addition when the transfer shift lever is moved to N position a signal is input to engine control module TERMINAL TFN.
The engine control module detects the transfer condition through this.

Service Hints

E4 Electronically Controlled Transmission Pattern Select SW

5-3 : Closed with select SW at PWR position
2-3 : Closed with select SW at 2nd position

E7 (C), E9 (E) Engine Control Module

BATT-E1 : Always 9.0-14.0 volts
+B-E1 : 9 0-14.0 volts with ignition SW at ON or ST position
+B2-E1 : 9.0-14.0 volts with ignition SW at ON or ST position
IGSW-E1 : 9.0-14.0 volts with ignition SW at ON or ST position

P1 Park/Neutral Position SW

3-1 : Closed with shift lever in P position
3-2 : Closed with shift lever in R position
3-5 : Closed with shift lever in N position
3-7 : Closed with shift lever in D position
3-4 : Closed with shift lever in 2 position
3-8 : Closed with shift lever in L position

○ : Parts Location

Code	See Page	Code	See Page	Code	See Page
A14	70	E1	68	J14	71
A45	70	E2	68	P1	69
A48	70	E4	70	S5	71
C12 A	70	E5 A	70	T16	69
C15 D	70	E6 B	70	T17	69
D1	68	E7 C	70	V2	69
D5	68	E8 D	70	V3	69
D6	68	E9 E	70		
D7	70	G4	70		

▭ : Relay Blocks

Code	See Page	Relay Blocks (Relay Block Location)
1	22	Engine Room R/B (Engine Compartment Left)

Electronically Controlled Transmission and A/T Indicator

: Junction Block and Wire Harness Connector

Code	See Page	Junction Block and Wire Harness (Connector Location)
1A	24	Engine Room Main Wire and Engine Room J/B (Engine Compartment Left)
1B	24	Engine Room No 2 Wire and Engine Room J/B (Engine Compartment Left)
2A	28	Engine Room No 2 Wire and Cowl Side J/B LH (Left Kick Panel)
2D	28	Dash Wire and Cowl Side J/B LH (Left Kick Panel)
2E		
2Q	30	Instrument Panel Integration Wire and Cowl Side J/B LH (Left Kick Panel)
3E	40	Dash Wire and Cowl Side J/B RH (Right Kick Panel)
3M	43	
3P		
3Q	42	Instrument Panel Integration Wire and Cowl Side J/B RH (Right Kick Panel)
4A	52	Dash Wire and J/B No 4 (Instrument Panel Center)
4C		
4D		
4E		
4F		
5C	56	Dash Wire and J/B No 5 (Behind the Combination Meter)
5D	56	Engine Room No 2 Wire and J/B No 5 (Behind the Combination Meter)
6C	60	Dash Wire and J/B No 6 (Behind the Grove Box)
6D	60	Engine Wire and J/B No 6 (Behind the Grove Box)
7B	64	Dash Wire and J/B No.7 (Behind the Grove Box)
7D	64	Engine Room No 2 Wire and J/B No 7 (Behind the Grove Box)

: Connector Joining Wire Harness and Wire Harness

Code	See Page	Joining Wire Harness and Wire Harness (Connector Location)
EB1	76	Engine Wire and Transmission Wire (On the Transmission)
EB2		
EB3		
IG1	78	Engine Room No 2 Wire and Dash Wire (Behind the Combination Meter)
IN2	80	Engine Wire and Dash Wire (Behind the Glove Box)
IU1	82	Instrument Panel Integration Wire and Dash Wire (Behind the Glove Box)
IX1	82	Instrument Panel Integration Wire and Engine Wire (Behind the Glove Box)
Ib2	84	Dash Wire and Dash Wire (Behind the Combination Meter)
Id1	84	Dash Wire and Dash Wire (Instrument Panel Center)
Id3		
If1	84	Engine Wire and Engine Wire (Behind the Glove Box)

: Ground Points

Code	See Page	Ground Points Location
EA	76	Front Right Side of Fender Apron
EC	76	Rear Bank of Right Cylinder Head
EE	76	Front Left Side of Fender Apron
IF	78	Set Bolt of Cowl Side J/B LH

: Splice Points

Code	See Page	Wire Harness with Splice Points	Code	See Page	Wire Harness with Splice Points
E8	76	Transmission Wire	E10	76	Engine Wire
E9					

Cruise Control

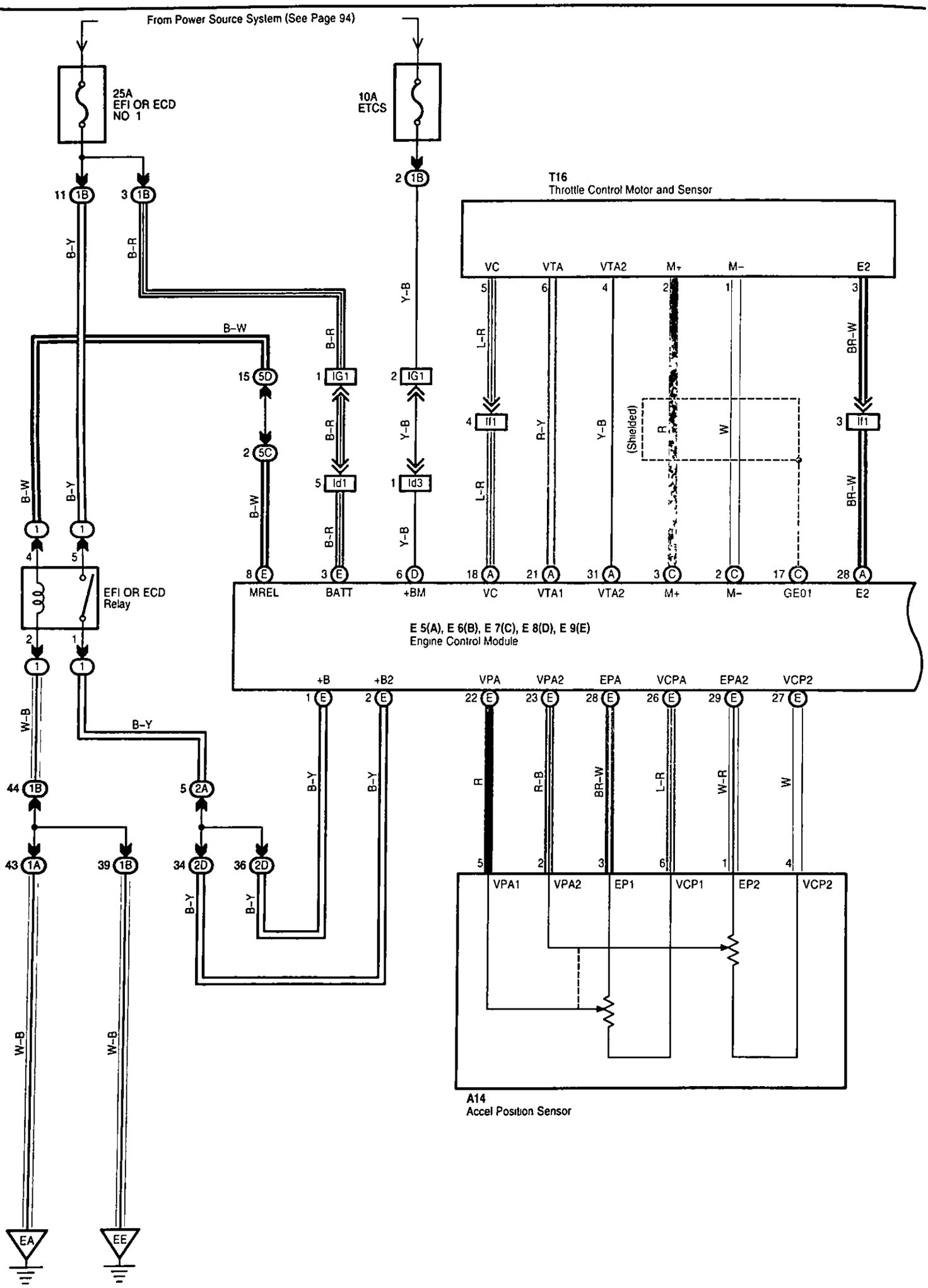

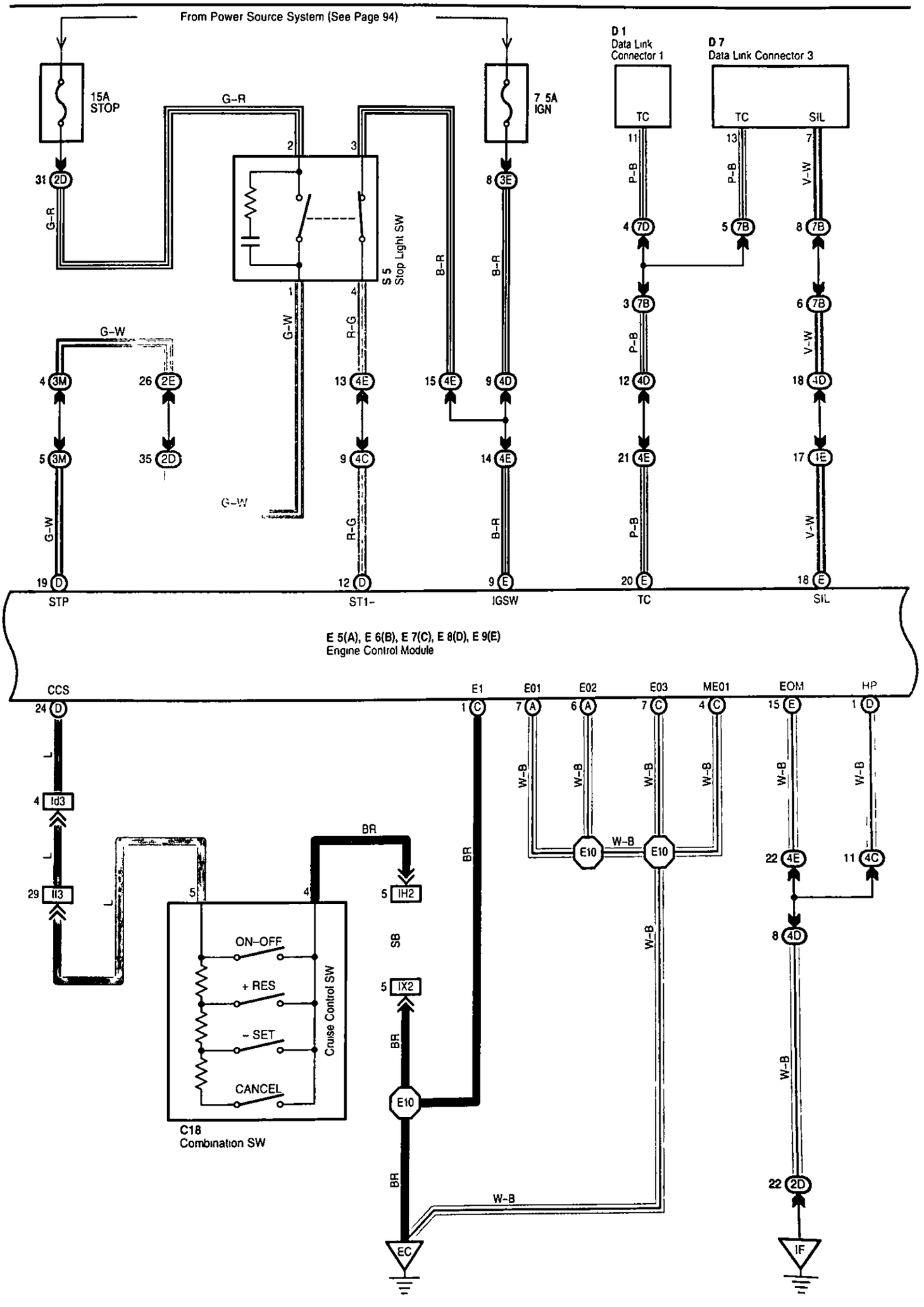
From Power Source System (See Page 94)
15A STOP
7.5A IGN
D1 Data Link Connector 1
D7 Data Link Connector 3
TC
SIL
G-R
G-W
R-G
B-R
P-B
V-W
S5 Stop Light SW
STP
ST1-
IGSW
E 5(A), E 6(B), E 7(C), E 8(D), E 9(E)
Engine Control Module
CCS
E1
E01
E02
E03
ME01
EOM
HP
W-B
BR
SB
L
Id3
II3
IH2
IX2
E10
EC
IF
ON-OFF
+ RES
- SET
CANCEL
Cruise Control SW
C18
Combination SW

Cruise Control

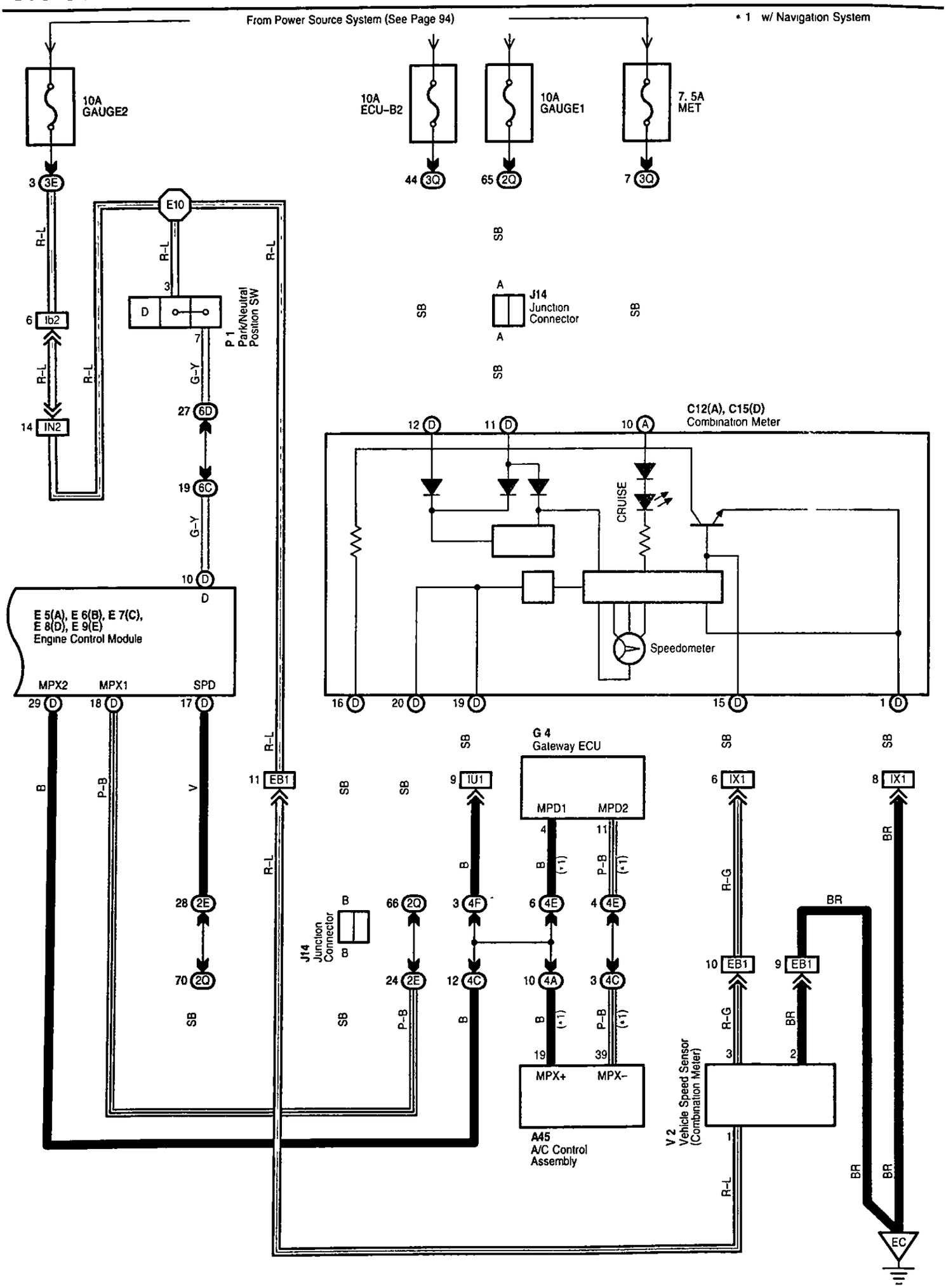

System Outline

The cruise control system is a constant vehicle speed controller which controls the opening angle of the engine throttle valve by the SW, and allows driving at a constant speed without depressing the accelerator pedal.

Set Operation

When the ON-OFF SW is turned on, the systems starts preparations for cruise control and turns on the indicator light in the combination meter.

Set Speed Control

When the - SET SW is operated with the ON-OFF SW turned on during driving, the speed is controlled at a constant speed.

Coast Control

When the - SET SW is kept turned on during cruise control driving, the engine control module controls the throttle valve to decelerate the vehicle speed.
Every time the - SET SW is turned on instantaneously, the vehicle speed is decelerated approx. 1.5 km/h.

Accel Control

When the + RES SW is kept turned on during cruise control driving, the engine control module controls the throttle valve to accelerate the vehicle speed.
Every time the + RES SW is turned on instantaneously, the vehicle speed is accelerated approx. 1.5 km/h.

Resume Control

If the vehicle speed is within the low speed limit (Approx. 40 km/h, 25 mph) when canceling the cruise control, operation of the + RES SW accelerates the vehicle speed and resumes the level before canceling the cruise control.

Manual Cancel Mechanism

If any of the following signals are input during cruise control driving, the cruise control is canceled.
* The stop light SW is on
* The CANCEL SW is turned on
* The ON-OFF SW is turned off

Auto Cancel Function

If any of the following conditions are detected, the cruise control is canceled:
* Failure in the stop light SW wiring
* Abnormality in the vehicle speed signal
* Malfunction in the electronically controlled throttle parts

Overdrive Function

The overdrive may be canceled if the vehicle travels on a upward slope during cruise control driving. After the overdrive is canceled, if the vehicle speed exceeds the overdrive return speed (Set speed (2 km/h, 1.2 mph)) and it is determined that the slope has finished, and the vehicle returns to overdrive mode again.

Service Hints

E8 (D), E9 (E) Engine Control Module

BATT-E1 : Always 9.0-14.0 volts
IGSW-E1 : 9.0-14 0 volts with ignition SW at ON or ST position
STP-E1 : 7.5-14 volts with brake pedal is depressed
: Below 1.5 volts with brake pedal is released

C18 Combination SW

5-4 : Approx. 1540 Ω with CANCEL SW on
: Approx. 240 Ω with + RES SW on
: Approx. 630 Ω with - SET SW on

○ : Parts Location

Code		See Page	Code		See Page	Code	See Page
A14		70	D7		70	G4	70
A45		70	E5	A	70	J14	71
C12	A	70	E6	B	70	P1	69
C15	D	70	E7	C	70	S5	71
C18		70	E8	D	70	T16	69
D1		68	E9	E	70	V2	69

Cruise Control

: Relay Blocks

Code	See Page	Relay Blocks (Relay Block Location)
1	22	Engine Room R/B (Engine Compartment Left)

: Junction Block and Wire Harness Connector

Code	See Page	Junction Block and Wire Harness (Connector Location)
1A	24	Engine Room Main Wire and Engine Room J/B (Engine Compartment Left)
1B	24	Engine Room No 2 Wire and Engine Room J/B (Engine Compartment Left)
2A	28	Engine Room No 2 Wire and Cowl Side J/B LH (Left Kick Panel)
2D	28	Dash Wire and Cowl Side J/B LH (Left Kick Panel)
2E		
2Q	30	Instrument Panel Integration Wire and Cowl Side J/B LH (Left Kick Panel)
3E	40	Dash Wire and Cowl Side J/B RH (Right Kick Panel)
3M	43	
3Q	42	Instrument Panel Integration Wire and Cowl Side J/B RH (Right Kick Panel)
4A	52	Dash Wire and J/B No.4 (Instrument Panel Center)
4C		
4D		
4E		
4F		
5C	56	Dash Wire and J/B No 5 (Behind the Combination Meter)
5D	56	Engine Room No 2 Wire and J/B No 5 (Behind the Combination Meter)
6C	60	Dash Wire and J/B No 6 (Behind the Grove Box)
6D	60	Engine Wire and J/B No 6 (Behind the Grove Box)
7B	64	Dash Wire and J/B No 7 (Behind the Grove Box)
7D	64	Engine Room No 2 Wire and J/B No 7 (Behind the Grove Box)

: Connector Joining Wire Harness and Wire Harness

Code	See Page	Joining Wire Harness and Wire Harness (Connector Location)
EB1	76	Engine Wire and Transmission Wire (On the Transmission)
IG1	78	Engine Room No.2 Wire and Dash Wire (Behind the Combination Meter)
IH2	80	Instrument Panel Integration Wire and Column Wire (Near the Ignition SW)
II3	80	Dash Wire and Column Wire (Near the Ignition SW)
IN2	80	Engine Wire and Dash Wire (Behind the Glove Box)
IU1	82	Instrument Panel Integration Wire and Dash Wire (Behind the Glove Box)
IX1	82	Instrument Panel Integration Wire and Engine Wire (Behind the Glove Box)
IX2		
Ib2	84	Dash Wire and Dash Wire (Behind the Combination Meter)
Id1	84	Dash Wire and Dash Wire (Instrument Panel Center)
Id3		
If1	84	Engine Wire and Engine Wire (Behind the Glove Box)

: Ground Points

Code	See Page	Ground Points Location
EA	76	Front Right Side of Fender Apron
EC	76	Rear Bank of Right Cylinder Head
EE	76	Front Left Side of Fender Apron
IF	78	Set Bolt of Cowl Side J/B LH

: Splice Points

Code	See Page	Wire Harness with Splice Points	Code	See Page	Wire Harness with Splice Points
E10	76	Engine Wire			

VSC

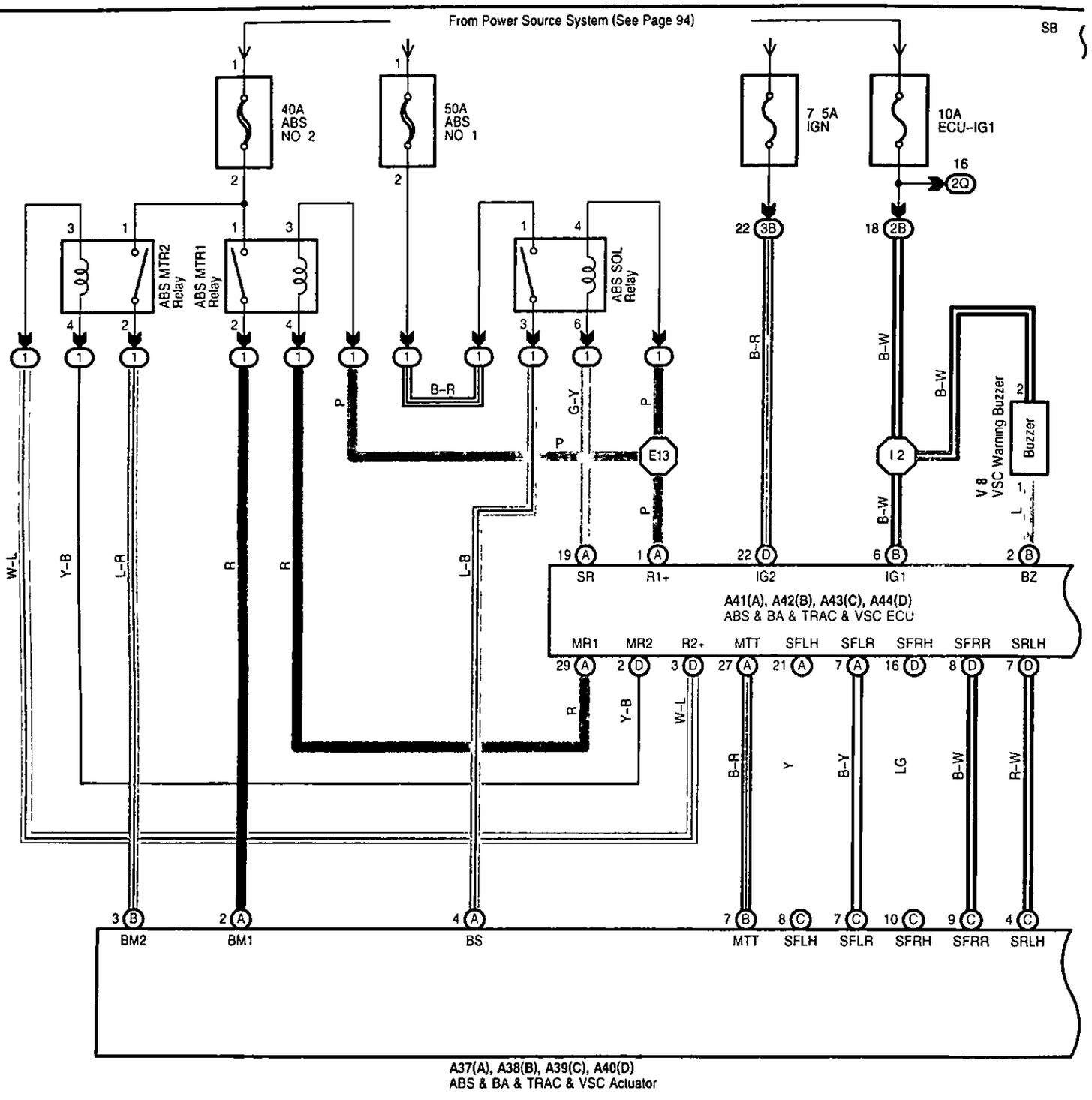
From Power Source System (See Page 94)
SB
40A ABS NO 2
50A ABS NO 1
7.5A IGN
10A ECU-IG1
16
2Q
ABS MTR2 Relay
ABS MTR1 Relay
ABS SOL Relay
22 3B
18 2B
B-R
B-W
G-Y
P
E13
I2
V8 VSC Warning Buzzer
Buzzer
W-L
Y-B
L-R
R
L-B
19 A SR
1 A R1+
22 D IG2
6 B IG1
2 B BZ
A41(A), A42(B), A43(C), A44(D)
ABS & BA & TRAC & VSC ECU
MR1 MR2 R2+ MTT SFLH SFLR SFRH SFRR SRLH
29 A
2 D
3 D
27 A
21 A
7 A
16 D
8 D
7 D
B-R
Y
B-Y
LG
B-W
R-W
3 B BM2
2 A BM1
4 A BS
7 B MTT
8 C SFLH
7 C SFLR
10 C SFRH
9 C SFRR
4 C SRLH
A37(A), A38(B), A39(C), A40(D)
ABS & BA & TRAC & VSC Actuator

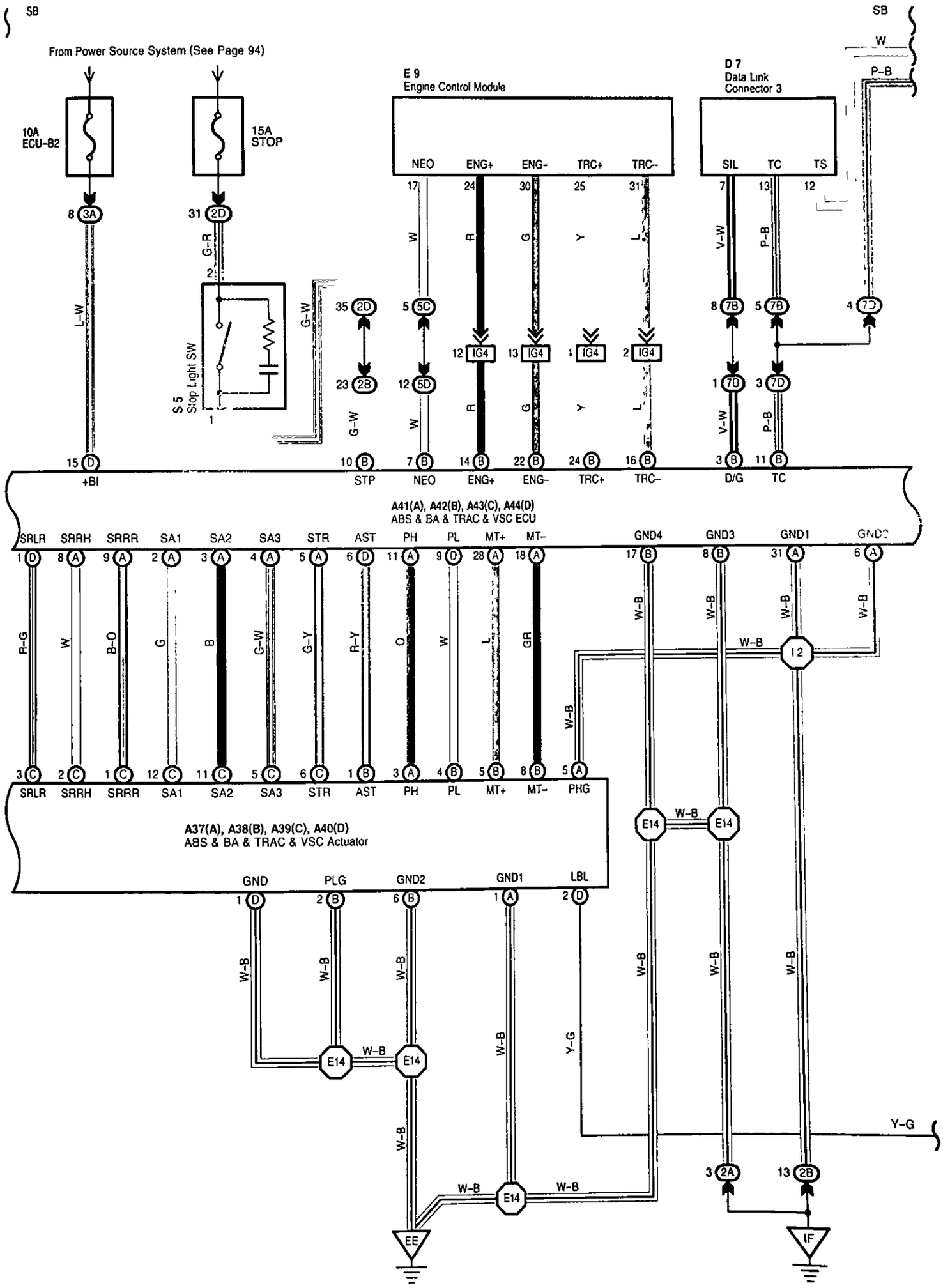
SB
From Power Source System (See Page 94)
10A
ECU-B2
15A
STOP
E 9
Engine Control Module
NEO
ENG+
ENG-
TRC+
TRC-
D 7
Data Link
Connector 3
SIL
TC
TS
SB
W
P-B
8 3A
31 2D
G-R
2
L-W
S 5
Stop Light SW
1
G-W
35 2D
23 2B
G-W
5 5C
12 5D
W
17
24
30
25
31
R
G
Y
L
12 IG4
13 IG4
1 IG4
2 IG4
7
13
12
V-W
P-B
8 7B
5 7B
4 7D
1 7D
3 7D
15 D
+BI
10 B
STP
7 B
NEO
14 B
ENG+
22 B
ENG-
24 B
TRC+
16 B
TRC-
3 B
D/G
11 B
TC
A41(A), A42(B), A43(C), A44(D)
ABS & BA & TRAC & VSC ECU
SRLR
SRRH
SRRR
SA1
SA2
SA3
STR
AST
PH
PL
MT+
MT-
GND4
GND3
GND1
GND2
R-G
W
B-O
G
B
G-W
G-Y
R-Y
O
W
L
GR
W-B
12
3 C
SRLR
2 C
SRRH
1 C
SRRR
12 C
SA1
11 C
SA2
5 C
SA3
6 C
STR
1 B
AST
3 A
PH
4 B
PL
5 B
MT+
8 B
MT-
5 A
PHG
A37(A), A38(B), A39(C), A40(D)
ABS & BA & TRAC & VSC Actuator
GND
PLG
GND2
GND1
LBL
E14
E14
E14
E14
Y-G
3 2A
13 2B
EE
IF

VSC

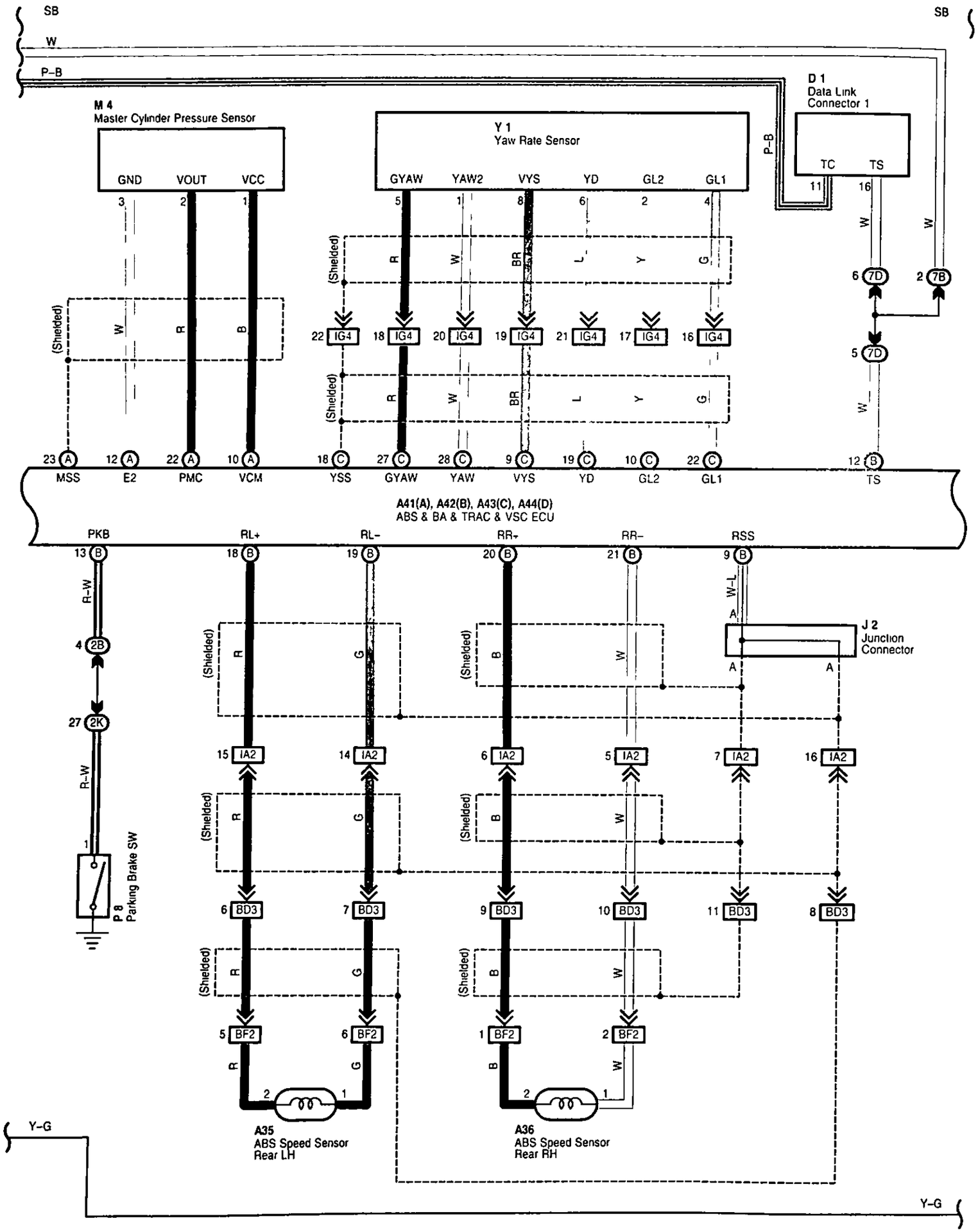
SB
W
P-B
SB
M 4
Master Cylinder Pressure Sensor
GND
VOUT
VCC
Y 1
Yaw Rate Sensor
GYAW
YAW2
VYS
YD
GL2
GL1
D 1
Data Link
Connector 1
TC
TS
(Shielded)
IG4
MSS
E2
PMC
VCM
YSS
GYAW
YAW
VYS
YD
GL2
GL1
TS
A41(A), A42(B), A43(C), A44(D)
ABS & BA & TRAC & VSC ECU
PKB
RL+
RL-
RR+
RR-
RSS
J 2
Junction
Connector
IA2
BD3
BF2
P 8
Parking Brake SW
A35
ABS Speed Sensor
Rear LH
A36
ABS Speed Sensor
Rear RH
Y-G
Y-G

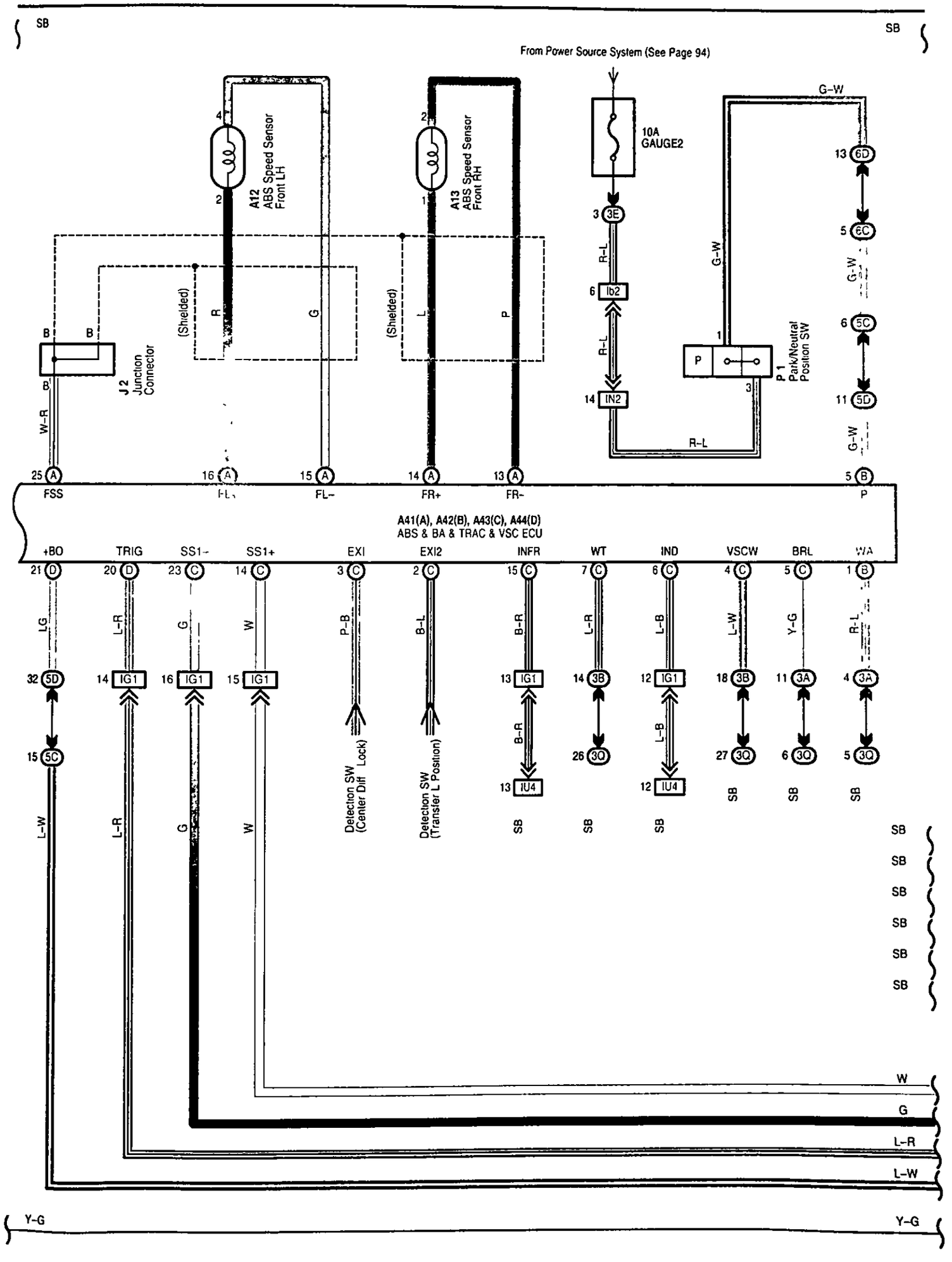
SB
SB
From Power Source System (See Page 94)
A12 ABS Speed Sensor Front LH
A13 ABS Speed Sensor Front RH
10A GAUGE2
P 1 Park/Neutral Position SW
J 2 Junction Connector
(Shielded)
(Shielded)
G-W
R-L
W-R
FSS
FL+
FL-
FR+
FR-
P
A41(A), A42(B), A43(C), A44(D) ABS & BA & TRAC & VSC ECU
+BO
TRIG
SS1-
SS1+
EXI
EXI2
INFR
WT
IND
VSCW
BRL
WA
Detection SW (Center Diff Lock)
Detection SW (Transfer L Position)
L-W
L-R
G
W
P-B
B-L
B-R
L-B
L-W
Y-G
R-L
SB
Y-G
Y-G

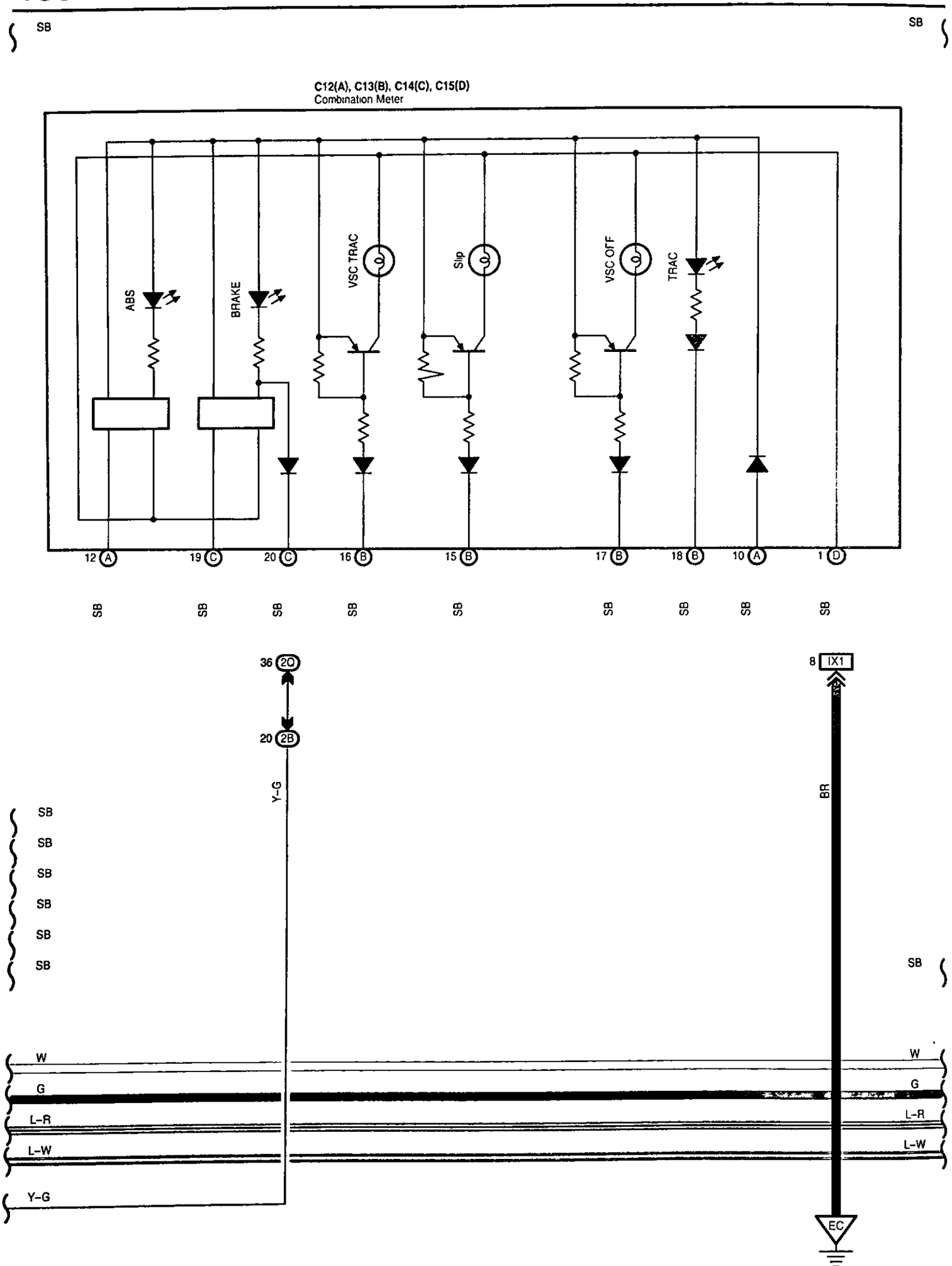
SB
SB
C12(A), C13(B), C14(C), C15(D)
Combination Meter
ABS
BRAKE
VSC TRAC
Slip
VSC OFF
TRAC
12 A
19 C
20 C
16 B
15 B
17 B
18 B
10 A
1 D
SB
SB
SB
SB
SB
SB
SB
SB
SB
36 2Q
20 2B
Y-G
8 IX1
BR
SB
SB
SB
SB
SB
SB
SB
W
G
L-R
L-W
Y-G
W
G
L-R
L-W
EC

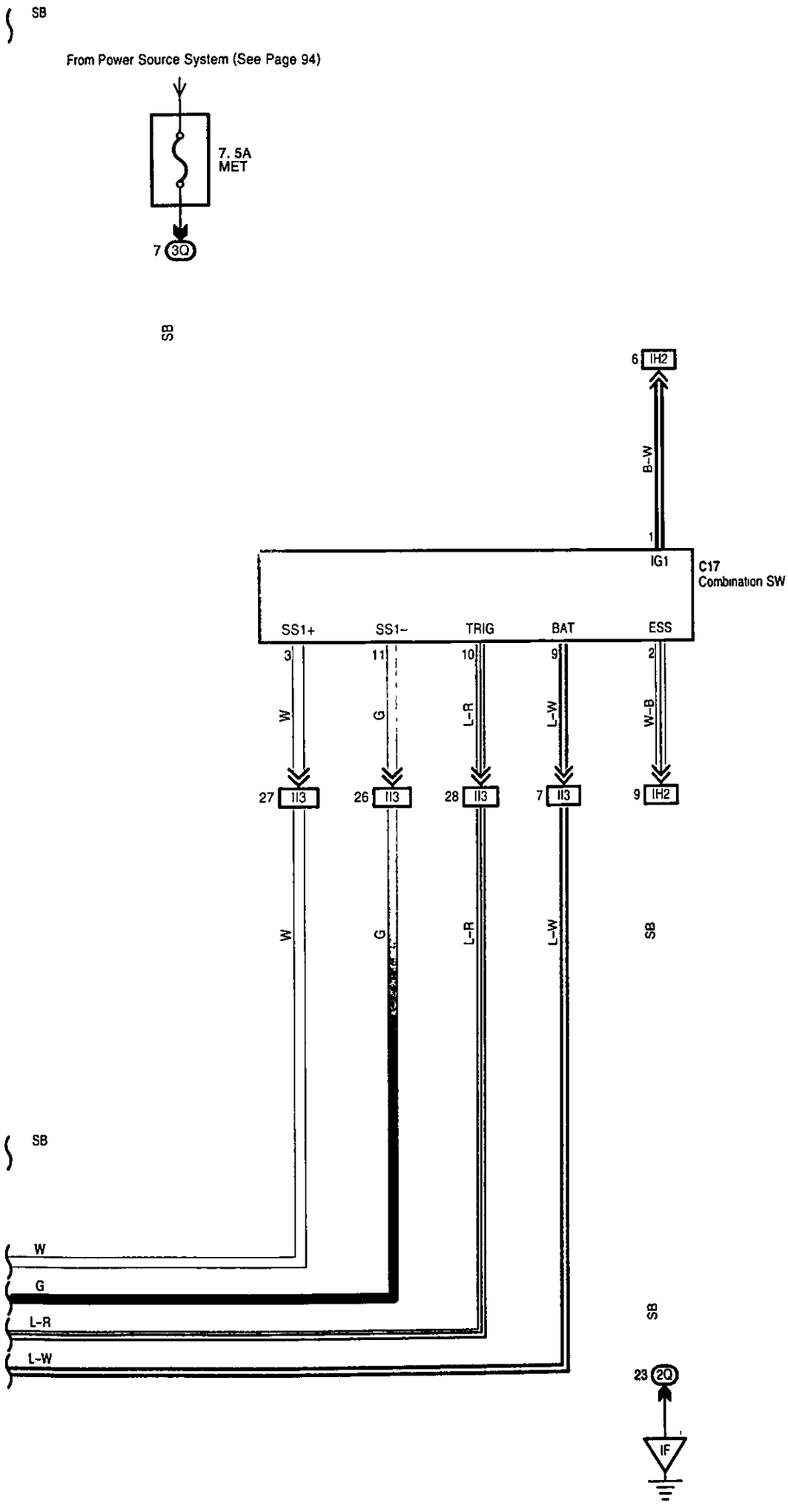
SB
From Power Source System (See Page 94)
7.5A
MET
7 3Q
SB
6 IH2
B-W
1
IG1
C17
Combination SW
SS1+
SS1-
TRIG
BAT
ESS
3
11
10
9
2
W
G
L-R
L-W
W-B
27 II3
26 II3
28 II3
7 II3
9 IH2
W
G
L-R
L-W
SB
SB
SB
W
G
L-R
L-W
23 2Q
IF

System Outline

1. ABS Operation

If the brake pedal is depressed suddenly, the ABS controls the hydraulic pressure of the wheel cylinders for all the four wheels to automatically avoid wheel locking and ensure the directional and steering stability of the vehicle. If the brake pedal is depressed suddenly, the ABS & BA & TRAC & VSC ECU controls the solenoids in the actuators using the signals from the sensors to move the brake fluid to the reservoir in order to release the braking pressure applied to the wheel cylinder. If the ABS & BA & TRAC & VSC ECU detects that the fluid pressure in the wheel cylinder is insufficient, the ECU controls the solenoids in the actuators to increase the braking pressure.

2. Traction Control Operation

The traction control system controls the engine torque, the hydraulic pressure of the driving wheel cylinders, slipping of the wheels which may occur at start or acceleration of the vehicle, to ensure an optimal driving power and vehicle stability corresponding to the road conditions.

3. VSC Operation

Unexpected road conditions, vehicle speed, emergency situation, and any other external factors may cause large under- or over-steering of the vehicle If this occurs, the VSC system automatically controls the engine power and wheel brakes to reduce the under- or over-steering

To reduce large over-steering

If the VSC system determines that the over-steering is large, it activates the brakes for the outer turning wheels depending on the degree of the over-steering to produce the moment toward the outside of the vehicle and reduce the over-steering.

To reduce large under-steering :

If the VSC system determines that the under-steering is large, it controls the engine power and activates the rear wheel brakes to reduce the under-steering.

VSC indicator light

If an error occurs in the VSC system, the VSC indicator lights up to warn the driver.

4. Traction Mode and VSC Function

When the center differential of the transfer is locked, the VSC function is turned off. At this time, the VSC OFF indicator light in the combination meter will come on, and informs the driver that the VSC function is OFF.

5. Mutual System Control

To efficiently operate the VSC system at its optimal level, the VSC system and other control systems are mutually controlled while the VSC system is being operated

Engine throttle control

The engine power does not interfere with the VSC brake control by controlling the opening of the throttle and reducing the engine output

Engine control and electronically controlled transmission control

The strong braking force does not interfere with the braking force control of the VSC system by turning off the accel. and reducing changes in the driving torque at shift-down.

VSC system operation indication

The slip indicator light flashes and the buzzer sounds intermittently to warn the driver that the current road is slippery, while the VSC system is being operated.

6. Fail Safe Function

If an error occurs in the ABS & BA & TRAC & VSC ECU, sensor signals, and/or actuators, the ABS & BA & TRAC & VSC ECU inhibits the brake actuator control and inputs the error signal to the engine control module. According to the error signal, the brake actuator turns off the solenoid and the engine control module rejects any electronically controlled throttle open request from the VSC system. As a result, the vehicle functions without the ABS, BA, TRAC, and VSC systems.

Service Hints

A41 (A), A42 (B), A44 (D) ABS & BA & TRAC & VSC ECU

(D) 15-Ground . Always approx. 12 volts
(B) 6-Ground · Approx. 12 volts with ignition SW at ON or ST position
(D) 22-Ground : Approx. 12 volts with ignition SW at ON or ST position
(B) 10-Ground : Approx. 12 volts with brake pedal depressed
(A) 6, (A) 31, (B) 8, (B) 17-Ground : Always continuity

A12 ABS Speed Sensor Front LH

2-4 : Approx. 1.07 kΩ (20 °C, 68 °F)

A13 ABS Speed Sensor Front RH

1-2 : Approx. 1.07 kΩ (20 °C, 68 °F)

A35, A36 ABS Speed Sensor Rear LH, RH

1-2 : Approx. 1.2 kΩ (25 °C, 77 °F)

○ : Parts Location

Code		See Page	Code		See Page	Code	See Page
A12		68	A42	B	70	D7	70
A13		68	A43	C	70	E9	70
A35		72	A44	D	70	J2	71
A36		72	C12	A	70	M4	69
A37	A	68	C13	B	70	P1	69
A38	B	68	C14	C	70	P8	73
A39	C	68	C15	D	70	S5	71
A40	D	68	C17		70	V8	71
A41	A	70	D1		68	Y1	71

▭ : Relay Blocks

Code	See Page	Relay Blocks (Relay Block Location)
1	22	Engine Room R/B (Engine Compartment Left)

▭ : Junction Block and Wire Harness Connector

Code	See Page	Junction Block and Wire Harness (Connector Location)
2A	28	Engine Room No 2 Wire and Cowl Side J/B LH (Left Kick Panel)
2B		
2D	28	Dash Wire and Cowl Side J/B LH (Left Kick Panel)
2K	28	Floor No.1 Wire and Cowl Side J/B LH (Left Kick Panel)
2Q	30	Instrument Panel Integration Wire and Cowl Side J/B LH (Left Kick Panel)
3A	40	Engine Room No.2 Wire and Cowl Side J/B RH (Right Kick Panel)
3B		
3E	40	Dash Wire and Cowl Side J/B RH (Right Kick Panel)
3Q	42	Instrument Panel Integration Wire and Cowl Side J/B RH (Right Kick Panel)
5C	56	Dash Wire and J/B No.5 (Behind the Combination Meter)
5D	56	Engine Room No 2 Wire and J/B No 5 (Behind the Combination Meter)
6C	60	Dash Wire and J/B No.6 (Behind the Grove Box)
6D	60	Engine Wire and J/B No.6 (Behind the Grove Box)
7B	64	Dash Wire and J/B No.7 (Behind the Grove Box)
7D	64	Engine Room No 2 Wire and J/B No.7 (Behind the Grove Box)

: Connector Joining Wire Harness and Wire Harness

Code	See Page	Joining Wire Harness and Wire Harness (Connector Location)
IA2	78	Engine Room No 2 Wire and Floor No.1 Wire (Left Kick Panel)
IG1	78	Engine Room No.2 Wire and Dash Wire (Behind the Combination Meter)
IG4		
IH2	80	Instrument Panel Integration Wire and Column Wire (Near the Ignition SW)
II3	80	Dash Wire and Column Wire (Near the Ignition SW)
IN2	80	Engine Wire and Dash Wire (Behind the Glove Box)
IU4	82	Instrument Panel Integration Wire and Dash Wire (Behind the Glove Box)
IX1	82	Instrument Panel Integration Wire and Engine Wire (Behind the Glove Box)
Ib2	84	Dash Wire and Dash Wire (Behind the Combination Meter)
BD3	86	Floor No 3 Wire and Floor No 1 Wire (Left Rear Side Quarter Panel)
BF2	86	Frame Wire and Floor No 3 Wire (Left Side of Rear Floor Crossmember)

: Ground Points

Code	See Page	Ground Points Location
EC	76	Rear Bank of Right Cylinder Head
EE	76	Front Left Side of Fender Apron
IF	78	Set Bolt of Cowl Side J/B LH

: Splice Points

Code	See Page	Wire Harness with Splice Points	Code	See Page	Wire Harness with Splice Points
E13	76	Engine Room No 2 Wire	I2	80	Engine Room No 2 Wire
E14					

NOTICE: When inspecting or repairing the SRS, perform the operation in accordance with the following precautionary instructions and the procedure and precautions in the Repair Manual for the applicable model year.

- Malfunction symptoms of the SRS are difficult to confirm, so the DTCs become the most important source of information when troubleshooting. When troubleshooting the SRS, always inspect the DTCs before disconnecting the battery.
- **Work must be started after 90 seconds from when the ignition switch is turned to the "LOCK" position and the negative (-) terminal cable is disconnected from the battery.**
  (The SRS is equipped with a back-up power source so that if work is started within 90 seconds from disconnecting the negative (-) terminal cable of the battery, the SRS may be deployed.)
- When the negative (-) terminal cable is disconnected from the battery, the memory of the clock and audio system will be canceled. So before starting work, make a record of the contents memorized in the audio memory system. When work is finished, reset the audio systems as they were before and adjust the clock. This vehicle has power tilt and power telescopic steering, power seat and power outside rear view mirror which are all equipped with memory function. However, it is not possible to make a record of the memory contents. So when the work is finished, it will be necessary to explain this fact tot the customer, and ask the customer to adjust the features and reset the memory. To avoid erasing the memory in each memory system, never use a back-up power supply from outside the vehicle.
- Before repairs, remove the airbag sensor if shocks are likely to be applied to the sensor during repairs.
- Do not expose the steering wheel pad, front passenger airbag assembly, side airbag assembly, curtain shield airbag assembly, seat belt pretensioner, center airbag sensor assembly, front airbag sensor assembly or side airbag sensor assembly directly to hot air or flames.
- Even in cases of a minor collision where the SRS does not deploy, the steering wheel pad, front passenger airbag assembly, side airbag assembly, curtain shield airbag assembly, seat belt pretensioner, center airbag sensor assembly, front airbag sensor assembly and side airbag sensor assembly should be inspected.
- Never use SRS parts from another vehicle. When replacing parts, replace them with new parts.
- Never disassemble and repair the steering wheel pad, front passenger airbag assembly, side airbag assembly, curtain shield airbag assembly, seat belt pretensioner, center airbag sensor assembly, front airbag sensor assembly or side airbag sensor assembly in order to reuse it.
- If the steering wheel pad, front passenger airbag assembly, side airbag assembly, curtain shield airbag assembly, seat belt pretensioner, center airbag sensor assembly, front airbag sensor assembly or side airbag sensor assembly has been dropped, or if there are cracks, dents or other defects in the case, bracket or connector, replace them with new ones.
- Use a volt/ohmmeter with high impedance (10 kΩ/V minimum) for troubleshooting the system's electrical circuits.
- Information labels are attached to the periphery of the SRS components. Follow the instructions on the notices.
- After work on the SRS is completed, perform the SRS warning light check.
- If the vehicle is equipped with a mobile communication system, refer to the precaution in the IN section of the Repair Manual.

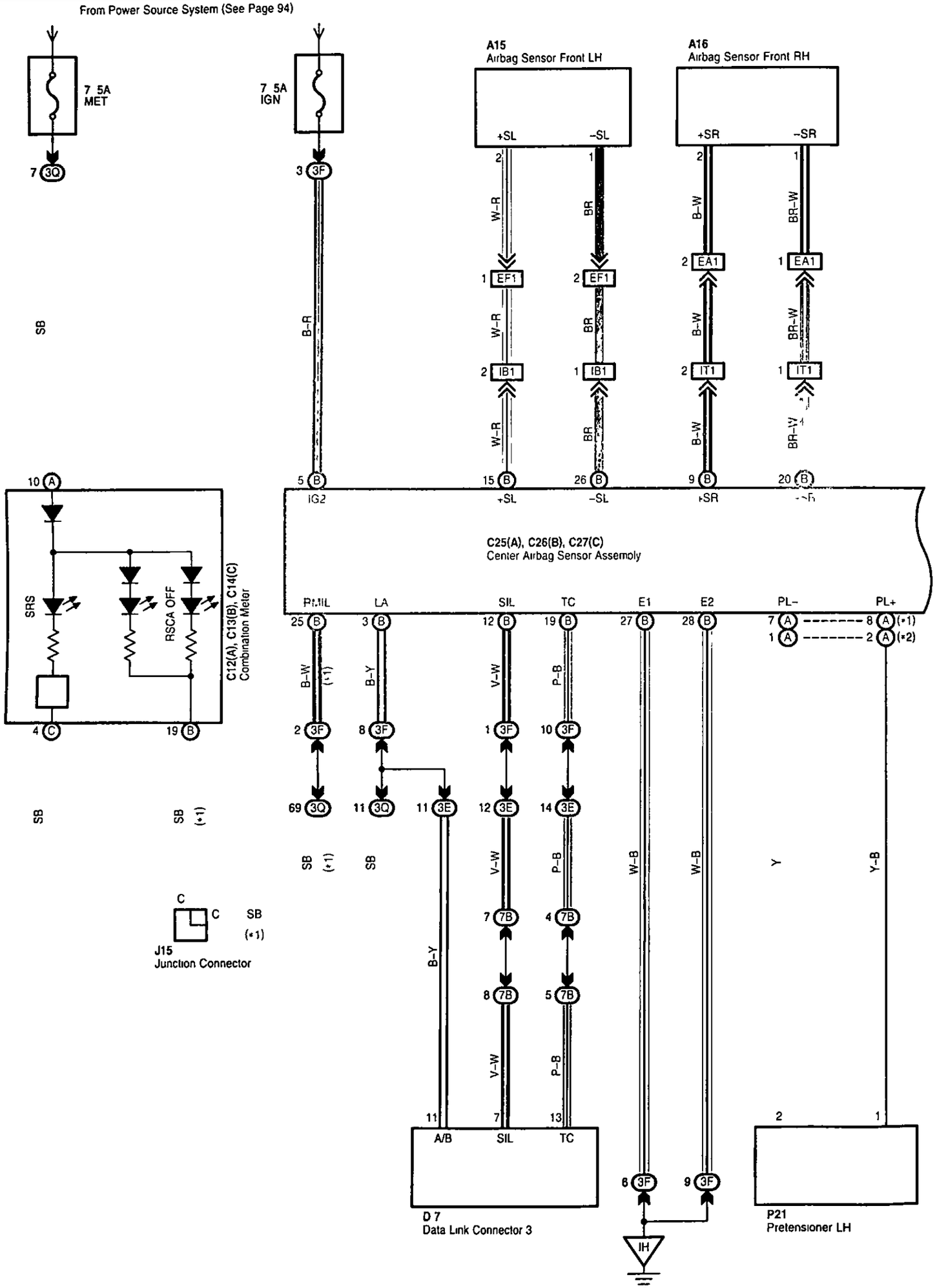
From Power Source System (See Page 94)
7.5A MET
7.5A IGN
A15
Airbag Sensor Front LH
A16
Airbag Sensor Front RH
+SL
-SL
+SR
-SR
EF1
IB1
EA1
IT1
W-R
BR
B-W
BR-W
B-R
SB
IG2
C25(A), C26(B), C27(C)
Center Airbag Sensor Assembly
PRMIL
LA
SIL
TC
E1
E2
PL-
PL+
B-W
B-Y
V-W
P-B
W-B
Y
Y-B
SRS
RSCA OFF
C12(A), C13(B), C14(C)
Combination Meter
J15
Junction Connector
D7
Data Link Connector 3
P21
Pretensioner LH
A/B
IH

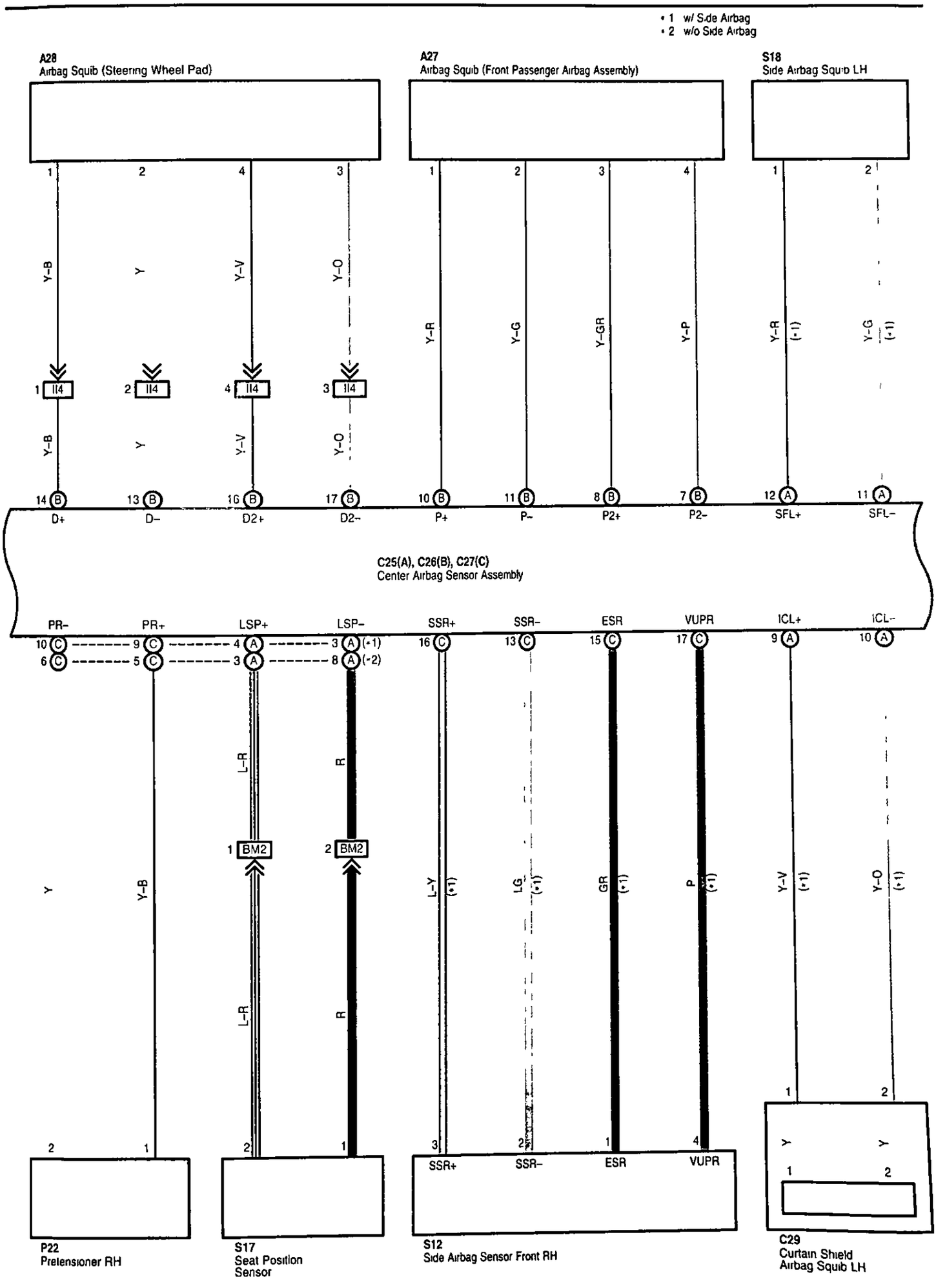
• 1 w/ Side Airbag
• 2 w/o Side Airbag
A28
Airbag Squib (Steering Wheel Pad)
A27
Airbag Squib (Front Passenger Airbag Assembly)
S18
Side Airbag Squib LH
Y-B
Y
Y-V
Y-O
Y-R
Y-G
Y-GR
Y-P
(•1)
(•1)
II4
D+
D−
D2+
D2−
P+
P−
P2+
P2−
SFL+
SFL−
C25(A), C26(B), C27(C)
Center Airbag Sensor Assembly
PR−
PR+
LSP+
LSP−
SSR+
SSR−
ESR
VUPR
ICL+
ICL−
(•1)
(•2)
L-R
R
BM2
L-Y
LG
GR
P
Y-V
Y-O
P22
Pretensioner RH
S17
Seat Position Sensor
S12
Side Airbag Sensor Front RH
C29
Curtain Shield Airbag Squib LH

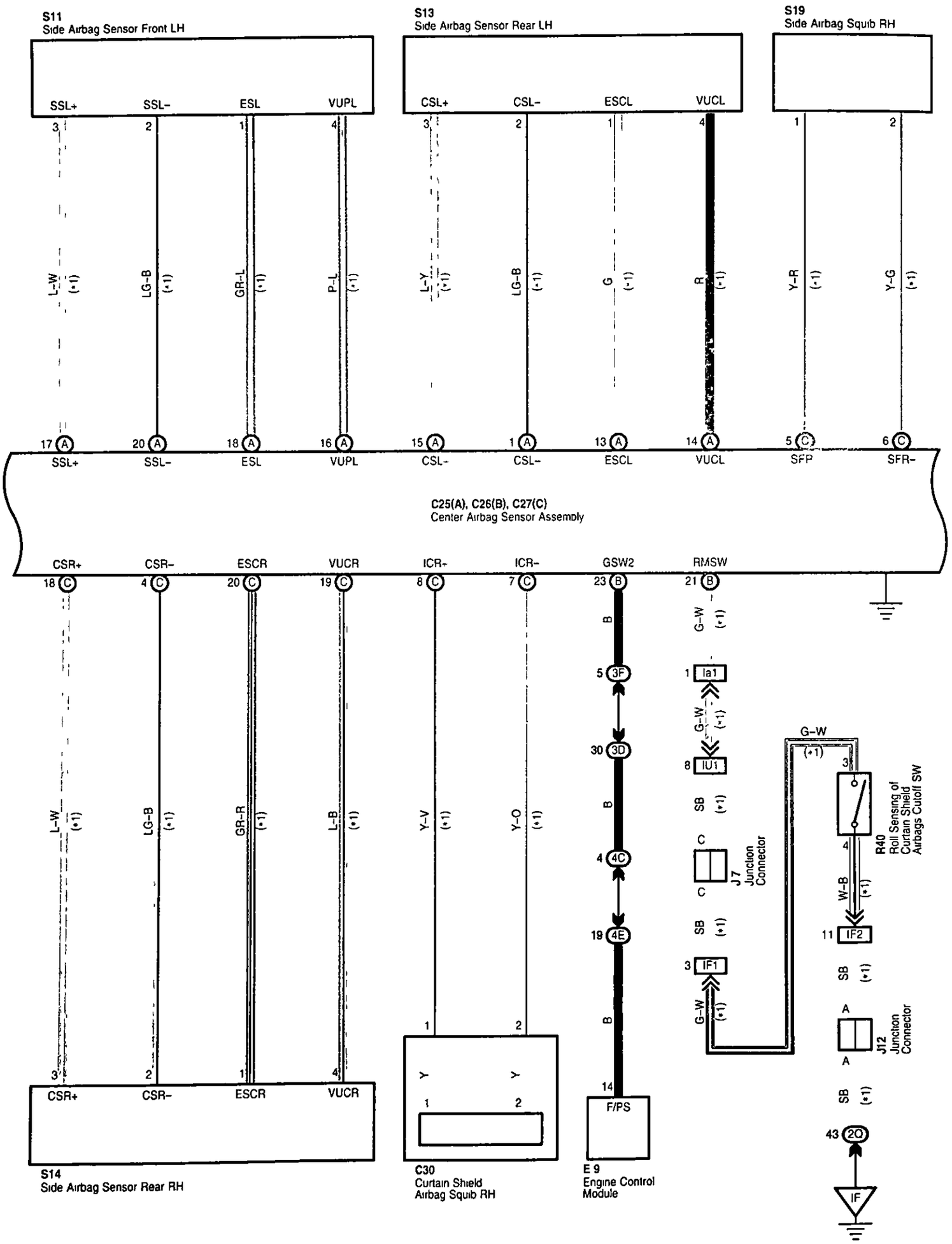
S11
Side Airbag Sensor Front LH
SSL+
SSL-
ESL
VUPL
S13
Side Airbag Sensor Rear LH
CSL+
CSL-
ESCL
VUCL
S19
Side Airbag Squib RH
L-W (*1)
LG-B (*1)
GR-L (*1)
P-L (*1)
L-Y (*1)
LG-B (*1)
G (*1)
R (*1)
Y-R (*1)
Y-G (*1)
17 A SSL+
20 A SSL-
18 A ESL
16 A VUPL
15 A CSL-
1 A CSL-
13 A ESCL
14 A VUCL
5 C SFP
6 C SFR-
C25(A), C26(B), C27(C)
Center Airbag Sensor Assembly
CSR+
CSR-
ESCR
VUCR
ICR+
ICR-
GSW2
RMSW
18 C
4 C
20 C
19 C
8 C
7 C
23 B
21 B
L-W (*1)
LG-B (*1)
GR-R (*1)
L-B (*1)
Y-V (*1)
Y-O (*1)
B
G-W (*1)
5 3F
30 3D
4 4C
19 4E
14
1 Ia1
8 IU1
3 IF1
SB (*1)
G-W (*1)
C
J7
Junction
Connector
G-W (*1)
3
4
R40
Roll Sensing of
Curtain Shield
Airbags Cutoff SW
W-B (*1)
11 IF2
SB (*1)
A
J12
Junction
Connector
SB (*1)
43 2Q
IF
3 CSR+
2 CSR-
1 ESCR
4 VUCR
S14
Side Airbag Sensor Rear RH
1
2
Y
Y
C30
Curtain Shield
Airbag Squib RH
F/PS
E 9
Engine Control
Module

• 1 w/ Side Airbag
• 2 w/o Side Airbag

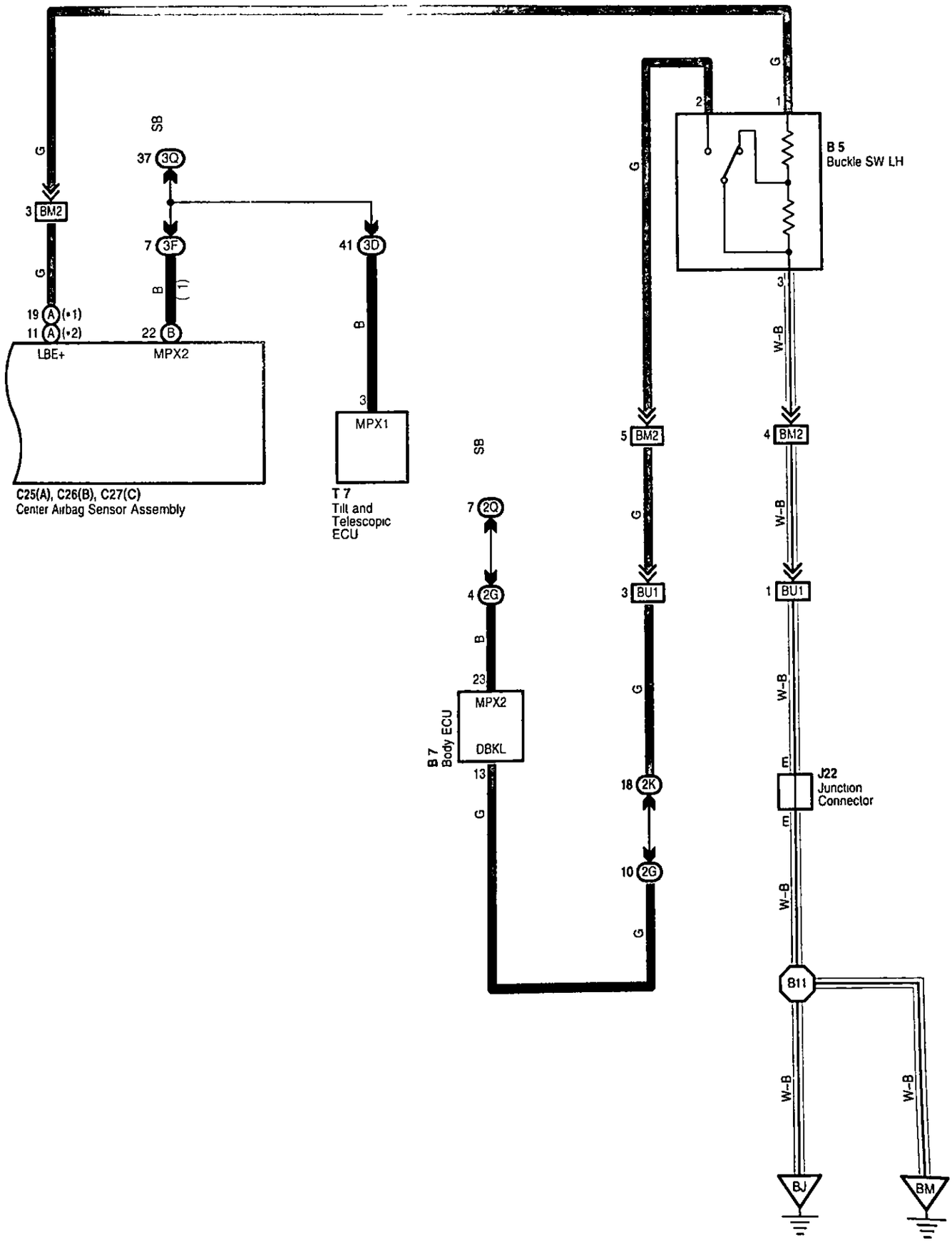

SRS

System Outline

- The SRS airbag are provided for the driver and front passenger The SRS airbags have been designed to help reducing the shocks to the heads and chests of the driver and front passenger in the event of a severe frontal impact collision as supplements to the seat belts.
  This system is a 3-sensor type airbag system to detect the impact during a front collision using the center airbag sensor assembly and airbag sensor front LH, RH, and to make the airbag system and pretensioner operate as well.
- In this system, a front side collision is detected by the side airbag sensor front LH, RH in order to simultaneously deploy the side and curtain shield airbags. A rear side collision is detected by the side airbag sensor rear LH, RH in order to deploy only the curtain shield airbag
- Roll sensing of curtain shield airbags control has been adopted in order to deploy the curtain shield airbags and the pretensioners for the driver and front passenger, in the event that the vehicle rolls over.
  A roll sensing of curtain shield airbags cutoff SW is provided on the driver side of the instrument panel to enable the driver to disable this system
- Dual-stage SRS airbags system, that controls the airbag inflating output optimum by judging the extent of impact and seat position (Driver seat), has been used for the driver and front passenger airbags.
- In accordance with the adoption of the dual-stage SRS airbag system, a seat position sensor has been established for the driver seat.
- This system has adopted a fuel cut control that stops the fuel pump when the airbag is deployed.

○ : Parts Location

Code	See Page	Code	See Page	Code	See Page
A15	68	C27 C	70	R40	71
A16	68	C29	72	S11	73
A27	70	C30	72	S12	73
A28	70	D7	70	S13	73
B5	74	E9	70	S14	73
B7	70	J7	71	S17	74
C12 A	70	J12	71	S18	74
C13 B	70	J15	71	S19	74
C14 C	70	J22	72	T7	71
C25 A	70	P21	73		
C26 B	70	P22	73		

⬭ : Junction Block and Wire Harness Connector

Code	See Page	Junction Block and Wire Harness (Connector Location)
2G	28	Dash Wire and Cowl Side J/B LH (Left Kick Panel)
2K	28	Floor No 1 Wire and Cowl Side J/B LH (Left Kick Panel)
2Q	30	Instrument Panel Integration Wire and Cowl Side J/B LH (Left Kick Panel)
3D	40	Dash Wire and Cowl Side J/B RH (Right Kick Panel)
3E		
3F		
3Q	42	Instrument Panel Integration Wire and Cowl Side J/B RH (Right Kick Panel)
4C	52	Dash Wire and J/B No.4 (Instrument Panel Center)
4E		
7B	64	Dash Wire and J/B No.7 (Behind the Grove Box)

: Connector Joining Wire Harness and Wire Harness

Code	See Page	Joining Wire Harness and Wire Harness (Connector Location)
EA1	76	Engine Room Main Wire and Engine Room No 2 Wire (Engine Compartment Right)
EF1	76	Engine Room No 2 Wire and Engine Room Main Wire (Under the Engine Room J/B)
IB1	78	Engine Room No.2 Wire and Dash Wire (Left Kick Panel)
IF1	78	Instrument Panel Integration Wire and Instrument Panel Wire (Left Side of Instrument Panel)
IF2		
II4	80	Dash Wire and Column Wire (Near the Ignition SW)
IT1	80	Engine Room No 2 Wire and Dash Wire (Right Kick Panel)
IU1	82	Instrument Panel Integration Wire and Dash Wire (Behind the Glove Box)
Ia1	84	Dash Wire and Dash Wire (Behind the Combination Meter)
BM2	90	Floor No 1 Wire and Front Seat LH Wire (Front Side Under the Driver's Seat)
BU1	88	Floor No 1 Wire and Floor No.1 Wire (Near the Left Rear Suspension Support)

: Ground Points

Code	See Page	Ground Points Location
IF	78	Set Bolt of Cowl Side J/B LH
IH	78	Set Bolt of Cowl Side J/B RH
BJ	86	Under the Driver's Seat
BM	86	Left Rear Side Quarter Panel

: Splice Points

Code	See Page	Wire Harness with Splice Points	Code	See Page	Wire Harness with Splice Points
B11	88	Floor No 1 Wire			

Shift Lock

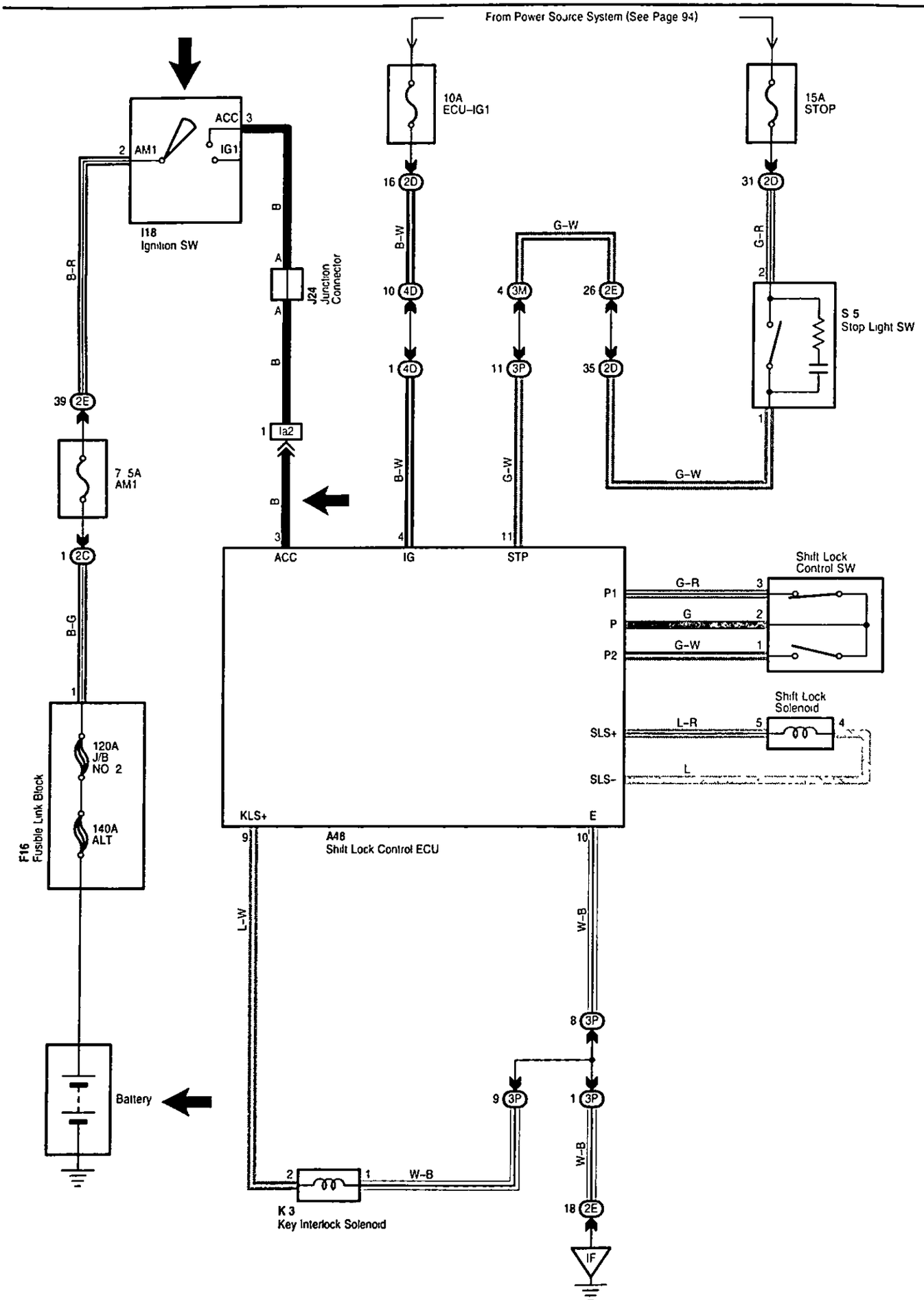

Correction to Pub.No. EWD510U(Bulletin No. OB-2195)

System Outline

1. Shift Lock Mechanism

When the brake pedal is depressed with the ignition SW is turned on (Stop light SW on), the shift lock control ECU is activated and allows the driver to change the shift lever to a position other than P position.

2. Key Interlock Mechanism

When the ignition SW is turned on and the shift lever is at a position other than P position, shift lock control ECU is activated to flow current to the key interlock solenoid. This inhibits to turn the ignition SW from on to OFF position.

Service Hints

A48 Shift Lock Control ECU

3–Ground : Approx 12 volts with ignition SW at ACC or ON position
4–Ground . Approx. 12 volts with ignition SW at ON or ST position
11–Ground . Approx. 12 volts with brake pedal depressed
10–Ground : Always continuity

○ : Parts Location

Code	See Page	Code	See Page	Code	See Page
A48	70	I18	70	K3	71
F16	68	J24	71	S5	71

▢ : Junction Block and Wire Harness Connector

Code	See Page	Junction Block and Wire Harness (Connector Location)
2C	28	Dash Wire and Cowl Side J/B LH (Left Kick Panel)
2D		
2E		
3M	43	Dash Wire and Cowl Side J/B RH (Right Kick Panel)
3P		
4D	52	Dash Wire and J/B No 4 (Instrument Panel Center)

□ : Connector Joining Wire Harness and Wire Harness

Code	See Page	Joining Wire Harness and Wire Harness (Connector Location)
Ia2	84	Dash Wire and Dash Wire (Behind the Combinatieon Meter)

▽ : Ground Points

Code	See Page	Ground Points Location
IF	78	Set Bolt of Cowl Side J/B LH

Center Differential Lock

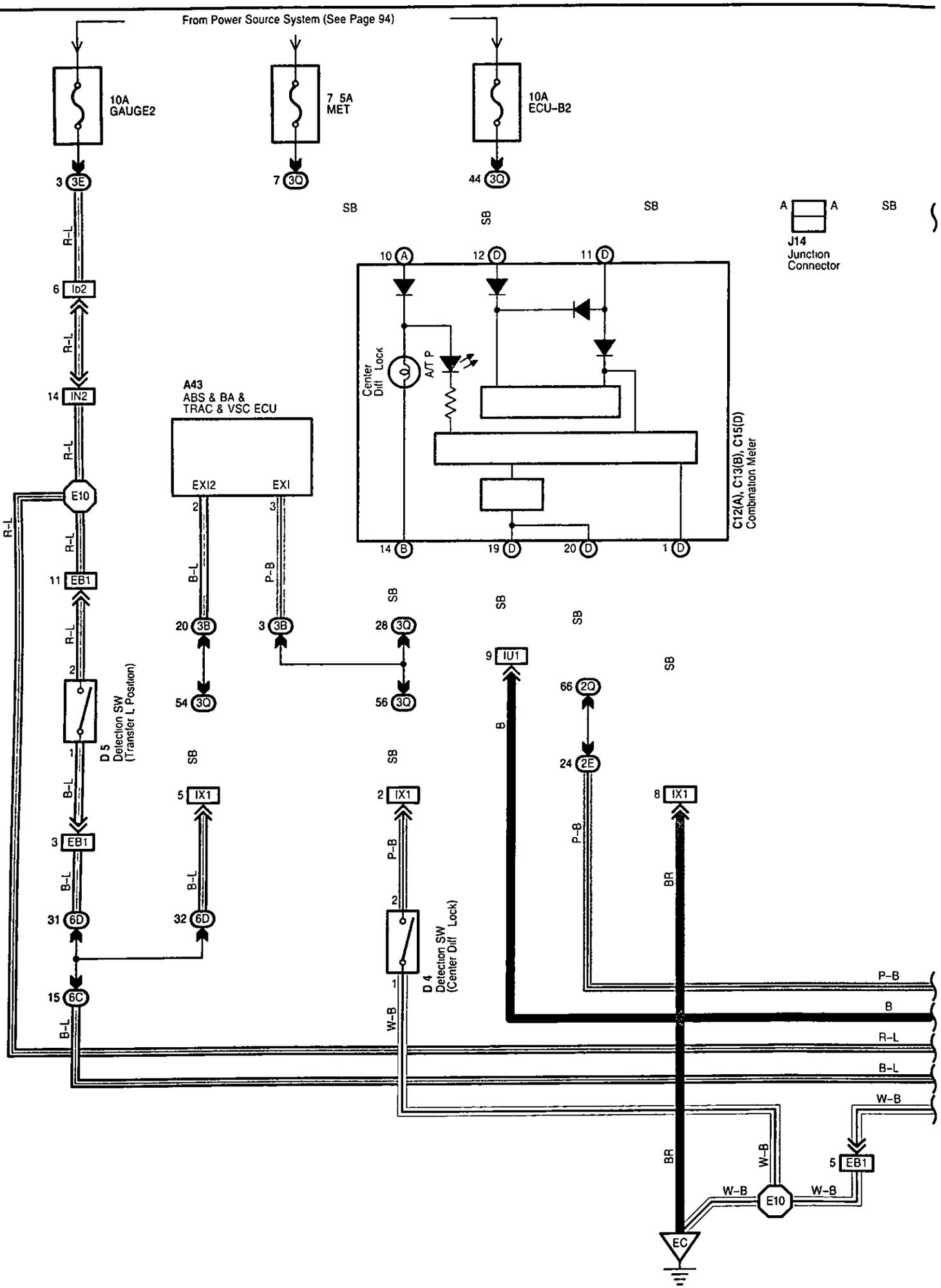

From Power Source System (See Page 94)

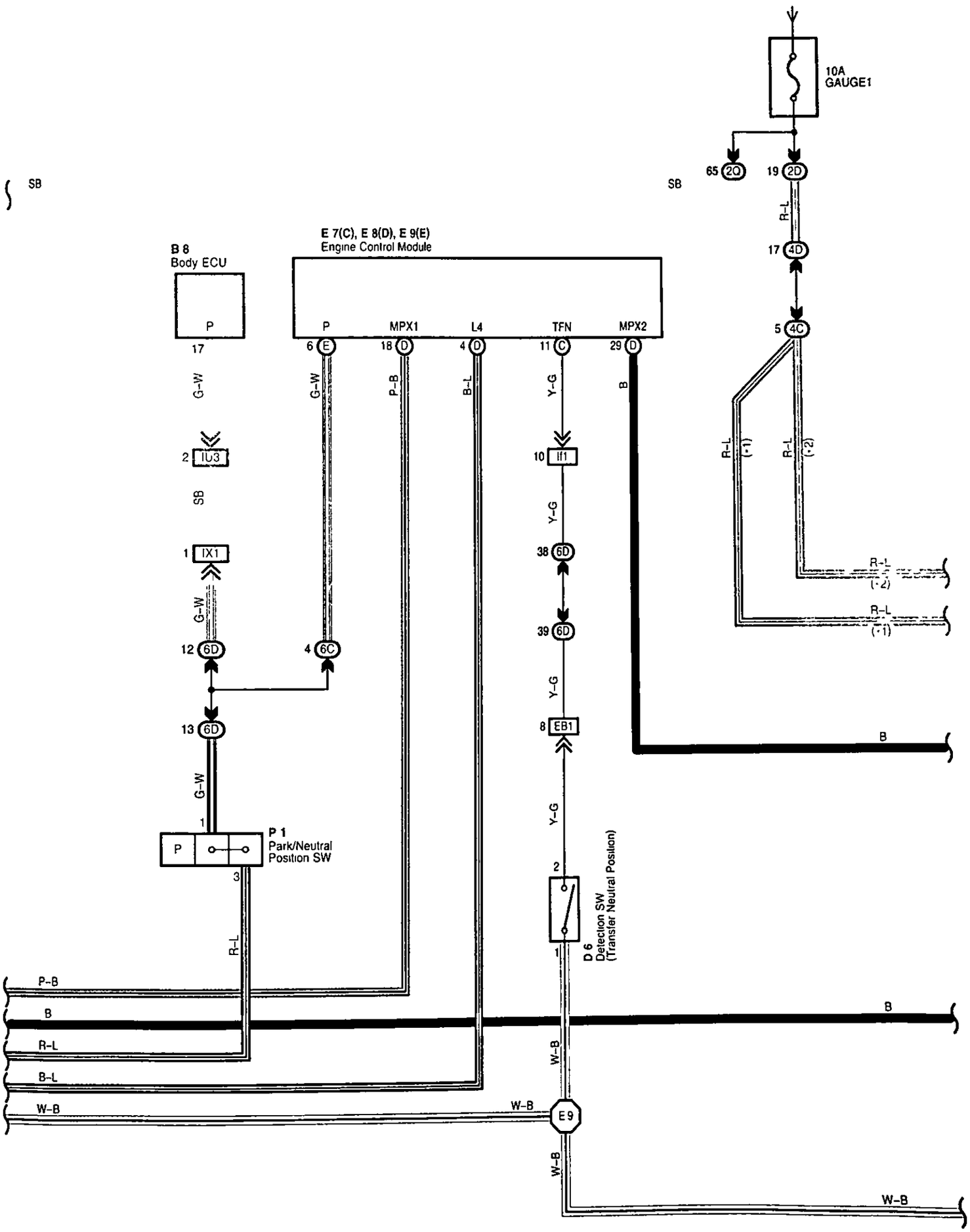

• 1 : w/ Navigation System
• 2 : w/o Navigation System

Center Differential Lock

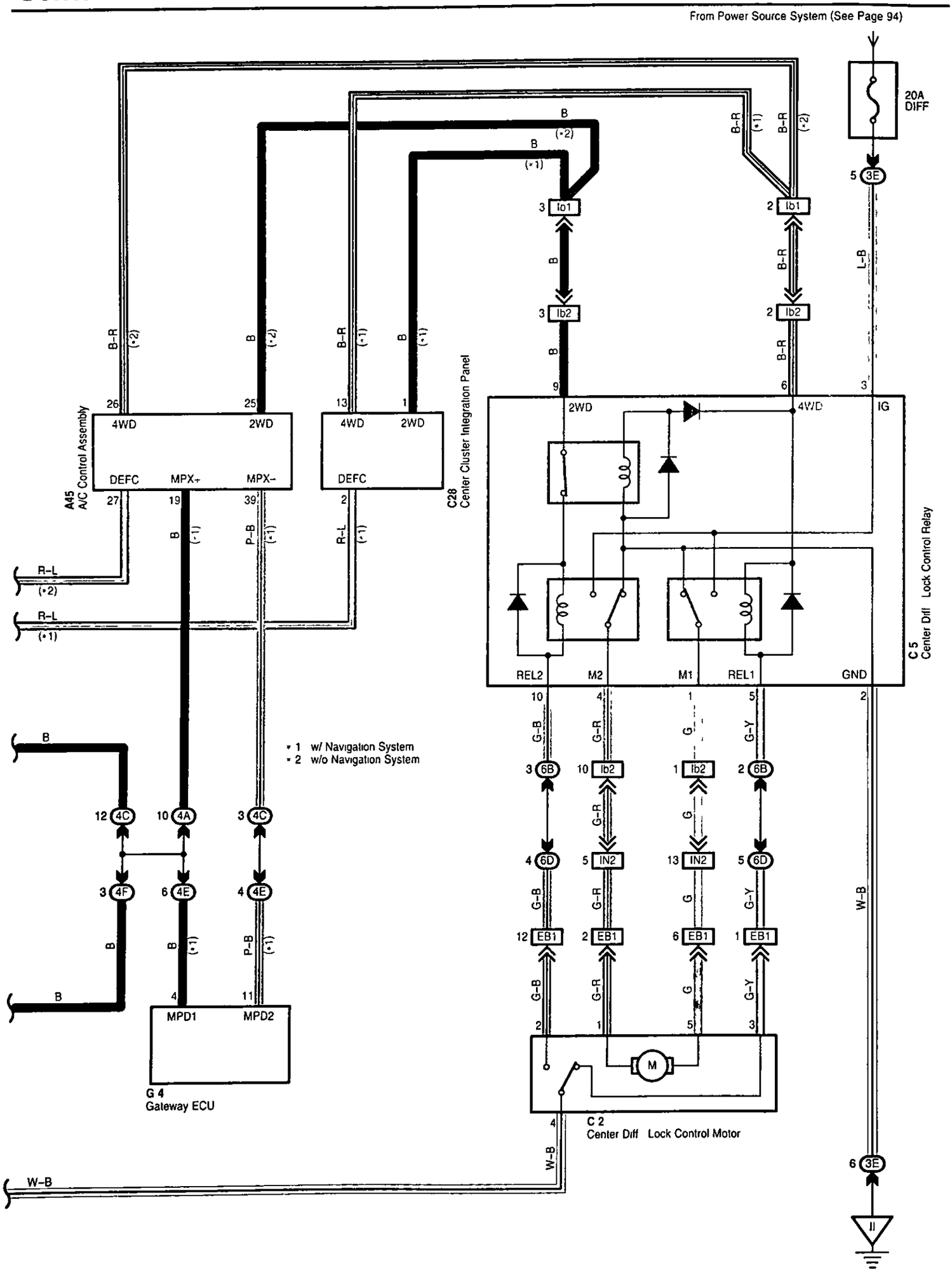

Service Hints

C5 Center Diff. Lock Control Relay

3-Ground : Approx. 12 volts with ignition SW at ON or ST position

2-Ground : Always continuity

○ : Parts Location

Code	See Page	Code	See Page	Code	See Page
A43	70	C13 B	70	E7 C	70
A45	70	C15 D	70	E8 D	70
B8	70	C28	70	E9 E	70
C2	68	D4	68	G4	70
C5	70	D5	68	J14	71
C12 A	70	D6	68	P1	69

▢ : Junction Block and Wire Harness Connector

Code	See Page	Junction Block and Wire Harness (Connector Location)
2D 2E	28	Dash Wire and Cowl Side J/B LH (Left Kick Panel)
2Q	30	Instrument Panel Integration Wire and Cowl Side J/B LH (Left Kick Panel)
3B	40	Engine Room No.2 Wire and Cowl Side J/B RH (Right Kick Panel)
3E	40	Dash Wire and Cowl Side J/B RH (Right Kick Panel)
3Q	42	Instrument Panel Integration Wire and Cowl Side J/B RH (Right Kick Panel)
4A 4C 4D 4E 4F	52	Dash Wire and J/B No 4 (Instrument Panel Center)
6B 6C	60	Dash Wire and J/B No 6 (Behind the Grove Box)
6D	60	Engine Wire and J/B No 6 (Behind the Grove Box)

□ : Connector Joining Wire Harness and Wire Harness

Code	See Page	Joining Wire Harness and Wire Harness (Connector Location)
EB1	76	Engine Wire and Transmission Wire (On the Transmission)
IN2	80	Engine Wire and Dash Wire (Behind the Glove Box)
IU1 IU3	82	Instrument Panel Integration Wire and Dash Wire (Behind the Glove Box)
IX1	82	Instrument Panel Integration Wire and Engine Wire (Behind the Glove Box)
Ib1 Ib2	84	Dash Wire and Dash Wire (Behind the Combination Meter)
If1	84	Engine Wire and Engine Wire (Behind the Glove Box)

▽ : Ground Points

Code	See Page	Ground Points Location
EC	76	Rear Bank of Right Cylinder Head
II	78	Set Bolt of Cowl Side J/B RH

⬡ : Splice Points

Code	See Page	Wire Harness with Splice Points	Code	See Page	Wire Harness with Splice Points
E9	76	Transmission Wire	E10	76	Engine Wire

Power Window

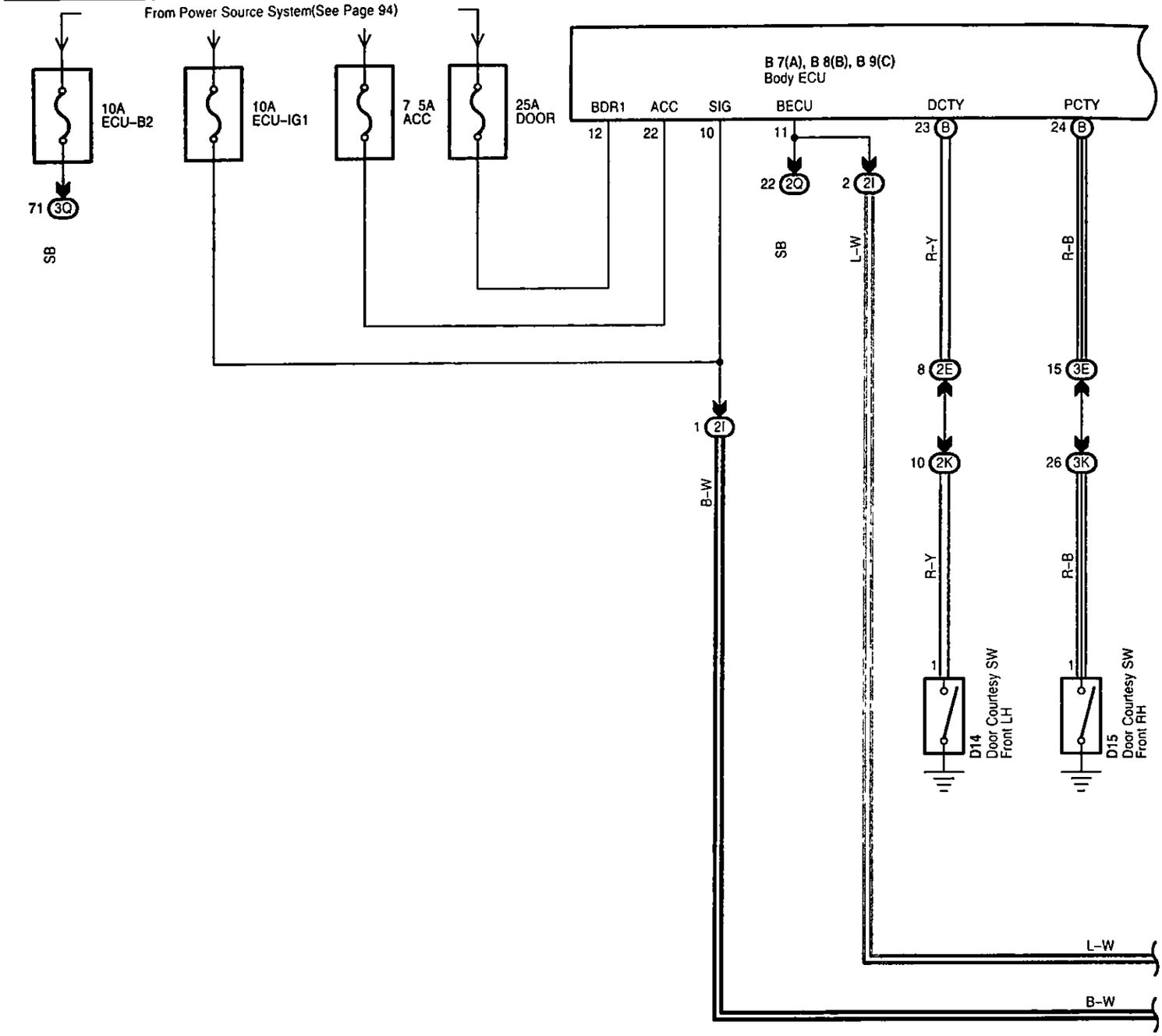

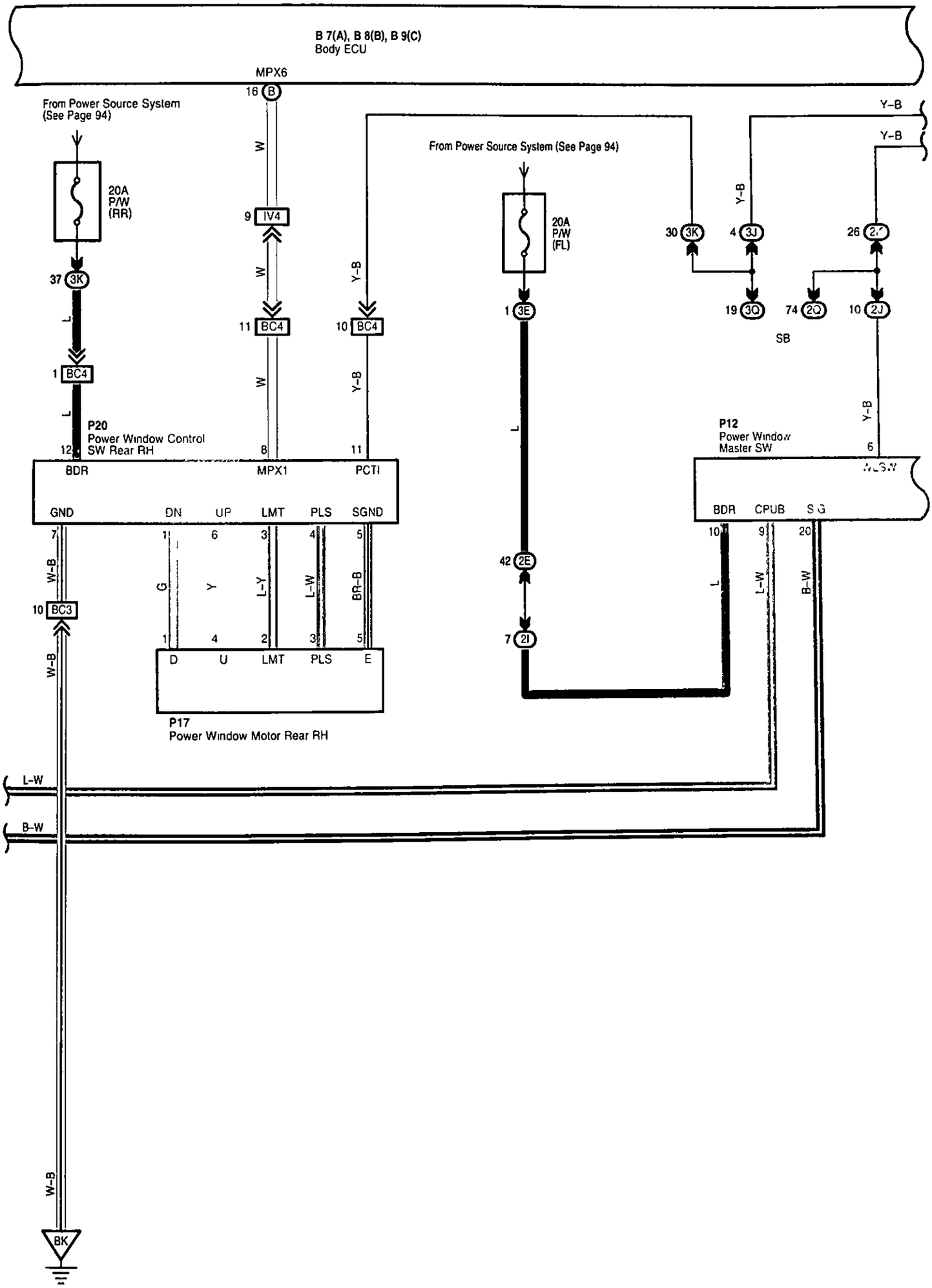
B 7(A), B 8(B), B 9(C)
Body ECU
MPX6
16 B
From Power Source System
(See Page 94)
20A
P/W
(RR)
37 3K
1 BC4
P20
Power Window Control
SW Rear RH
12
BDR
GND
7
W-B
10 BC3
W-B
W
9 IV4
W
11 BC4
W
8
MPX1
DN
UP
LMT
PLS
G
Y
L-Y
L-W
1
6
3
4
5
1
4
2
3
5
D
U
LMT
PLS
E
P17
Power Window Motor Rear RH
Y-B
10 BC4
Y-B
11
PCTI
SGND
BR-B
From Power Source System (See Page 94)
20A
P/W
(FL)
1 3E
L
42 2E
7 2I
30 3K
4 3J
Y-B
19 3Q
74 2Q
SB
26
10 2J
Y-B
Y-B
Y-B
P12
Power Window
Master SW
6
BDR
CPUB
10
9
20
L
L-W
B-W
L-W
B-W
W-B
BK

Power Window

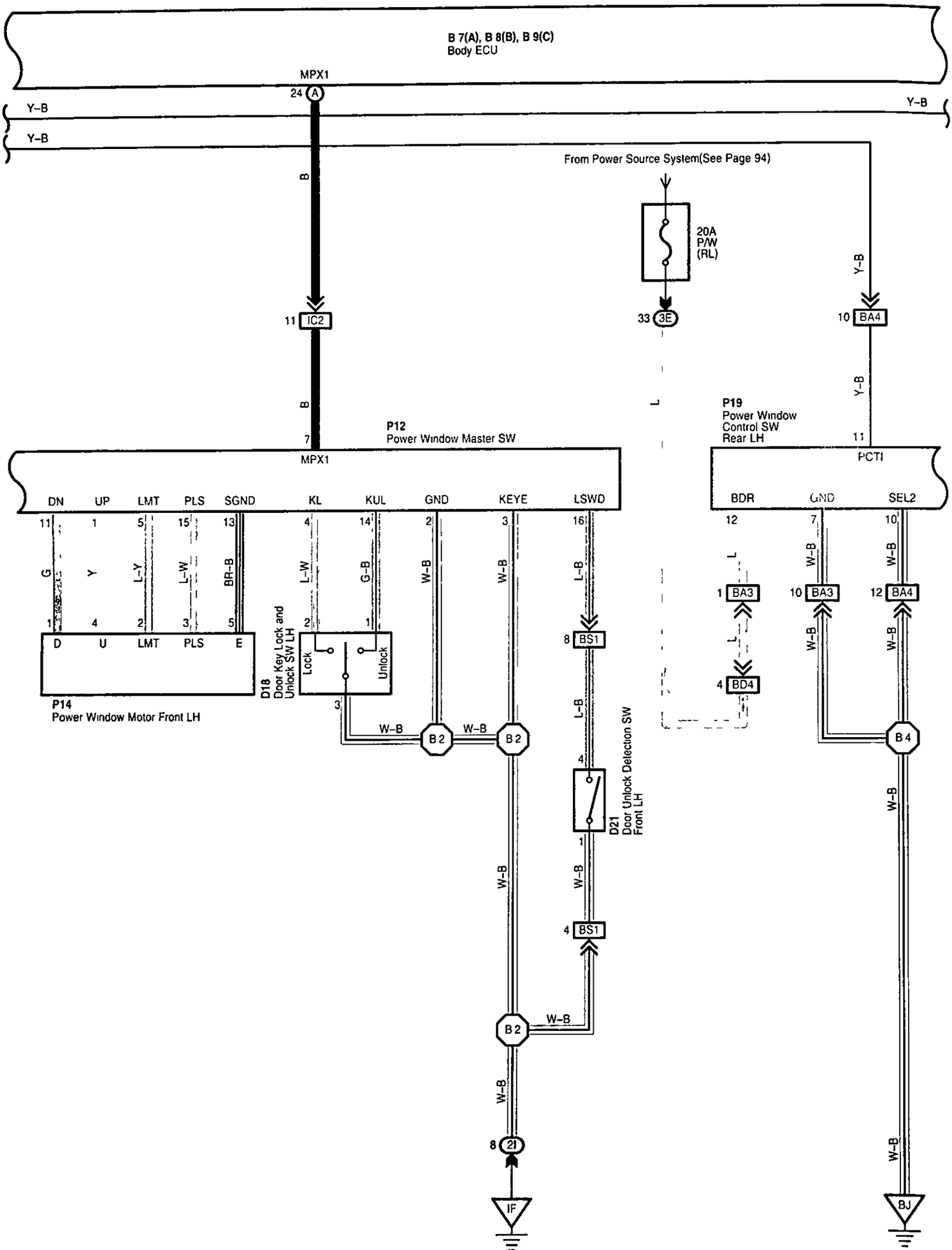

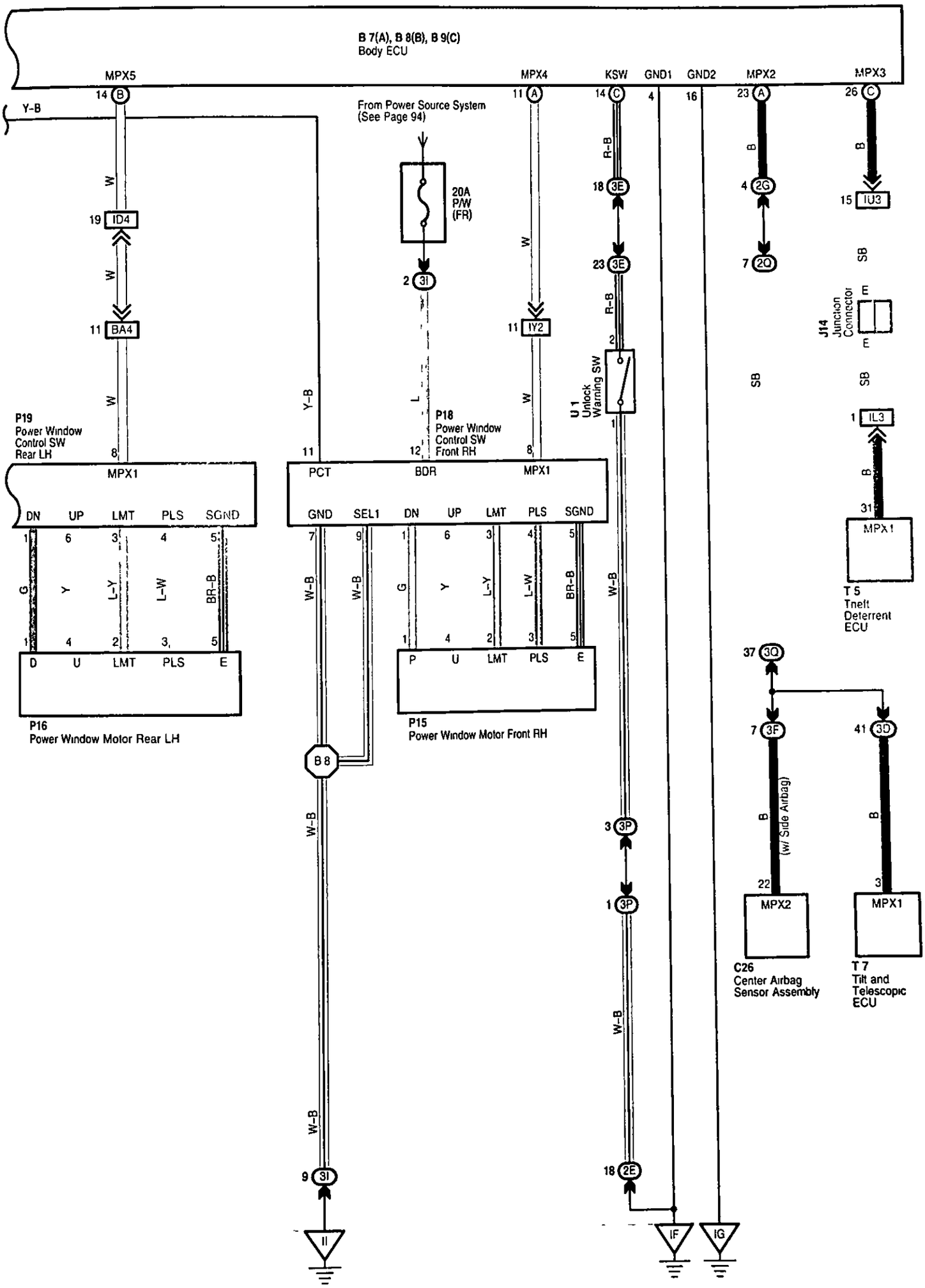
B 7(A), B 8(B), B 9(C)
Body ECU
MPX5
MPX4
KSW
GND1
GND2
MPX2
MPX3
Y-B
From Power Source System
(See Page 94)
20A
P/W
(FR)
ID4
BA4
IY2
IU3
IL3
J14
Junction
Connector
U 1
Unlock
Warning SW
P19
Power Window
Control SW
Rear LH
P18
Power Window
Control SW
Front RH
MPX1
PCT
BDR
DN
UP
LMT
PLS
SGND
GND
SEL1
D
U
P
E
P16
Power Window Motor Rear LH
P15
Power Window Motor Front RH
B 8
T 5
Theft
Deterrent
ECU
(w/ Side Airbag)
C26
Center Airbag
Sensor Assembly
T 7
Tilt and
Telescopic
ECU
IF
IG
II

Power Window

System Outline

1. Manual Down or Up Operation

When the power window master SW is pressed one step, the current flows from the power window master SW TERMINAL DN to the power window motor front LH to the power window master SW TERMINAL UP to GROUND, and rotates the motor to open the window.

When the power window master SW is pulled one step, the current flows from the power window master SW TERMINAL UP to the power window motor front LH to the power window master SW TERMINAL DN to GROUND, and rotates the motor to close the window.

For the other windows, as the power window master SW and the power window SW is operated, the relevant door window is opened or closed.

2. Auto Down or Up Operation

When the power window master SW is pushed two steps, the power window master SW determines it is in auto mode and the current flows from the power window master SW TERMINAL DN to the power window motor front LH to the power window master SW TERMINAL UP to GROUND, and rotates the motor to open the window automatically.

When the power window master SW is pulled two steps, the power window master SW determines it is in auto mode and the current flows from the power window master SW TERMINAL UP to the power window motor front LH to the power window master SW TERMINAL DN to GROUND, and rotates the motor to close the window automatically.

Accordingly, when each window switch of the power window control SW is operated, the relevant door window is automatically opened/closed.

3. Catching Prevention Function

When any foreign matter is caught in the window during power window up operation, the pulse sensor in the power window motor detects the changes in the number of motor rotations and forcibly opens the door window 50 mm, or when the window opening is less than 200 mm, it opens the window until the opening is 200 mm.

4. Key Off Power Window Operation

It is possible to operate the power window for approx. 43 seconds after the ignition SW is turned from on to off. However, when the door is opened while the window is being operated, the power window operation is stopped even though 43 seconds have not elapsed.

○ : Parts Location

Code		See Page	Code	See Page	Code	See Page
B7	A	70	D21	72	P18	73
B8	B	70	J14	71	P19	73
B9	C	70	P12	73	P20	73
C26		70	P14	73	T5	71
D14		72	P15	73	T7	71
D15		72	P16	73	U1	71
D18		72	P17	73		

▭ : Junction Block and Wire Harness Connector

Code	See Page	Junction Block and Wire Harness (Connector Location)
2E	28	Dash Wire and Cowl Side J/B LH (Left Kick Panel)
2G		
2I	28	Front Door LH Wire and Cowl Side J/B LH (Left Kick Panel)
2J		
2K	28	Floor No 1 Wire and Cowl Side J/B LH (Left Kick Panel)
2Q	30	Instrument Panel Integration Wire and Cowl Side J/B LH (Left Kick Panel)
3D	40	Dash Wire and Cowl Side J/B RH (Right Kick Panel)
3E		
3F		
3I	40	Front Door RH Wire and Cowl Side J/B RH (Right Kick Panel)
3J		
3K	40	Floor No 2 Wire and Cowl Side J/B RH (Right Kick Panel)
3P	43	Dash Wire and Cowl Side J/B RH (Right Kick Panel)
3Q	42	Instrument Panel Integration Wire and Cowl Side J/B RH (Right Kick Panel)

: Connector Joining Wire Harness and Wire Harness

Code	See Page	Joining Wire Harness and Wire Harness (Connector Location)
IC2	78	Front Door LH Wire and Dash Wire (Left Kick Panel)
ID4	78	Dash Wire and Floor No 1 Wire (Left Kick Panel)
IL3	80	Instrument Panel Integration Wire and Computer Wire (Instrument Panel Center)
IU3	82	Instrument Panel Integration Wire and Dash Wire (Behind the Glove Box)
IV4	82	Dash Wire and Floor No 2 Wire (Right Kick Panel)
IY2	82	Front Door RH Wire and Dash Wire (Right Kick Panel)
BA3	86	Rear Door LH Wire and Floor No.1 Wire (Left Side of Center Pillar)
BA4		
BC3	86	Rear Door RH Wire and Floor No 2 Wire (Right Side of Center Pillar)
BC4		
BD4	86	Floor No 3 Wire and Floor No 1 Wire (Left Rear Side Quarter Panel)
BS1	88	Door Lock LH Sub Wire and Front Door LH Wire (Front Door LH)

: Ground Points

Code	See Page	Ground Points Location
IF	78	Set Bolt of Cowl Side J/B LH
IG		
II	78	Set Bolt of Cowl Side J/B RH
BJ	86	Under the Driver's Seat
BK	86	Front Side Under the Front Passenger's Seat

: Splice Points

Code	See Page	Wire Harness with Splice Points	Code	See Page	Wire Harness with Splice Points
B2	88	Front Door LH Wire	B8	88	Front Door RH Wire
B4	88	Floor No.1 Wire			

Moon Roof

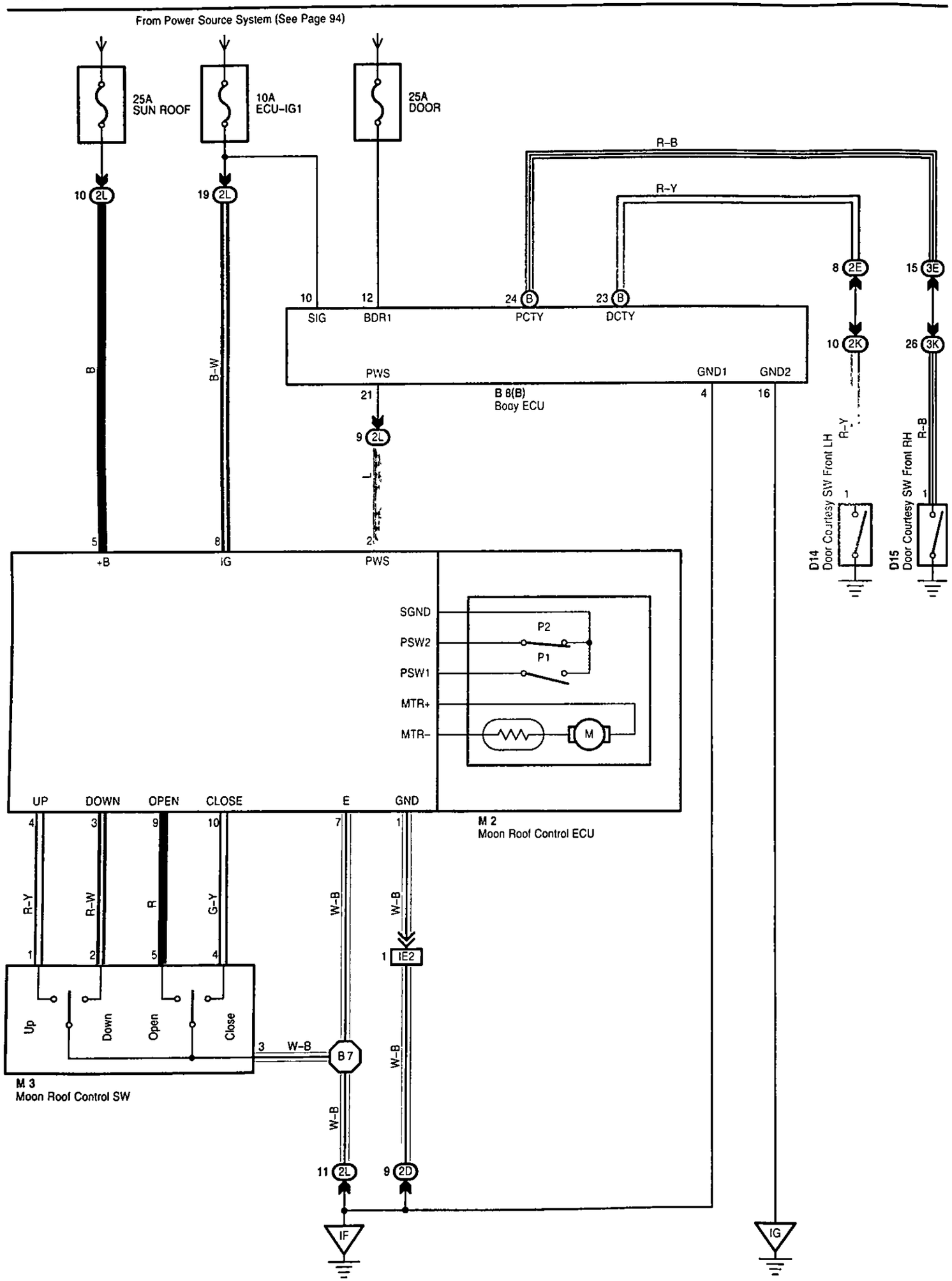
From Power Source System (See Page 94)
25A SUN ROOF
10A ECU-IG1
25A DOOR
R-B
R-Y
10 2L
19 2L
8 2E
15 3E
10 2K
26 3K
10 SIG
12 BDR1
24 B PCTY
23 B DCTY
PWS
GND1
GND2
21
4
16
B 8(B)
Body ECU
9 2L
B
B-W
L
R-Y
R-B
D14 Door Courtesy SW Front LH
D15 Door Courtesy SW Front RH
5 +B
8 IG
2 PWS
SGND
PSW2
PSW1
MTR+
MTR-
P2
P1
M
UP
DOWN
OPEN
CLOSE
E
GND
4
3
9
10
7
1
M 2
Moon Roof Control ECU
R-Y
R-W
R
G-Y
W-B
W-B
1
2
5
4
1 IE2
Up
Down
Open
Close
3 W-B
B 7
W-B
W-B
11 2L
9 2D
IF
IG
M 3
Moon Roof Control SW

System Outline

In this system, the HALL IC in the moon roof control ECU detects the changes in motor rotation, and allows opening/closing, tilting up/down of the moon roof by one touch operation.
In addition, catching prevention function during moon roof operation is also provided.
Voltage is constantly applied from the SUN ROOF fuse to the moon roof control ECU TERMINAL 5 of the moon roof control ECU.
When the ignition SW is turned on, the current flows from the ECU-IG1 fuse to TERMINAL 8 of the moon roof control ECU.

1. Slide Open Operation

When the moon roof control SW is kept pressed to OPEN position for approx. 0.3 seconds or longer (Limit SW No.1 off, limit SW No.2 on), a signal is input from the moon roof control SW TERMINAL 5 to the moon roof control ECU TERMINAL 9. This activates the moon roof control ECU and rotates the motor to open the moon roof automatically However, in case of pressing the moon roof control SW for 0.3 seconds or less, the moon roof can be operated manually. Then, when the limit SW No.1 is turned on and then turned off again, the pulse signal sent from the HALL IC activates the moon roof control ECU, and determines that the moon roof is fully open, and stops the motor. If other operation SW or the open SW is operated while the moon roof is being opened, the moon roof control ECU is activated to stop the moon roof operation. In addition, when the moon roof is tilted up, the slide open operation does not function.

2. Slide Close Operation

When the moon roof control SW is kept pressed to CLOSE position for approx. 0.3 seconds or longer (Limit SW No 1 off, limit SW No.2 off), a signal is input from the moon roof control SW TERMINAL 4 to the moon roof control ECU TERMINAL 10. This activates the moon roof control ECU and rotates the motor to close the moon roof automatically. However, in case of pressing the moon roof control SW for 0.3 seconds or less, the moon roof can be operated manually. Then, when the limit SW No.2 is turned on, the pulse signal sent from the HALL IC activates the moon roof control ECU, and determines that the moon roof is closed fully, and stops the motor. If other operation SW or the close SW is operated while the moon roof is being closed, the moon roof control ECU is activated to stop the moon roof operation

3. Tilt Up Operation

When the moon roof control SW is kept pressed to UP position for approx. 0.3 seconds or longer (Limit SW No.1 off, limit SW No 2 on), a signal is input from the moon roof control SW TERMINAL 1 to the moon roof control ECU TERMINAL 4 This activates the moon roof control ECU and rotates the motor to tilt up the moon roof automatically. If the pulse signal is not input from the HALL IC for 0 5 seconds or longer, it determines that the moon roof is fully tilted up, and stops the motor. If other operation SW or the tilt up SW is operated while the moon roof is being tilted up, the moon roof control ECU is activated to stop the moon roof operation. In addition, when the moon roof is opened, the tilt up operation does not function.

4. Tilt Down Operation

When the moon roof control SW is kept pressed to DOWN position for approx. 0.3 seconds or longer (Limit SW No.1 on, limit SW No.2 on), a signal is input from the moon roof control SW TERMINAL 2 to the moon roof control ECU TERMINAL 3. This activates the moon roof control ECU and rotates the motor to tilt down the moon roof automatically.
Then, when the limit SW No.1 is turned off, the pulse signal sent from the HALL IC activated the moon roof control ECU, and determines that the moon roof is closed fully, and stops the motor.
If other operation SW or the tilt down SW is operated while the moon roof is being tilted down, the moon roof control ECU is activated to stop the moon roof operation.

5. Catching Prevention Function

During slide close or tilt down operation, if the moon roof control ECU detects a catching load from the changes in the rotation of the motor, the operation is stopped, and the motor is rotated in the reverse direction.

* Slide close operation
  The moon roof is moved approx. 200 mm in the reverse direction (Slide open) after a catching load has been detected. However, if the full open position is detected before moving approx. 200 mm, the reverse movement is stopped.
* Tilt down operation
  If a catching load is detected, the moon roof is moved in the reverse direction until fully tilted up.

6. Key Off Moon Roof Operation

Within approx. 43 seconds after the ignition SW is turned from on to off, the moon roof can be operated. However, if the driver or front passenger door is opened during this period of time, the moon roof operation is stopped even though 43 seconds have not elapsed.

7. Fail-Safe Function

If the moon roof is operated continuously in the same direction, the current flowing to the motor is cut off when the time shown below has elapsed after the motor operation has been started.

* Slide open/close operation by the moon roof SW approx. 20 seconds
* Tilt up/down operation by the moon roof SW approx. 2 second
* Slide open operation for reverse movement in case of catching prevention function approx. 20 seconds
* Tilt up operation for reverse movement in case of catching prevention function approx. 2 seconds

Moon Roof

○ : Parts Location

Code		See Page	Code	See Page	Code	See Page
B8	B	70	D15	72	M3	72
D14		72	M2	72		

⬭ : Junction Block and Wire Harness Connector

Code	See Page	Junction Block and Wire Harness (Connector Location)
2D 2E	28	Dash Wire and Cowl Side J/B LH (Left Kick Panel)
2K	28	Floor No 1 Wire and Cowl Side J/B LH (Left Kick Panel)
2L	28	Roof No 1 Wire and Cowl Side J/B LH (Left Kick Panel)
3E	40	Dash Wire and Cowl Side J/B RH (Right Kick Panel)
3K	40	Floor No 2 Wire and Cowl Side J/B RH (Right Kick Panel)

□ : Connector Joining Wire Harness and Wire Harness

Code	See Page	Joining Wire Harness and Wire Harness (Connector Location)
IE2	78	Dash Wire and Roof No 1 Wire (Left Kick Panel)

▽ : Ground Points

Code	See Page	Ground Points Location
IF IG	78	Set Bolt of Cowl Side J/B LH

⯃ : Splice Points

Code	See Page	Wire Harness with Splice Points	Code	See Page	Wire Harness with Splice Points
B7	88	Roof Wire			

Door Lock Control

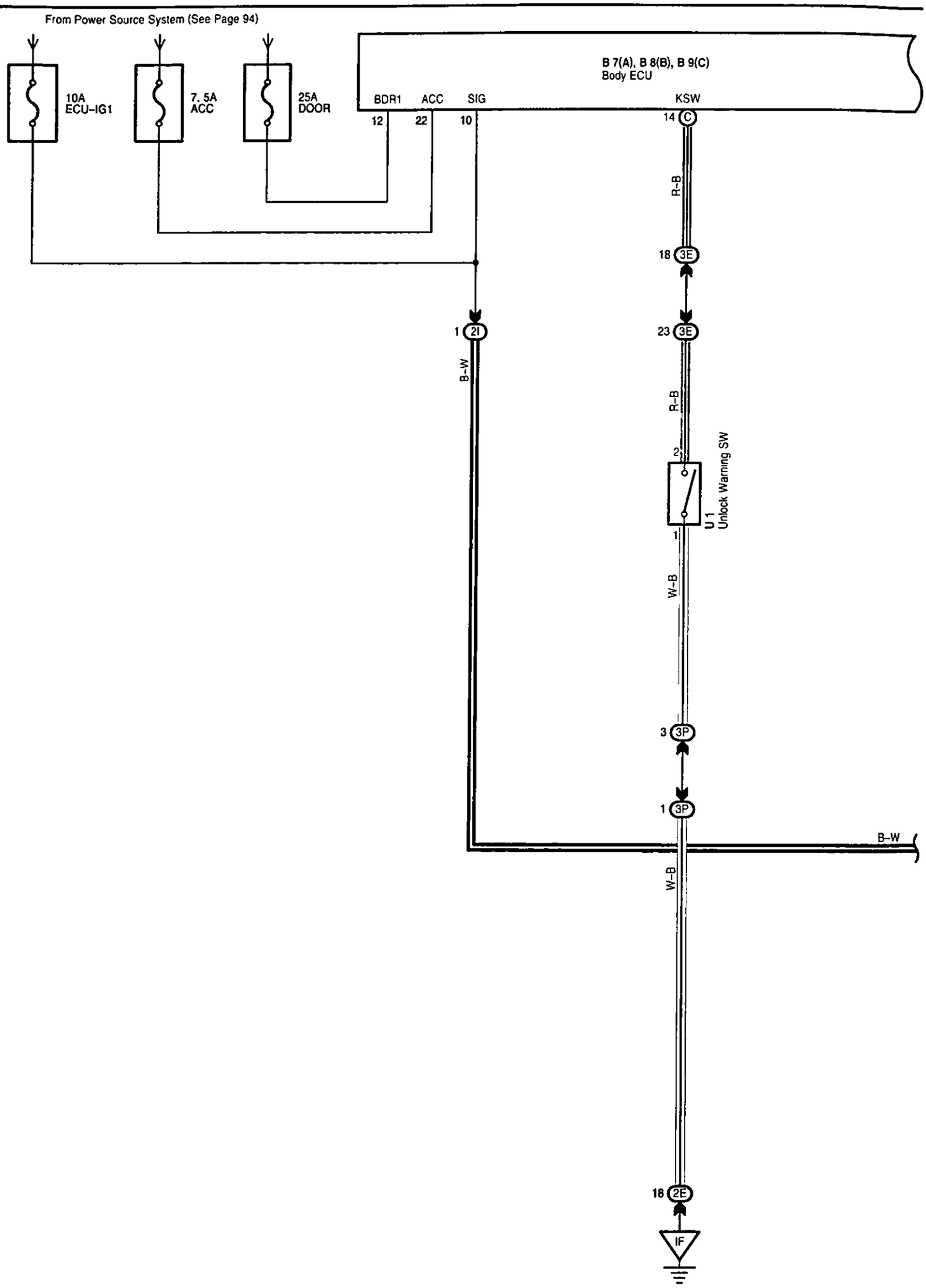

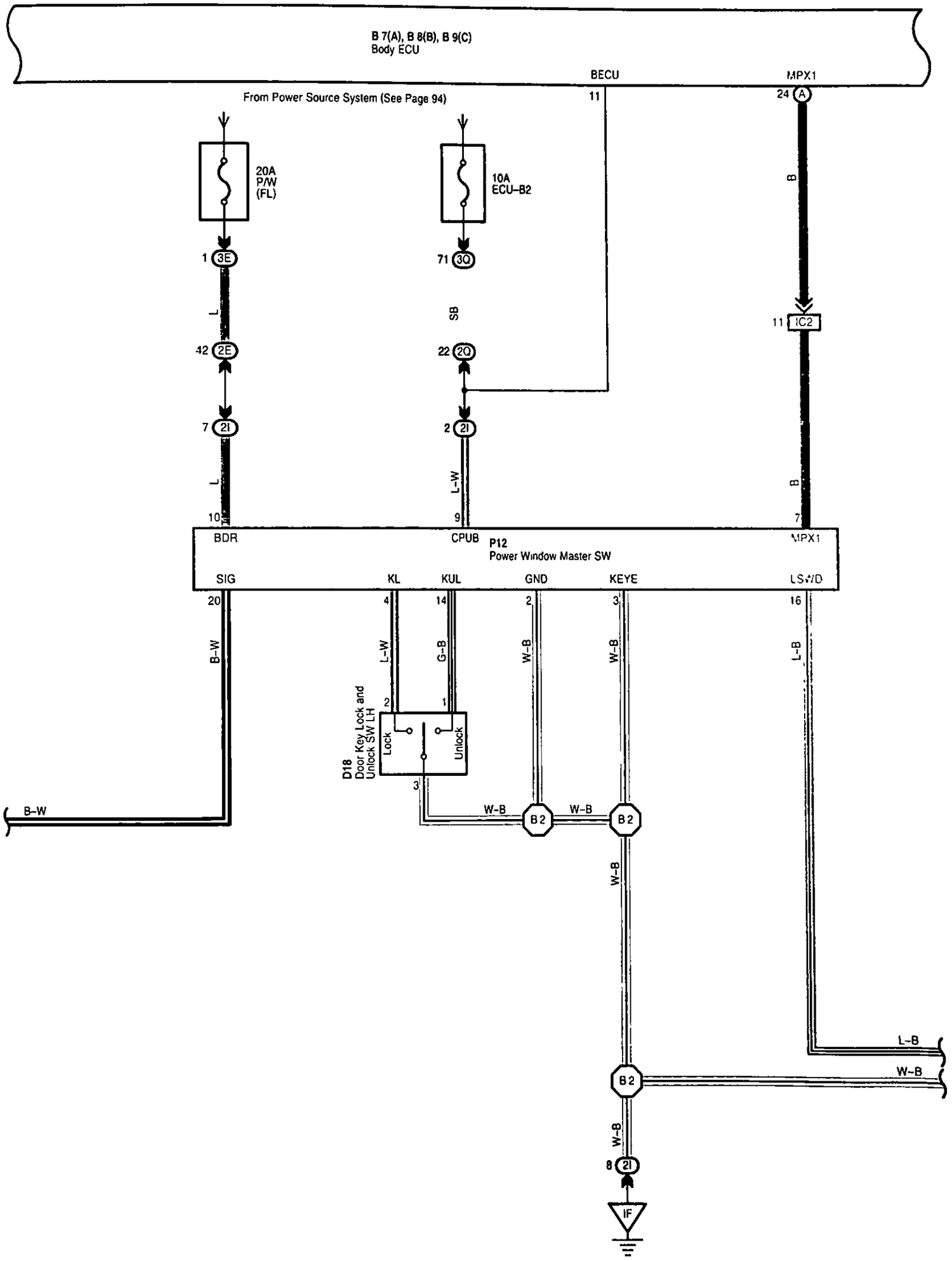
B 7(A), B 8(B), B 9(C)
Body ECU
BECU
MPX1
From Power Source System (See Page 94)
11
24 A
20A
P/W
(FL)
10A
ECU-B2
1 3E
71 3Q
L
SB
B
11 IC2
42 2E
22 2Q
7 2I
2 2I
L
L-W
B
10
9
7
BDR
CPUB
P12
Power Window Master SW
MPX1
SIG
KL
KUL
GND
KEYE
LSWD
20
4
14
2
3
16
B-W
L-W
G-B
W-B
W-B
L-B
2
1
D18
Door Key Lock and
Unlock SW LH
Lock
Unlock
3
B-W
W-B
B2
W-B
B2
W-B
L-B
B2
W-B
W-B
8 2I
IF

Door Lock Control

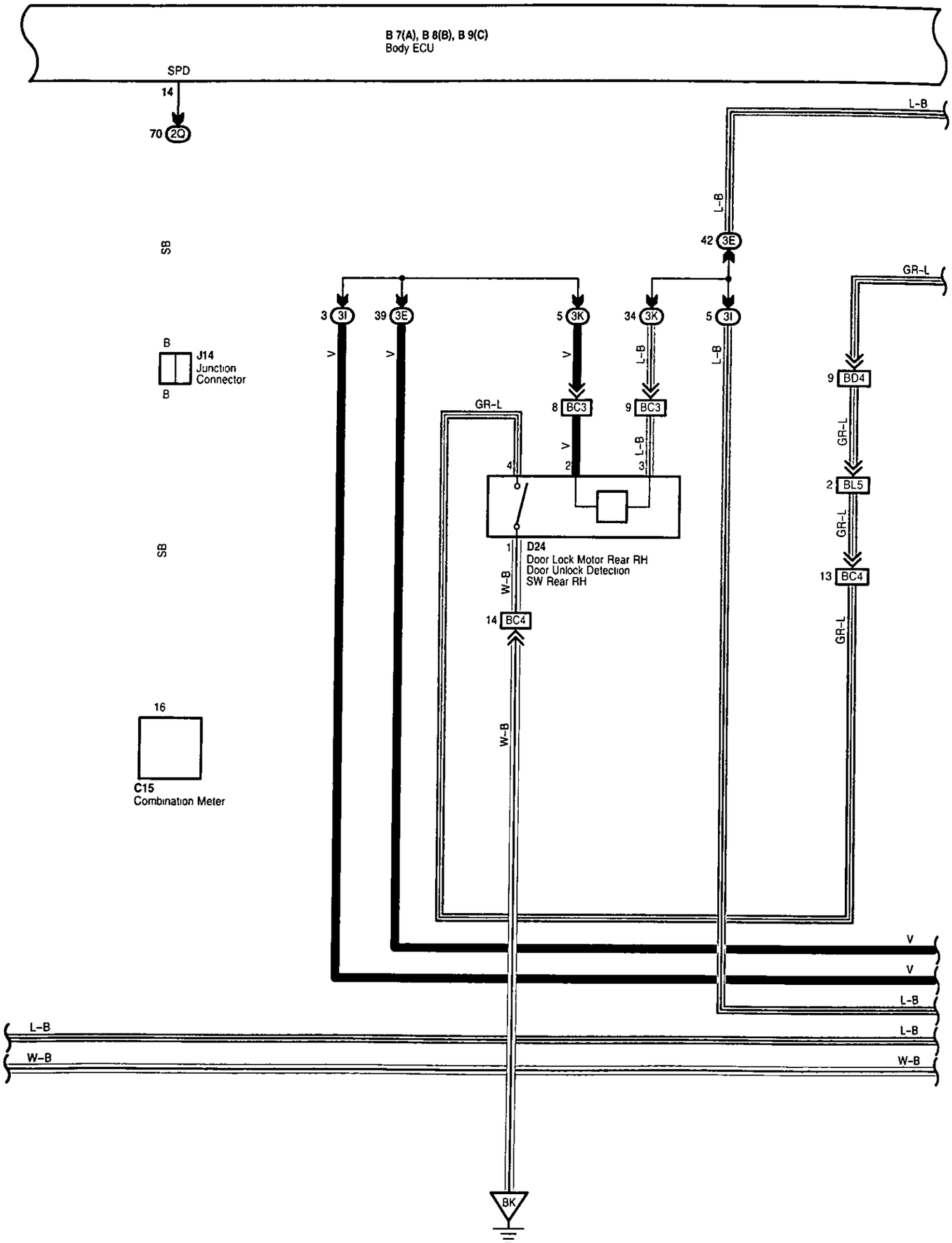

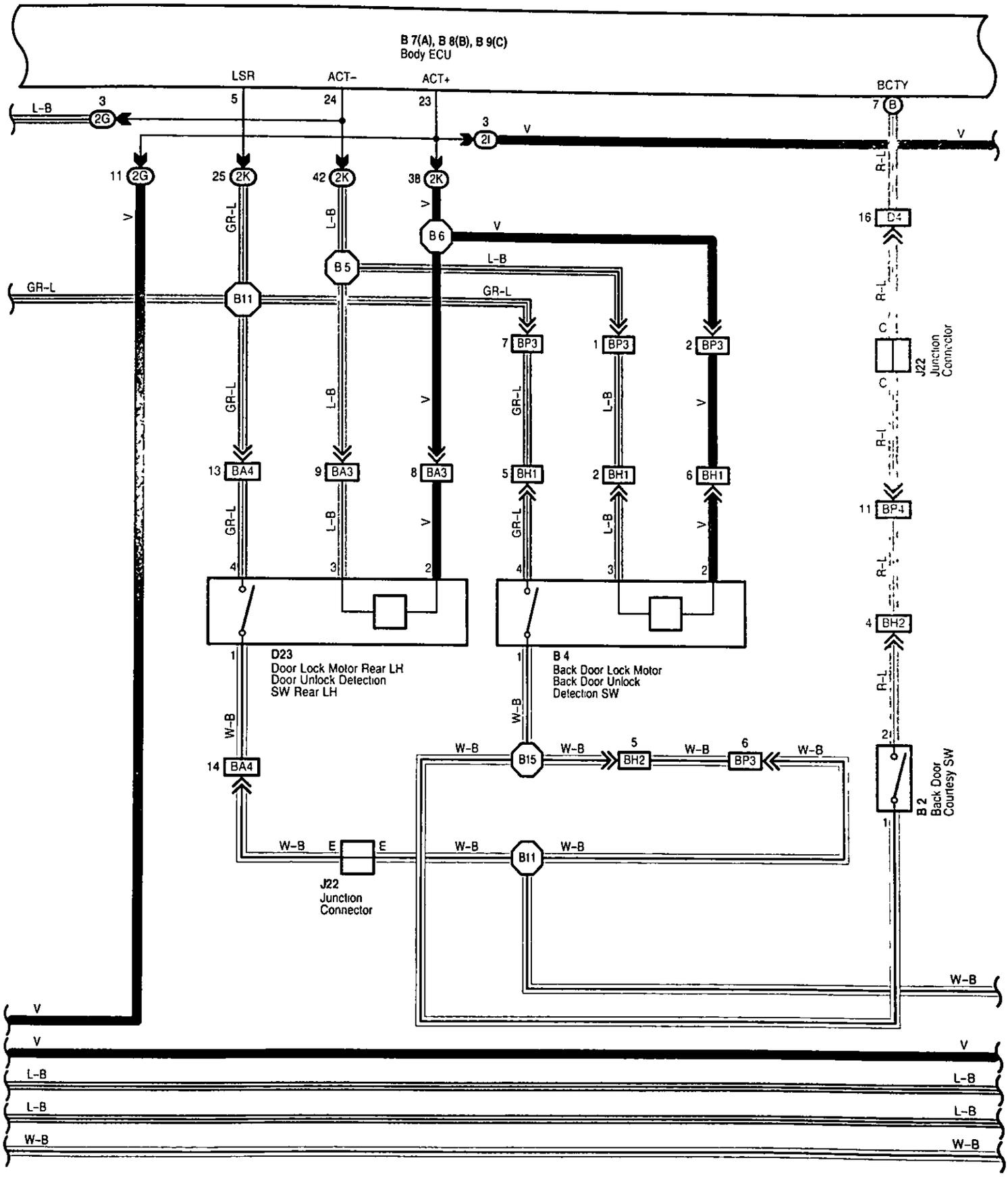
B 7(A), B 8(B), B 9(C)
Body ECU
LSR
ACT-
ACT+
BCTY
L-B
3
2G
5
24
23
7
B
3
2I
V
11
2G
25
2K
42
2K
38
2K
16
D4
B6
B5
B11
GR-L
L-B
R-L
C
J22
Junction
Connector
7
BP3
1
BP3
2
BP3
13
BA4
9
BA3
8
BA3
5
BH1
2
BH1
6
BH1
11
BP4
4
BH2
D23
Door Lock Motor Rear LH
Door Unlock Detection
SW Rear LH
B 4
Back Door Lock Motor
Back Door Unlock
Detection SW
W-B
14
BA4
B15
5
6
BP3
2I
B 2
Back Door
Courtesy SW
E
J22
Junction
Connector
W-B

Door Lock Control

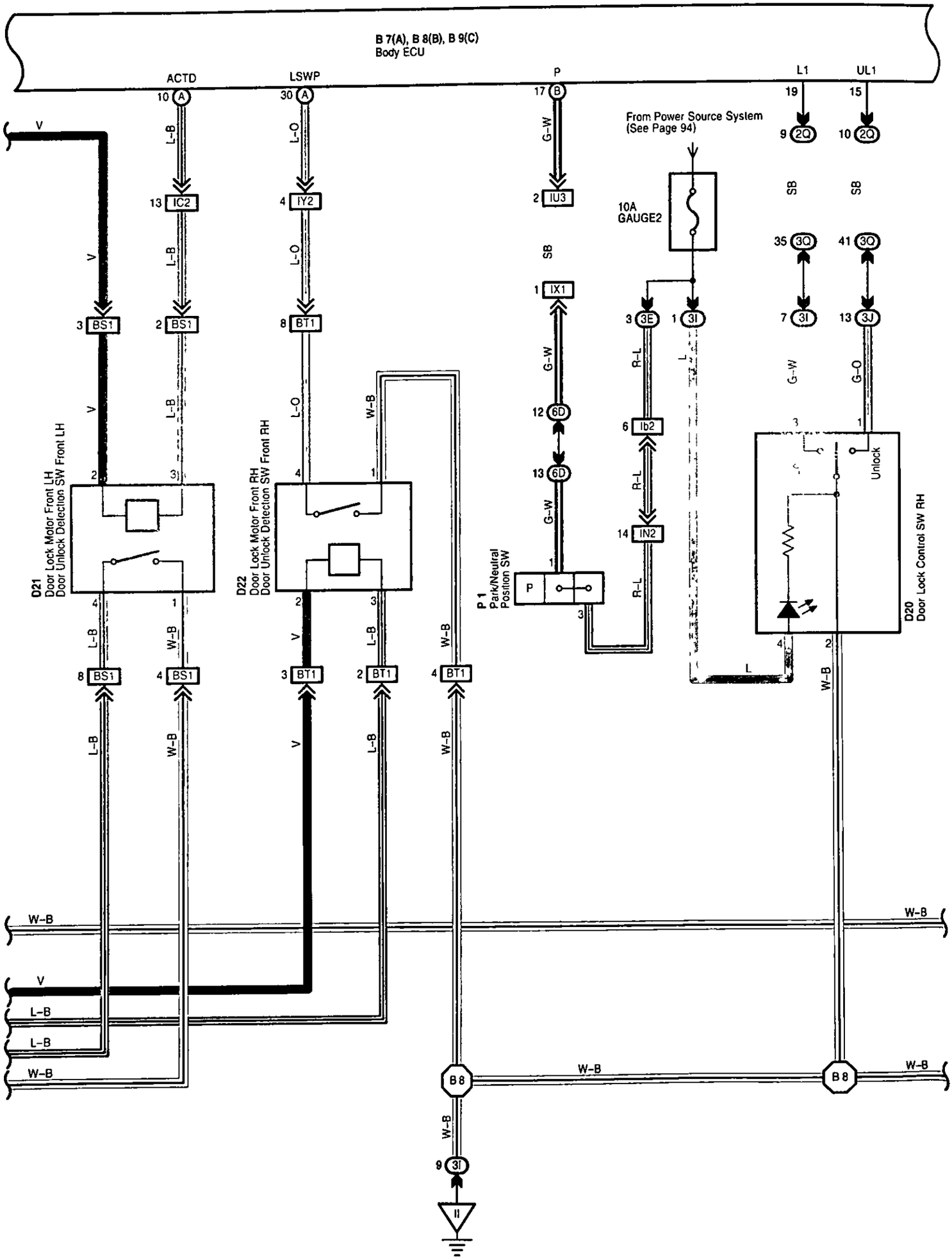

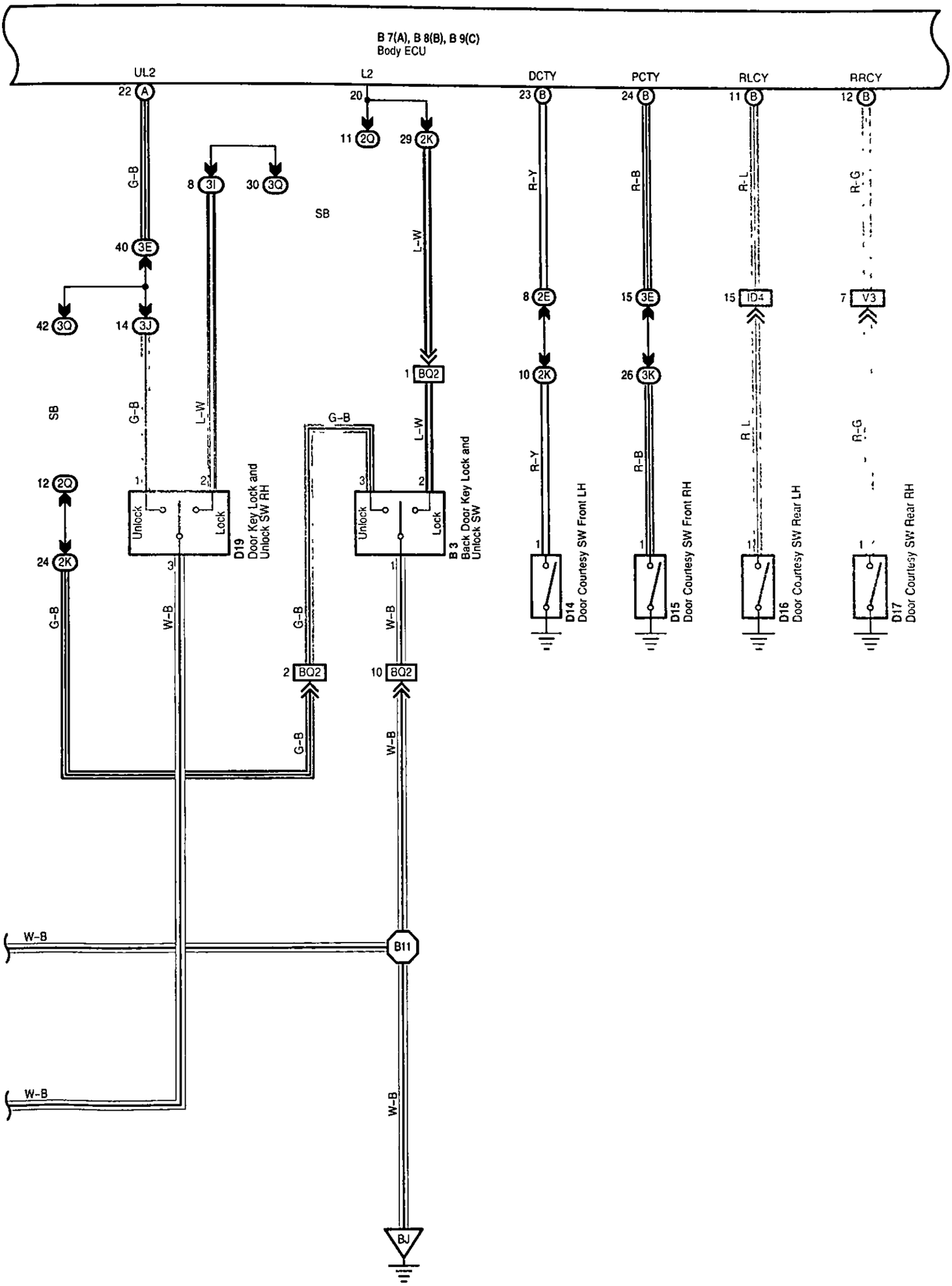
B 7(A), B 8(B), B 9(C)
Body ECU
UL2
L2
DCTY
PCTY
RLCY
RRCY
22 A
20
23 B
24 B
11 B
12 B
11 2Q
29 2K
8 3I
30 3Q
40 3E
42 3Q
14 3J
8 2E
15 3E
15 1D4
7 V3
1 BQ2
10 2K
26 3K
12 2Q
24 2K
G-B
L-W
R-Y
R-B
R-L
R-G
SB
W-B
Unlock
Lock
D19
Door Key Lock and Unlock SW RH
B 3
Back Door Key Lock and Unlock SW
D14
Door Courtesy SW Front LH
D15
Door Courtesy SW Front RH
D16
Door Courtesy SW Rear LH
D17
Door Courtesy SW Rear RH
2 BQ2
10 BQ2
B11
BJ

Door Lock Control

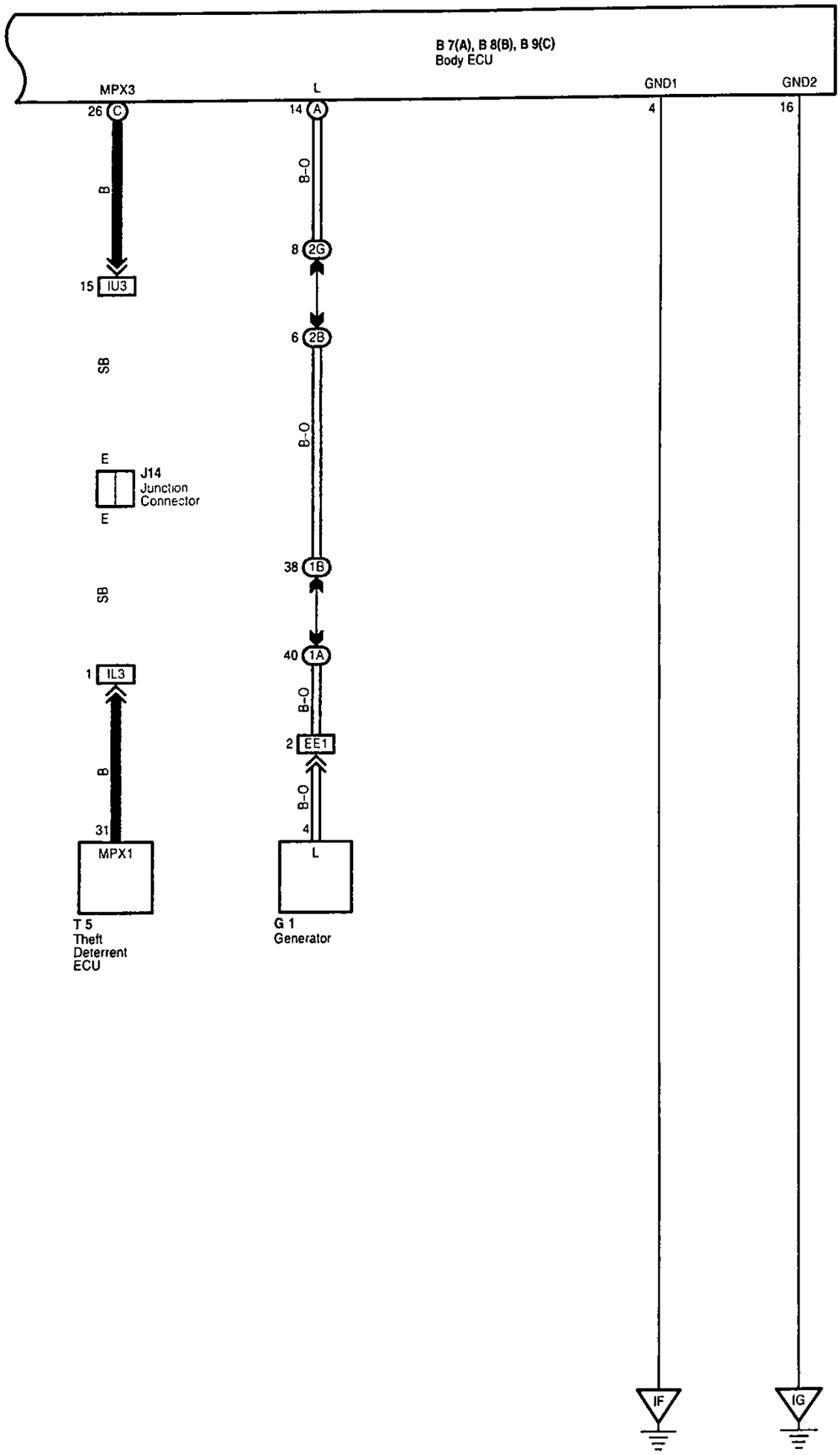

System Outline

The door lock control system is controlled by the body ECU.
This system has following features However, the adopted function differs depending on the establishment.

1. Manual Lock and Unlock Operation

Pressing the power door lock switch on the driver or front passenger door to the lock side will lock all the doors and pressing it to the unlock side will unlock all the doors.

2. Key-Linked Lock and Unlock Function

This function, which is linked with the key cylinder, can lock or unlock all the doors when a lock or unlock operation is effected.

3. Manual Unlock Prohibition Function

Performing the door lock operation with a transmitter or an ignition key will prohibit the unlock operation by the door lock control switch

4. 2-Step Unlock Function

This function is provided to unlock the driver's door by turning the key cylinder first and unlock passenger's door by turning it the second time.

5. Key Confine Prevention Function

When the key is inserted in the ignition key cylinder and if you perform the door lock operation, all the doors will be unlocked

6. Shift-Linked Automatic Door Lock

When the conditions listed below are met consecutively, this function causes all the doors to be automatically locked.
* The ignition switch is turned from the OFF or ACC position to the ON position.
* All doors are closed
* The shift lever is moved out of P position.
* Either one of the doors is unlocked.

7. Theft Deterrent System-Linked Door Lock Function

When the body ECU receives the door lock signal from the theft deterrent system, "all doors lock" operation will be performed in spite of the current door lock condition.

○ : **Parts Location**

Code	See Page	Code	See Page	Code	See Page
B2	72	D16	72	G1	68
B3	72	D17	72	J14	71
B4	72	D18	72	J22	72
B7 A	70	D19	72	P1	69
B8 B	70	D20	72	P12	73
B9 C	70	D21	72	T5	71
C15	70	D22	72	U1	71
D14	72	D23	72		
D15	72	D24	72		

Door Lock Control

: Junction Block and Wire Harness Connector

Code	See Page	Junction Block and Wire Harness (Connector Location)
1A	24	Engine Room Main Wire and Engine Room J/B (Engine Compartment Left)
1B	24	Engine Room No.2 Wire and Engine Room J/B (Engine Compartment Left)
2B	28	Engine Room No.2 Wire and Cowl Side J/B LH (Left Kick Panel)
2E	28	Dash Wire and Cowl Side J/B LH (Left Kick Panel)
2G		
2I	28	Front Door LH Wire and Cowl Side J/B LH (Left Kick Panel)
2K	28	Floor No 1 Wire and Cowl Side J/B LH (Left Kick Panel)
2Q	30	Instrument Panel Integration Wire and Cowl Side J/B LH (Left Kick Panel)
3E	40	Dash Wire and Cowl Side J/B RH (Right Kick Panel)
3I	40	Front Door RH Wire and Cowl Side J/B RH (Right Kick Panel)
3J		
3K	40	Floor No 2 Wire and Cowl Side J/B RH (Right Kick Panel)
3P	43	Dash Wire and Cowl Side J/B RH (Right Kick Panel)
3Q	42	Instrument Panel Integration Wire and Cowl Side J/B RH (Right Kick Panel)
6D	60	Engine Wire and J/B No 6 (Behind the Grove Box)

: Connector Joining Wire Harness and Wire Harness

Code	See Page	Joining Wire Harness and Wire Harness (Connector Location)
EE1	76	Engine Room Main Wire and Alternator Wire (Near the Battery)
IC2	78	Front Door LH Wire and Dash Wire (Left Kick Panel)
ID4	78	Dash Wire and Floor No.1 Wire (Left Kick Panel)
IL3	80	Instrument Panel Integration Wire and Computer Wire (Instrument Panel Center)
IN2	80	Engine Wire and Dash Wire (Behind the Glove Box)
IU3	82	Instrument Panel Integration Wire and Dash Wire (Behind the Glove Box)
IV3	82	Dash Wire and Floor No 2 Wire (Right Kick Panel)
IX1	82	Instrument Panel Integration Wire and Engine Wire (Behind the Glove Box)
IY2	82	Front Door RH Wire and Dash Wire (Right Kick Panel)
Ib2	84	Dash Wire and Dash Wire (Behind the Combination Meter)
BA3	86	Rear Door LH Wire and Floor No.1 Wire (Left Side of Center Pillar)
BA4		
BC3	86	Rear Door RH Wire and Floor No 2 Wire (Right Side of Center Pillar)
BC4		
BD4	86	Floor No 3 Wire and Floor No.1 Wire (Left Rear Side Quarter Panel)
BH1	86	Pillar No 1 Wire and Back Door Upper Wire (Left Side of Back Door)
BH2		
BL5	88	Floor No.2 Wire and Floor No.3 Wire (Right Side of Rear Floor Crossmember)
BP3	88	Pillar No 1 Wire and Floor No.1 Wire (Left Rear Side Quarter Panel)
BP4		
BQ2	88	Back Door Lower Wire and Floor No.1 Wire (Left Rear Side Quarter Panel)
BS1	88	Door Lock LH Sub Wire and Front Door LH Wire (Front Door LH)
BT1	88	Door Lock RH Sub Wire and Front Door RH Wire (Front Door RH)

: Ground Points

Code	See Page	Ground Points Location
IF	78	Set Bolt of Cowl Side J/B LH
IG		
II	78	Set Bolt of Cowl Side J/B RH
BJ	86	Under the Driver's Seat
BK	86	Front Side Under the Front Passenger's Seat

: **Splice Points**

Code	See Page	Wire Harness with Splice Points	Code	See Page	Wire Harness with Splice Points
B2	88	Front Door LH Wire	B8	88	Front Door RH Wire
B5	88	Floor No 1 Wire	B11	88	Floor No 1 Wire
B6			B15	88	Back Door Upper Wire

Wireless Door Lock Control

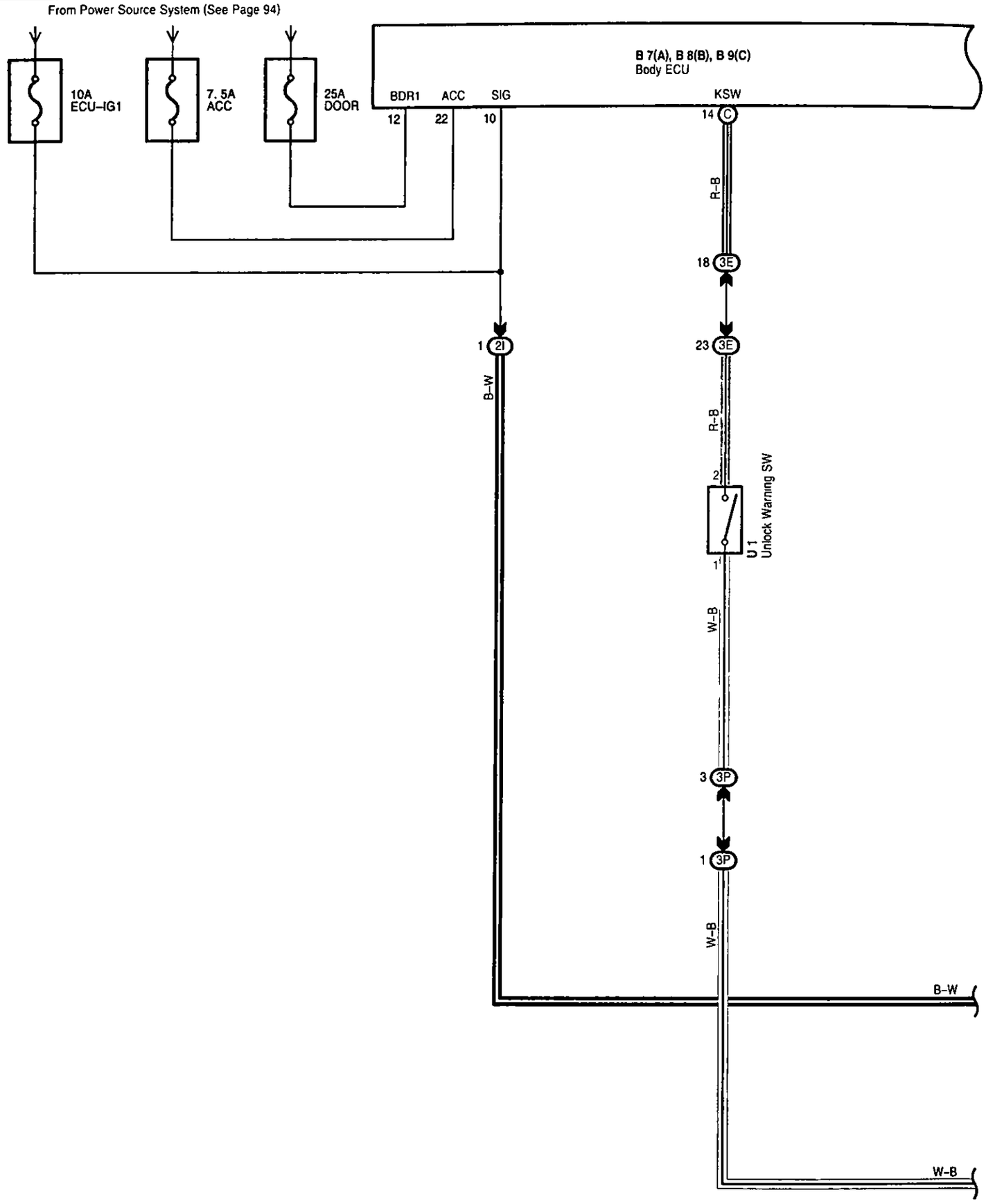

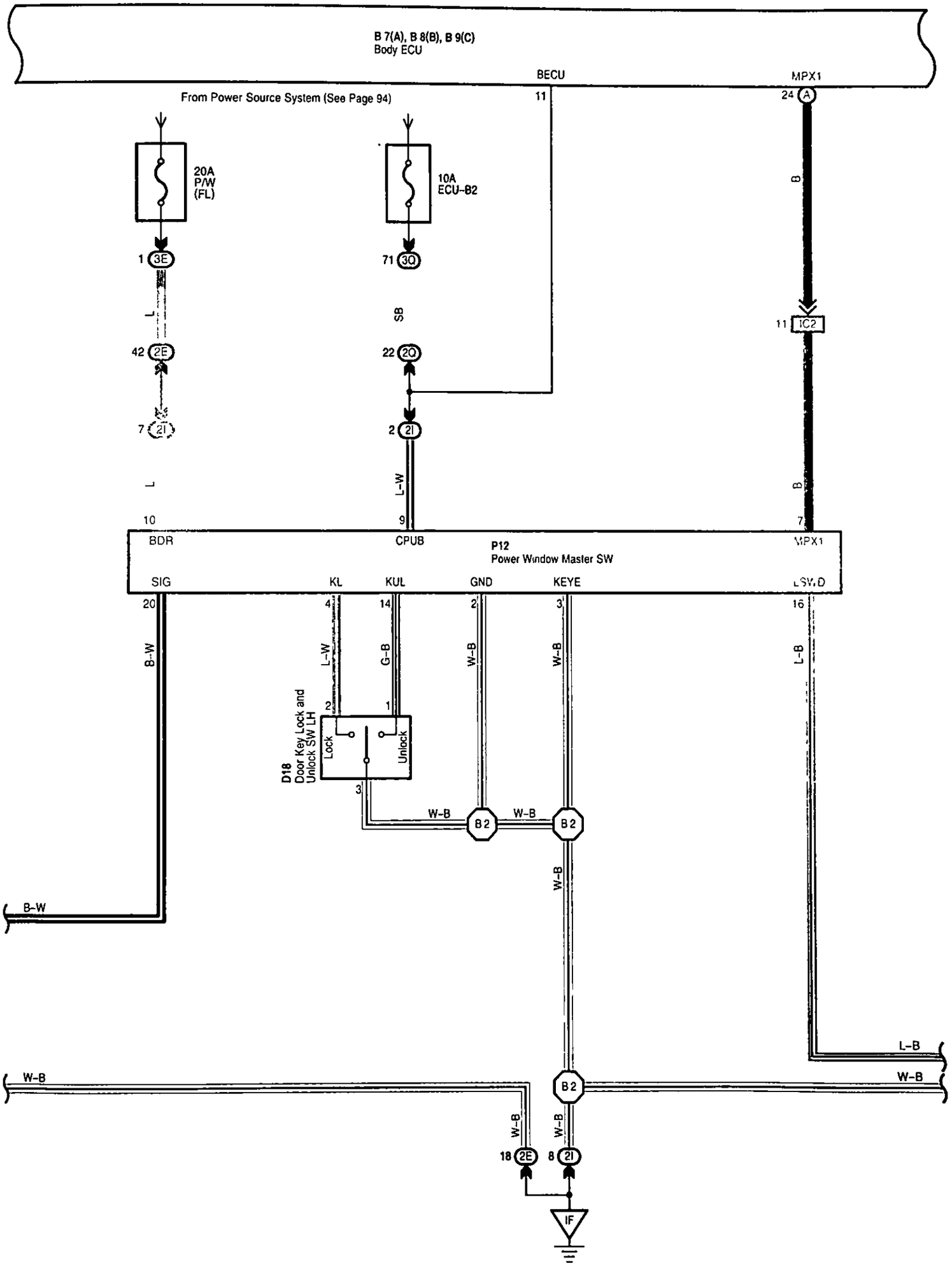
B 7(A), B 8(B), B 9(C)
Body ECU
BECU
MPX1
From Power Source System (See Page 94)
11
24 A
20A
P/W
(FL)
10A
ECU-B2
1 3E
71 3Q
L
SB
B
42 2E
22 2Q
11 IC2
7 2I
2 2I
L
L-W
B
10
9
7
BDR
CPUB
MPX1
P12
Power Window Master SW
SIG
KL
KUL
GND
KEYE
LSW,D
20
4
14
2
3
16
B-W
L-W
G-B
W-B
W-B
L-B
2
1
D18
Door Key Lock and
Unlock SW LH
Lock
Unlock
3
W-B
W-B
B2
B2
W-B
B-W
L-B
W-B
W-B
B2
W-B
W-B
18 2E
8 2I
IF

Wireless Door Lock Control

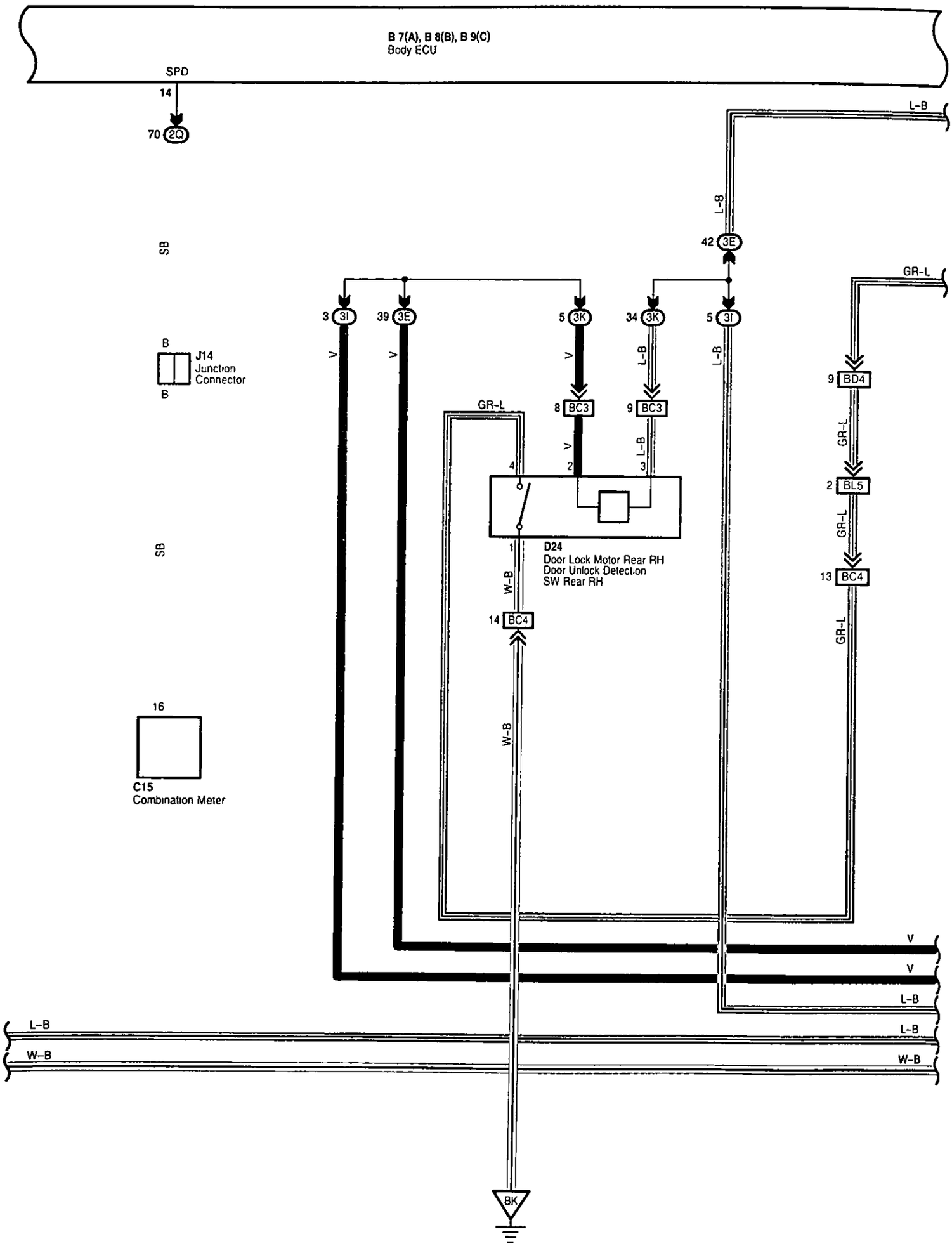

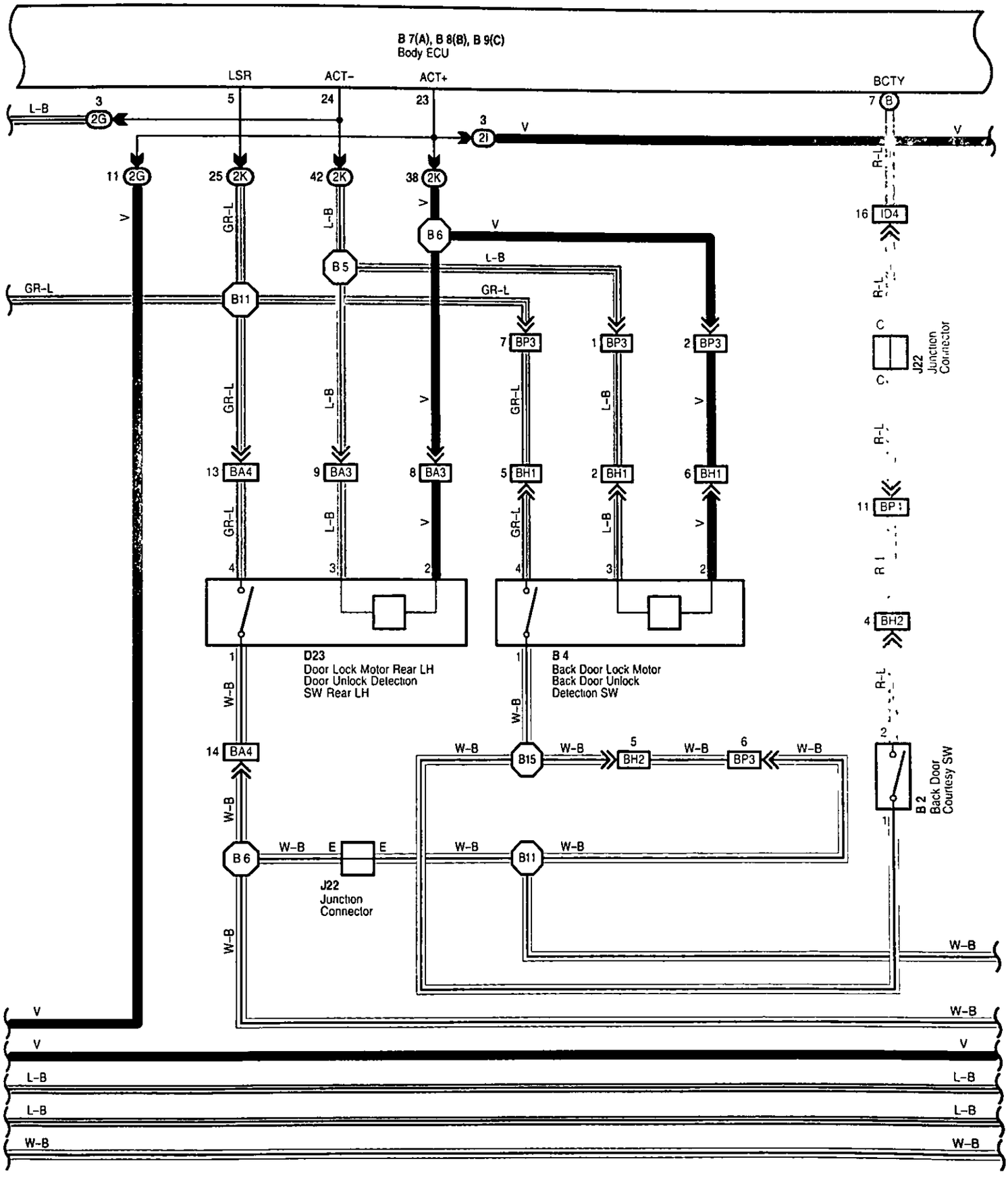
B 7(A), B 8(B), B 9(C)
Body ECU
LSR
ACT-
ACT+
BCTY
L-B
3
2G
5
24
23
3
2I
7
B
V
11 2G
25 2K
42 2K
38 2K
16 ID4
B6
B5
B11
GR-L
L-B
R-L
7 BP3
1 BP3
2 BP3
C
C
J22
Junction
Connector
13 BA4
9 BA3
8 BA3
5 BH1
2 BH1
6 BH1
11 BP1
4 BH2
D23
Door Lock Motor Rear LH
Door Unlock Detection
SW Rear LH
B 4
Back Door Lock Motor
Back Door Unlock
Detection SW
W-B
14 BA4
B15
BH2
BP3
B 2
Back Door
Courtesy SW
E
J22
Junction
Connector
B11

Wireless Door Lock Control

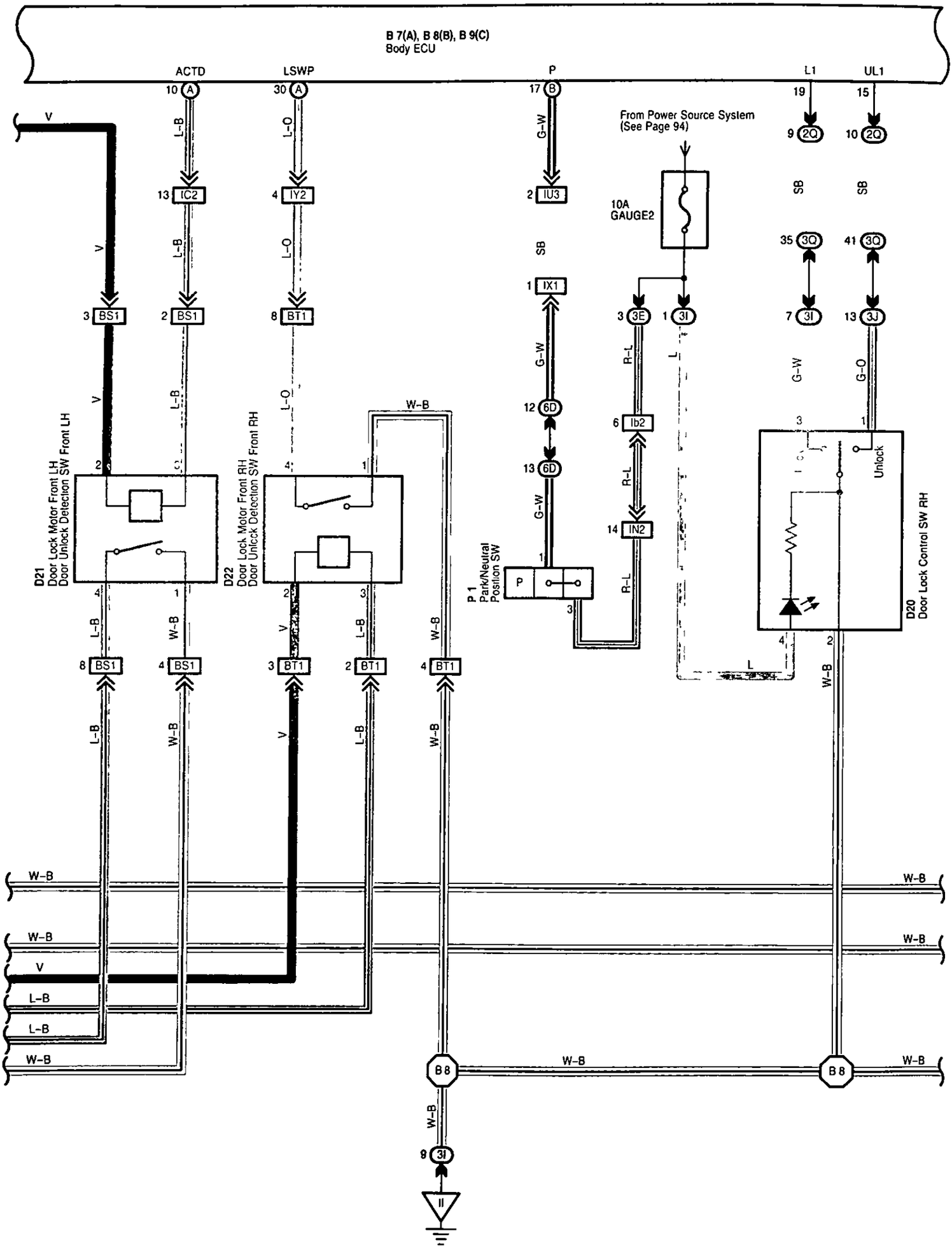

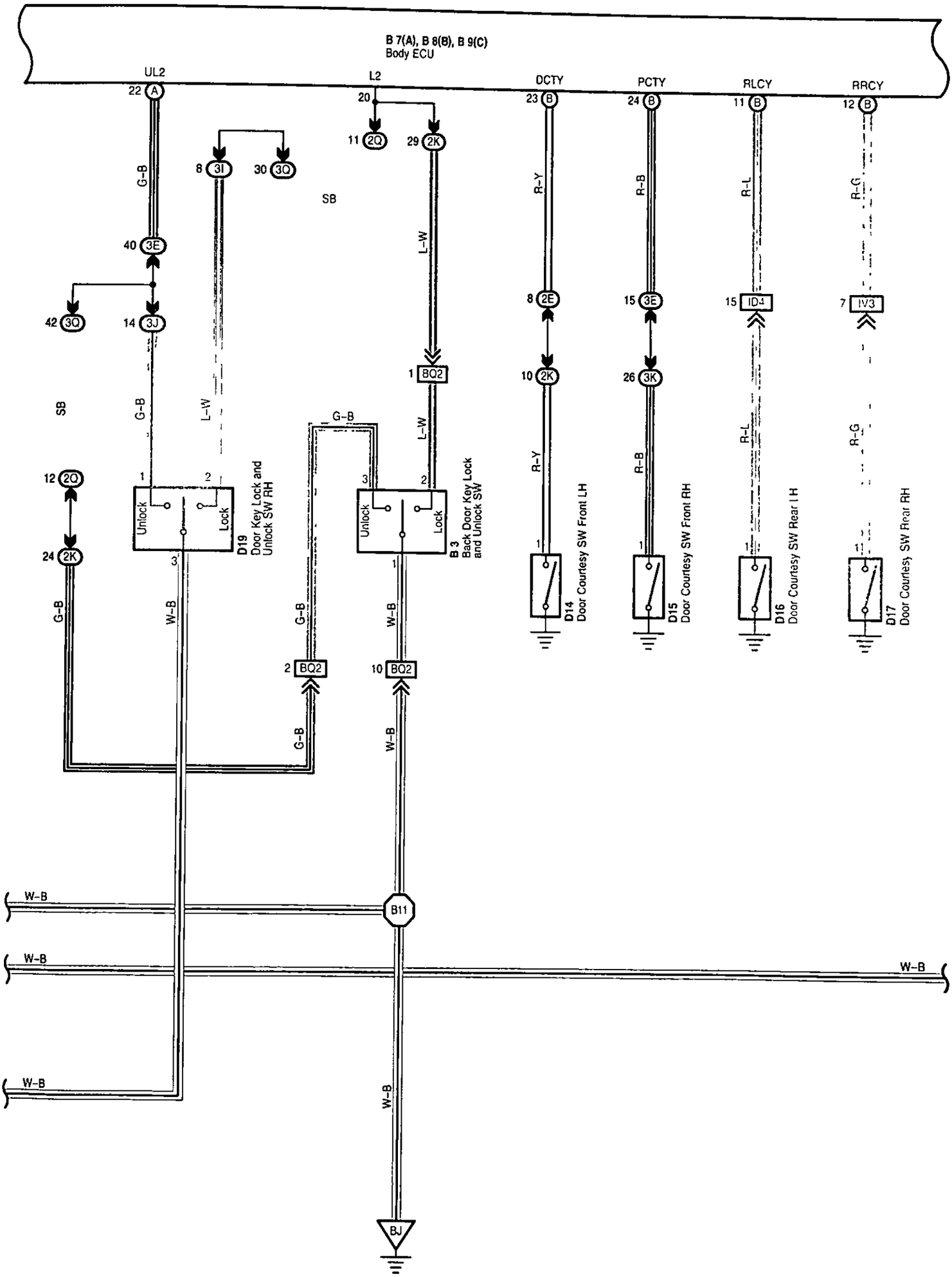
B 7(A), B 8(B), B 9(C)
Body ECU
UL2
L2
DCTY
PCTY
RLCY
RRCY
22 A
20
23 B
24 B
11 B
12 B
11 2Q
29 2K
8 3I
30 3Q
40 3E
42 3Q
14 3J
8 2E
15 3E
15 ID4
7 IV3
1 BQ2
10 2K
26 3K
12 2Q
24 2K
G-B
SB
L-W
R-Y
R-B
R-L
R-G
W-B
Unlock
Lock
D19
Door Key Lock and Unlock SW RH
B 3
Back Door Key Lock and Unlock SW
D14
Door Courtesy SW Front LH
D15
Door Courtesy SW Front RH
D16
Door Courtesy SW Rear LH
D17
Door Courtesy SW Rear RH
2 BQ2
10 BQ2
B11
BJ

Wireless Door Lock Control

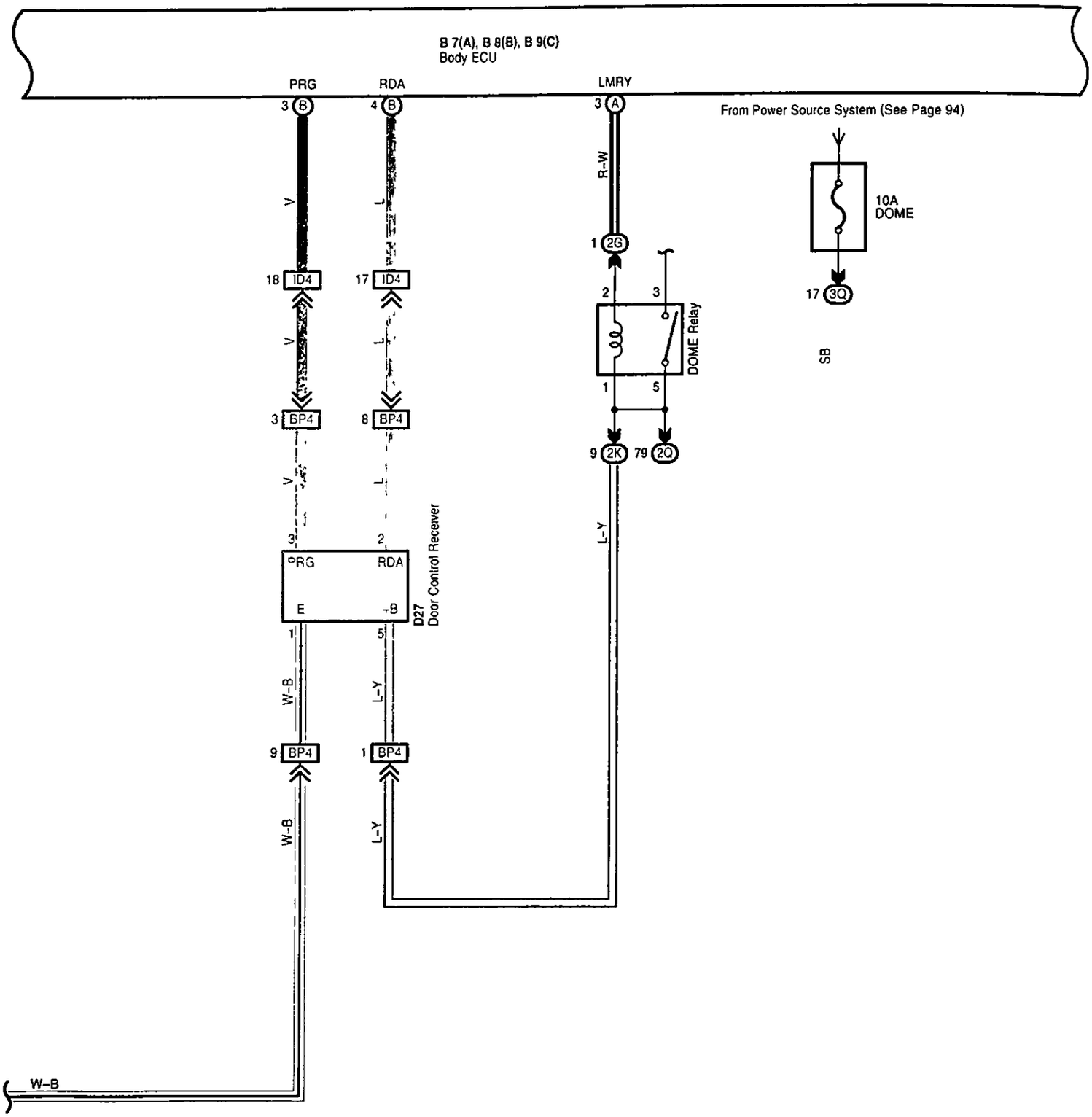

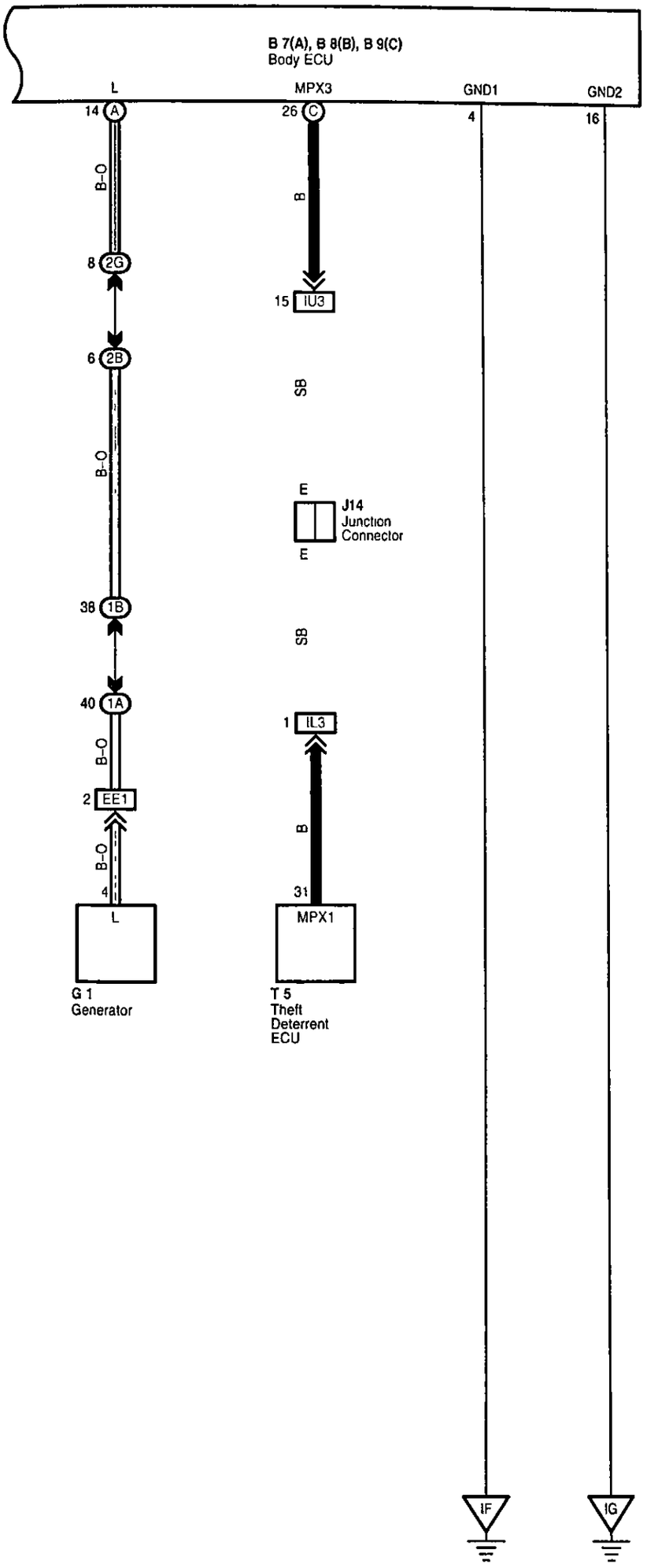
B 7(A), B 8(B), B 9(C)
Body ECU
L
MPX3
GND1
GND2
14 A
26 C
4
16
B-O
B
8 2G
15 IU3
6 2B
SB
B-O
E
J14
Junction
Connector
E
38 1B
SB
40 1A
1 IL3
B-O
2 EE1
B
B-O
4
31
L
MPX1
G 1
Generator
T 5
Theft
Deterrent
ECU
IF
IG

Wireless Door Lock Control

System Outline

In this system, the door control receiver receivers weak radio wave transmitted from the transmitter built-into the ignition key, and outputs a signal to the body ECU. Accordingly, all the doors are can be locked and unlocked by remote control.

1. Normal Operation

- Lock operation
  When the lock SW on the transmitter is pressed, all the doors are locked.
  Unlock operation
  When the unlock SW on the transmitter is pressed once, only the driver door is unlocked. When the unlock SW is pressed again within 3 seconds, all the doors are unlocked.

2. Auto Lock Function

When the door is not actually opened within 30 seconds after the door has been unlocked by the unlock SW on the transmitter, all the doors are automatically locked. If any of the following conditions are detected, the wireless door lock does not function.

- Any door is opened.
- The ignition key is inserted into the ignition SW.
- When the unlock detection SW of all the doors are locked.

3. Wireless Door Lock Stop Function

If any of the following conditions are detected, the wireless door lock does not function.
Lock operation

- When any door is open (Door courtesy SW on)
- The ignition key is inserted into the ignition SW (Unlock warning SW on)
- Ignition SW is on

Unlock operation

- Ignition SW is on

4. Visual Confirmation of Lock or Unlock

During lock operation, when the door control receiver receives a lock signal from the door unlock detection SW, the turn signal light is flashed once During unlock operation, when the door control receiver receives an unlock signal from the door unlock detection SW, the turn signal light is flashed twice.

5. Panic Mode Function

When the panic SW on the transmitter is pressed, the door control receiver receives a signal and enters the panic mode. The signal input into the theft deterrent ECU from the body ECU turns on the theft deterrent horn, and flashes the taillight and headlight. When the panic SW or the unlock SW of the transmitter is pressed during the panic mode, the panic mode is canceled, and the theft deterrent horn stops, and the taillight and headlight are turned off.

6. Repeat Function

If the lock detection signal in response to the output signal is not received after the door control receiver has output the lock signal, the lock signal is output again.

Service Hints

D27 Door Control Receiver

5-Ground : Always approx. 12 volts
1-Ground : Always continuity

D21, D22, D23, D24 Door Unlock Detection SW Front LH, RH, Rear LH, RH

1-Ground : Always continuity

B4 Back Door Unlock Detection SW

1-Ground : Always continuity

○ : Parts Location

Code	See Page	Code	See Page	Code	See Page
B2	72	D16	72	D27	72
B3	72	D17	72	G1	68
B4	72	D18	72	J14	71
B7 A	70	D19	72	J22	72
B8 B	70	D20	72	P1	69
B9 C	70	D21	72	P12	73
C15	70	D22	72	T5	71
D14	72	D23	72	U1	71
D15	72	D24	72		

▭ : Junction Block and Wire Harness Connector

Code	See Page	Junction Block and Wire Harness (Connector Location)
1A	24	Engine Room Main Wire and Engine Room J/B (Engine Compartment Left)
1B	24	Engine Room No 2 Wire and Engine Room J/B (Engine Compartment Left)
2B	28	Engine Room No 2 Wire and Cowl Side J/B LH (Left Kick Panel)
2E	28	Dash Wire and Cowl Side J/B LH (Left Kick Panel)
2G		
2I	28	Front Door LH Wire and Cowl Side J/B LH (Left Kick Panel)
2K	28	Floor No 1 Wire and Cowl Side J/B LH (Left Kick Panel)
2Q	30	Instrument Panel Integration Wire and Cowl Side J/B LH (Left Kick Panel)
3E	40	Dash Wire and Cowl Side J/B RH (Right Kick Panel)
3I	40	Front Door RH Wire and Cowl Side J/B RH (Right Kick Panel)
3J		
3K	40	Floor No 2 Wire and Cowl Side J/B RH (Right Kick Panel)
3P	43	Dash Wire and Cowl Side J/B RH (Right Kick Panel)
3Q	42	Instrument Panel Integration Wire and Cowl Side J/B RH (Right Kick Panel)
6D	60	Engine Wire and J/B No 6 (Behind the Grove Box)

Wireless Door Lock Control

: Connector Joining Wire Harness and Wire Harness

Code	See Page	Joining Wire Harness and Wire Harness (Connector Location)
EE1	76	Engine Room Main Wire and Alternator Wire (Near the Battery)
IC2	78	Front Door LH Wire and Dash Wire (Left Kick Panel)
ID4	78	Dash Wire and Floor No 1 Wire (Left Kick Panel)
IL3	80	Instrument Panel Integration Wire and Computer Wire (Instrument Panel Center)
IN2	80	Engine Wire and Dash Wire (Behind the Glove Box)
IU3	82	Instrument Panel Integration Wire and Dash Wire (Behind the Glove Box)
IV3	82	Dash Wire and Floor No 2 Wire (Right Kick Panel)
IX1	82	Instrument Panel Integration Wire and Engine Wire (Behind the Glove Box)
IY2	82	Front Door RH Wire and Dash Wire (Right Kick Panel)
Ib2	84	Dash Wire and Dash Wire (Behind the Combination Meter)
BA3	86	Rear Door LH Wire and Floor No 1 Wire (Left Side of Center Pillar)
BA4		
BC3	86	Rear Door RH Wire and Floor No.2 Wire (Right Side of Center Pillar)
BC4		
BD4	86	Floor No 3 Wire and Floor No 1 Wire (Left Rear Side Quarter Panel)
BH1	86	Pillar No 1 Wire and Back Door Upper Wire (Left Side of Back Door)
BH2		
BL5	88	Floor No 2 Wire and Floor No 3 Wire (Right Side of Rear Floor Crossmember)
BP3	88	Pillar No 1 Wire and Floor No 1 Wire (Left Rear Side Quarter Panel)
BP4		
BQ2	88	Back Door Lower Wire and Floor No 1 Wire (Left Rear Side Quarter Panel)
BS1	88	Door Lock LH Sub Wire and Front Door LH Wire (Front Door LH)
BT1	88	Door Lock RH Sub Wire and Front Door RH Wire (Front Door RH)

: Ground Points

Code	See Page	Ground Points Location
IF	78	Set Bolt of Cowl Side J/B LH
IG		
II	78	Set Bolt of Cowl Side J/B RH
BJ	86	Under the Driver's Seat
BK	86	Front Side Under the Front Passenger's Seat

: Splice Points

Code	See Page	Wire Harness with Splice Points	Code	See Page	Wire Harness with Splice Points
B2	88	Front Door LH Wire	B8	88	Front Door RH Wire
B5	88	Floor No.1 Wire	B11	88	Floor No.1 Wire
B6			B15	88	Back Door Upper Wire

Theft Deterrent

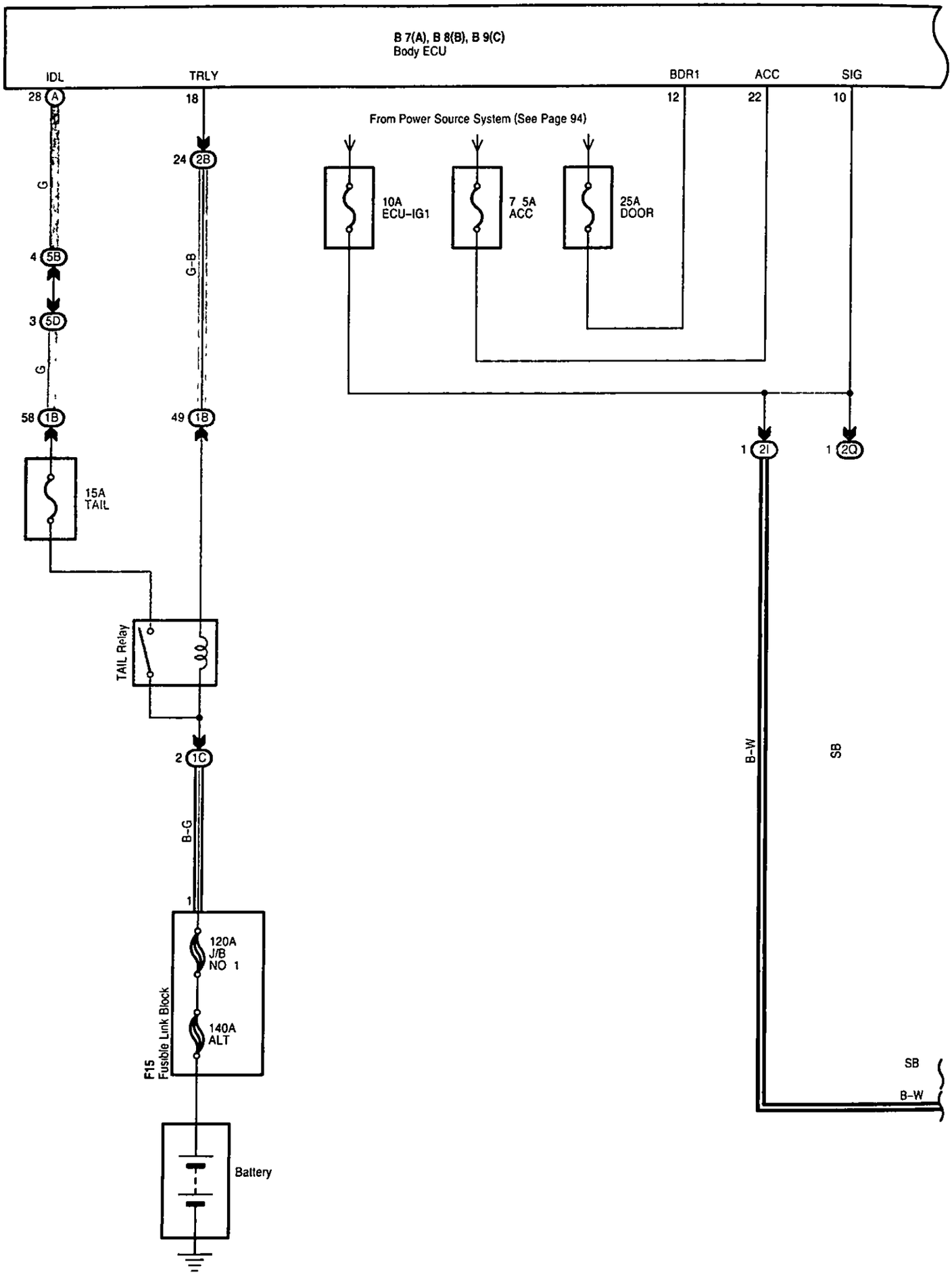

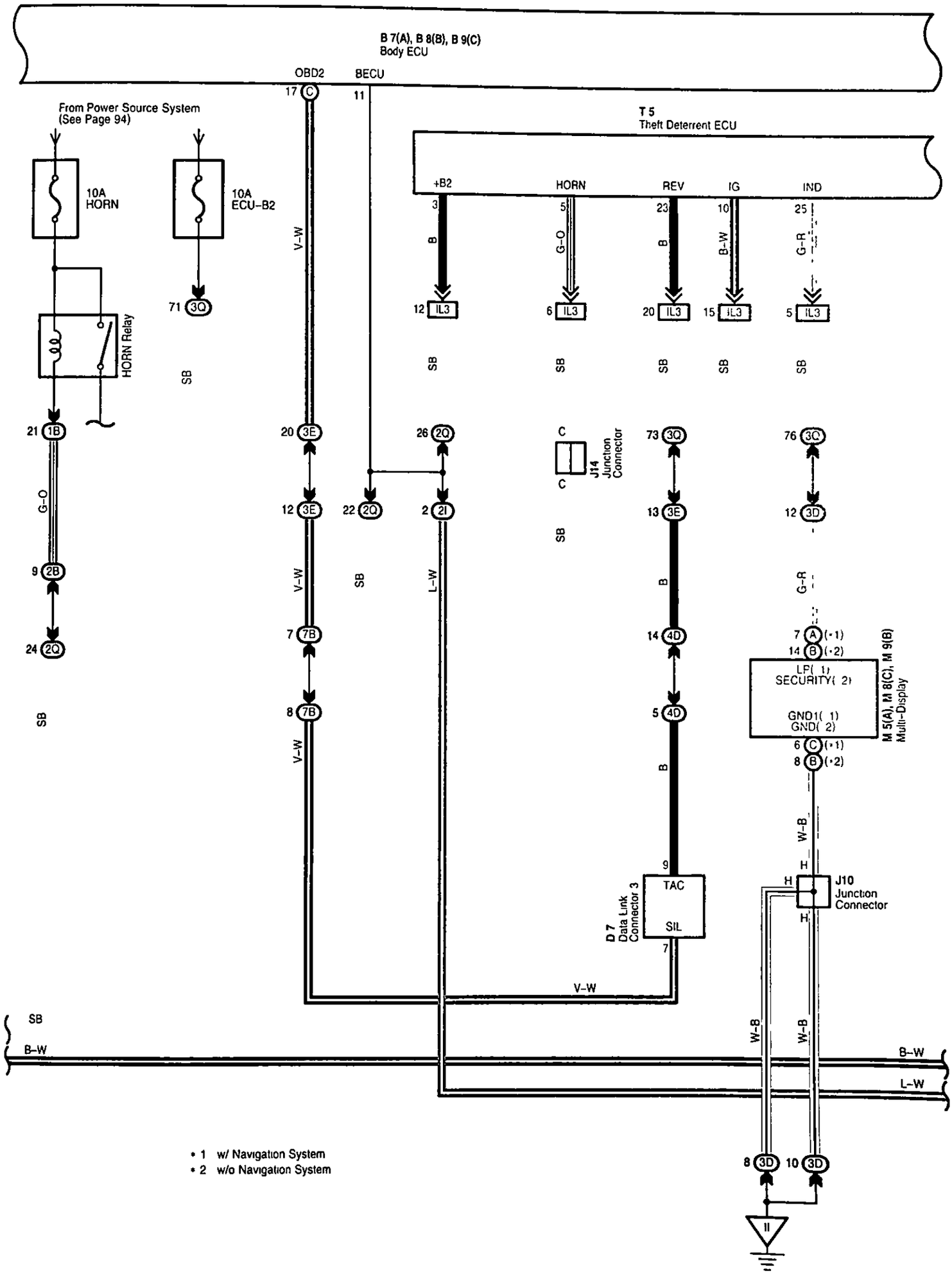
B 7(A), B 8(B), B 9(C)
Body ECU
OBD2
BECU
17 C
11
From Power Source System
(See Page 94)
T 5
Theft Deterrent ECU
+B2
HORN
REV
IG
IND
10A
HORN
10A
ECU-B2
HORN Relay
71 3Q
V-W
B
G-O
B
B-W
G-R
12 IL3
6 IL3
20 IL3
15 IL3
5 IL3
SB
21 1B
20 3E
26 2Q
C
J14
Junction
Connector
C
73 3Q
76 3Q
12 3E
22 2Q
2 2I
13 3E
12 3D
G-O
V-W
L-W
G-R
9 2B
7 7B
14 4D
7 A (*1)
14 B (*2)
LP(1)
SECURITY(2)
GND1(1)
GND(2)
M 5(A), M 8(C), M 9(B)
Multi-Display
24 2Q
8 7B
5 4D
6 C (*1)
8 B (*2)
W-B
9
H
H
J10
Junction
Connector
H
TAC
SIL
D 7
Data Link
Connector 3
7
V-W
SB
B-W
W-B
W-B
B-W
L-W
8 3D
10 3D
* 1 w/ Navigation System
* 2 w/o Navigation System

Theft Deterrent

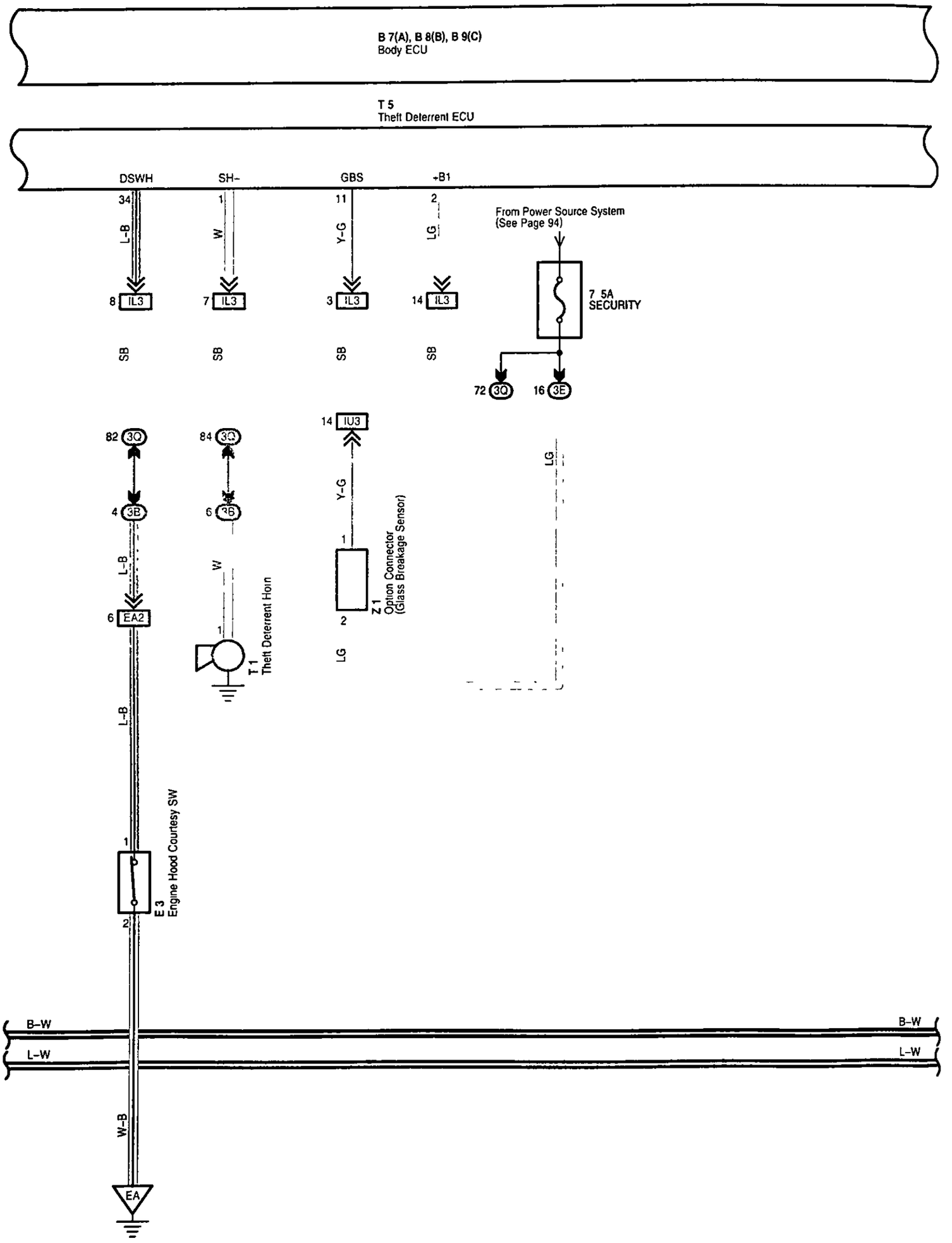

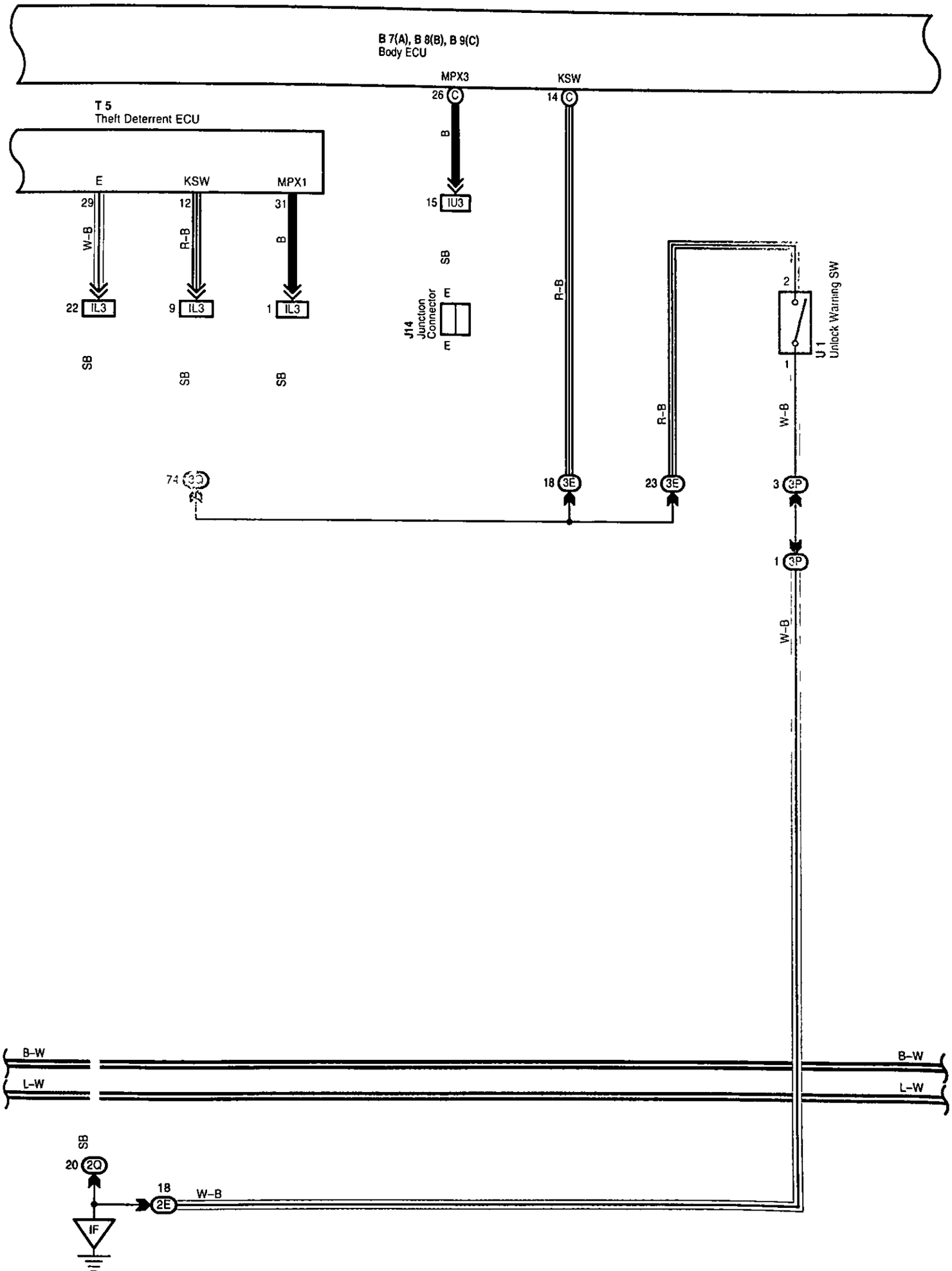
B 7(A), B 8(B), B 9(C)
Body ECU
MPX3
KSW
26 C
14 C
T 5
Theft Deterrent ECU
E
KSW
MPX1
29
12
31
W-B
R-B
B
15 IU3
SB
22 IL3
9 IL3
1 IL3
J14
Junction
Connector
E
E
R-B
2
U 1
Unlock Warning SW
1
R-B
W-B
74 3Q
18 3E
23 3E
3 3P
1 3P
W-B
B-W
L-W
B-W
L-W
SB
20 2Q
18
2E
W-B
IF

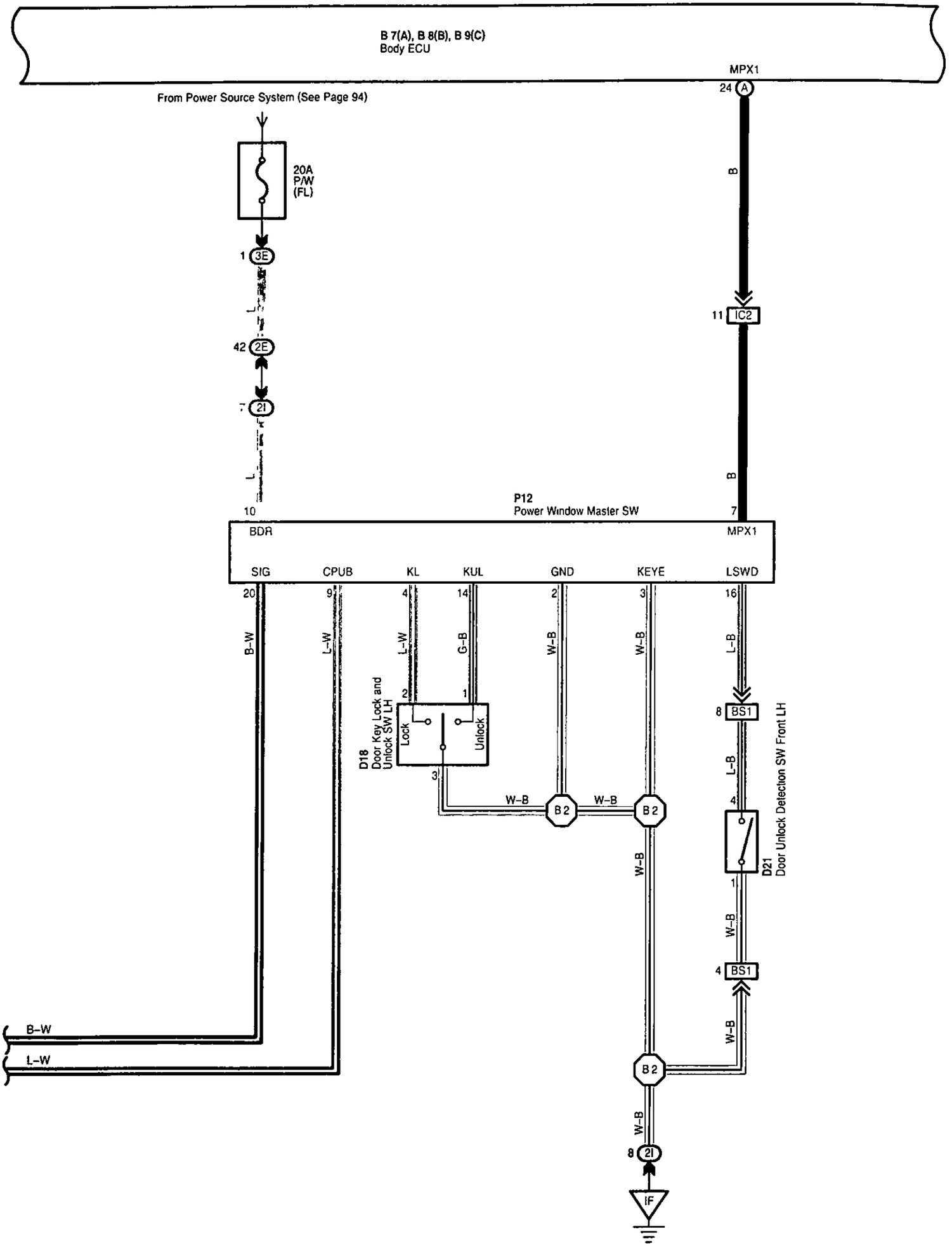
B 7(A), B 8(B), B 9(C)
Body ECU
MPX1
24 A
From Power Source System (See Page 94)
20A
P/W
(FL)
1 3E
42 2E
21
B
11 IC2
B
10
P12
Power Window Master SW
7
BDR
MPX1
SIG
CPUB
KL
KUL
GND
KEYE
LSWD
20
9
4
14
2
3
16
B-W
L-W
L-W
G-B
W-B
W-B
L-B
D18
Door Key Lock and
Unlock SW LH
Lock
Unlock
2
1
3
W-B
B2
W-B
B2
8 BS1
L-B
4
D21
Door Unlock Detection SW Front LH
1
W-B
4 BS1
W-B
B-W
L-W
B2
W-B
8 21
IF

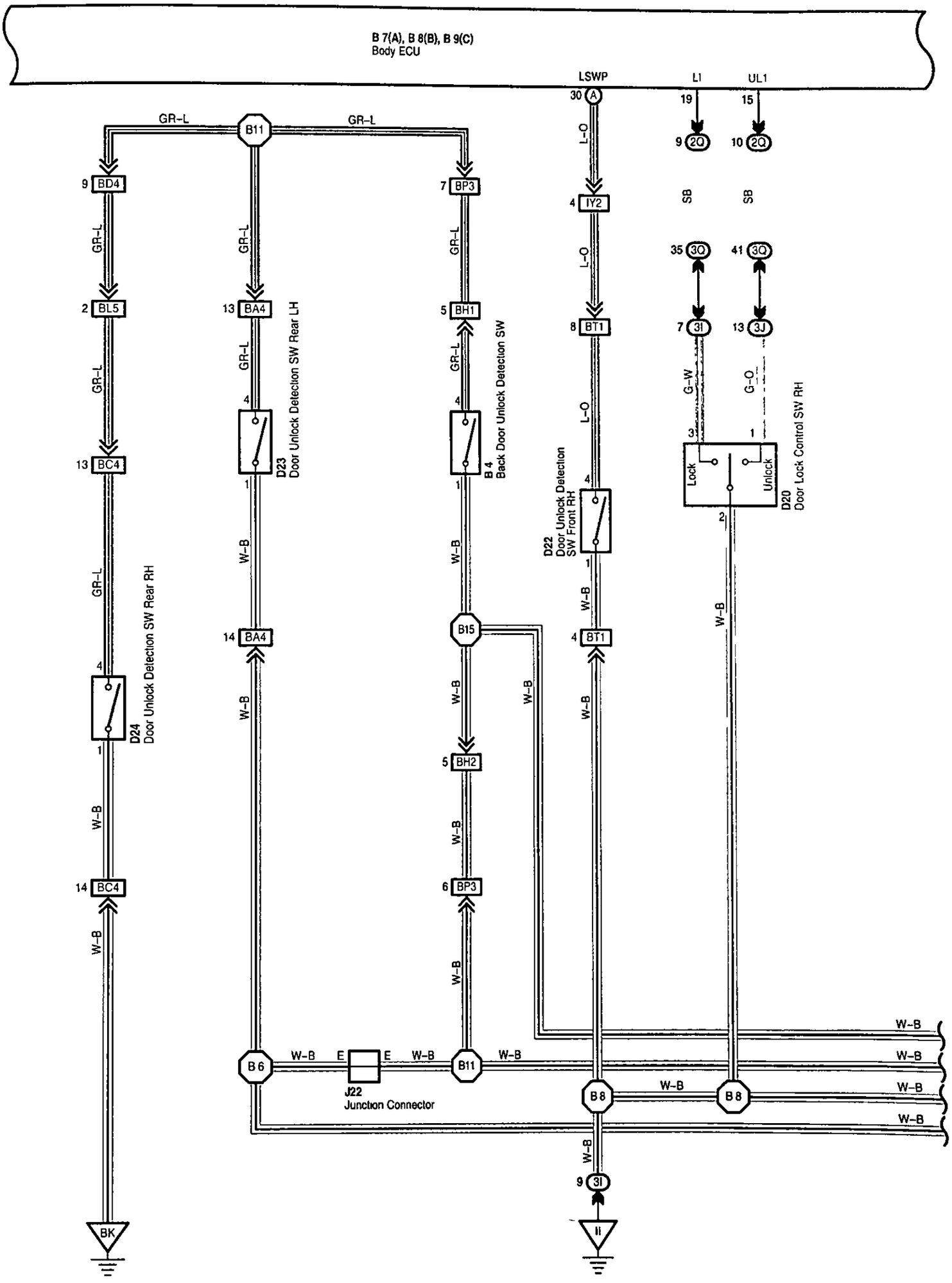
B 7(A), B 8(B), B 9(C)
Body ECU
LSWP
LI
UL1
30 A
19
15
9 2Q
10 2Q
L-O
4 IY2
SB
SB
35 3Q
41 3Q
8 BT1
7 3I
13 3J
G-W
G-O
3
1
Lock
Unlock
2
D20
Door Lock Control SW RH
D22
Door Unlock Detection
SW Front RH
4
1
W-B
4 BT1
GR-L
B11
9 BD4
2 BL5
13 BC4
4
1
D24
Door Unlock Detection SW Rear RH
14 BC4
BK
13 BA4
4
1
D23
Door Unlock Detection SW Rear LH
14 BA4
7 BP3
5 BH1
4
1
B 4
Back Door Unlock Detection SW
B15
5 BH2
6 BP3
B6
E
J22
Junction Connector
B11
B8
B8
9 3I
II
W-B

Theft Deterrent

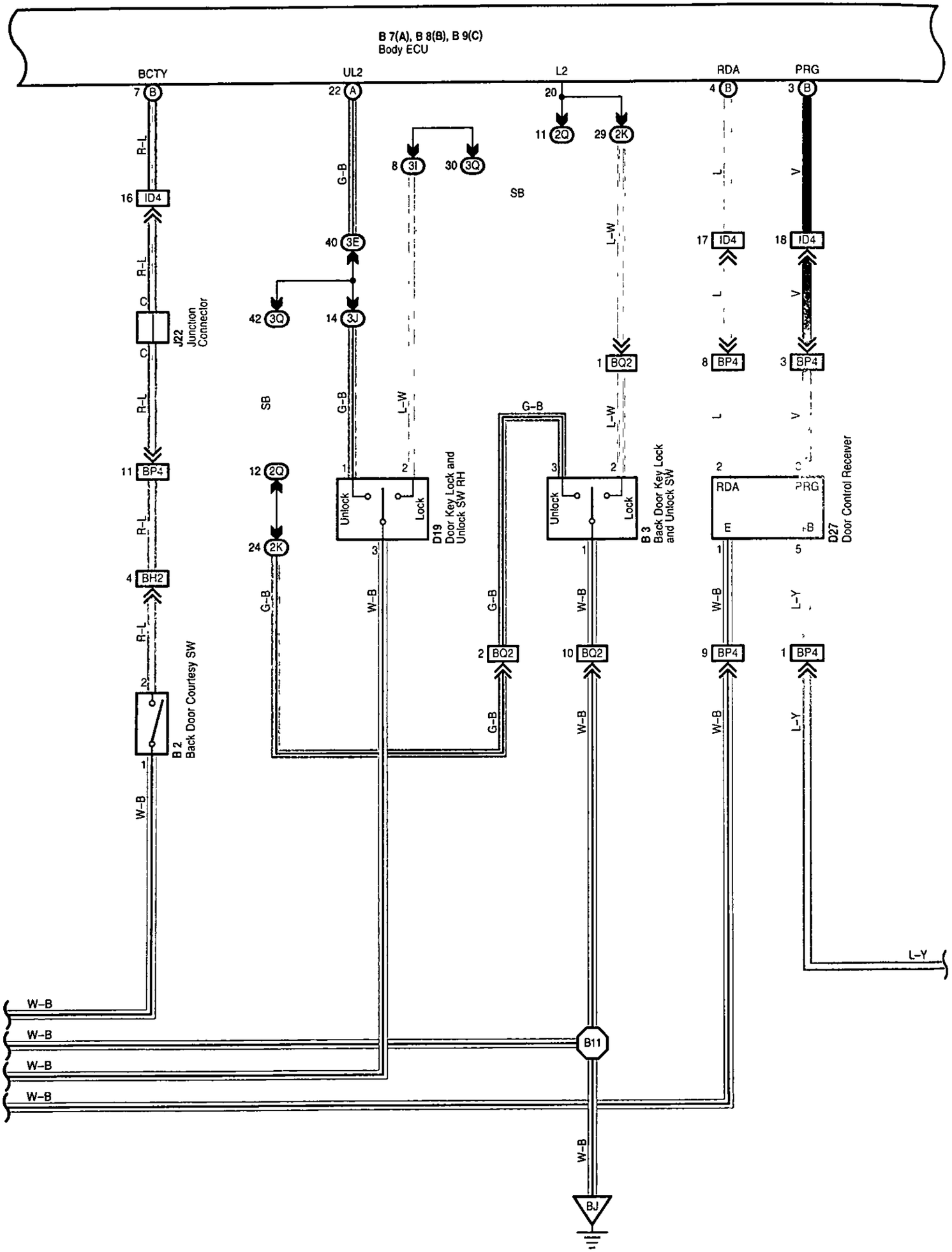

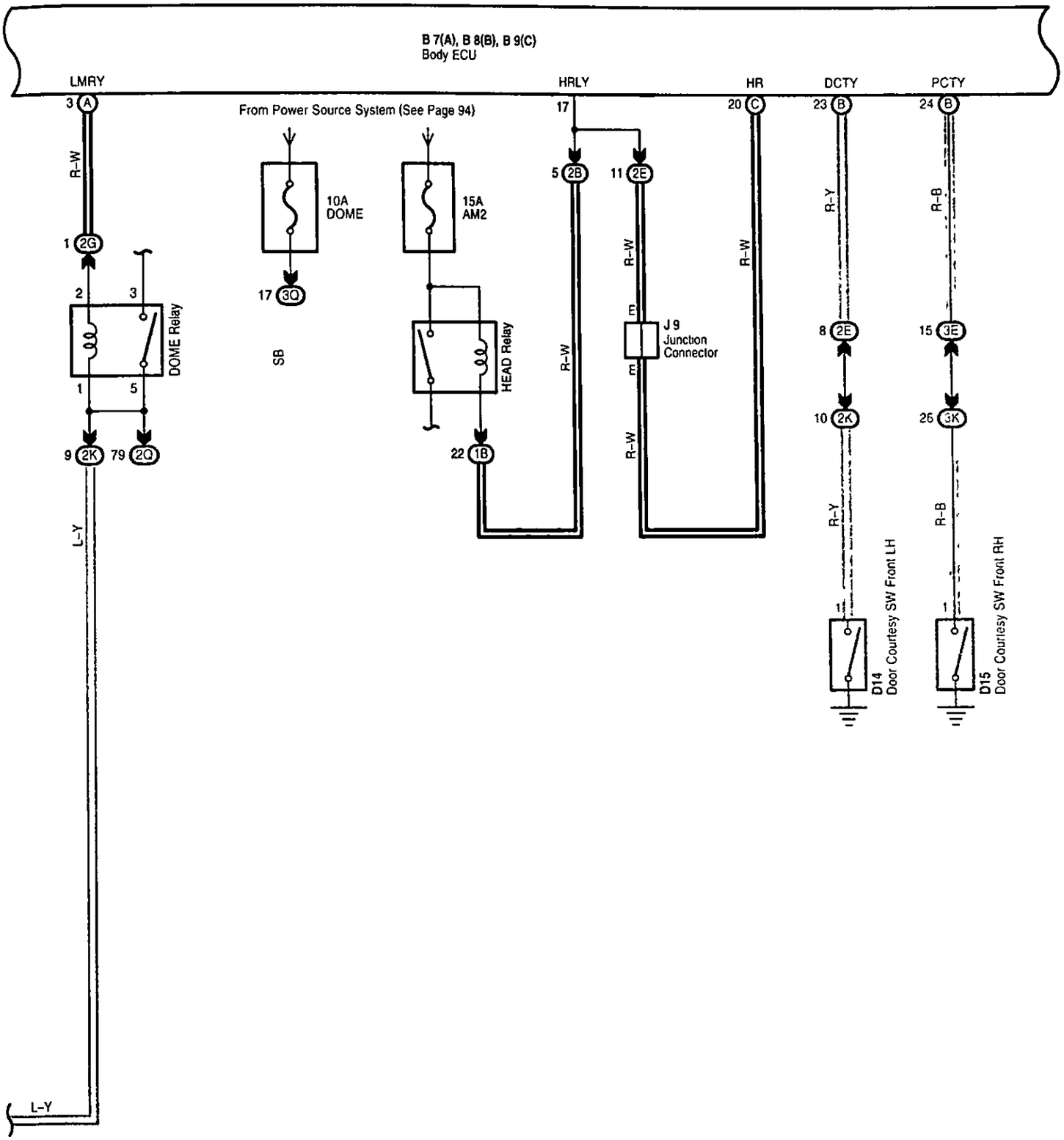
B 7(A), B 8(B), B 9(C)
Body ECU
LMRY
HRLY
HR
DCTY
PCTY
From Power Source System (See Page 94)
3 A
1 2G
R-W
2
3
1
5
DOME Relay
9 2K
79 2Q
L-Y
L-Y
10A
DOME
17 3Q
SB
15A
AM2
HEAD Relay
22 1B
17
5 2B
11 2E
R-W
R-W
m
m
J 9
Junction
Connector
R-W
R-W
20 C
23 B
R-Y
8 2E
10 2K
R-Y
D14
Door Courtesy SW Front LH
24 B
R-B
15 3E
26 3K
R-B
D15
Door Courtesy SW Front RH

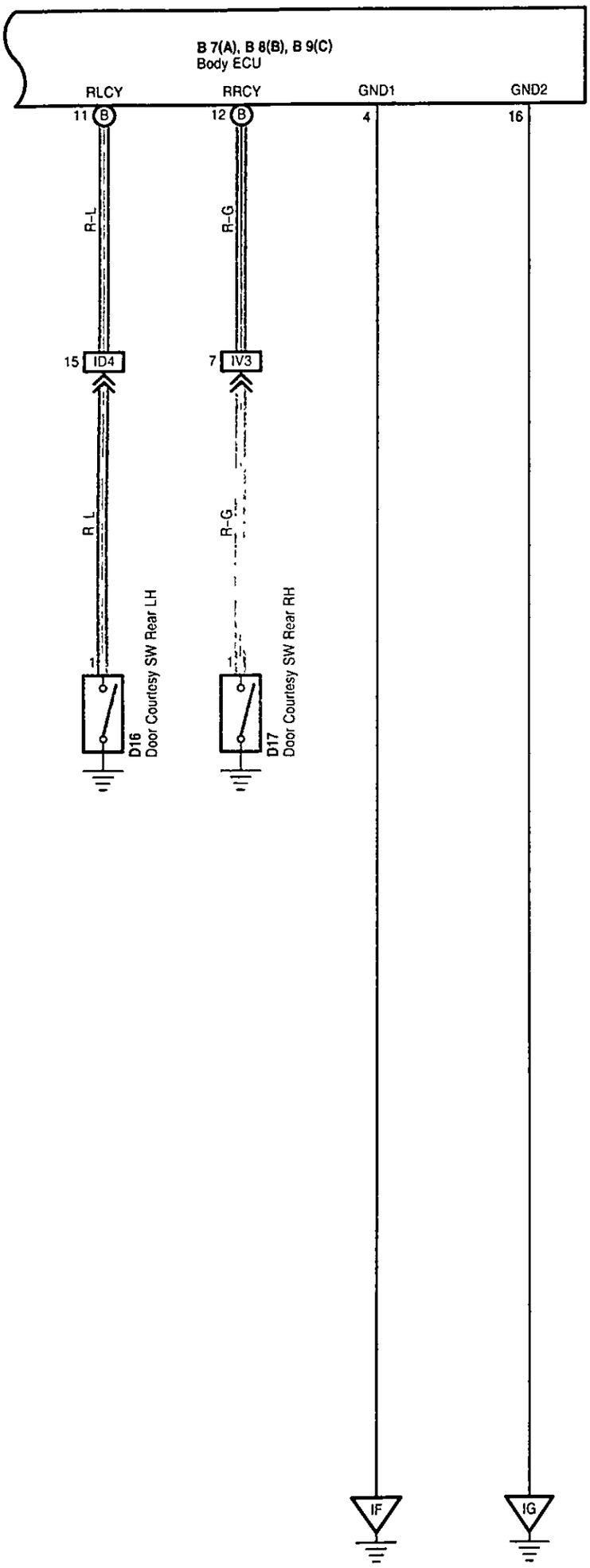
B 7(A), B 8(B), B 9(C)
Body ECU
RLCY
RRCY
GND1
GND2
11
12
4
16
R-L
R-G
15
ID4
7
IV3
R-L
R-G
1
1
D16
Door Courtesy SW Rear LH
D17
Door Courtesy SW Rear RH
IF
IG

Service Hints

D18, D19 Door Key Lock and Unlock SW LH, RH

1-3 : Closed with door lock cylinder unlocked with key
2-3 : Closed with door lock cylinder locked with key

B3 Back Door Key Lock and Unlock SW

3-1 : Closed with door lock cylinder unlocked with key
2-1 : Closed with door lock cylinder locked with key

E3 Engine Hood Courtesy SW

1-2 : Opened with engine hood open

U1 Unlock Warning SW

2-1 : Closed with ignition key in cylinder

T5 Theft Deterrent ECU

2, 3-Ground : Always approx 12 volts
10-Ground : Approx. 12 volts with ignition SW at ON or ST position
29-Ground : Always continuity
12-Ground : Continuity with ignition key in cylinder
34-Ground : Continuity with engine hood close

○ : Parts Location

Code	See Page	Code	See Page	Code	See Page
B2	72	D18	72	J10	71
B3	72	D19	72	J14	71
B4	72	D20	72	J22	72
B7 A	70	D21	72	M5 A	71
B8 B	70	D22	72	M8 C	71
B9 C	70	D23	72	M9 B	71
D7	70	D24	72	P12	73
D14	72	D27	72	T1	69
D15	72	E3	68	T5	71
D16	72	F15	68	U1	71
D17	72	J9	71	Z1	71

▭ : Junction Block and Wire Harness Connector

Code	See Page	Junction Block and Wire Harness (Connector Location)
1B 1C	24	Engine Room No.2 Wire and Engine Room J/B (Engine Compartment Left)
2B	28	Engine Room No 2 Wire and Cowl Side J/B LH (Left Kick Panel)
2E 2G	28	Dash Wire and Cowl Side J/B LH (Left Kick Panel)
2I	28	Front Door LH Wire and Cowl Side J/B LH (Left Kick Panel)
2K	28	Floor No 1 Wire and Cowl Side J/B LH (Left Kick Panel)
2Q	30	Instrument Panel Integration Wire and Cowl Side J/B LH (Left Kick Panel)
3B	40	Engine Room No.2 Wire and Cowl Side J/B RH (Right Kick Panel)
3D 3E	40	Dash Wire and Cowl Side J/B RH (Right Kick Panel)
3I 3J	40	Front Door RH Wire and Cowl Side J/B RH (Right Kick Panel)
3K	40	Floor No 2 Wire and Cowl Side J/B RH (Right Kick Panel)
3P	43	Dash Wire and Cowl Side J/B RH (Right Kick Panel)
3Q	42	Instrument Panel Integration Wire and Cowl Side J/B RH (Right Kick Panel)
4D	52	Dash Wire and J/B No 4 (Instrument Panel Center)
5B	56	Dash Wire and J/B No 5 (Behind the Combination Meter)
5D	56	Engine Room No 2 Wire and J/B No.5 (Behind the Combination Meter)
7B	64	Dash Wire and J/B No.7 (Behind the Grove Box)

: Connector Joining Wire Harness and Wire Harness

Code	See Page	Joining Wire Harness and Wire Harness (Connector Location)
EA2	76	Engine Room Main Wire and Engine Room No 2 Wire (Engine Compartment Right)
IC2	78	Front Door LH Wire and Dash Wire (Left Kick Panel)
ID4	78	Dash Wire and Floor No 1 Wire (Left Kick Panel)
IL3	80	Instrument Panel Integration Wire and Computer Wire (Instrument Panel Center)
IU3	82	Instrument Panel Integration Wire and Dash Wire (Behind the Glove Box)
IV3	82	Dash Wire and Floor No 2 Wire (Right Kick Panel)
IY2	82	Front Door RH Wire and Dash Wire (Right Kick Panel)
BA4	86	Rear Door LH Wire and Floor No 1 Wire (Left Side of Center Pillar)
BC4	86	Rear Door RH Wire and Floor No 2 Wire (Right Side of Center Pillar)
BD4	86	Floor No 3 Wire and Floor No.1 Wire (Left Rear Side Quarter Panel)
BH1	86	Pillar No 1 Wire and Back Door Upper Wire (Left Side of Back Door)
BH2		
BL5	88	Floor No 2 Wire and Floor No 3 Wire (Right Side of Rear Floor Crossmember)
BP3	88	Pillar No.1 Wire and Floor No.1 Wire (Left Rear Side Quarter Panel)
BP4		
BQ2	88	Back Door Lower Wire and Floor No 1 Wire (Left Rear Side Quarter Panel)
BS1	88	Door Lock LH Sub Wire and Front Door LH Wire (Front Door LH)
BT1	88	Door Lock RH Sub Wire and Front Door RH Wire (Front Door RH)

: Ground Points

Code	See Page	Ground Points Location
EA	76	Front Right Side of Fender Apron
IF	78	Set Bolt of Cowl Side J/B LH
IG		
II	78	Set Bolt of Cowl Side J/B RH
BJ	86	Under the Driver's Seat
BK	86	Front Side Under the Front Passenger's Seat

: Splice Points

Code	See Page	Wire Harness with Splice Points	Code	See Page	Wire Harness with Splice Points
B2	88	Front Door LH Wire	B11	88	Floor No.1 Wire
B6	88	Floor No.1 Wire	B15	88	Back Door Upper Wire
B8	88	Front Door RH Wire			

Power Seat

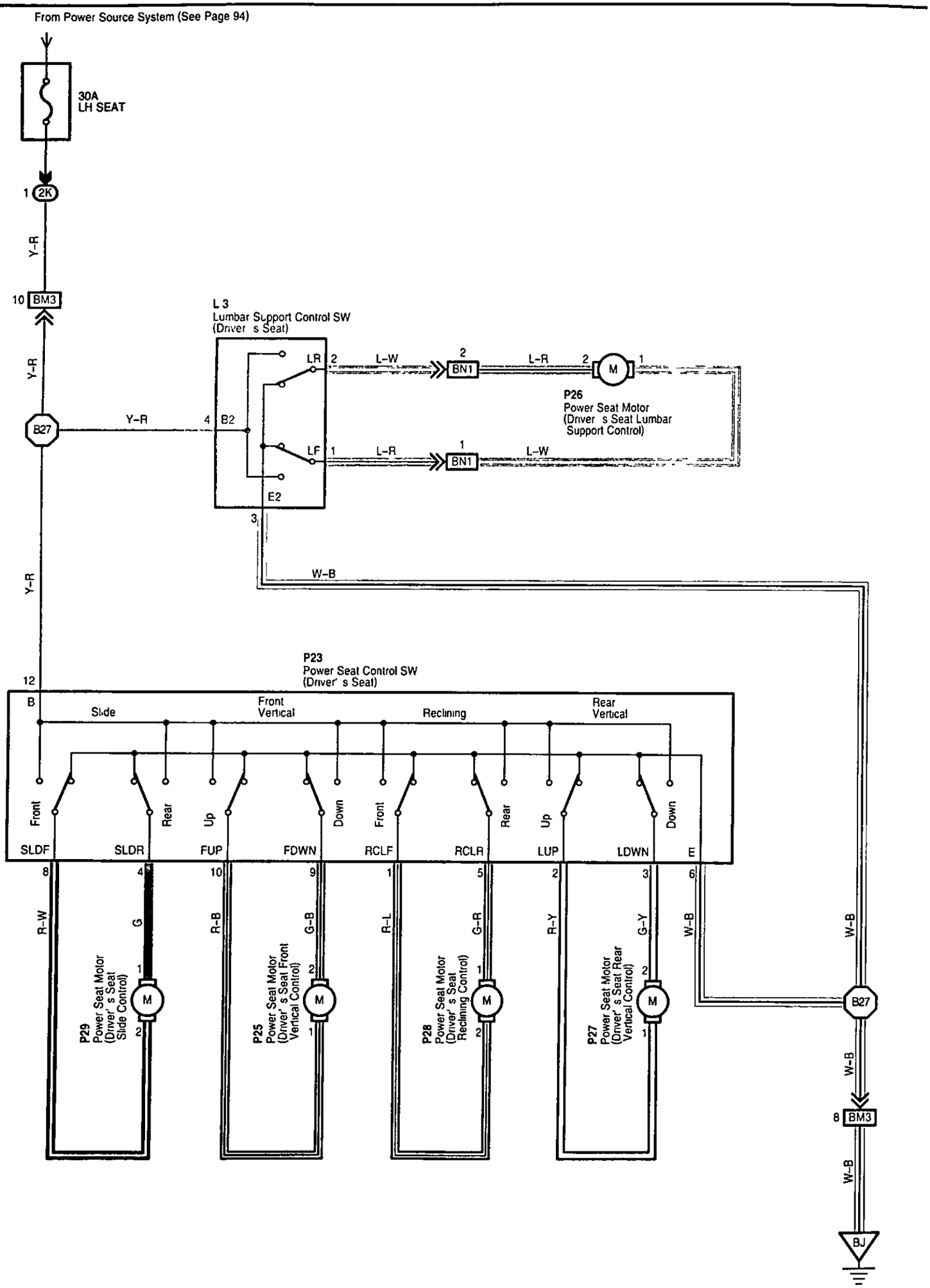
From Power Source System (See Page 94)
30A
LH SEAT
1 2K
Y-R
10 BM3
L 3
Lumbar Support Control SW
(Driver s Seat)
LR
LF
E2
L-W
L-R
BN1
M
P26
Power Seat Motor
(Driver s Seat Lumbar
Support Control)
B27
Y-R
4 B2
W-B
P23
Power Seat Control SW
(Driver' s Seat)
12
B
Slide
Front
Vertical
Reclining
Rear
Vertical
Front
Rear
Up
Down
SLDF
SLDR
FUP
FDWN
RCLF
RCLR
LUP
LDWN
E
R-W
G
R-B
G-B
R-L
G-R
R-Y
G-Y
W-B
P29
Power Seat Motor
(Driver' s Seat
Slide Control)
P25
Power Seat Motor
(Driver' s Seat Front
Vertical Control)
P28
Power Seat Motor
(Driver' s Seat
Reclining Control)
P27
Power Seat Motor
(Driver' s Seat Rear
Vertical Control)
8 BM3
BJ

From Power Source System (See Page 94)

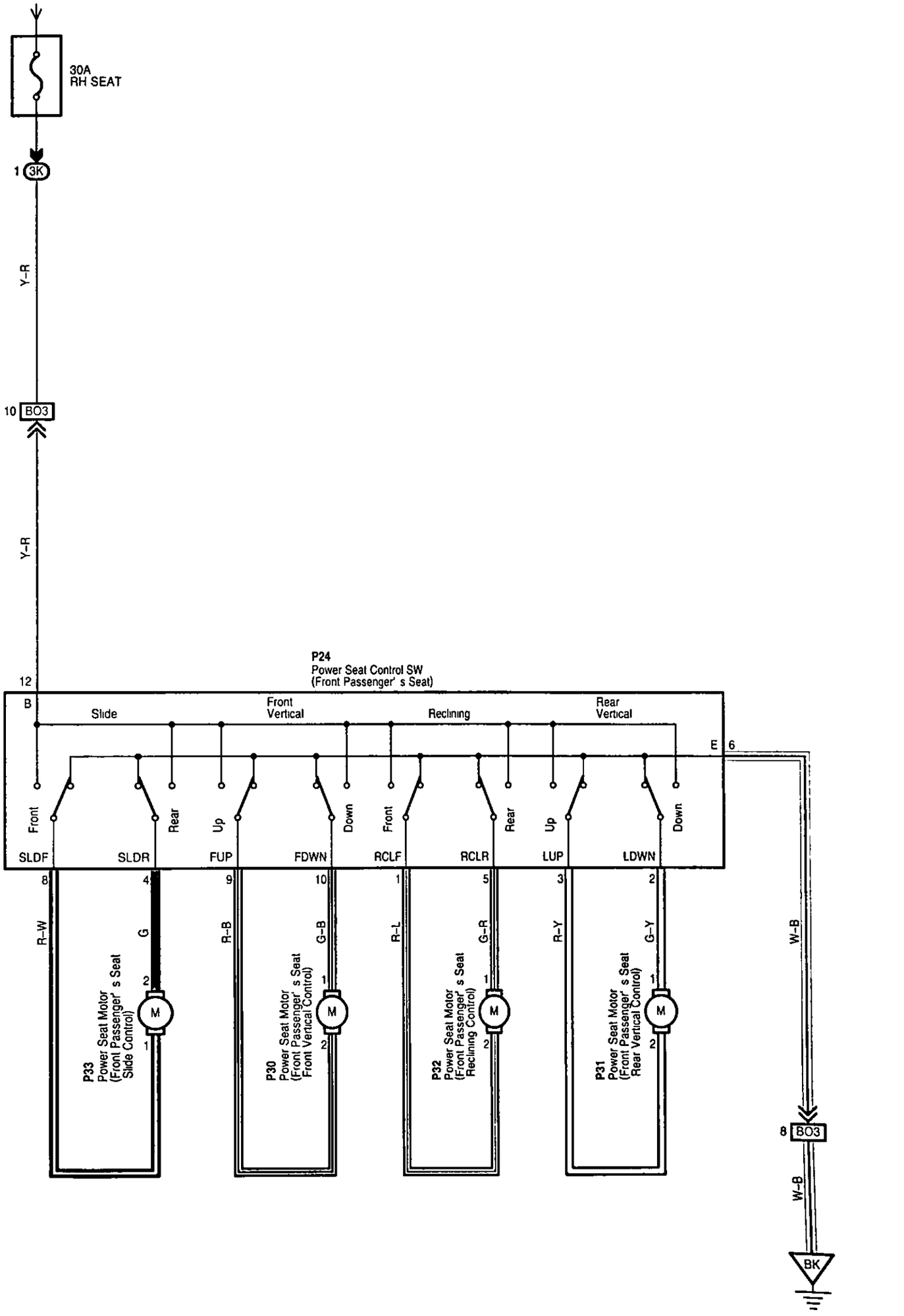

Power Seat

Service Hints

P23 Power Seat Control SW (Driver's Seat)

12-1 : Closed with driver's seat at front reclining operation
12-5 : Closed with driver's seat at rear reclining operation
12-10 : Closed with driver's seat at front vertical up operation
12-9 : Closed with driver's seat at front vertical down operation
12-2 : Closed with driver's seat at rear vertical up operation
12-3 : Closed with driver's seat at rear vertical down operation
12-8 : Closed with driver's seat at front slide operation
12-4 : Closed with driver's seat at rear slide operation
6-Ground : Always continuity

P24 Power Seat Control SW (Front Passenger's Seat)

12-1 : Closed with front passenger's seat at front reclining operation
12-5 : Closed with front passenger's seat at rear reclining operation
12-9 : Closed with front passenger's seat at front vertical up operation
12-10 : Closed with front passenger's seat at front vertical down operation
12-3 . Closed with front passenger's seat at rear vertical up operation
12-2 : Closed with front passenger's seat at rear vertical down operation
12-8 : Closed with front passenger's seat at front slide operation
12-4 : Closed with front passenger's seat at rear slide operation
6-Ground . Always continuity

○ : Parts Location

Code	See Page	Code	See Page	Code	See Page
L3	74	P26	74	P30	74
P23	74	P27	74	P31	74
P24	74	P28	74	P32	74
P25	74	P29	74	P33	74

⬭ : Junction Block and Wire Harness Connector

Code	See Page	Junction Block and Wire Harness (Connector Location)
2K	28	Floor No.1 Wire and Cowl Side J/B LH (Left Kick Panel)
3K	40	Floor No.2 Wire and Cowl Side J/B RH (Right Kick Panel)

□ : Connector Joining Wire Harness and Wire Harness

Code	See Page	Joining Wire Harness and Wire Harness (Connector Location)
BM3	90	Floor No.1 Wire and Front Seat LH Wire (Front Side Under the Driver's Seat)
BN1	90	Seat No.2 Wire and Front Seat LH Wire (Rear Side Under the Driver's Seat)
BO3	90	Floor No.2 Wire and Front Seat RH Wire (Front Side Under the Front Passenger's Seat)

▽ : Ground Points

Code	See Page	Ground Points Location
BJ	86	Under the Driver's Seat
BK	86	Front Side Under the Front Passenger's Seat

⬡ : Splice Points

Code	See Page	Wire Harness with Splice Points	Code	See Page	Wire Harness with Splice Points
B27	90	Front Seat LH Wire			

Power Tilt and Power Telescopic

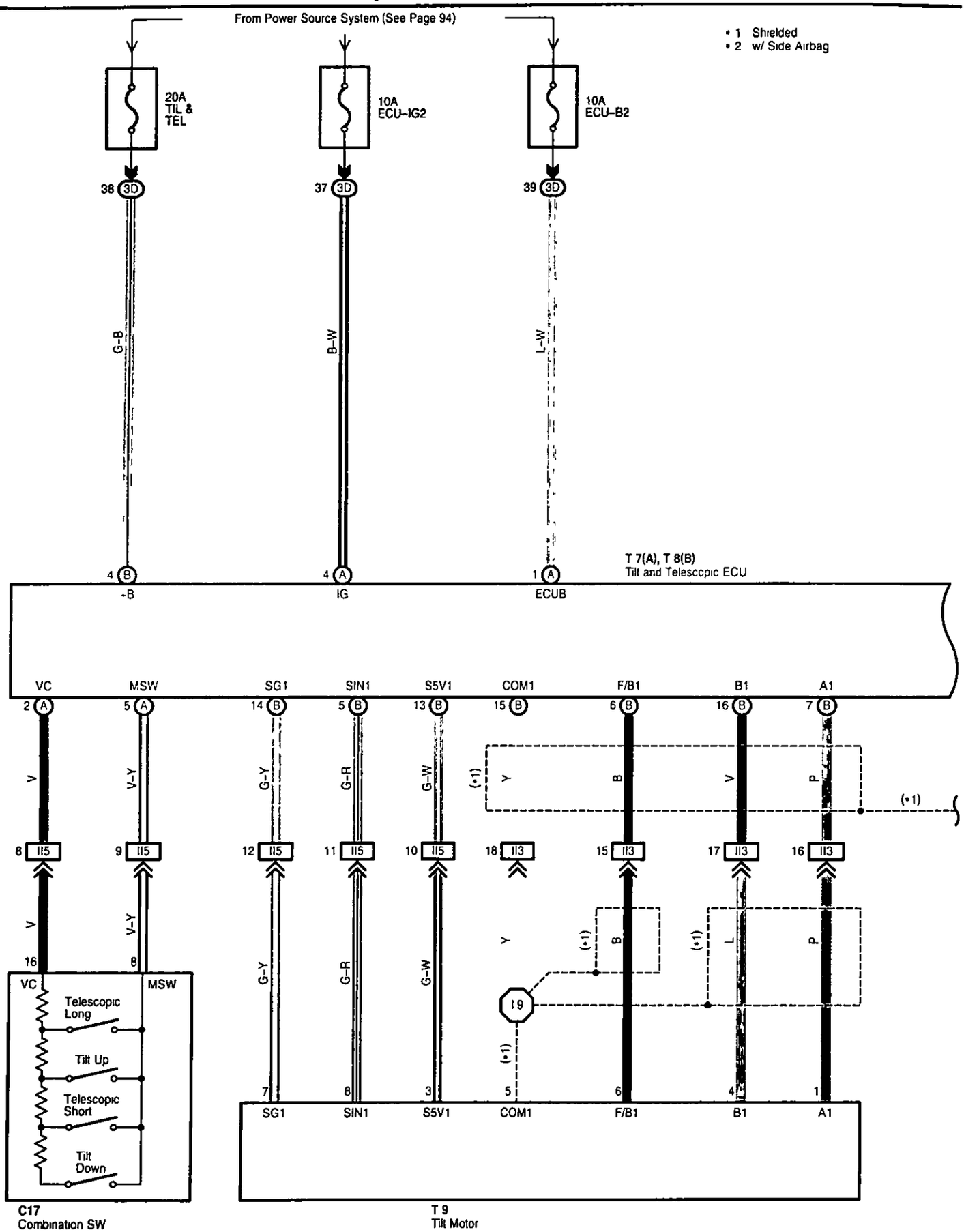

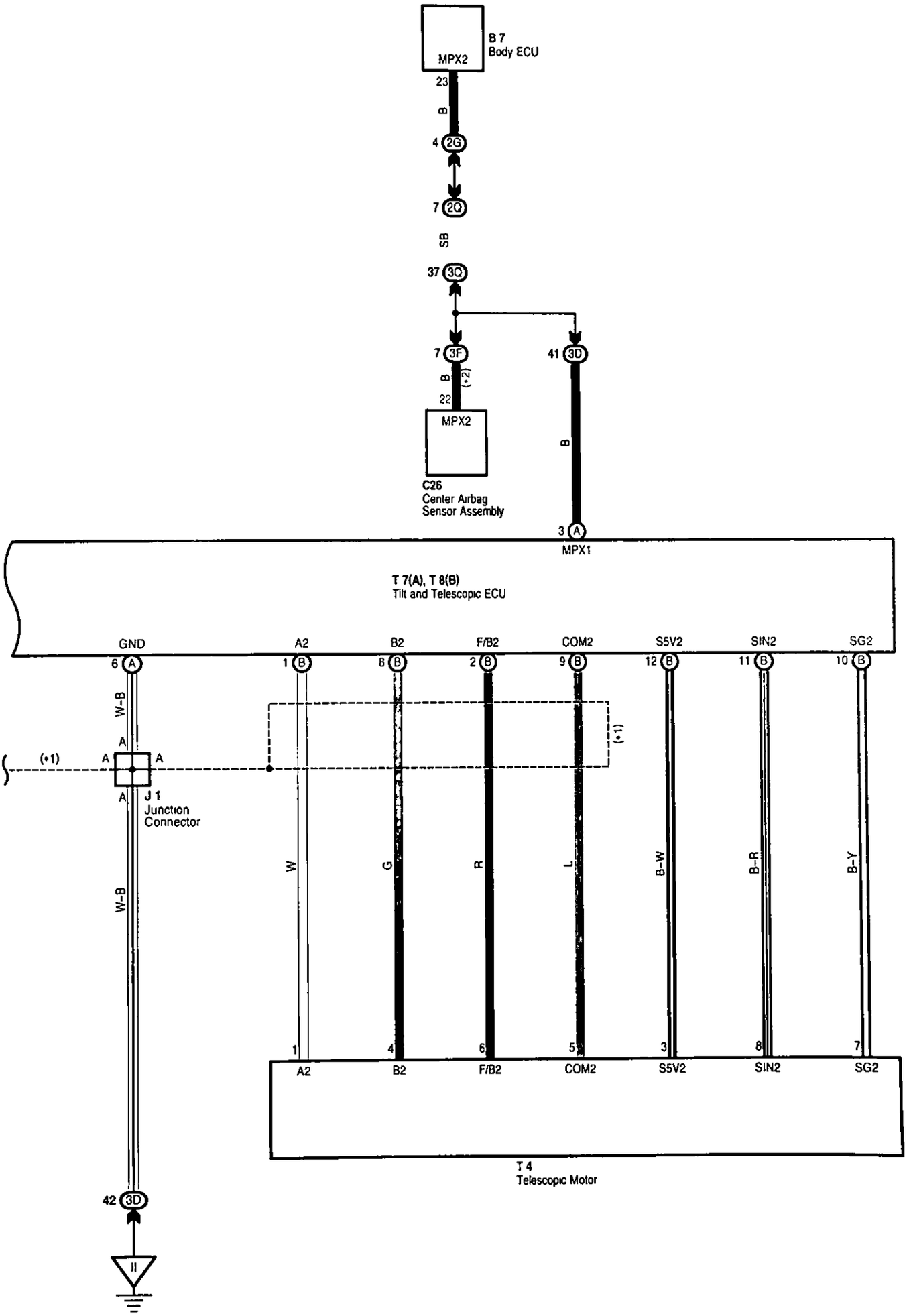
B 7
Body ECU
MPX2
23
B
4 2G
7 2Q
SB
37 3Q
7 3F
B
(*2)
22
MPX2
C26
Center Airbag
Sensor Assembly
41 3D
B
3 A
MPX1
T 7(A), T 8(B)
Tilt and Telescopic ECU
GND
A2
B2
F/B2
COM2
S5V2
SIN2
SG2
6 A
1 B
8 B
2 B
9 B
12 B
11 B
10 B
W-B
A
(*1)
A
A
A
A
J 1
Junction
Connector
(*1)
W-B
W
G
R
L
B-W
B-R
B-Y
1
4
6
5
3
8
7
A2
B2
F/B2
COM2
S5V2
SIN2
SG2
T 4
Telescopic Motor
42 3D

Power Tilt and Power Telescopic

System Outline

This system provides the automatic tilt and telescopic mechanisms using the motor drive, tilt and telescopic ECU control, allowing variable steering movement in the back and forth, and vertical directions. This makes it possible to set the steering to the desired steering position.

Service Hints

T7 (A), T8 (B) Tilt and Telescopic ECU

(A) 1-Ground · Always approx. 12 volts
(B) 4-Ground : Always approx. 12 volts
(A) 4-Ground : Approx. 12 volts with ignition SW at ON or ST position
(A) 6-Ground : Always continuity

C17 Combination SW

16-8 · Approx. 160 Ω with telescopic long operation
: Approx. 360 Ω with tilt up operation
: Approx. 790 Ω with telescopic short operation
: Approx. 1.99 kΩ with tilt down operation

○ : Parts Location

Code	See Page	Code	See Page	Code	See Page
B7	70	J1	71	T8 B	71
C17	70	T4	71	T9	71
C26	70	T7 A	71		

⬭ : Junction Block and Wire Harness Connector

Code	See Page	Junction Block and Wire Harness (Connector Location)
2G	28	Dash Wire and Cowl Side J/B LH (Left Kick Panel)
2Q	30	Instrument Panel Integration Wire and Cowl Side J/B LH (Left Kick Panel)
3D 3F	40	Dash Wire and Cowl Side J/B RH (Right Kick Panel)
3Q	42	Instrument Panel Integration Wire and Cowl Side J/B RH (Right Kick Panel)

▭ : Connector Joining Wire Harness and Wire Harness

Code	See Page	Joining Wire Harness and Wire Harness (Connector Location)
II3 II5	80	Dash Wire and Column Wire (Near the Ignition SW)

▽ : Ground Points

Code	See Page	Ground Points Location
II	78	Set Bolt of Cowl Side J/B RH

⬡ : Splice Points

Code	See Page	Wire Harness with Splice Points	Code	See Page	Wire Harness with Splice Points
I9	80	Column Wire			

Remote Control Mirror

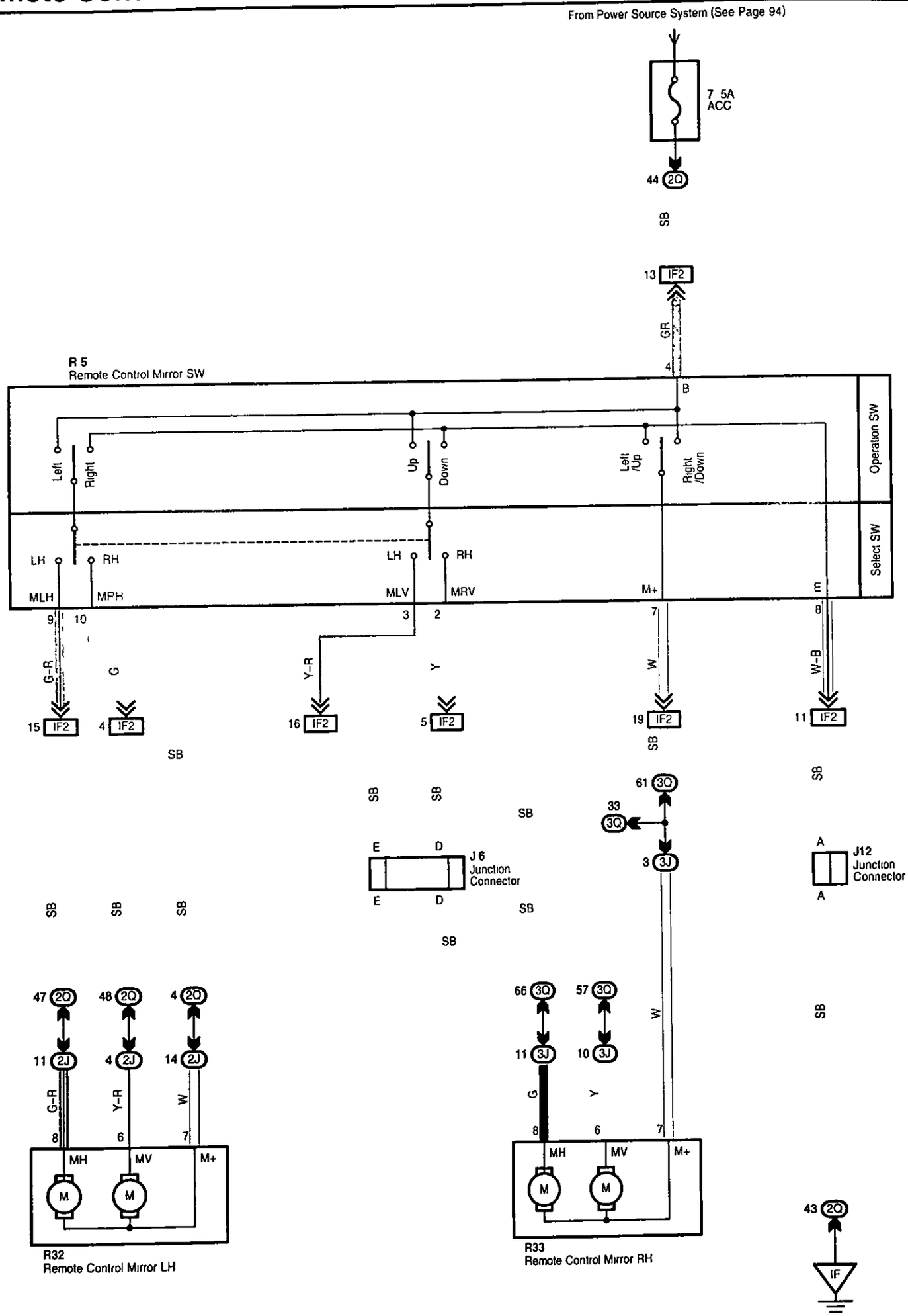

Service Hints

R5 Remote Control Mirror SW

7-8 : Continuity with operation SW at LEFT or UP position
4-7 : Continuity with operation SW at RIGHT or DOWN position
4-9 : Continuity with operation SW at LEFT position and the select SW at LH position
4-3 : Continuity with operation SW at UP position and the select SW at LH position
8-10 : Continuity with operation SW at RIGHT position and the select SW at RH position
2-8 : Continuity with operation SW at DOWN position and the select SW at RH position
4-Ground : Approx. 12 volts with ignition SW at ACC or ON position
8-Ground : Always continuity

○ : Parts Location

Code	See Page	Code	See Page	Code	See Page
J6	71	R5	71	R33	73
J12	71	R32	73		

⬭ : Junction Block and Wire Harness Connector

Code	See Page	Junction Block and Wire Harness (Connector Location)
2J	28	Front Door LH Wire and Cowl Side J/B LH (Left Kick Panel)
2Q	30	Instrument Panel Integration Wire and Cowl Side J/B LH (Left Kick Panel)
3J	40	Front Door RH Wire and Cowl Side J/B RH (Right Kick Panel)
3Q	42	Instrument Panel Integration Wire and Cowl Side J/B RH (Right Kick Panel)

□ : Connector Joining Wire Harness and Wire Harness

Code	See Page	Joining Wire Harness and Wire Harness (Connector Location)
IF2	78	Instrument Panel Integration Wire and Instrument Panel Wire (Left Side of Instrument Panel)

▽ : Ground Points

Code	See Page	Ground Points Location
IF	78	Set Bolt of Cowl Side J/B LH

Automatic Glare-Resistant EC Mirror with Compass

From Power Source System (See Page 94)

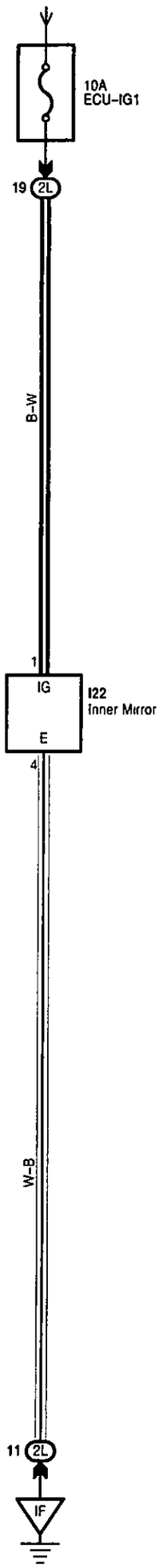

Service Hints

I22 Inner Mirror

1-Ground : Approx. 12 volts with ignition SW at ON or ST position
4-Ground : Always continuity

○ : Parts Location

Code	See Page	Code	See Page	Code	See Page
I22	72				

⬭ : Junction Block and Wire Harness Connector

Code	See Page	Junction Block and Wire Harness (Connector Location)
2L	28	Roof No 1 Wire and Cowl Side J/B LH (Left Kick Panel)

▽ : Ground Points

Code	See Page	Ground Points Location
IF	78	Set Bolt of Cowl Side J/B LH

Power Rear Quarter Window

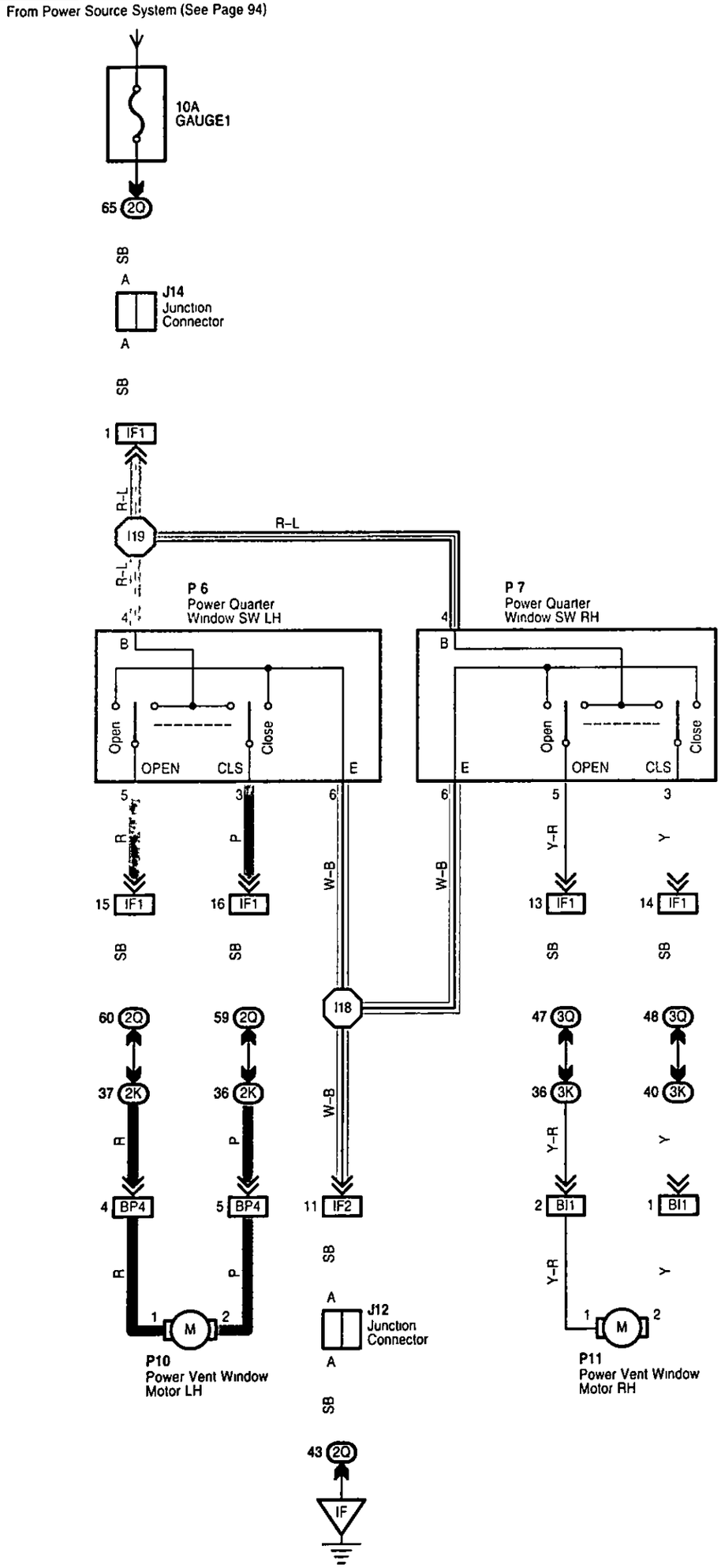

Service Hints

P6 Power Quarter Window SW LH

4-Ground : Approx. 12 volts with ignition SW at ON or ST position
6-Ground : Always continuity

P7 Power Quarter Window SW RH

4-Ground : Approx. 12 volts with ignition SW at ON or ST position
6-Ground : Always continuity

○ : Parts Location

Code	See Page	Code	See Page	Code	See Page
J12	71	P6	71	P10	73
J14	71	P7	71	P11	73

⬭ : Junction Block and Wire Harness Connector

Code	See Page	Junction Block and Wire Harness (Connector Location)
2K	28	Floor No 1 Wire and Cowl Side J/B LH (Left Kick Panel)
2Q	30	Instrument Panel Integration Wire and Cowl Side J/B LH (Left Kick Panel)
3K	40	Floor No.2 Wire and Cowl Side J/B RH (Right Kick Panel)
3Q	42	Instrument Panel Integration Wire and Cowl Side J/B RH (Right Kick Panel)

□ : Connector Joining Wire Harness and Wire Harness

Code	See Page	Joining Wire Harness and Wire Harness (Connector Location)
IF1	78	Instrument Panel Integration Wire and Instrument Panel Wire (Left Side of Instrument Panel)
IF2		
BI1	86	Roof No 2 Wire and Floor No.2 Wire (Right Side Rear Quarter Panel)
BP4	88	Pillar No.1 Wire and Floor No 1 Wire (Left Rear Side Quarter Panel)

▽ : Ground Points

Code	See Page	Ground Points Location
IF	78	Set Bolt of Cowl Side J/B LH

⬡ : Splice Points

Code	See Page	Wire Harness with Splice Points	Code	See Page	Wire Harness with Splice Points
I18	80	Instrument Panel Wire	I19	80	Instrument Panel Wire

Seat Heater

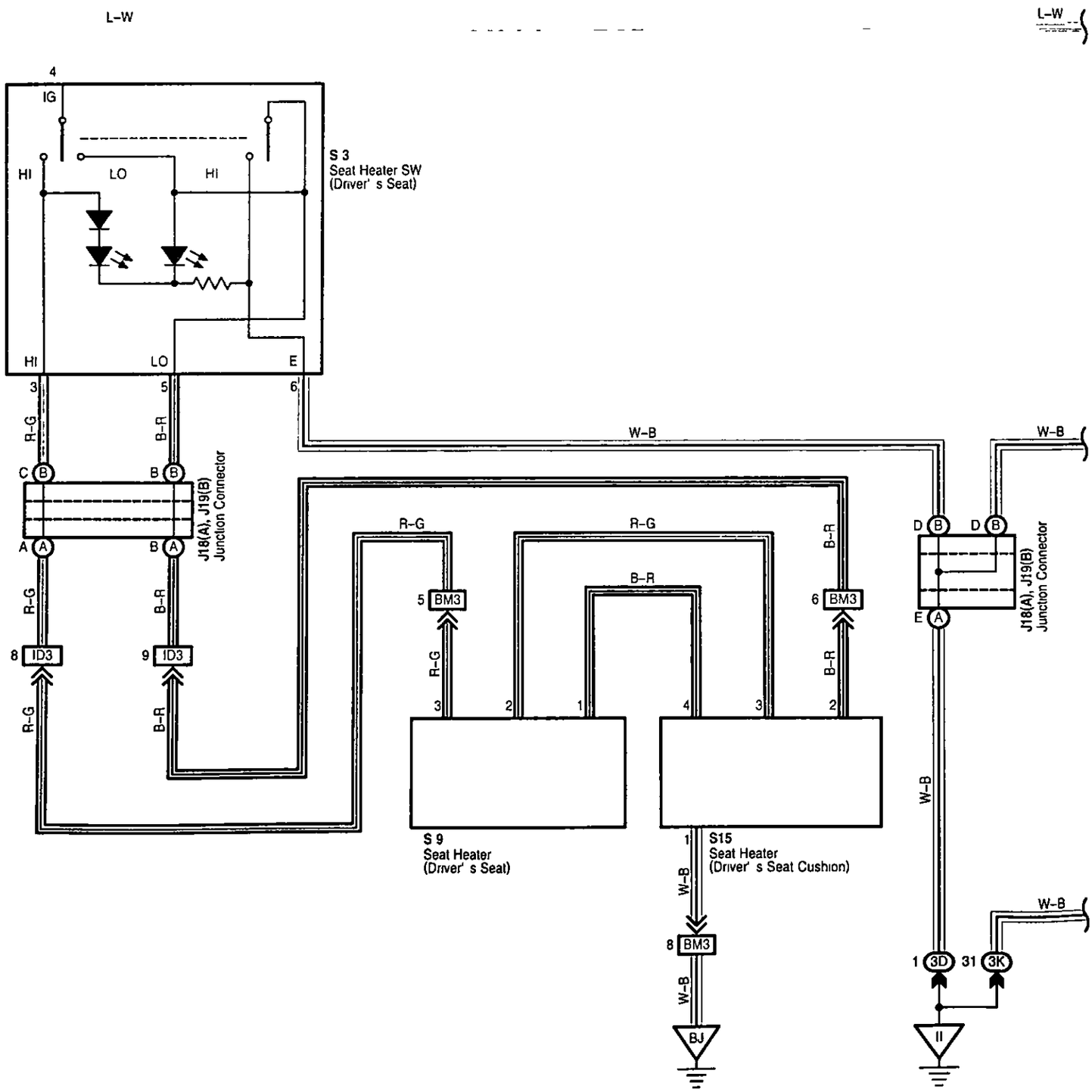
L-W
L-W
4
IG
HI
LO
HI
S 3
Seat Heater SW
(Driver' s Seat)
HI
LO
E
3
5
6
R-G
B-R
W-B
W-B
C
B
B
B
J18(A), J19(B)
Junction Connector
A
A
B
A
R-G
B-R
8
ID3
9
ID3
R-G
B-R
R-G
R-G
B-R
5
BM3
6
BM3
B-R
R-G
B-R
3
2
1
4
3
2
D
B
D
B
E
A
J18(A), J19(B)
Junction Connector
W-B
S 9
Seat Heater
(Driver' s Seat)
1
S15
Seat Heater
(Driver' s Seat Cushion)
W-B
8
BM3
W-B
BJ
W-B
1
3D
31
3K
II

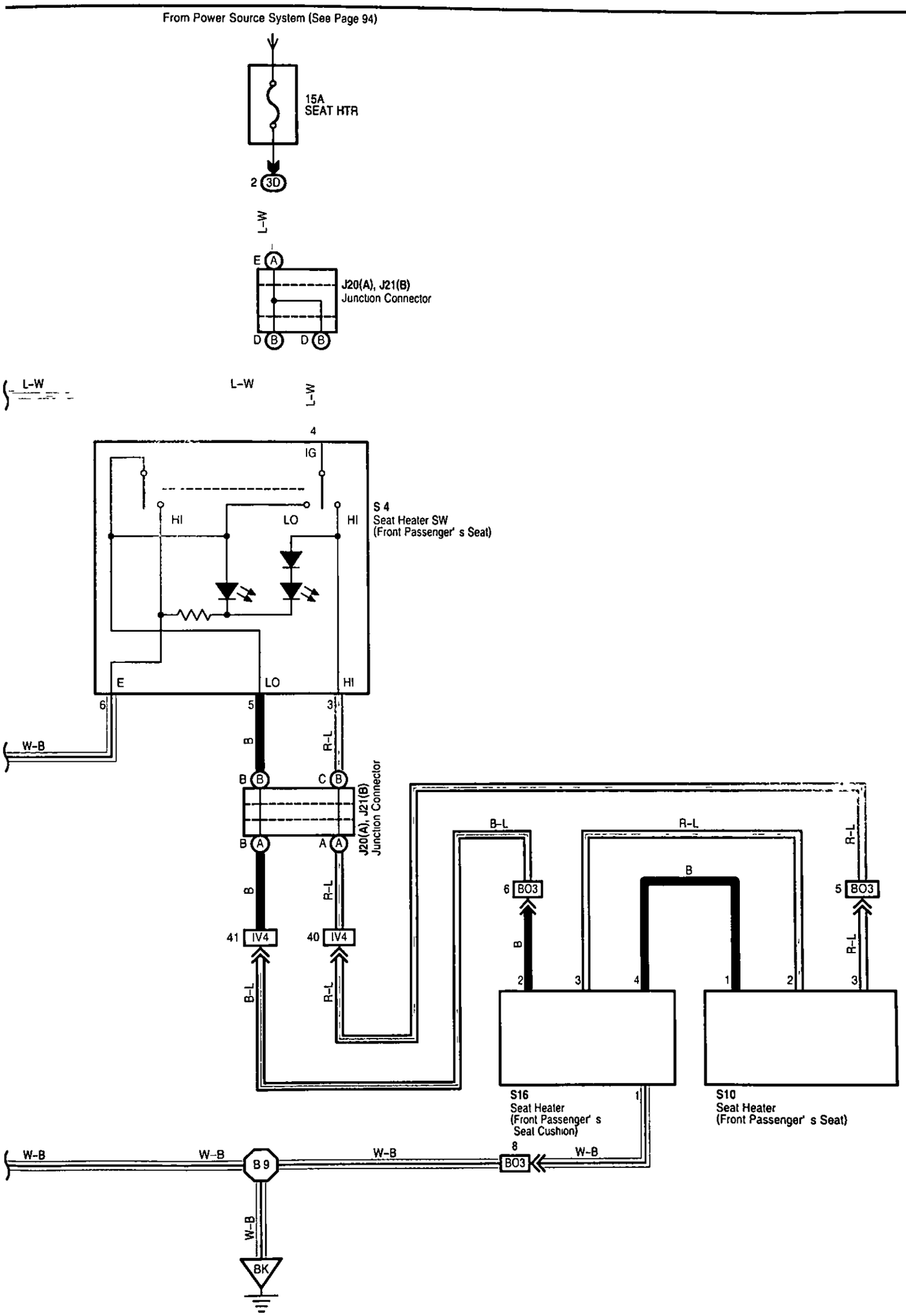
From Power Source System (See Page 94)
15A
SEAT HTR
2 3D
L-W
E A
J20(A), J21(B)
Junction Connector
D B D B
L-W
L-W
L-W
4
IG
HI
LO
HI
S 4
Seat Heater SW
(Front Passenger' s Seat)
E
LO
HI
6
5
3
W-B
B
R-L
B B
C B
B A
A A
J20(A), J21(B)
Junction Connector
B
R-L
41 IV4
40 IV4
B-L
R-L
B-L
R-L
R-L
B
6 BO3
5 BO3
B
R-L
2
3
4
1
2
3
S16
Seat Heater
(Front Passenger' s
Seat Cushion)
1
S10
Seat Heater
(Front Passenger' s Seat)
W-B
W-B
B 9
W-B
8
BO3
W-B
W-B
BK

Seat Heater

Service Hints

S3 Seat Heater SW (Driver's Seat)

4-Ground : Approx. 12 volts with ignition SW at ON or ST position

6-Ground : Always continuity

S4 Seat Heater SW (Front Passenger's Seat)

4-Ground : Approx. 12 volts with ignition SW at ON or ST position

6-Ground : Always continuity

○ : Parts Location

Code		See Page	Code	See Page	Code	See Page
J18	A	71	S3	71	S15	74
J19	B	71	S4	71	S16	74
J20	A	71	S9	74		
J21	B	71	S10	74		

⬭ : Junction Block and Wire Harness Connector

Code	See Page	Junction Block and Wire Harness (Connector Location)
3D	40	Dash Wire and Cowl Side J/B RH (Right Kick Panel)
3K	40	Floor No 2 Wire and Cowl Side J/B RH (Right Kick Panel)

▭ : Connector Joining Wire Harness and Wire Harness

Code	See Page	Joining Wire Harness and Wire Harness (Connector Location)
ID3	78	Dash Wire and Floor No 1 Wire (Left Kick Panel)
IV4	82	Dash Wire and Floor No 2 Wire (Right Kick Panel)
BM3	90	Floor No 1 Wire and Front Seat LH Wire (Front Side Under the Driver's Seat)
BO3	90	Floor No 2 Wire and Front Seat RH Wire (Front Side Under the Front Passenger's Seat)

▽ : Ground Points

Code	See Page	Ground Points Location
II	78	Set Bolt of Cowl Side J/B RH
BJ	86	Under the Driver's Seat
BK	86	Front Side Under the Front Passenger's Seat

⬡ : Splice Points

Code	See Page	Wire Harness with Splice Points	Code	See Page	Wire Harness with Splice Points
B9	88	Floor No 2 Wire			

Rear Window Defogger

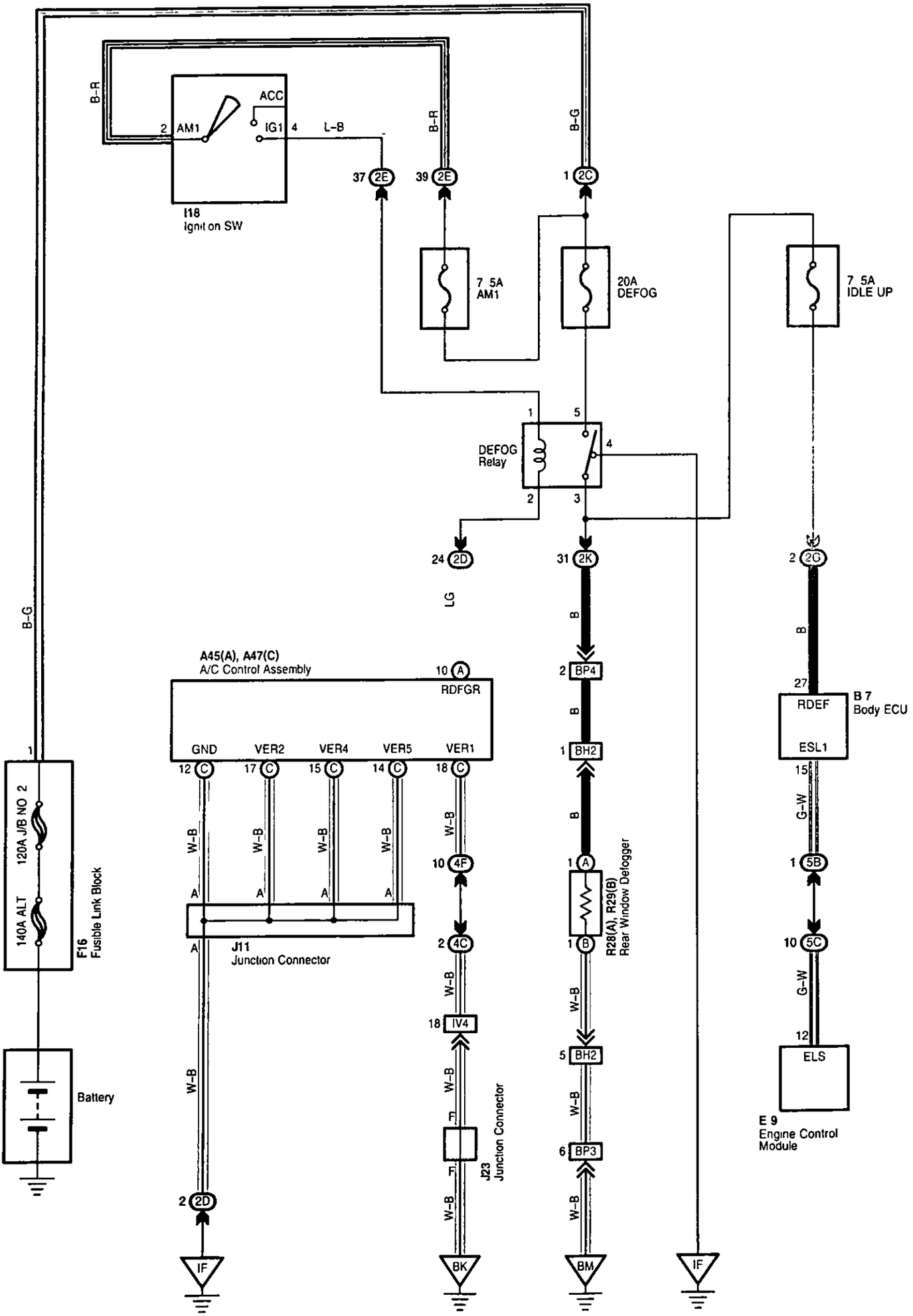

Service Hints

A45 (A), A47 (C) A/C Control Assembly

(A) 10–Ground : Approx. 12 volts with ignition SW at ON or ST position

(C) 12, (C) 14, (C) 15, (C) 17, (C) 18–Ground : Always continuity

○ : Parts Location

Code		See Page	Code	See Page	Code		See Page
A45	A	70	F16	68	R28	A	73
A47	C	70	I18	70	R29	B	73
B7		70	J11	71			
E9		70	J23	72			

⬭ : Junction Block and Wire Harness Connector

Code	See Page	Junction Block and Wire Harness (Connector Location)
2C	28	Engine Room No 2 Wire and Cowl Side J/B LH (Left Kick Panel)
2D	28	Dash Wire and Cowl Side J/B LH (Left Kick Panel)
2E		
2G		
2K	28	Floor No 1 Wire and Cowl Side J/B LH (Left Kick Panel)
4C	52	Dash Wire and J/B No 4 (Instrument Panel Center)
4F		
5B	56	Dash Wire and J/B No 5 (Behind the Combination Meter)
5C		

□ : Connector Joining Wire Harness and Wire Harness

Code	See Page	Joining Wire Harness and Wire Harness (Connector Location)
IV4	82	Dash Wire and Floor No 2 Wire (Right Kick Panel)
BH2	86	Pillar No 1 Wire and Back Door Upper Wire (Left Side of Back Door)
BP3	88	Pillar No.1 Wire and Floor No.1 Wire (Left Rear Side Quarter Panel)
BP4		

▽ : Ground Points

Code	See Page	Ground Points Location
IF	78	Set Bolt of Cowl Side J/B LH
BK	86	Front Side Under the Front Passenger's Seat
BM	86	Left Rear Side Quarter Panel

Mirror Heater

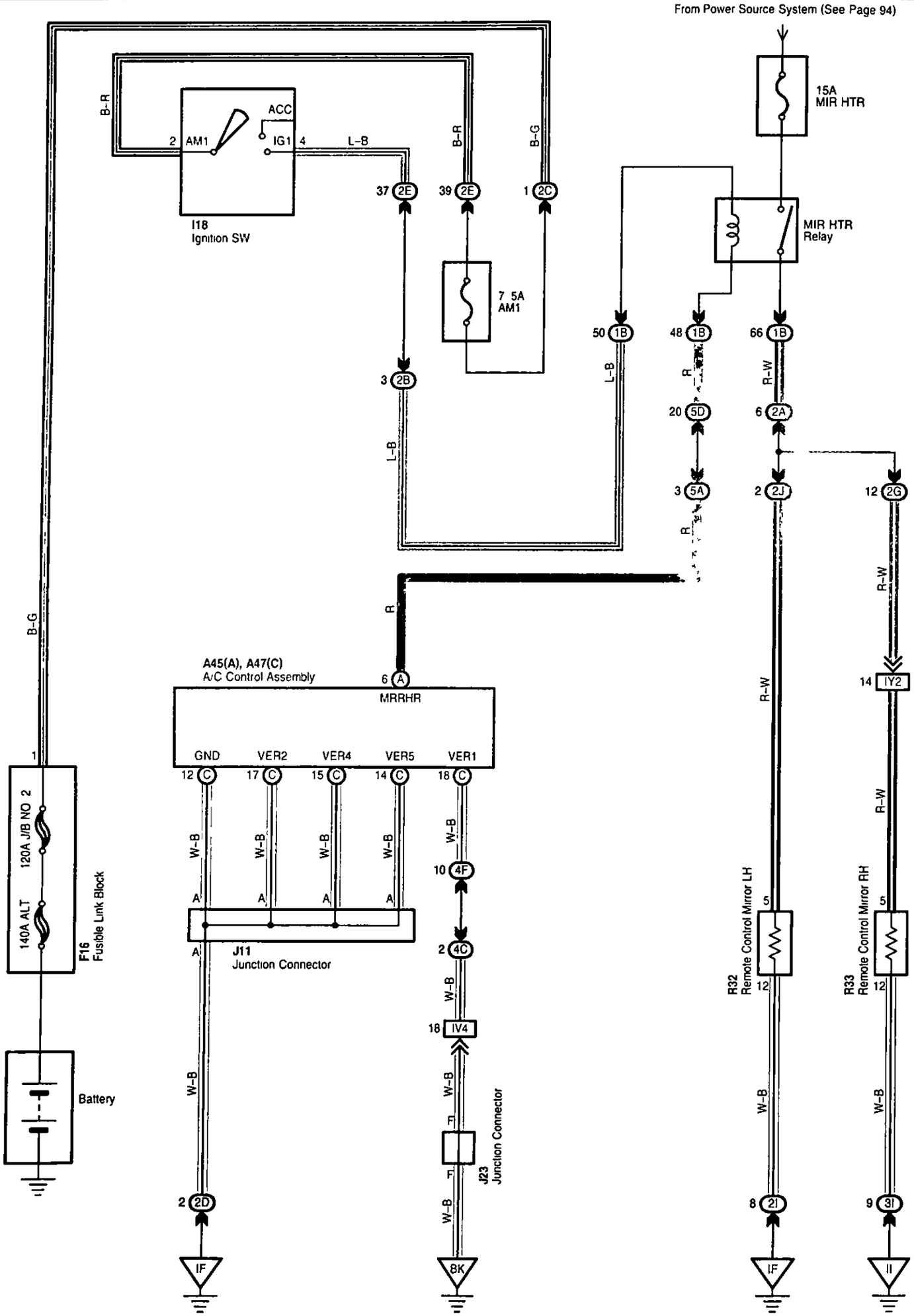

Service Hints

A45 (A), A47 (C) A/C Control Assembly

(A) 6-Ground : Approx. 12 volts with ignition SW at ON or ST position

(C) 12, (C) 14, (C) 15, (C) 17, (C) 18-Ground : Always continuity

○ : Parts Location

Code		See Page	Code	See Page	Code	See Page
A45	A	70	I18	70	R32	73
A47	C	70	J11	71	R33	73
F16		68	J23	72		

⬭ : Junction Block and Wire Harness Connector

Code	See Page	Junction Block and Wire Harness (Connector Location)
1B	24	Engine Room No 2 Wire and Engine Room J/B (Engine Compartment Left)
2A	28	Engine Room No 2 Wire and Cowl Side J/B LH (Left Kick Panel)
2B		
2C		
2D	28	Dash Wire and Cowl Side J/B LH (Left Kick Panel)
2E		
2G		
2I	28	Front Door LH Wire and Cowl Side J/B LH (Left Kick Panel)
2J		
3I	40	Front Door RH Wire and Cowl Side J/B RH (Right Kick Panel)
4C	52	Dash Wire and J/B No 4 (Instrument Panel Center)
4F		
5A	56	Dash Wire and J/B No 5 (Behind the Combination Meter)
5D	56	Engine Room No 2 Wire and J/B No 5 (Behind the Combination Meter)

□ : Connector Joining Wire Harness and Wire Harness

Code	See Page	Joining Wire Harness and Wire Harness (Connector Location)
IV4	82	Dash Wire and Floor No 2 Wire (Right Kick Panel)
IY2	82	Front Door RH Wire and Dash Wire (Right Kick Panel)

▽ : Ground Points

Code	See Page	Ground Points Location
IF	78	Set Bolt of Cowl Side J/B LH
II	78	Set Bolt of Cowl Side J/B RH
BK	86	Front Side Under the Front Passenger's Seat

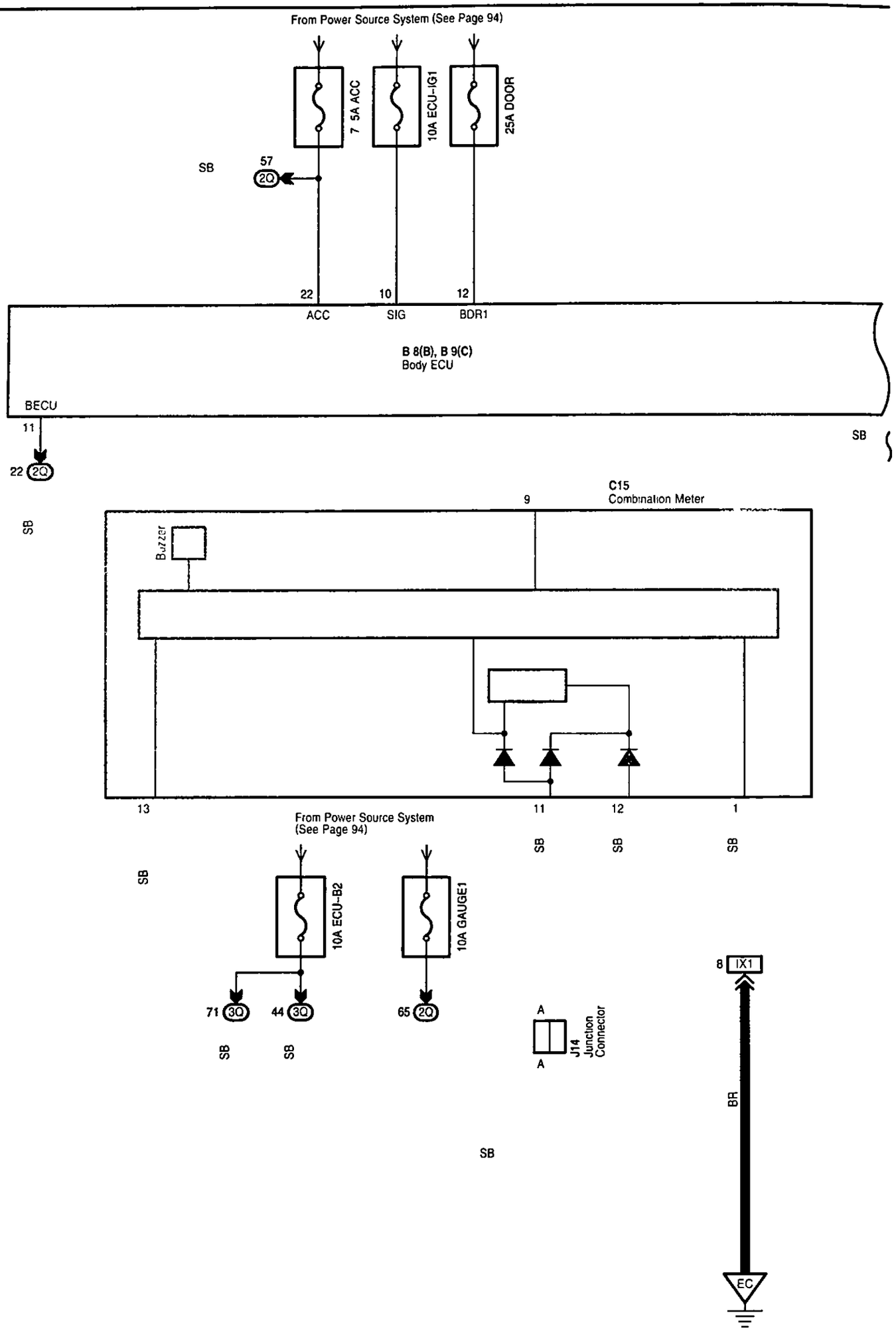
From Power Source System (See Page 94)
7 5A ACC
10A ECU-IG1
25A DOOR
SB
57
2Q
22
10
12
ACC
SIG
BDR1
B 8(B), B 9(C)
Body ECU
BECU
11
22 2Q
SB
C15
Combination Meter
9
SB
Buzzer
13
11
12
1
From Power Source System
(See Page 94)
SB
SB
SB
SB
10A ECU-B2
10A GAUGE1
71 3Q
44 3Q
65 2Q
SB
SB
A
A
J14
Junction
Connector
8 IX1
BR
SB
EC

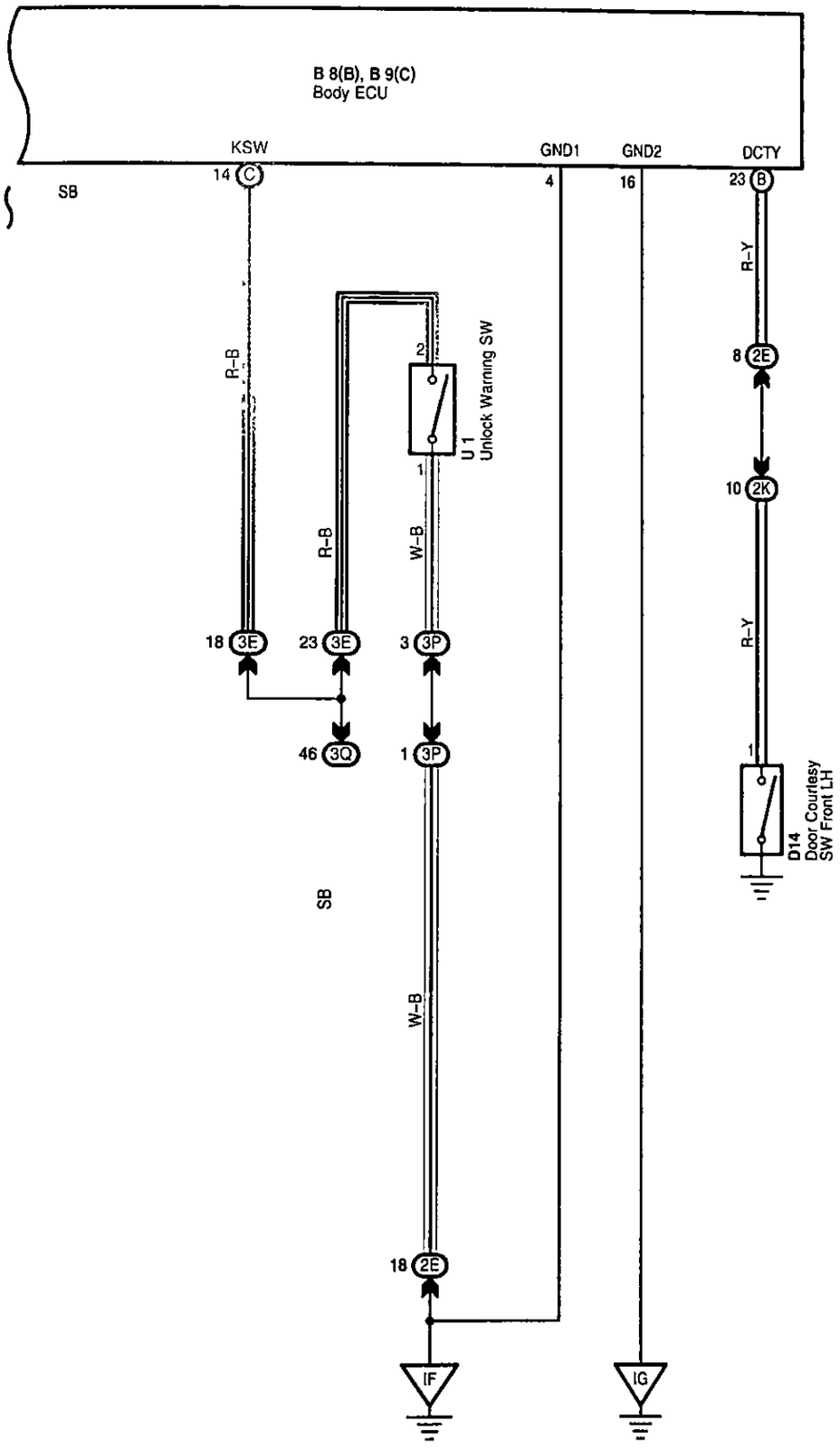
B 8(B), B 9(C)
Body ECU
KSW
GND1
GND2
DCTY
14 C
4
16
23 B
SB
R-Y
8 2E
10 2K
R-B
2
1
U1
Unlock Warning SW
R-B
W-B
18 3E
23 3E
3 3P
46 3Q
1 3P
1
D14
Door Courtesy
SW Front LH
SB
W-B
18 2E
IF
IG

Key Reminder

System Outline

When the driver door is opened with the ignition SW off and ignition key remaining in the key cylinder (Unlock warning SW on), a signal is input from the unlock warning SW to the combination meter TERMINAL 9, the body ECU TERMINAL (C) 14, and from the door courtesy SW front LH to the body ECU TERMINAL (B)23. As a result, the buzzer in the combination meter goes on and warns the driver that the key is remaining in the key cylinder.

Service Hints

D14 Door Courtesy SW Front LH

1-Ground : Closed with driver's door open

: Parts Location

Code		See Page	Code	See Page	Code	See Page
B8	B	70	C15	70	J14	71
B9	C	70	D14	72	U1	71

: Junction Block and Wire Harness Connector

Code	See Page	Junction Block and Wire Harness (Connector Location)
2E	28	Dash Wire and Cowl Side J/B LH (Left Kick Panel)
2K	28	Floor No 1 Wire and Cowl Side J/B LH (Left Kick Panel)
2Q	30	Instrument Panel Integration Wire and Cowl Side J/B LH (Left Kick Panel)
3E	40	Dash Wire and Cowl Side J/B RH (Right Kick Panel)
3P	43	
3Q	42	Instrument Panel Integration Wire and Cowl Side J/B RH (Right Kick Panel)

: Connector Joining Wire Harness and Wire Harness

Code	See Page	Joining Wire Harness and Wire Harness (Connector Location)
IX1	82	Instrument Panel Integration Wire and Engine Wire (Behind the Glove Box)

: Ground Points

Code	See Page	Ground Points Location
EC	76	Rear Bank of Right Cylinder Head
IF	78	Set Bolt of Cowl Side J/B LH
IG		

Seat Belt Warning

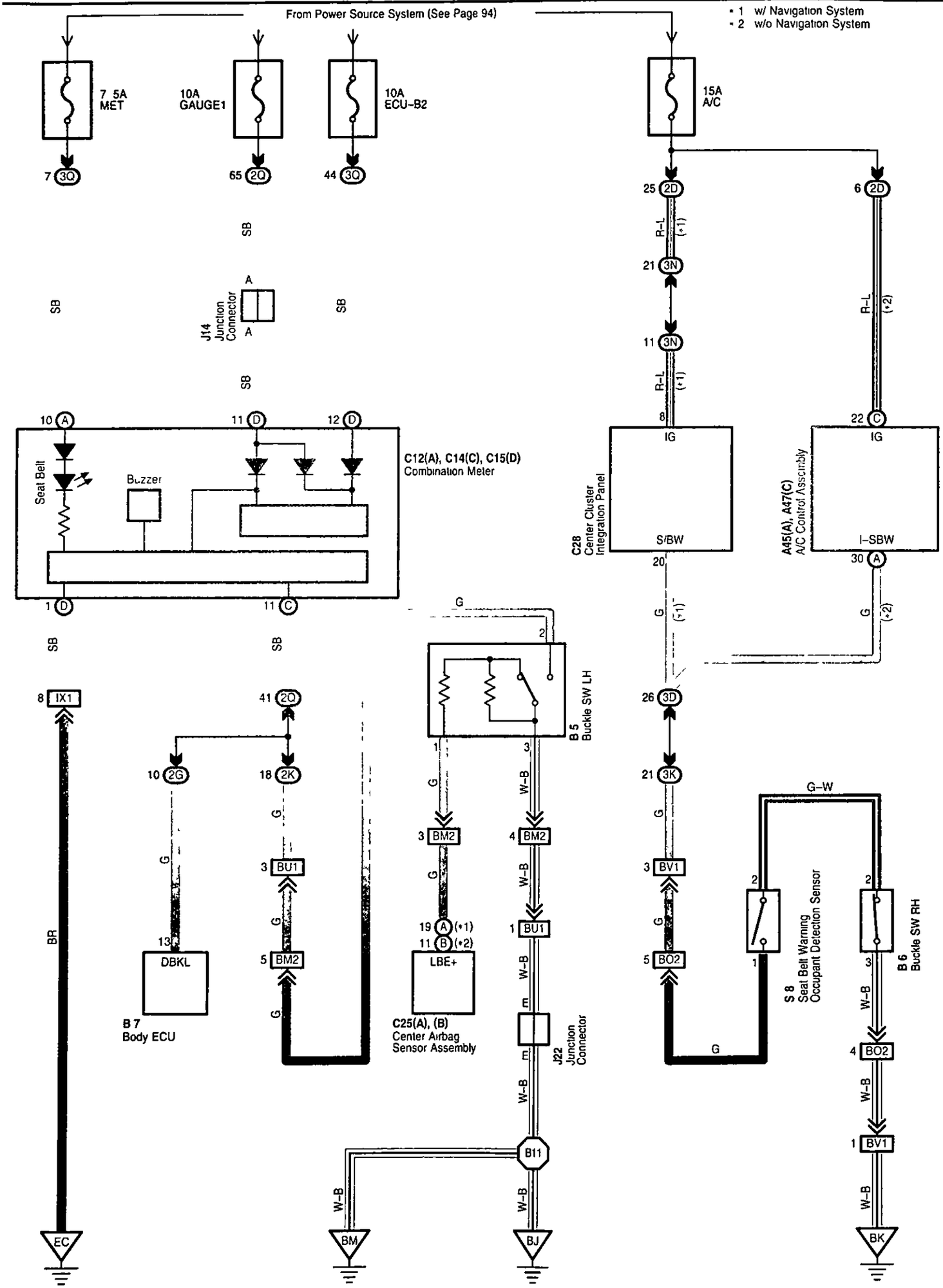

System Outline

When the ignition SW turned on, a signal is input to the combination meter and the center cluster integration panel (w/ navigation system) or the A/C control assembly (w/o navigation system). To determine whether the driver has fastened the seat belt, a signal is input from the buckle SW LH to the combination meter. When the seat belt is not fastened, the seat belt warning light in the combination meter blinks, and emits a warning sound.
In addition, the front passenger is recognized by a sensor (Seat belt warning occupant detection sensor) is installed in the front passenger seat, and determines whether the seat belt is fastened. When not fastened, the signals from the seat belt warning occupant detection sensor and the buckle SW RH is input to the center cluster integration panel (w/ navigation system) or the A/C control assembly (w/o navigation system), and the passenger seat belt warning light blinks to warn the passenger.

Service Hints

S8 Seat Belt Warning Occupant Detection Sensor
1-2 : Closed with passenger sit on the front passenger seat

: Parts Location

Code		See Page	Code		See Page	Code	See Page
A45	A	70	C12	A	70	C28	70
A47	C	70	C14	C	70	J14	71
B5		74	C15	D	70	J22	72
B6		74	C25	A	70	S8	74
B7		70		B	70		

: Junction Block and Wire Harness Connector

Code	See Page	Junction Block and Wire Harness (Connector Location)
2D 2G	28	Dash Wire and Cowl Side J/B LH (Left Kick Panel)
2K	28	Floor No 1 Wire and Cowl Side J/B LH (Left Kick Panel)
2Q	30	Instrument Panel Integration Wire and Cowl Side J/B LH (Left Kick Panel)
3D	40	Dash Wire and Cowl Side J/B RH (Right Kick Panel)
3K	40	Floor No 2 Wire and Cowl Side J/B RH (Right Kick Panel)
3N	43	Dash Wire and Cowl Side J/B RH (Right Kick Panel)
3Q	42	Instrument Panel Integration Wire and Cowl Side J/B RH (Right Kick Panel)

: Connector Joining Wire Harness and Wire Harness

Code	See Page	Joining Wire Harness and Wire Harness (Connector Location)
IX1	82	Instrument Panel Integration Wire and Engine Wire (Behind the Glove Box)
BM2	90	Floor No.1 Wire and Front Seat LH Wire (Front Side Under the Driver's Seat)
BO2	90	Floor No.2 Wire and Front Seat RH Wire (Front Side Under the Front Passenger's Seat)
BU1	88	Floor No.1 Wire and Floor No 1 Wire (Near the Left Rear Suspension Support)
BV1	88	Floor No.2 Wire and Floor No 2 Wire (Near the Right Rear Suspension Support)

: Ground Points

Code	See Page	Ground Points Location
EC	76	Rear Bank of Right Cylinder Head
BJ	86	Under the Driver's Seat
BK	86	Front Side Under the Front Passenger's Seat
BM	86	Left Rear Side Quarter Panel

: Splice Points

Code	See Page	Wire Harness with Splice Points	Code	See Page	Wire Harness with Splice Points
B11	88	Floor No.1 Wire			

Auto Antenna

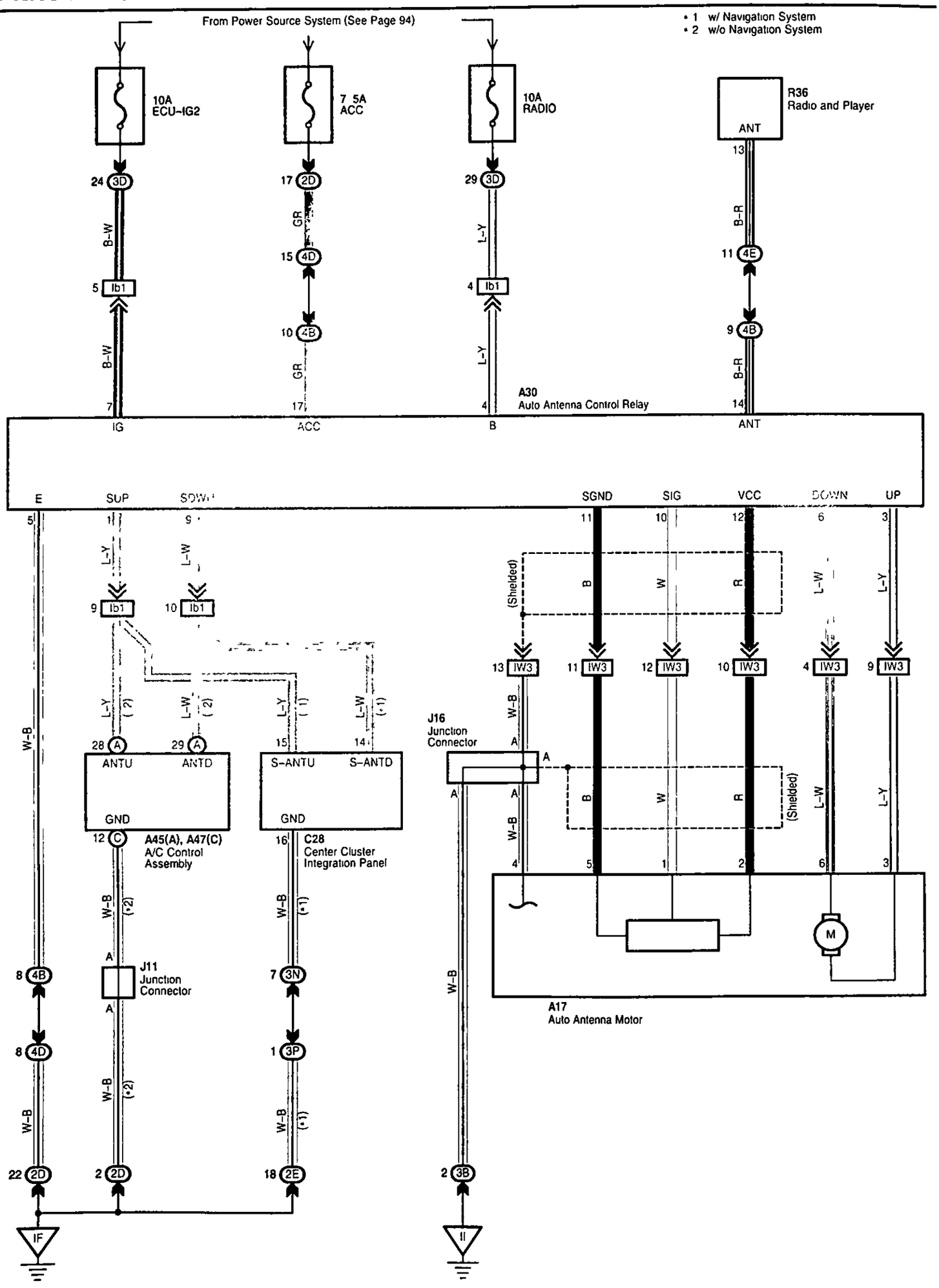

Service Hints

A30 Auto Antenna Control Relay

4-Ground : Always approx. 12 volts
17-Ground : Approx. 12 volts with ignition SW at ACC or ON position
7-Ground : Approx. 12 volts with ignition SW at ON or ST position
5-Ground : Always continuity

○ : Parts Location

Code	See Page	Code	See Page	Code	See Page
A17	68	A47 C	70	J16	71
A30	70	C28	70	R36	71
A45 A	70	J11	71		

⬭ : Junction Block and Wire Harness Connector

Code	See Page	Junction Block and Wire Harness (Connector Location)
2D	28	Dash Wire and Cowl Side J/B LH (Left Kick Panel)
2E		
3B	40	Engine Room No 2 Wire and Cowl Side J/B RH (Right Kick Panel)
3D	40	Dash Wire and Cowl Side J/B RH (Right Kick Panel)
3N	43	
3P		
4B	52	Dash Wire and J/B No 4 (Instrument Panel Center)
4D		
4E		

□ : Connector Joining Wire Harness and Wire Harness

Code	See Page	Joining Wire Harness and Wire Harness (Connector Location)
IW3	82	Engine Room No 2 Wire and Dash Wire (Behind the Glove Box)
Ib1	84	Dash Wire and Dash Wire (Behind the Combination Meter)

▽ : Ground Points

Code	See Page	Ground Points Location
IF	78	Set Bolt of Cowl Side J/B LH
II	78	Set Bolt of Cowl Side J/B RH

Radio and Player (w/ Navigation System)

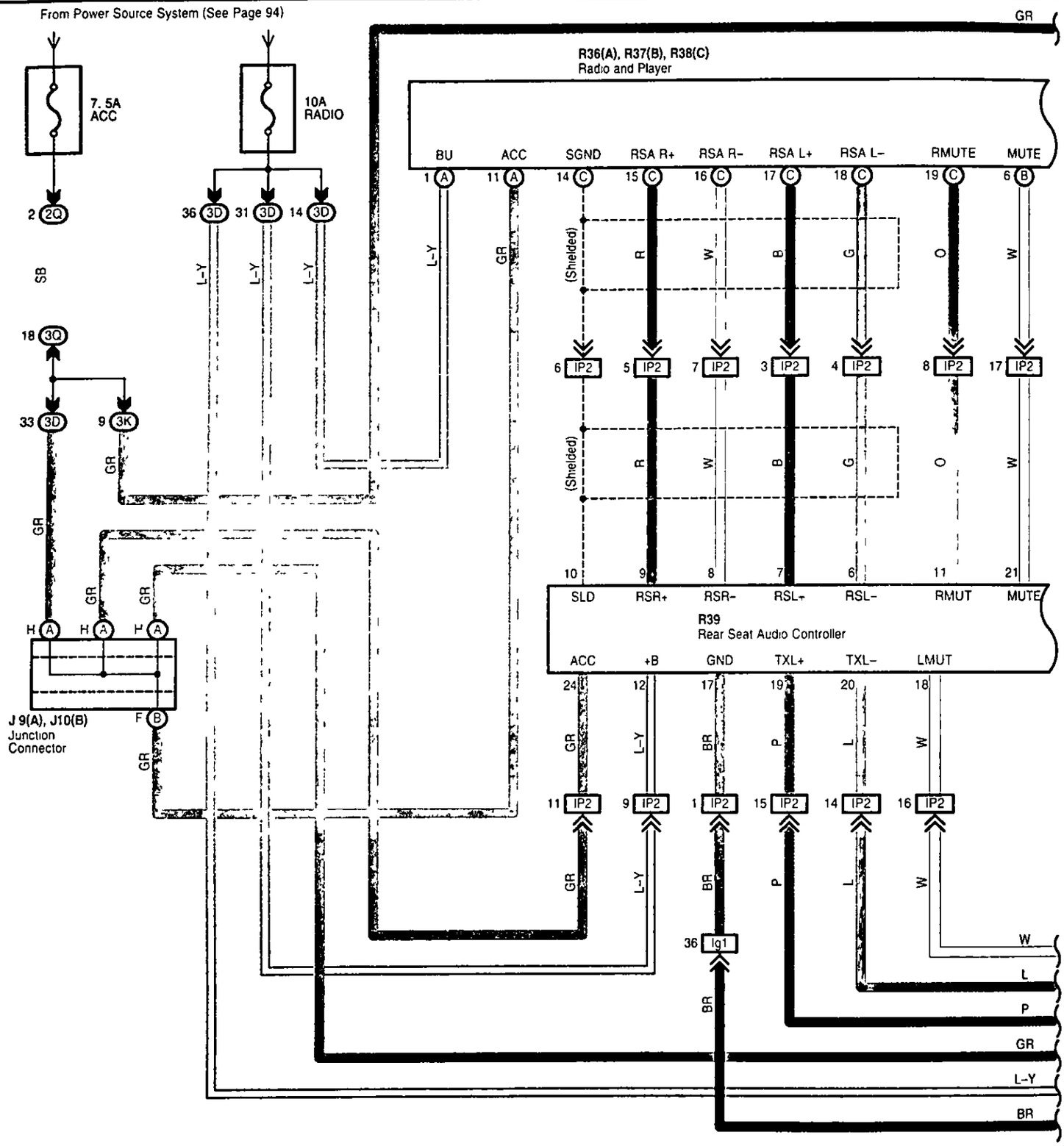

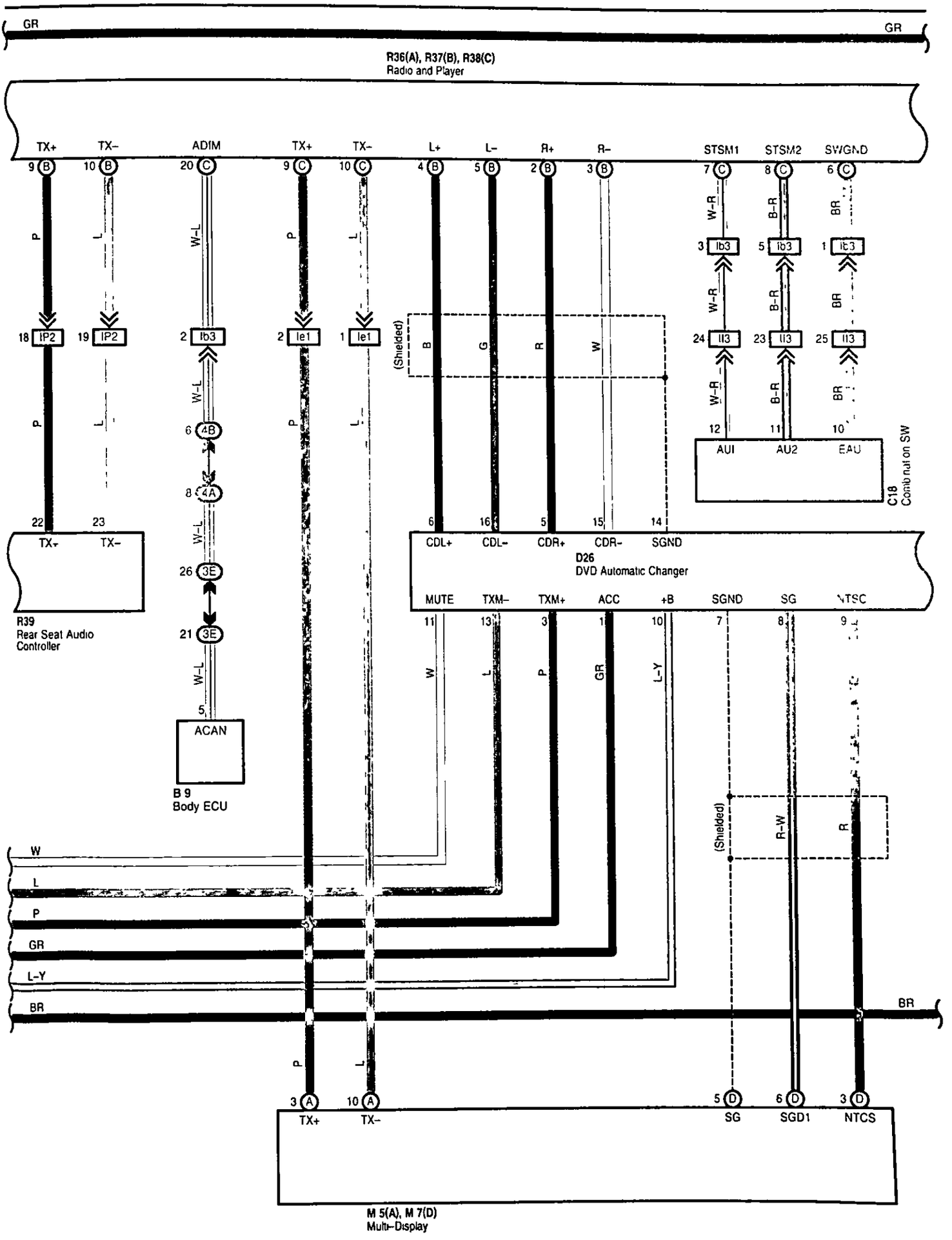
GR
GR
R36(A), R37(B), R38(C)
Radio and Player
TX+
TX−
ADIM
TX+
TX−
L+
L−
R+
R−
STSM1
STSM2
SWGND
CDL+
CDL−
CDR+
CDR−
SGND
D26
DVD Automatic Changer
MUTE
TXM−
TXM+
ACC
+B
SGND
SG
NTSC
R39
Rear Seat Audio Controller
B 9
Body ECU
ACAN
AUI
AU2
EAU
C18
Combination SW
(Shielded)
W
L
P
GR
L-Y
BR
R-W
R
M 5(A), M 7(D)
Multi-Display
SG
SGD1
NTCS

Radio and Player (w/ Navigation System)

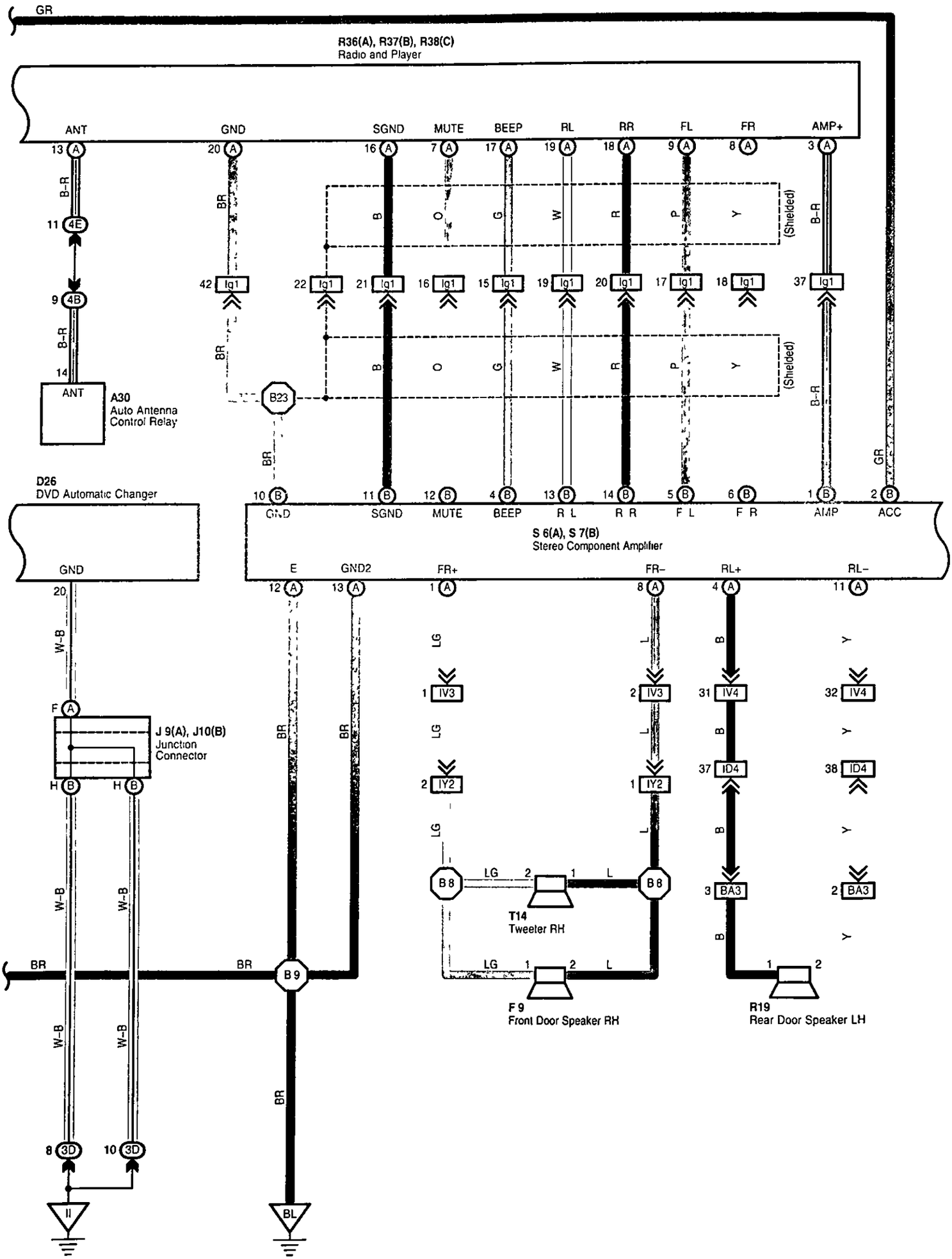

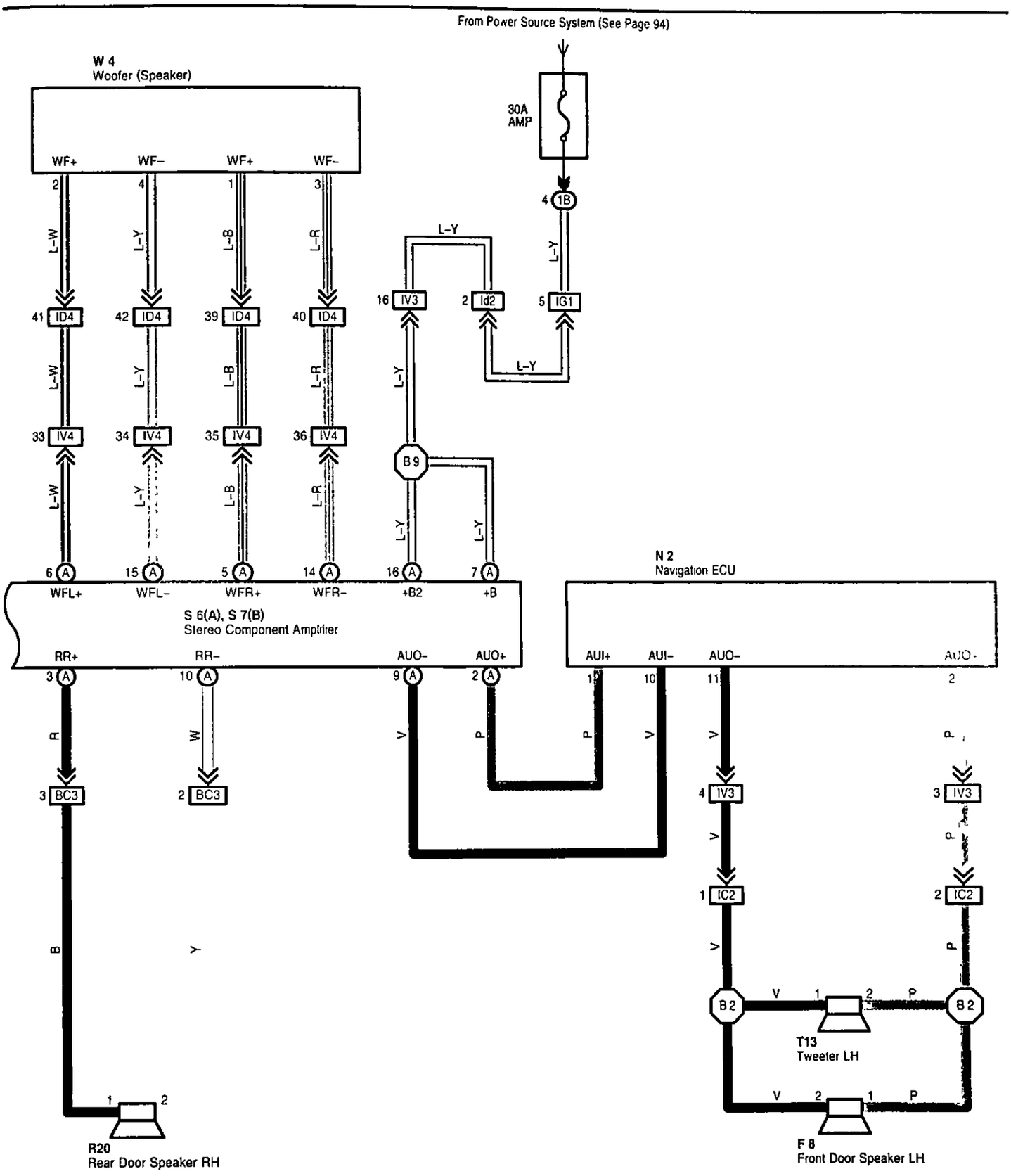
From Power Source System (See Page 94)
W 4
Woofer (Speaker)
WF+
WF−
WF+
WF−
30A
AMP
4 1B
L-Y
16 IV3
2 Id2
5 IG1
L-Y
L-Y
L-W
L-Y
L-B
L-R
41 ID4
42 ID4
39 ID4
40 ID4
33 IV4
34 IV4
35 IV4
36 IV4
B 9
6 A
15 A
5 A
14 A
16 A
7 A
WFL+
WFL−
WFR+
WFR−
+B2
+B
S 6(A), S 7(B)
Stereo Component Amplifier
N 2
Navigation ECU
RR+
RR−
AUO−
AUO+
AUI+
AUI−
AUO−
AUO-
3 A
10 A
9 A
2 A
1
10
11
2
R
W
V
P
P
V
V
P
3 BC3
2 BC3
4 IV3
3 IV3
B
Y
V
P
1 IC2
2 IC2
V
P
B 2
V
1
2
P
B 2
T13
Tweeter LH
V
2
1
P
1
2
R20
Rear Door Speaker RH
F 8
Front Door Speaker LH

Radio and Player (w/ Navigation System)

Service Hints

R36 Radio and Player

1-Ground : Always approx. 12 volts
11-Ground : Approx. 12 volts with ignition SW at ACC or ON position

S6 (A), S7 (B) Stereo Component Amplifier

(A) 7, (A) 16-Ground : Always approx. 12 volts
(B) 2-Ground : Approx. 12 volts with ignition SW at ACC or ON position
(A) 12, (A) 13-Ground : Always continuity

○ : Parts Location

Code	See Page	Code	See Page	Code	See Page
A30	70	M5 A	71	R39	71
B9	70	M7 D	71	S6 A	73
C18	70	N2	72	S7 B	73
D26	70	R19	73	T13	73
F8	72	R20	73	T14	73
F9	72	R36 A	71	W4	73
J9 A	71	R37 B	71		
J10 B	71	R38 C	71		

⬭ : Junction Block and Wire Harness Connector

Code	See Page	Junction Block and Wire Harness (Connector Location)
1B	24	Engine Room No 2 Wire and Engine Room J/B (Engine Compartment Left)
2Q	30	Instrument Panel Integration Wire and Cowl Side J/B LH (Left Kick Panel)
3D	40	Dash Wire and Cowl Side J/B RH (Right Kick Panel)
3E		
3K	40	Floor No 2 Wire and Cowl Side J/B RH (Right Kick Panel)
3Q	42	Instrument Panel Integration Wire and Cowl Side J/B RH (Right Kick Panel)
4A	52	Dash Wire and J/B No 4 (Instrument Panel Center)
4B		
4E		

▭ : Connector Joining Wire Harness and Wire Harness

Code	See Page	Joining Wire Harness and Wire Harness (Connector Location)
IC2	78	Front Door LH Wire and Dash Wire (Left Kick Panel)
ID4	78	Dash Wire and Floor No 1 Wire (Left Kick Panel)
IG1	78	Engine Room No.2 Wire and Dash Wire (Behind the Combination Meter)
II3	80	Dash Wire and Column Wire (Near the Ignition SW)
IP2	80	Rear Console Box Wire and Dash Wire (Right Side of Rear Console)
IV3	82	Dash Wire and Floor No.2 Wire (Right Kick Panel)
IV4		
IY2	82	Front Door RH Wire and Dash Wire (Right Kick Panel)
Ib3	84	Dash Wire and Dash Wire (Behind the Combination Meter)
Id2	84	Dash Wire and Dash Wire (Instrument Panel Center)
Ie1	84	Dash Wire and Dash Wire (Behind the Glove Box)
Ig1	84	Dash Wire and Floor No 2 Wire (Right Side of Front Console)
BA3	86	Rear Door LH Wire and Floor No.1 Wire (Left Side of Center Pillar)
BC3	86	Rear Door RH Wire and Floor No.2 Wire (Right Side of Center Pillar)

▽ : Ground Points

Code	See Page	Ground Points Location
II	78	Set Bolt of Cowl Side J/B RH
BL	86	Rear Side Under the Front Passenger's Seat

: Splice Points

Code	See Page	Wire Harness with Splice Points	Code	See Page	Wire Harness with Splice Points
B2	88	Front Door LH Wire	B9	88	Floor No 2 Wire
B8	88	Front Door RH Wire	B23		

Radio and Player (w/o Navigation System)

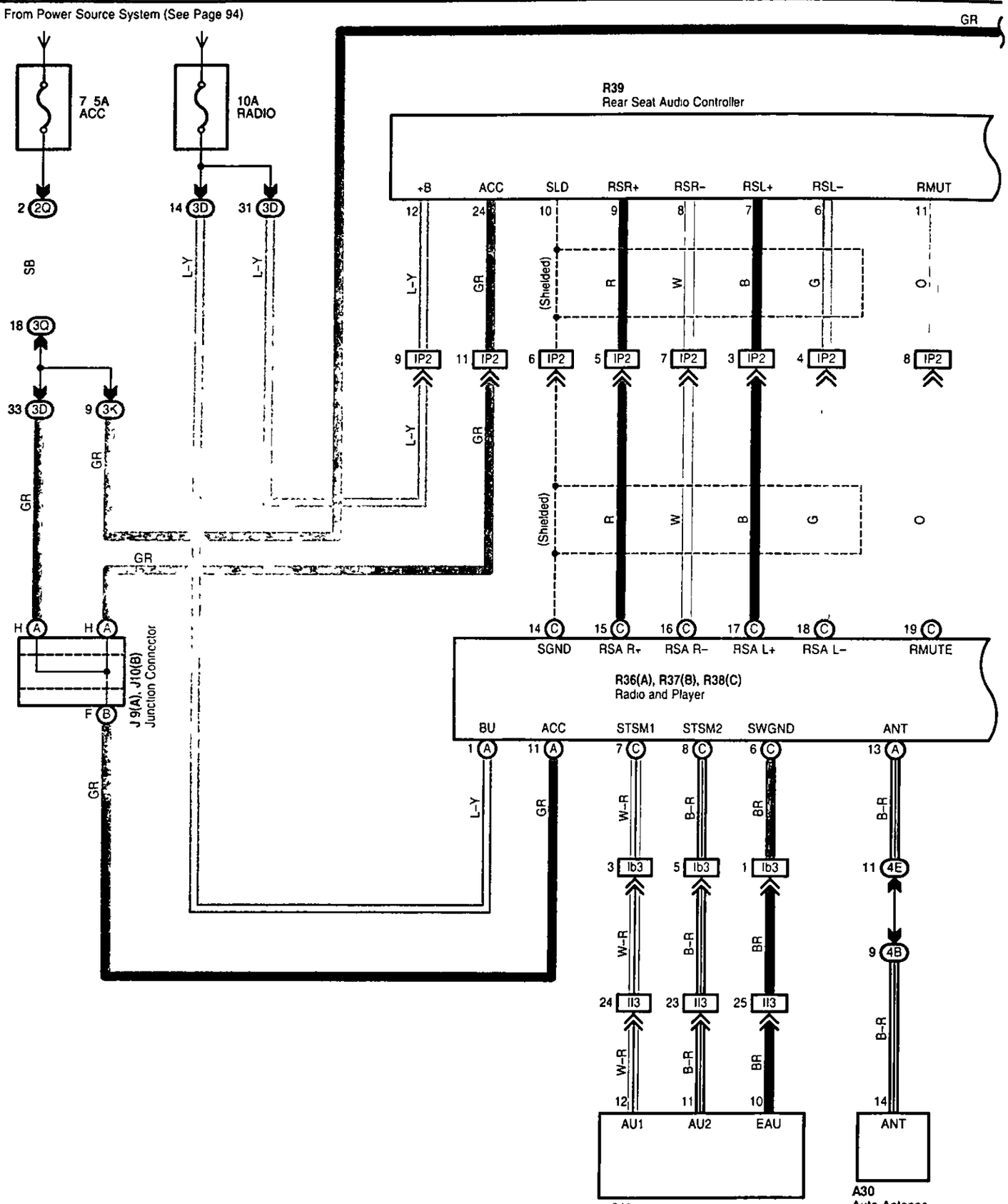

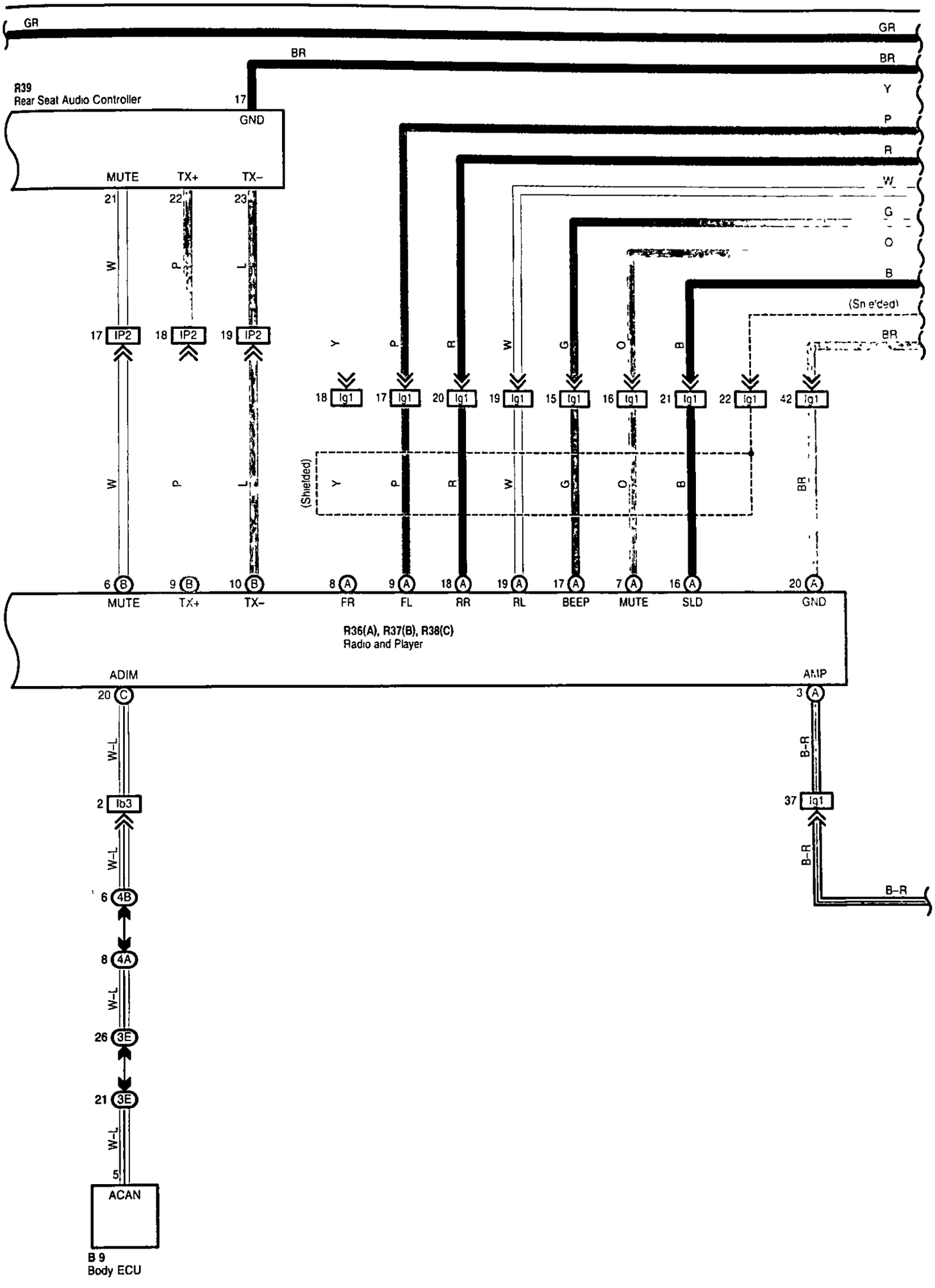
GR
GR
BR
BR
R39
Rear Seat Audio Controller
17
GND
Y
P
R
W
G
O
B
(Sn e'ded)
BR
MUTE
TX+
TX–
21
22
23
W
P
L
17 IP2
18 IP2
19 IP2
Y
P
R
W
G
O
B
18 lg1
17 lg1
20 lg1
19 lg1
15 lg1
16 lg1
21 lg1
22 lg1
42 lg1
(Shielded)
Y
P
R
W
G
O
B
BR
6 B
9 B
10 B
8 A
9 A
18 A
19 A
17 A
7 A
16 A
20 A
MUTE
TX+
TX–
FR
FL
RR
RL
BEEP
MUTE
SLD
GND
R36(A), R37(B), R38(C)
Radio and Player
ADIM
AMP
20 C
3 A
W–L
B–R
2 lb3
37 lg1
W–L
B–R
6 4B
B–R
8 4A
W–L
26 3E
21 3E
W–L
5
ACAN
B 9
Body ECU

Radio and Player (w/o Navigation System)

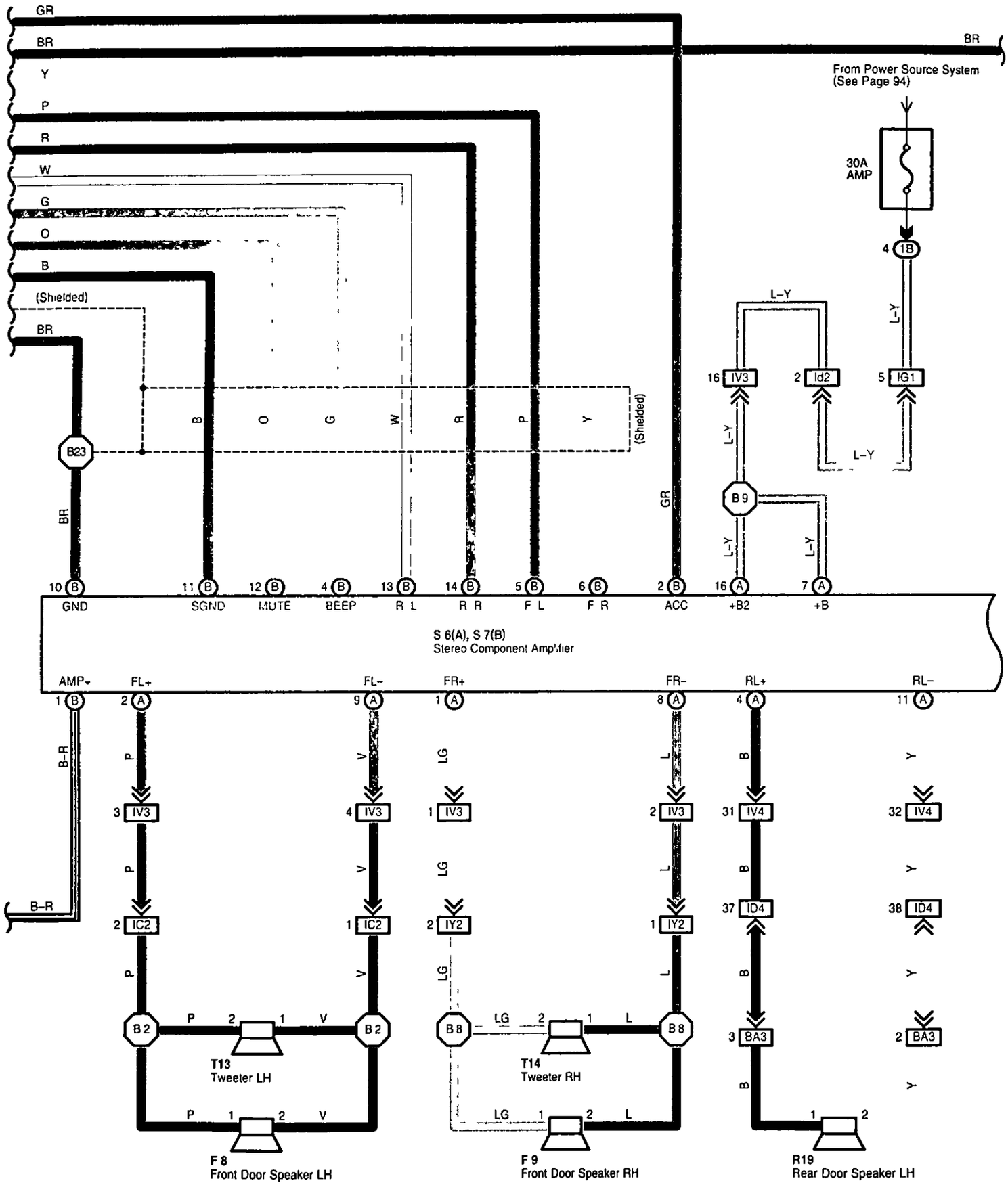

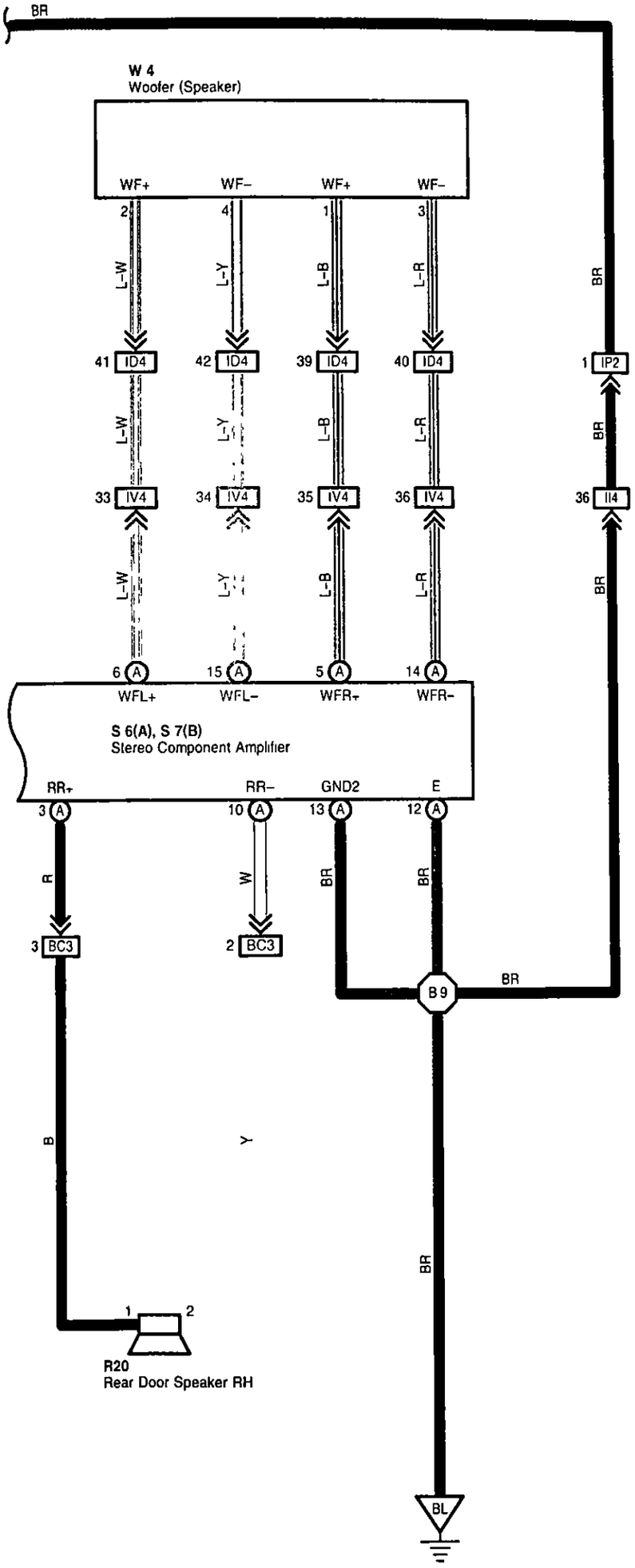
BR
W 4
Woofer (Speaker)
WF+
WF−
WF+
WF−
2
4
1
3
L-W
L-Y
L-B
L-R
41 ID4
42 ID4
39 ID4
40 ID4
33 IV4
34 IV4
35 IV4
36 IV4
6 A
15 A
5 A
14 A
WFL+
WFL−
WFR+
WFR−
S 6(A), S 7(B)
Stereo Component Amplifier
RR+
RR−
GND2
E
3 A
10 A
13 A
12 A
R
W
BR
BR
3 BC3
2 BC3
B9
BR
B
Y
BR
1
2
R20
Rear Door Speaker RH
BL
1 IP2
BR
36 II4
BR

Radio and Player (w/o Navigation System)

Service Hints

R36 Radio and Player

1-Ground : Always approx. 12 volts

11-Ground : Approx. 12 volts with ignition SW at ACC or ON position

S6 (A), S7 (B) Stereo Component Amplifier

(A) 7, (A) 16-Ground : Always approx. 12 volts

(B) 2-Ground : Approx. 12 volts with ignition SW at ACC or ON position

(A) 12, (A) 13-Ground : Always continuity

○ : Parts Location

Code	See Page	Code	See Page	Code	See Page
A30	70	J10 B	71	R39	71
B9	70	R19	73	S6 A	73
C18	70	R20	73	S7 B	73
F8	72	R36 A	71	T13	73
F9	72	R37 B	71	T14	73
J9 A	71	R38 C	71	W4	73

⬭ : Junction Block and Wire Harness Connector

Code	See Page	Junction Block and Wire Harness (Connector Location)
1B	24	Engine Room No 2 Wire and Engine Room J/B (Engine Compartment Left)
2Q	30	Instrument Panel Integration Wire and Cowl Side J/B LH (Left Kick Panel)
3D	40	Dash Wire and Cowl Side J/B RH (Right Kick Panel)
3E		
3K	40	Floor No 2 Wire and Cowl Side J/B RH (Right Kick Panel)
3Q	42	Instrument Panel Integration Wire and Cowl Side J/B RH (Right Kick Panel)
4A	52	Dash Wire and J/B No.4 (Instrument Panel Center)
4B		
4E		

▭ : Connector Joining Wire Harness and Wire Harness

Code	See Page	Joining Wire Harness and Wire Harness (Connector Location)
IC2	78	Front Door LH Wire and Dash Wire (Left Kick Panel)
ID4	78	Dash Wire and Floor No 1 Wire (Left Kick Panel)
IG1	78	Engine Room No.2 Wire and Dash Wire (Behind the Combination Meter)
II3	80	Dash Wire and Column Wire (Near the Ignition SW)
II4		
IP2	80	Rear Console Box Wire and Dash Wire (Right Side of Rear Console)
IV3	82	Dash Wire and Floor No 2 Wire (Right Kick Panel)
IV4		
IY2	82	Front Door RH Wire and Dash Wire (Right Kick Panel)
Ib3	84	Dash Wire and Dash Wire (Behind the Combination Meter)
Id2	84	Dash Wire and Dash Wire (Instrument Panel Center)
Ig1	84	Dash Wire and Floor No.2 Wire (Right Side of Front Console)
BA3	86	Rear Door LH Wire and Floor No.1 Wire (Left Side of Center Pillar)
BC3	86	Rear Door RH Wire and Floor No.2 Wire (Right Side of Center Pillar)

▽ : Ground Points

Code	See Page	Ground Points Location
BL	86	Rear Side Under the Front Passenger's Seat

: Splice Points

Code	See Page	Wire Harness with Splice Points	Code	See Page	Wire Harness with Splice Points
B2	88	Front Door LH Wire	B9	88	Floor No.2 Wire
B8	88	Front Door RH Wire	B23		

Navigation System

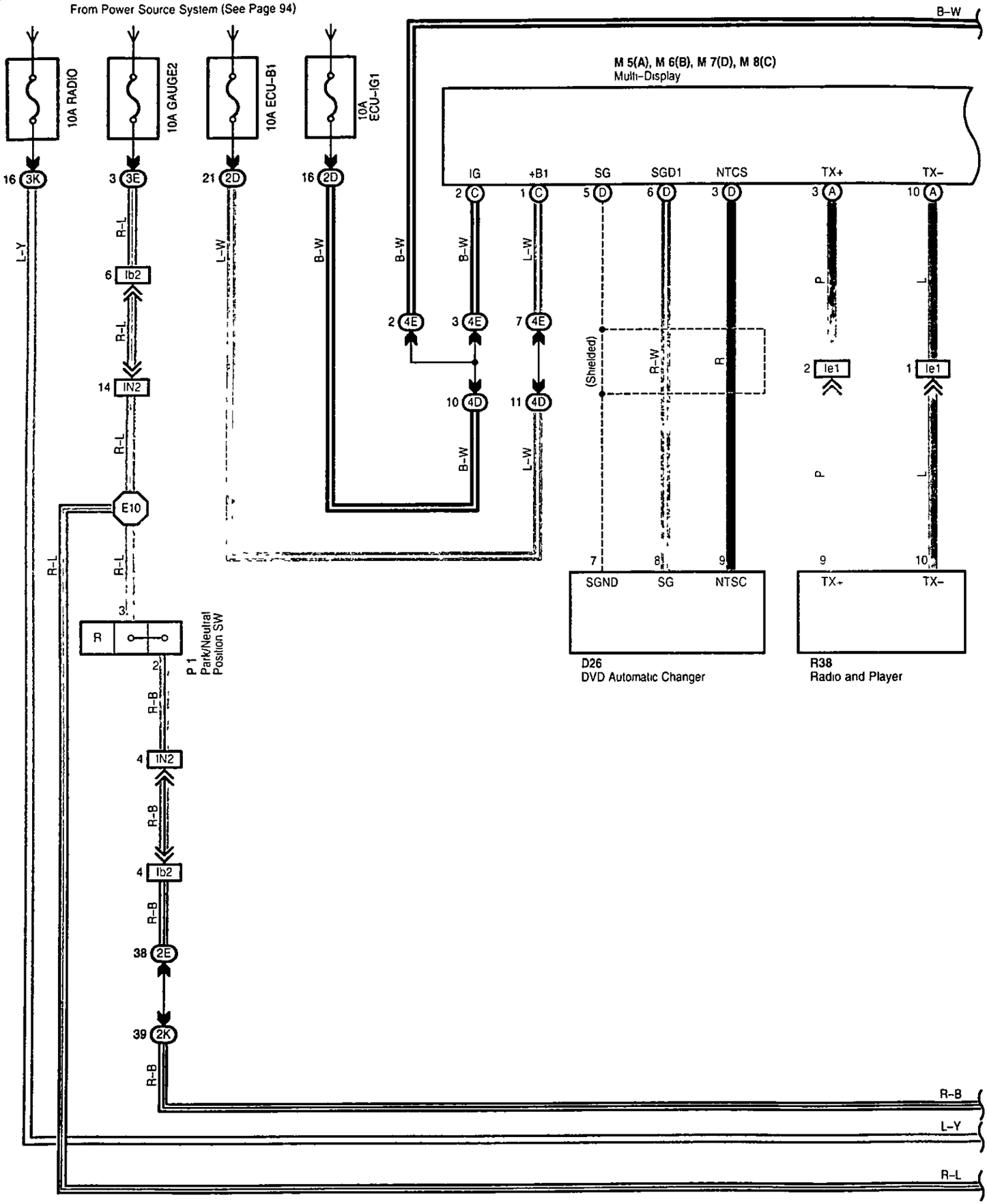

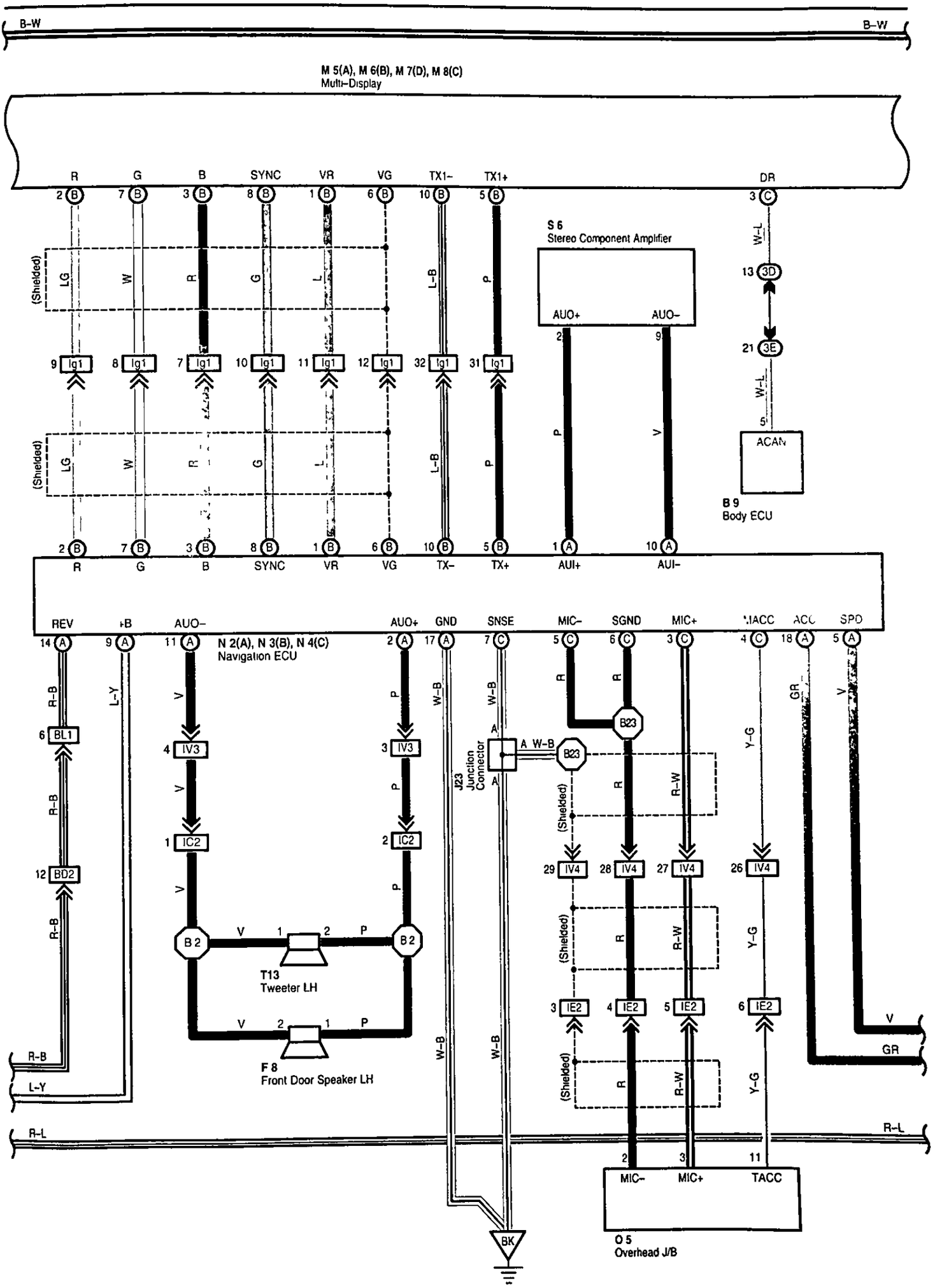
B-W
B-W
M 5(A), M 6(B), M 7(D), M 8(C)
Multi-Display
R
G
B
SYNC
VR
VG
TX1-
TX1+
DR
(Shielded)
LG
W
R
G
L
L-B
P
S 6
Stereo Component Amplifier
AUO+
AUO-
W-L
3D
3E
ACAN
B 9
Body ECU
TX-
AUI+
AUI-
REV
+B
GND
SNSE
MIC-
SGND
MIC+
TACC
ACC
SPD
N 2(A), N 3(B), N 4(C)
Navigation ECU
BL1
BD2
IV3
IC2
B2
T13
Tweeter LH
F 8
Front Door Speaker LH
J23
Junction
Connector
B23
IV4
IE2
R-B
L-Y
V
P
W-B
R-W
Y-G
GR
R-L
BK
O 5
Overhead J/B

Navigation System

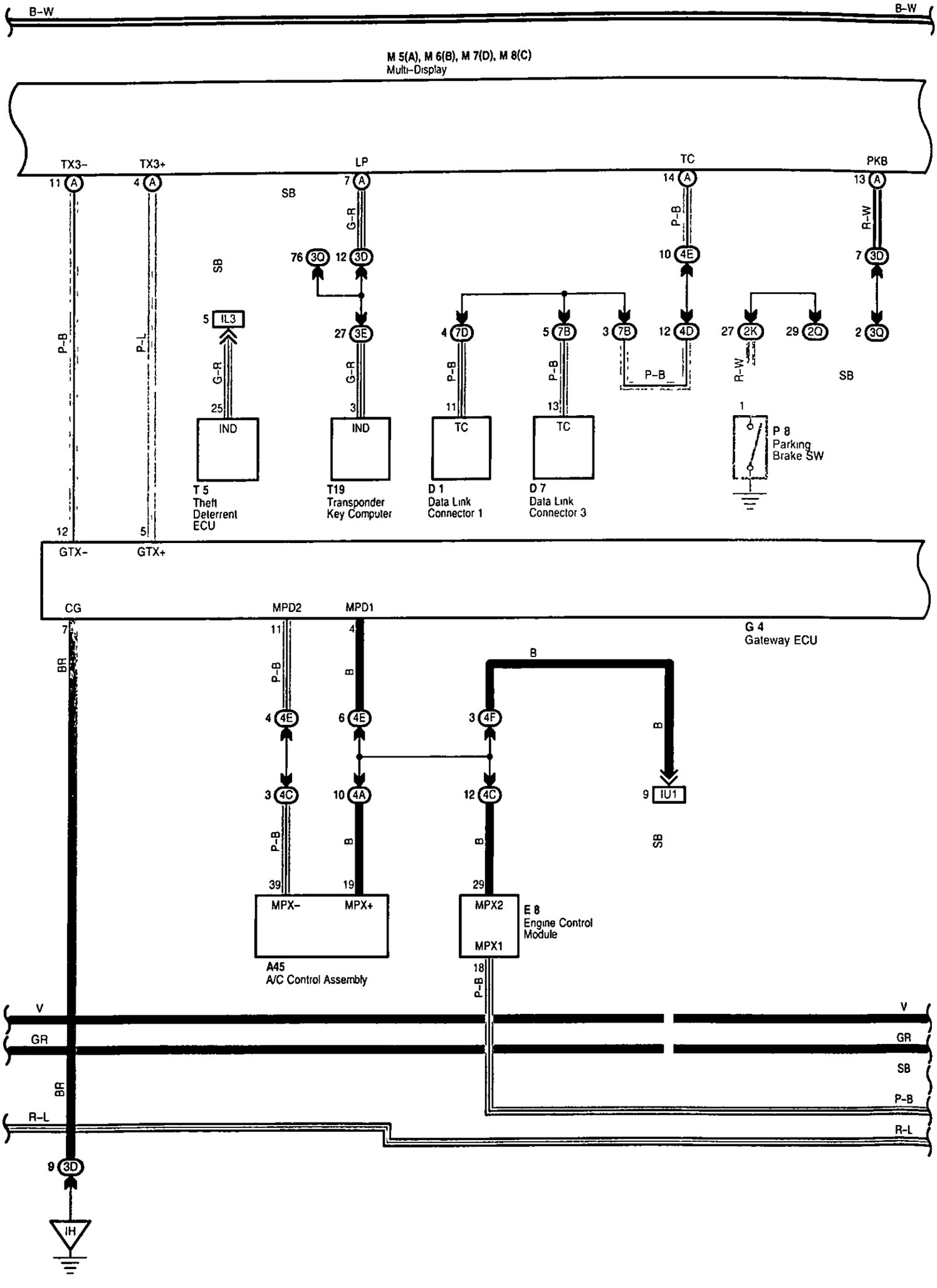

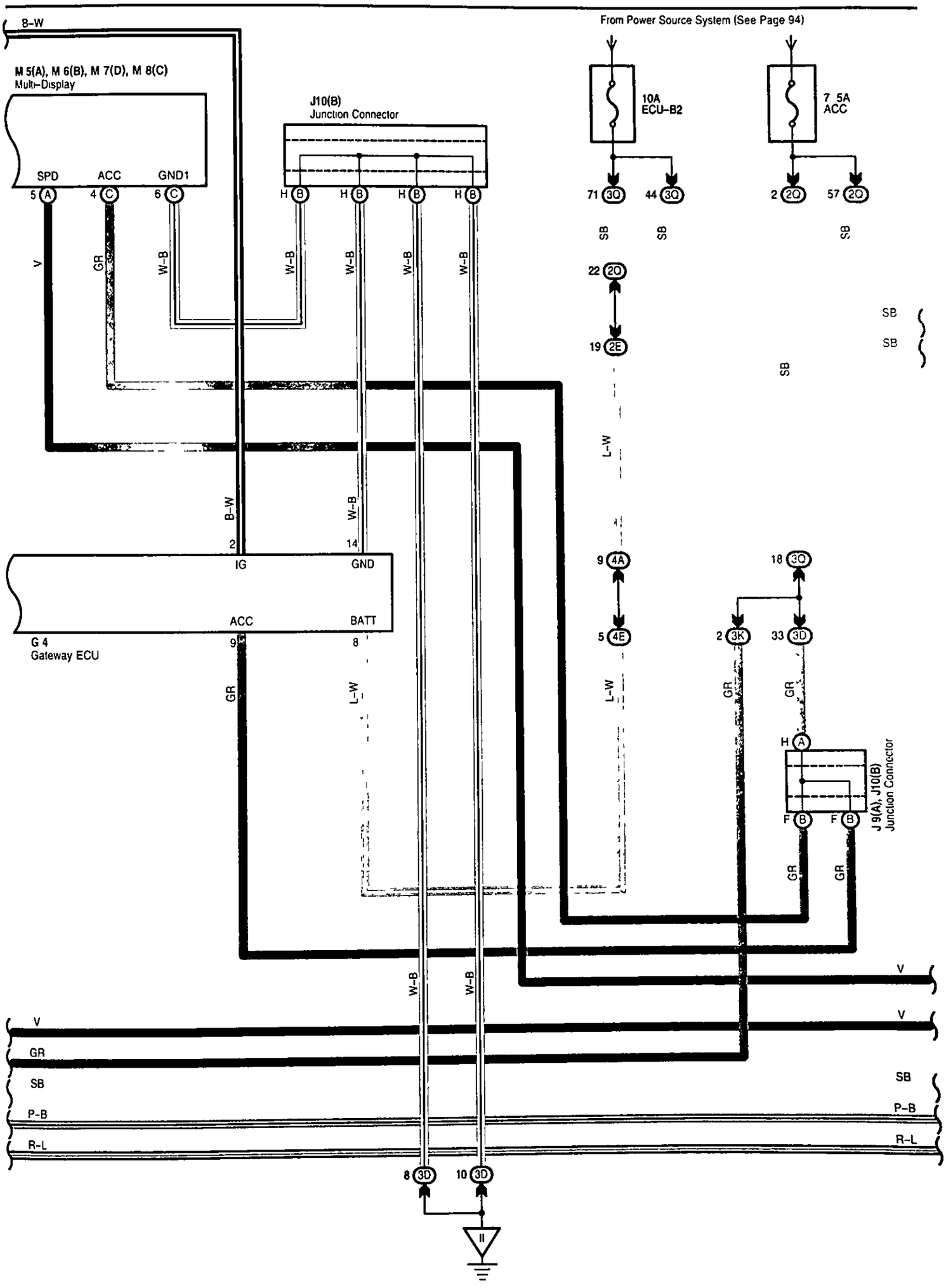
From Power Source System (See Page 94)
B-W
M 5(A), M 6(B), M 7(D), M 8(C)
Multi-Display
SPD
ACC
GND1
5 A
4 C
6 C
J10(B)
Junction Connector
H B
10A
ECU-B2
7 5A
ACC
71 3Q
44 3Q
2 2Q
57 2Q
SB
22 2O
19 2E
L-W
V
GR
W-B
B-W
2
14
IG
GND
ACC
BATT
G 4
Gateway ECU
9
8
9 4A
5 4E
18 3Q
2 3K
33 3D
H A
F B
J 9(A), J10(B)
Junction Connector
P-B
R-L
8 3D
10 3D
II

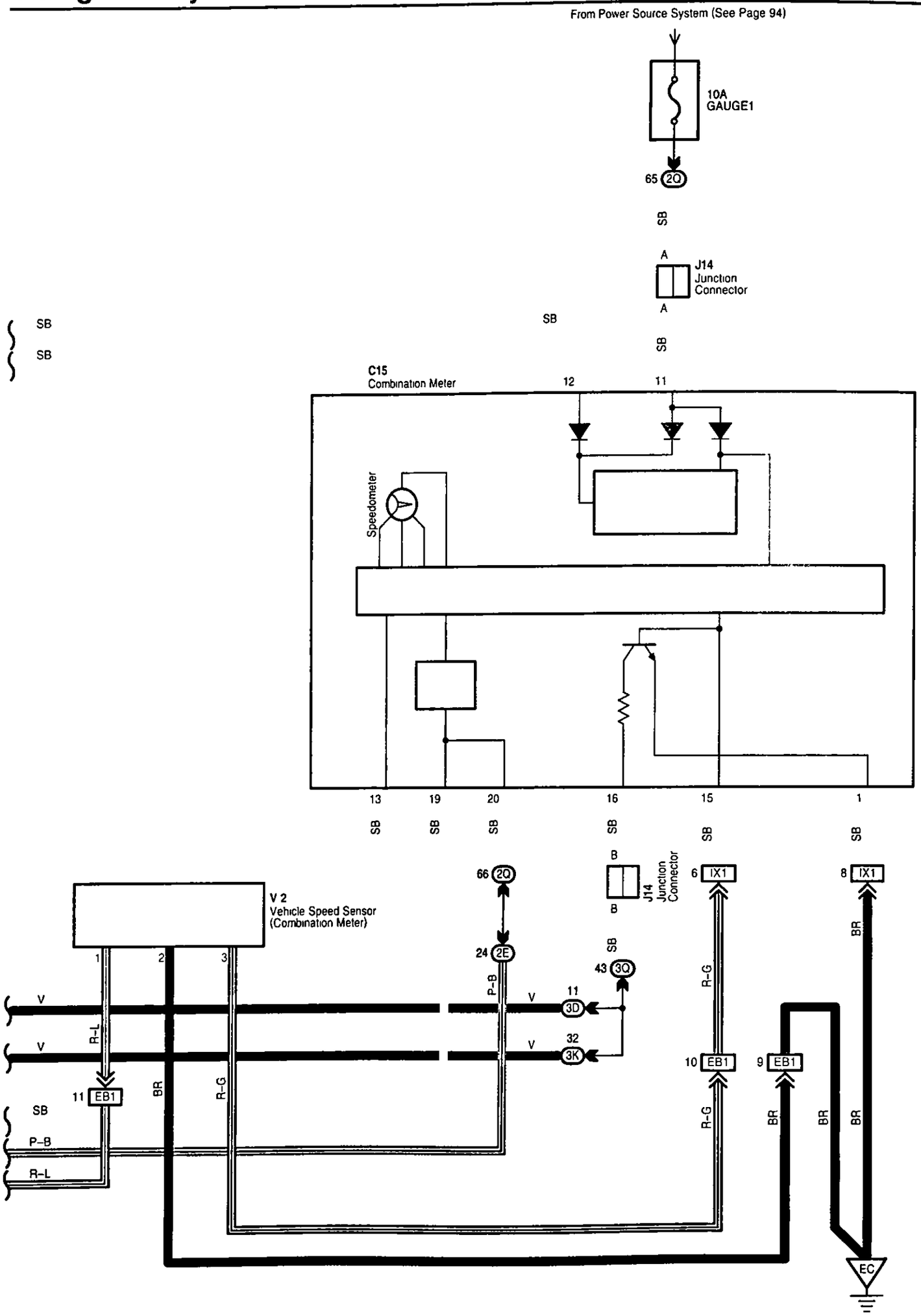
From Power Source System (See Page 94)
10A
GAUGE1
65 2Q
SB
A
J14
Junction
Connector
A
SB
SB
SB
SB
C15
Combination Meter
12
11
Speedometer
13
19
20
16
15
1
SB
SB
SB
SB
SB
SB
B
J14
Junction
Connector
B
66 2Q
6 IX1
8 IX1
V 2
Vehicle Speed Sensor
(Combination Meter)
1
2
3
24 2E
SB
43 3Q
P-B
V
V
11
3D
32
3K
R-G
BR
R-L
V
V
11 EB1
BR
R-G
10 EB1
9 EB1
SB
P-B
R-L
R-G
BR
BR
BR
EC

System Outline

The navigation system displays the operating status and instructions for the automatic air conditioning or radio and player, as well as trip information. Additionally, the navigation system precisely measures the current vehicle position, displays the map obtained from the map database on the screen, and informs the route to the destination shown on the map using voice guidance.

Service Hints

N2 (A), N4 (C) Navigation ECU

(A) 9-Ground : Always approx. 12 volts
(A) 18-Ground : Approx. 12 volts with ignition SW at ACC or ON position
(A) 17-Ground . Always continuity
(C) 7-Ground : Always continuity

M8 Multi-Display

1-Ground : Always approx. 12 volts
4-Ground : Approx. 12 volts with ignition SW at ACC or ON position
2-Ground · Approx. 12 volts with ignition SW at ON or ST position
6-Ground . Always continuity

○ : Parts Location

Code	See Page	Code	See Page	Code	See Page
A45	70	J10 B	71	O5	72
B9	70	J14	71	P1	69
C15	70	J23	72	P8	73
D1	68	M5 A	71	R38	71
D7	70	M6 B	71	S6	73
D26	70	M7 D	71	T5	71
E8	70	M8 C	71	T13	73
F8	72	N2 A	72	T19	71
G4	70	N3 B	72	V2	69
J9 A	71	N4 C	72		

▭ : Junction Block and Wire Harness Connector

Code	See Page	Junction Block and Wire Harness (Connector Location)
2D	28	Dash Wire and Cowl Side J/B LH (Left Kick Panel)
2E		
2K	28	Floor No 1 Wire and Cowl Side J/B LH (Left Kick Panel)
2Q	30	Instrument Panel Integration Wire and Cowl Side J/B LH (Left Kick Panel)
3D	40	Dash Wire and Cowl Side J/B RH (Right Kick Panel)
3E		
3K	40	Floor No 2 Wire and Cowl Side J/B RH (Right Kick Panel)
3Q	42	Instrument Panel Integration Wire and Cowl Side J/B RH (Right Kick Panel)
4A	52	Dash Wire and J/B No.4 (Instrument Panel Center)
4C		
4D		
4E		
4F		
7B	64	Dash Wire and J/B No.7 (Behind the Grove Box)
7D	64	Engine Room No.2 Wire and J/B No.7 (Behind the Grove Box)

: Connector Joining Wire Harness and Wire Harness

Code	See Page	Joining Wire Harness and Wire Harness (Connector Location)
EB1	76	Engine Wire and Transmission Wire (On the Transmission)
IC2	78	Front Door LH Wire and Dash Wire (Left Kick Panel)
IE2	78	Dash Wire and Roof No 1 Wire (Left Kick Panel)
IL3	80	Instrument Panel Integration Wire and Computer Wire (Instrument Panel Center)
IN2	80	Engine Wire and Dash Wire (Behind the Glove Box)
IU1	82	Instrument Panel Integration Wire and Dash Wire (Behind the Glove Box)
IV3	82	Dash Wire and Floor No 2 Wire (Right Kick Panel)
IV4		
IX1	82	Instrument Panel Integration Wire and Engine Wire (Behind the Glove Box)
Ib2	84	Dash Wire and Dash Wire (Behind the Combination Meter)
Ie1	84	Dash Wire and Dash Wire (Behind the Glove Box)
Ig1	84	Dash Wire and Floor No 2 Wire (Right Side of Front Console)
BD2	86	Floor No 3 Wire and Floor No 1 Wire (Left Rear Side Quarter Panel)
BL1	88	Floor No 2 Wire and Floor No 3 Wire (Right Side of Rear Floor Crossmember)

: Ground Points

Code	See Page	Ground Points Location
EC	76	Rear Bank of Right Cylinder Head
IH	78	Set Bolt of Cowl Side J/B RH
II		
BK	86	Front Side Under the Front Passenger's Seat

: Splice Points

Code	See Page	Wire Harness with Splice Points	Code	See Page	Wire Harness with Splice Points
E10	76	Engine Wire	B23	88	Floor No.2 Wire
B2	88	Front Door LH Wire			

Multi-Display (w/o Navigation System)

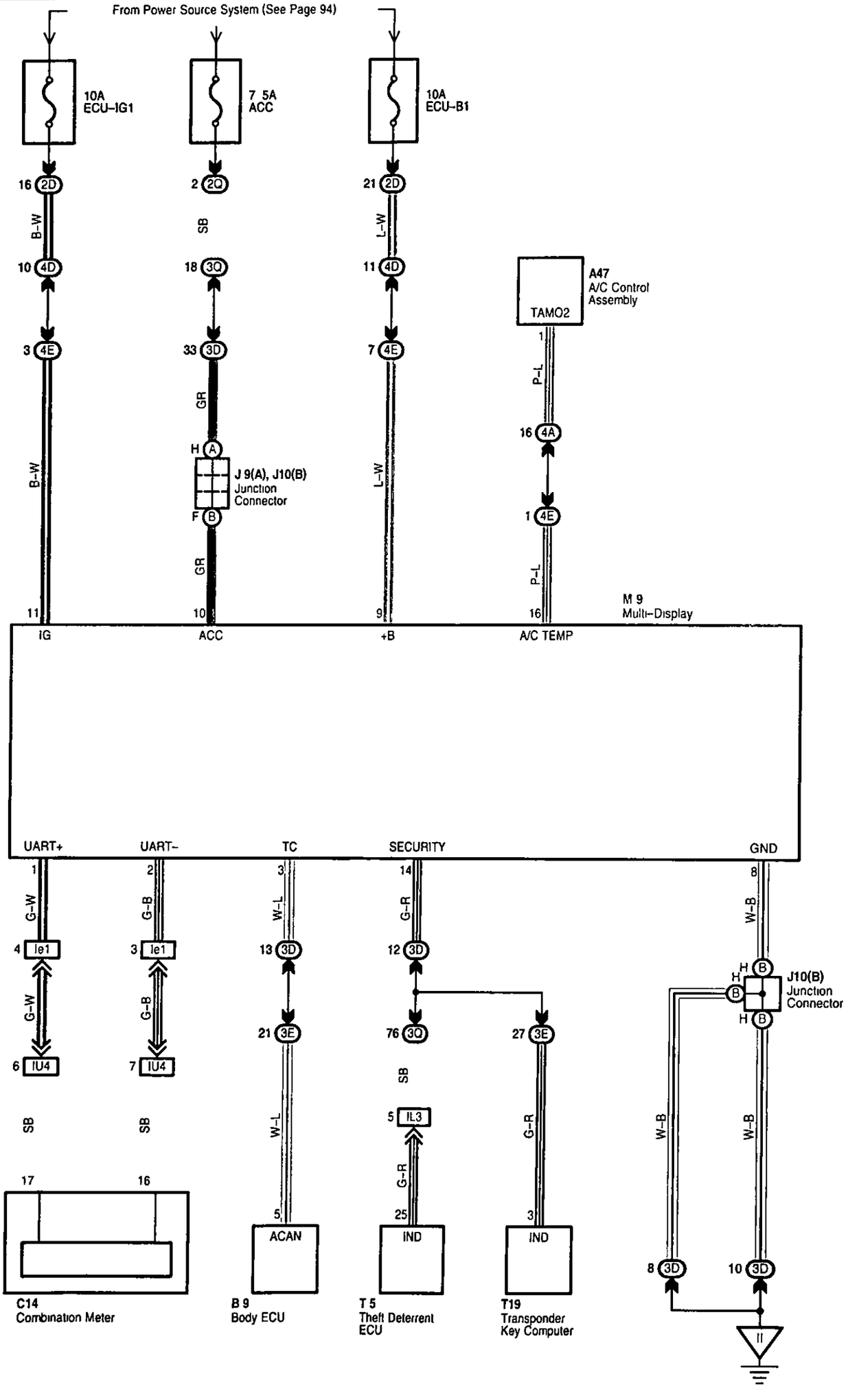

Service Hints

M9 Multi-Display

9-Ground : Always approx. 12 volts
10-Ground : Approx. 12 volts with ignition SW at ACC or ON position
11-Ground : Approx. 12 volts with ignition SW at ON or ST position
8-Ground : Always continuity

○ : Parts Location

Code	See Page	Code		See Page	Code	See Page
A47	70	J9	A	71	T5	71
B9	70	J10	B	71	T19	71
C14	70	M9		71		

⬭ : Junction Block and Wire Harness Connector

Code	See Page	Junction Block and Wire Harness (Connector Location)
2D	28	Dash Wire and Cowl Side J/B LH (Left Kick Panel)
2Q	30	Instrument Panel Integration Wire and Cowl Side J/B LH (Left Kick Panel)
3D	40	Dash Wire and Cowl Side J/B RH (Right Kick Panel)
3E		
3Q	42	Instrument Panel Integration Wire and Cowl Side J/B RH (Right Kick Panel)
4A	52	Dash Wire and J/B No 4 (Instrument Panel Center)
4D		
4E		

□ : Connector Joining Wire Harness and Wire Harness

Code	See Page	Joining Wire Harness and Wire Harness (Connector Location)
IL3	80	Instrument Panel Integration Wire and Computer Wire (Instrument Panel Center)
IU4	82	Instrument Panel Integration Wire and Dash Wire (Behind the Glove Box)
Ie1	84	Dash Wire and Dash Wire (Behind the Glove Box)

▽ : Ground Points

Code	See Page	Ground Points Location
II	78	Set Bolt of Cowl Side J/B RH

Combination Meter

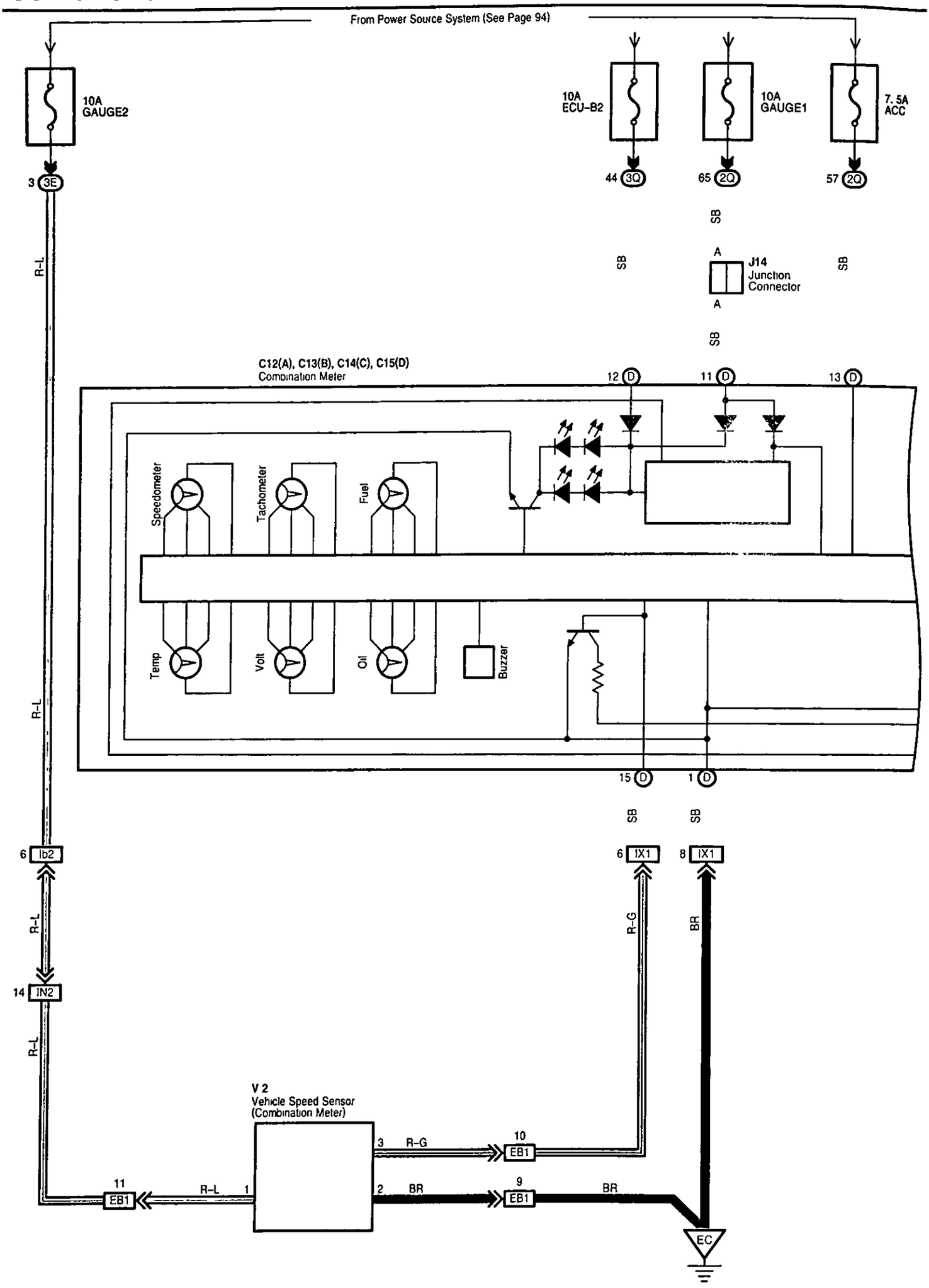

• 1 w/ Navigation System

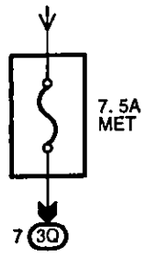

SB

C12(A), C13(B), C14(C), C15(D)
Combination Meter

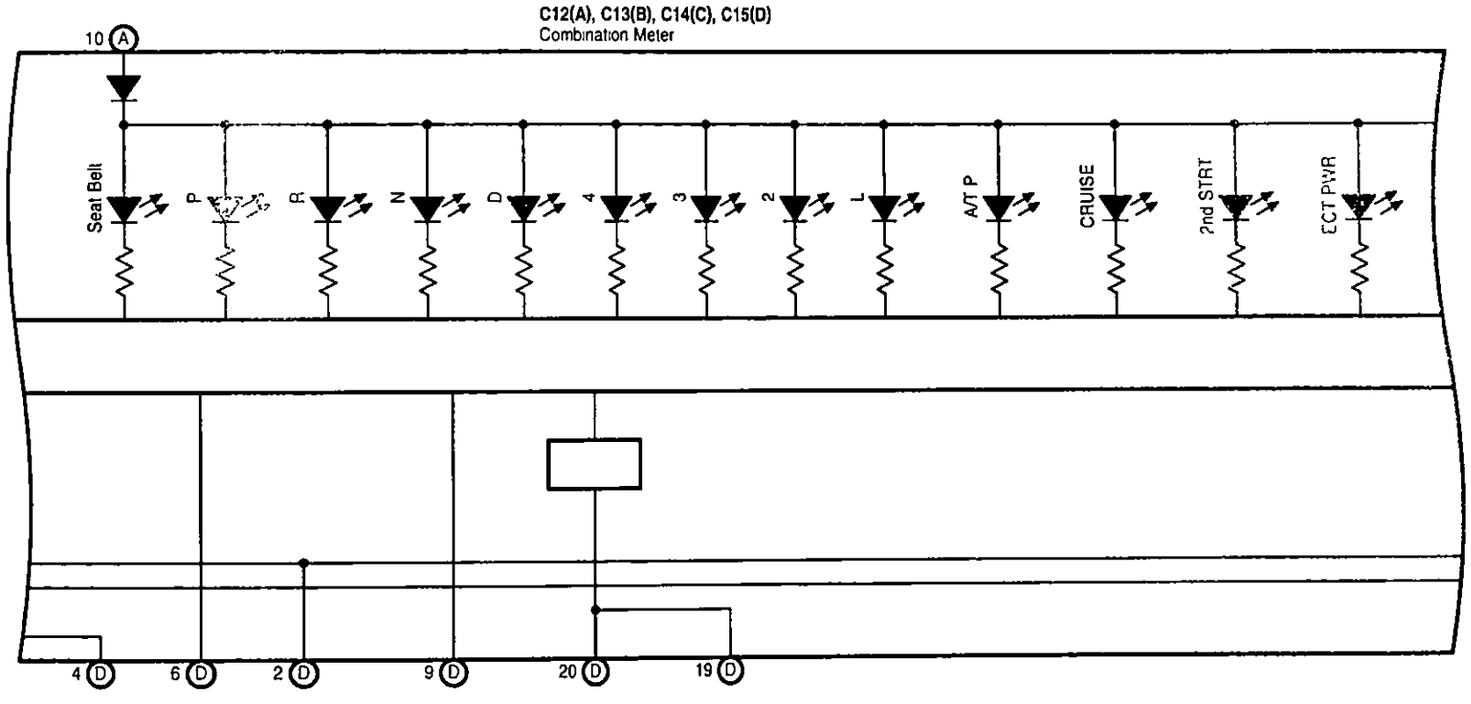

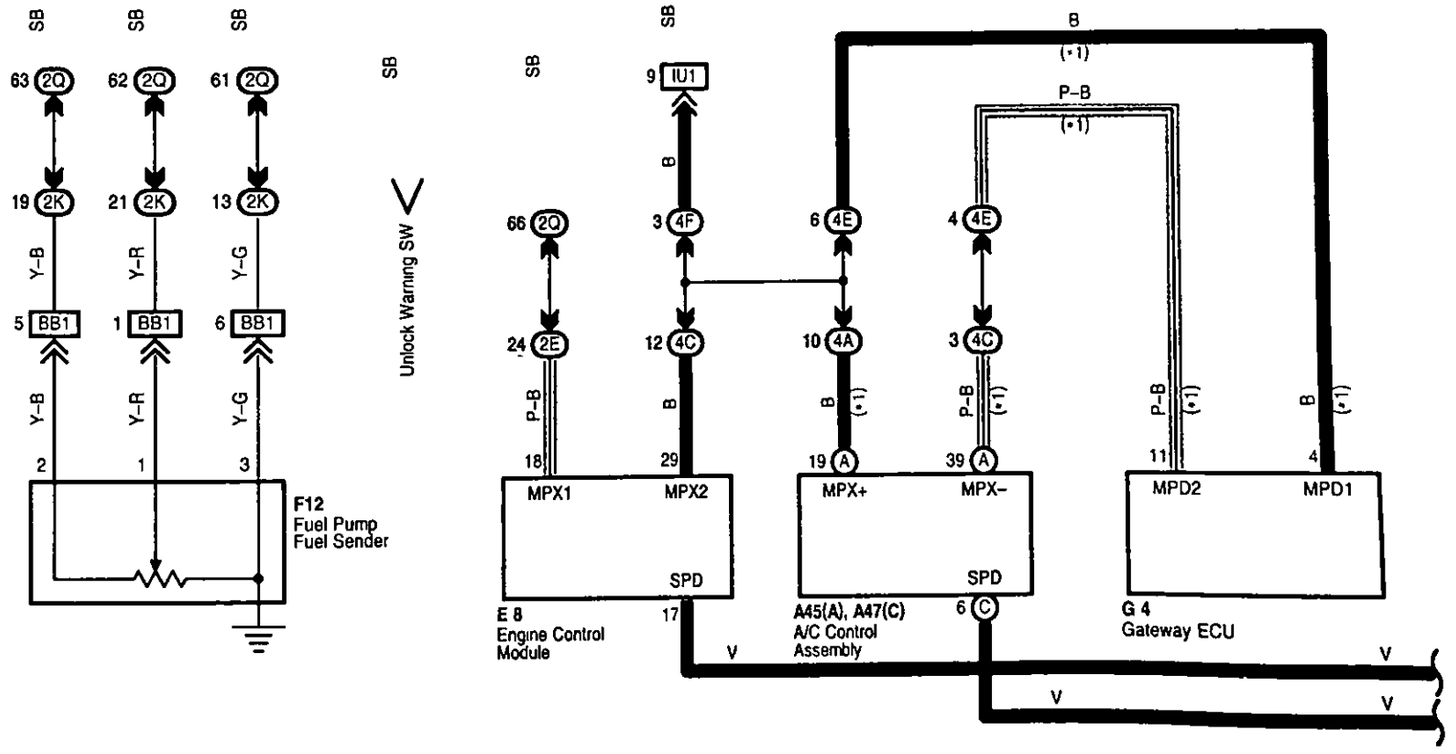

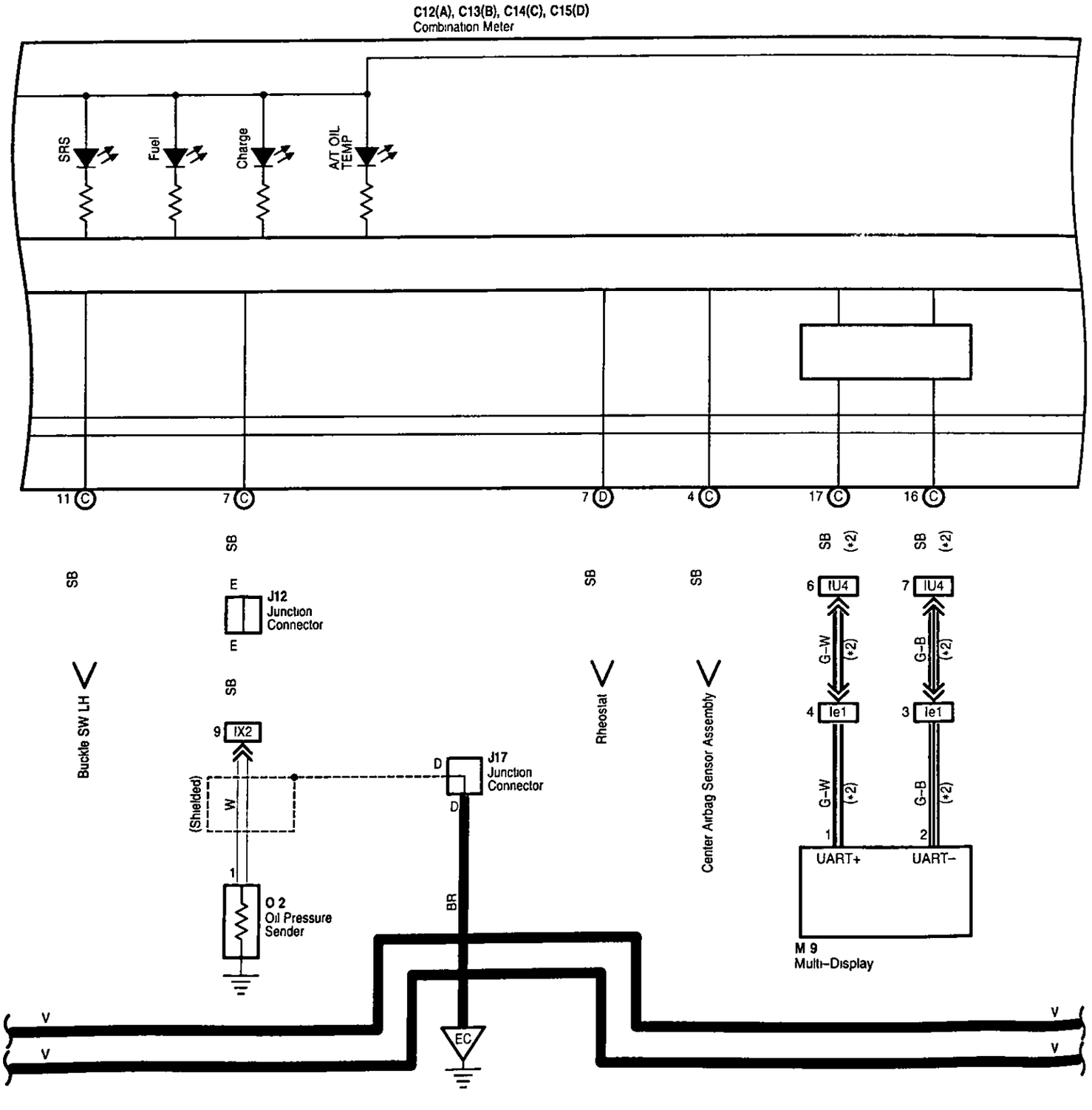
C12(A), C13(B), C14(C), C15(D)
Combination Meter
SRS
Fuel
Charge
A/T OIL TEMP
11 C
7 C
7 D
4 C
17 C
16 C
SB
SB
SB
SB
SB (*2)
SB (*2)
E
J12
Junction
Connector
E
6 IU4
7 IU4
G-W
(*2)
G-B
(*2)
4 Ie1
3 Ie1
Buckle SW LH
SB
9 IX2
(Shielded)
W
D
J17
Junction
Connector
D
Rheostat
Center Airbag Sensor Assembly
1
O 2
Oil Pressure
Sender
BR
1
2
UART+
UART-
M 9
Multi-Display
V
V
EC
V
V

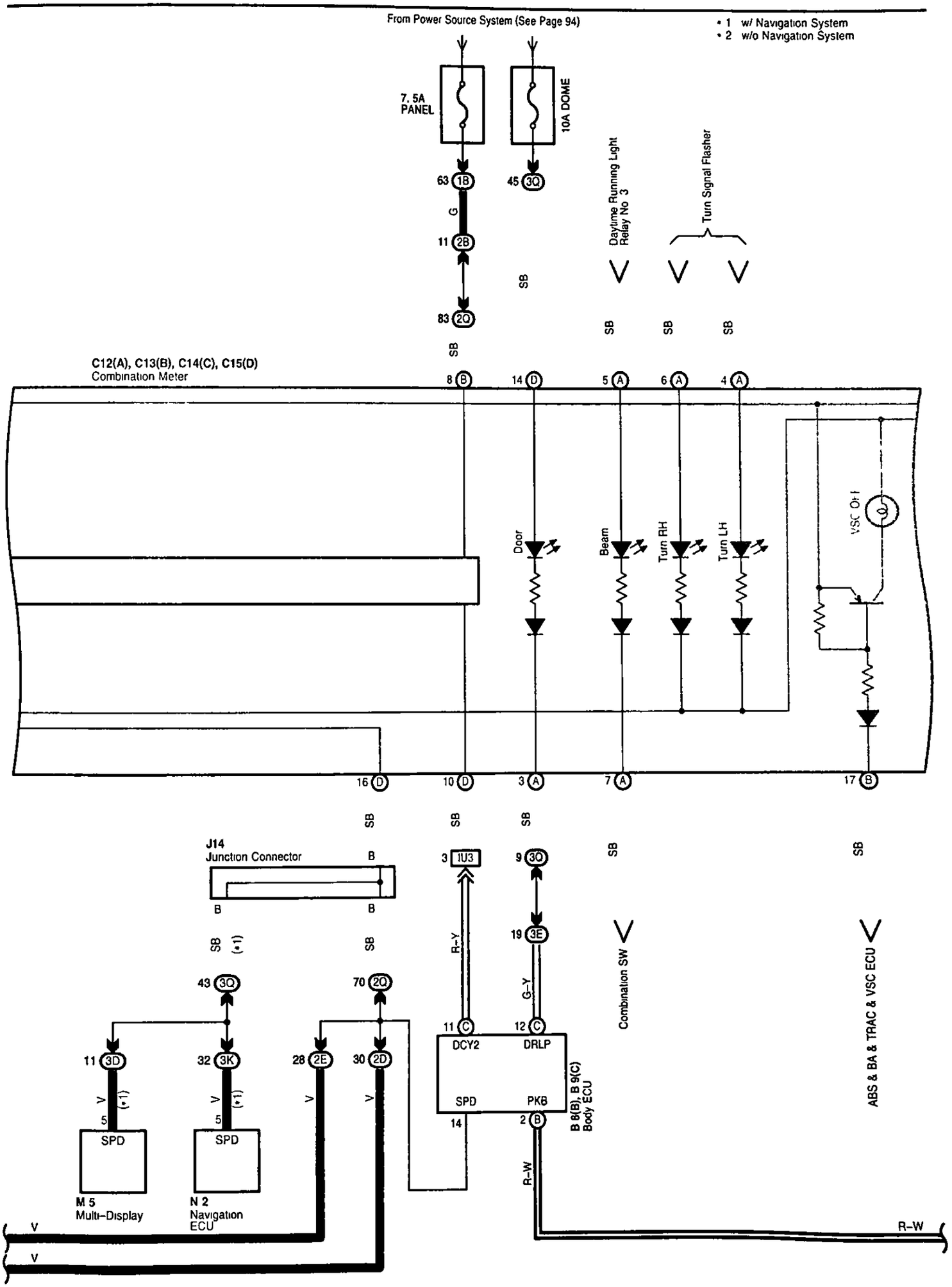
From Power Source System (See Page 94)
• 1 w/ Navigation System
• 2 w/o Navigation System
7.5A PANEL
10A DOME
63 1B
45 3Q
G
11 2B
83 2O
SB
Daytime Running Light Relay No 3
Turn Signal Flasher
C12(A), C13(B), C14(C), C15(D)
Combination Meter
8 B
14 D
5 A
6 A
4 A
Door
Beam
Turn RH
Turn LH
VSC Off
16 D
10 D
3 A
7 A
17 B
J14
Junction Connector
B
3 1U3
9 3Q
R-Y
19 3E
G-Y
Combination SW
ABS & BA & TRAC & VSC ECU
43 3Q
70 2Q
11 3D
32 3K
28 2E
30 2D
(*1)
5
SPD
M 5
Multi-Display
N 2
Navigation ECU
11 C
12 C
DCY2
DRLP
SPD
PKB
14
2 B
B 6(B), B 9(C)
Body ECU
R-W
V

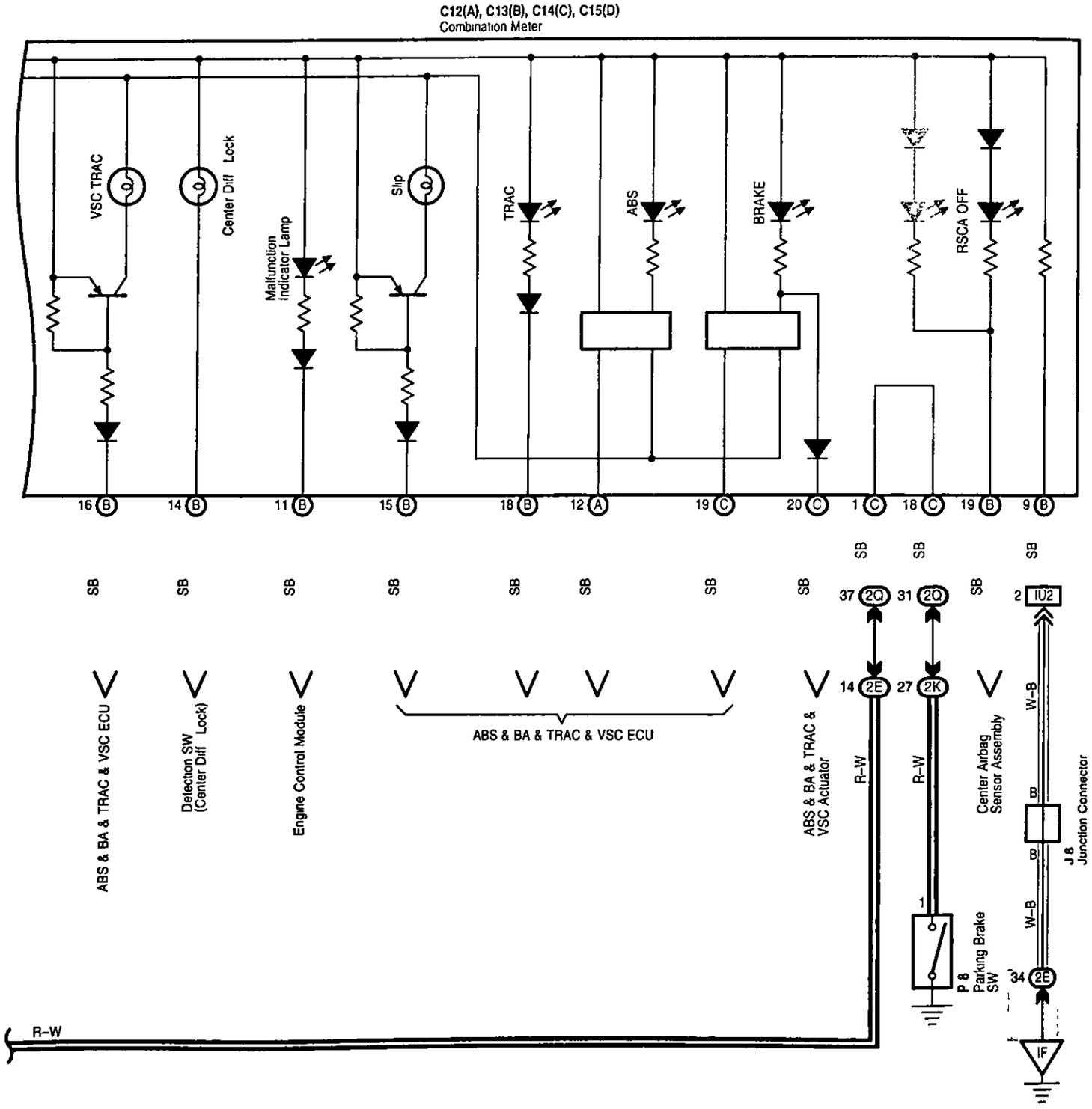
C12(A), C13(B), C14(C), C15(D)
Combination Meter
VSC TRAC
Center Diff Lock
Malfunction Indicator Lamp
Slip
TRAC
ABS
BRAKE
RSCA OFF
16 (B)
14 (B)
11 (B)
15 (B)
18 (B)
12 (A)
19 (C)
20 (C)
1 (C)
18 (C)
19 (B)
9 (B)
SB
ABS & BA & TRAC & VSC ECU
Detection SW (Center Diff Lock)
Engine Control Module
ABS & BA & TRAC & VSC ECU
ABS & BA & TRAC & VSC Actuator
37 2Q
31 2Q
14 2E
27 2K
R-W
Center Airbag Sensor Assembly
2 IU2
W-B
B
J 8 Junction Connector
1
P 8 Parking Brake SW
34 2E
IF
R-W

Service Hints

P8 Parking Brake SW

1-Ground : Closed with parking brake lever pulled up

C12 (A), C13 (B), C15 (D) Combination Meter

(D) 12, (D) 14-Ground : Always approx. 12 volts
(D) 13-Ground : Approx. 12 volts with ignition SW at ACC or ON position
(A) 10, (D) 11-Ground : Approx. 12 volts with ignition SW at ON or ST position
(B) 8-Ground : Approx 12 volts with light control SW at TAIL or HEAD position
(B) 9, (D) 1-Ground : Always continuity

○ : Parts Location

Code		See Page	Code		See Page	Code	See Page
A45	A	70	C15	D	70	J17	71
A47	C	70	E8		70	M5	71
B8	B	70	F12		72	M9	71
B9	C	70	G4		70	N2	72
C12	A	70	J8		71	O2	69
C13	B	70	J12		71	P8	73
C14	C	70	J14		71	V2	69

⬭ : Junction Block and Wire Harness Connector

Code	See Page	Junction Block and Wire Harness (Connector Location)
1B	24	Engine Room No 2 Wire and Engine Room J/B (Engine Compartment Left)
2B	28	Engine Room No 2 Wire and Cowl Side J/B LH (Left Kick Panel)
2D 2E	28	Dash Wire and Cowl Side J/B LH (Left Kick Panel)
2K	28	Floor No.1 Wire and Cowl Side J/B LH (Left Kick Panel)
2Q	30	Instrument Panel Integration Wire and Cowl Side J/B LH (Left Kick Panel)
3D 3E	40	Dash Wire and Cowl Side J/B RH (Right Kick Panel)
3K	40	Floor No 2 Wire and Cowl Side J/B RH (Right Kick Panel)
3Q	42	Instrument Panel Integration Wire and Cowl Side J/B RH (Right Kick Panel)
4A 4C 4E 4F	52	Dash Wire and J/B No.4 (Instrument Panel Center)

▭ : Connector Joining Wire Harness and Wire Harness

Code	See Page	Joining Wire Harness and Wire Harness (Connector Location)
EB1	76	Engine Wire and Transmission Wire (On the Transmission)
IN2	80	Engine Wire and Dash Wire (Behind the Glove Box)
IU1 IU2 IU3 IU4	82	Instrument Panel Integration Wire and Dash Wire (Behind the Glove Box)
IX1 IX2	82	Instrument Panel Integration Wire and Engine Wire (Behind the Glove Box)
Ib2	84	Dash Wire and Dash Wire (Behind the Combination Meter)
Ie1	84	Dash Wire and Dash Wire (Behind the Glove Box)
BB1	86	Floor No.1 Wire and Fuel Tank Wire (Near the Fuel Tank)

▽ : Ground Points

Code	See Page	Ground Points Location
EC	76	Rear Bank of Right Cylinder Head
IF	78	Set Bolt of Cowl Side J/B LH

Air Conditioning (Front)

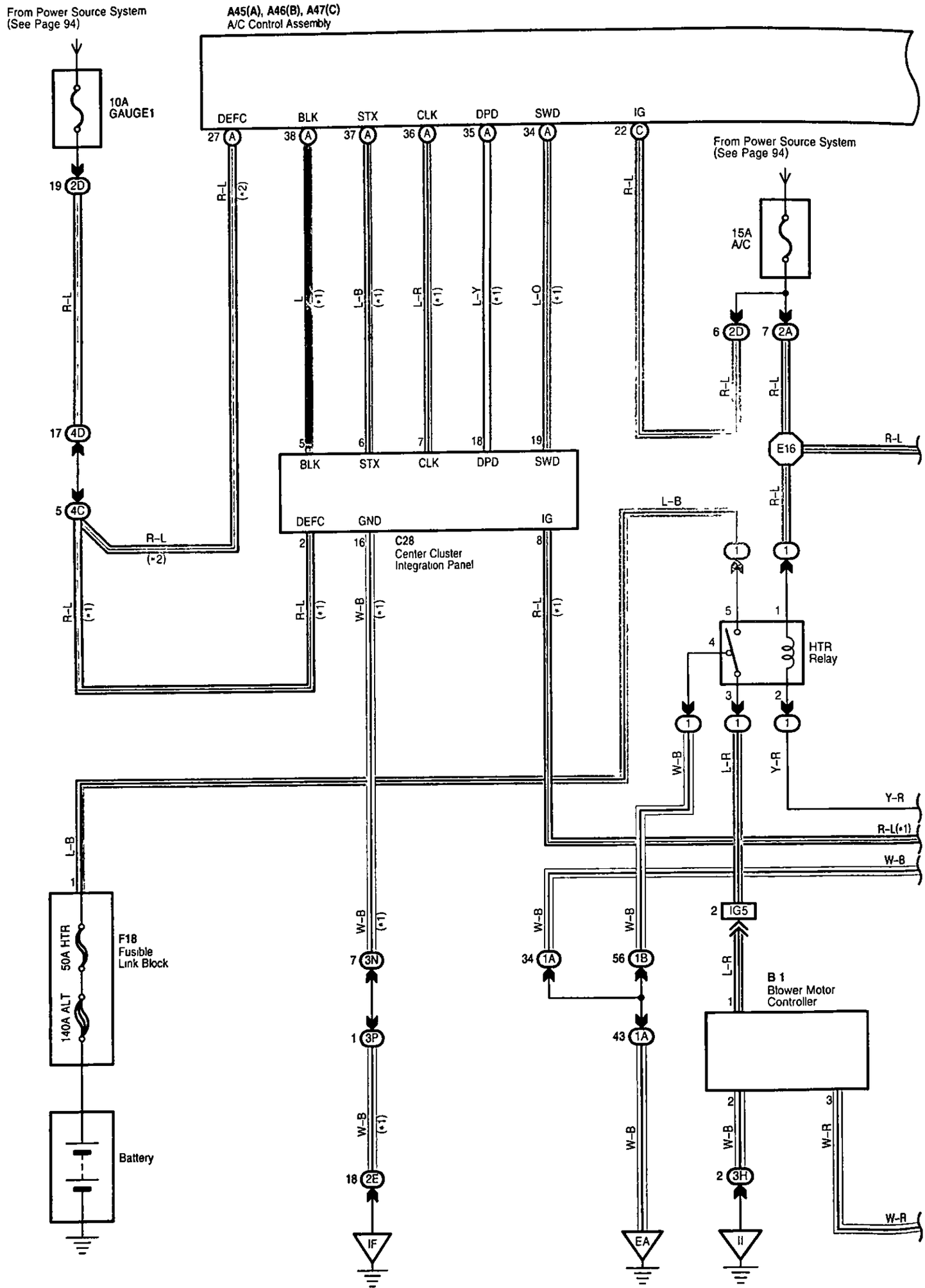

A45(A), A46(B), A47(C)
A/C Control Assembly

*1 w/ Navigation System
*2 w/o Navigation System

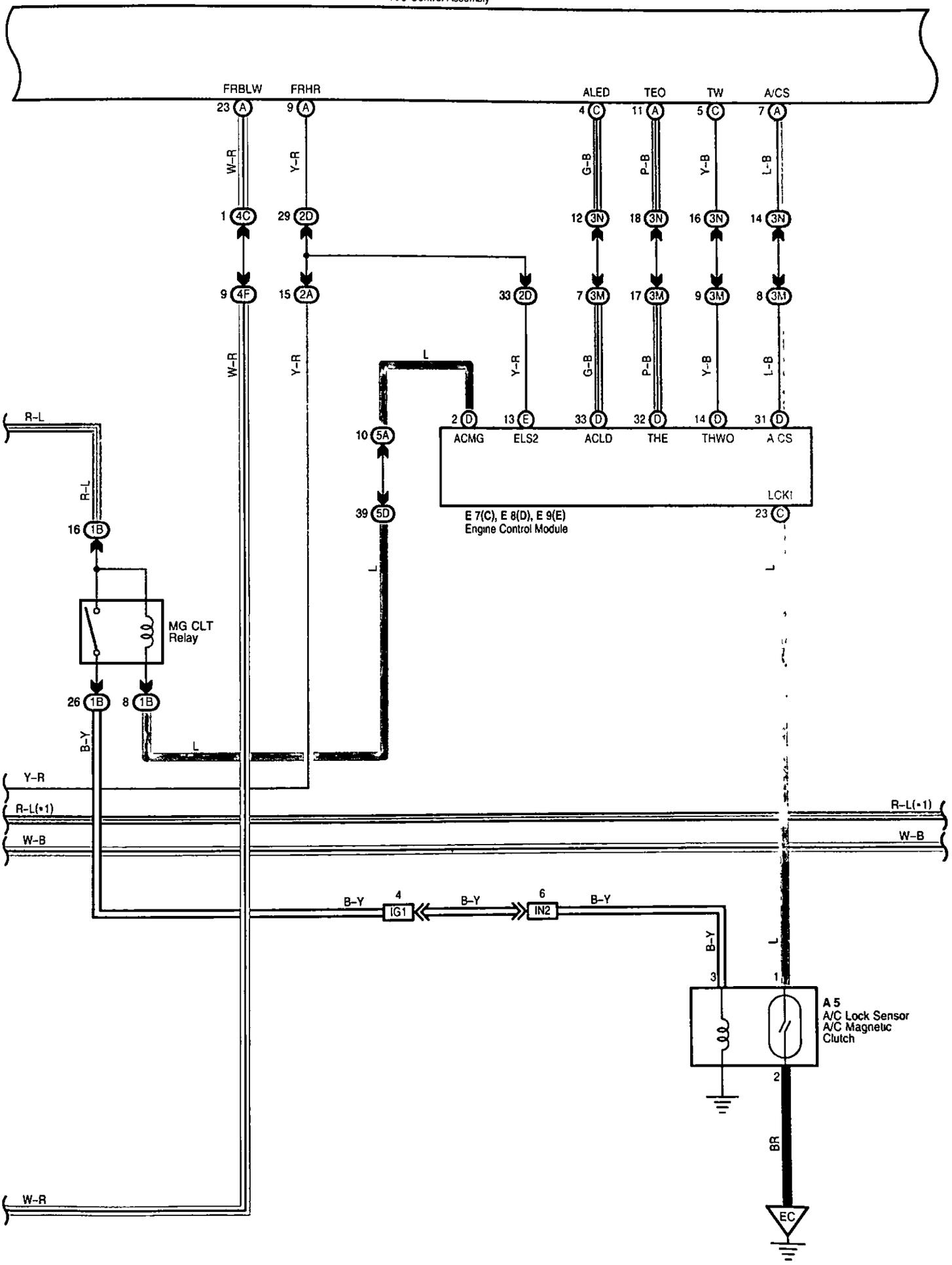

Air Conditioning (Front)

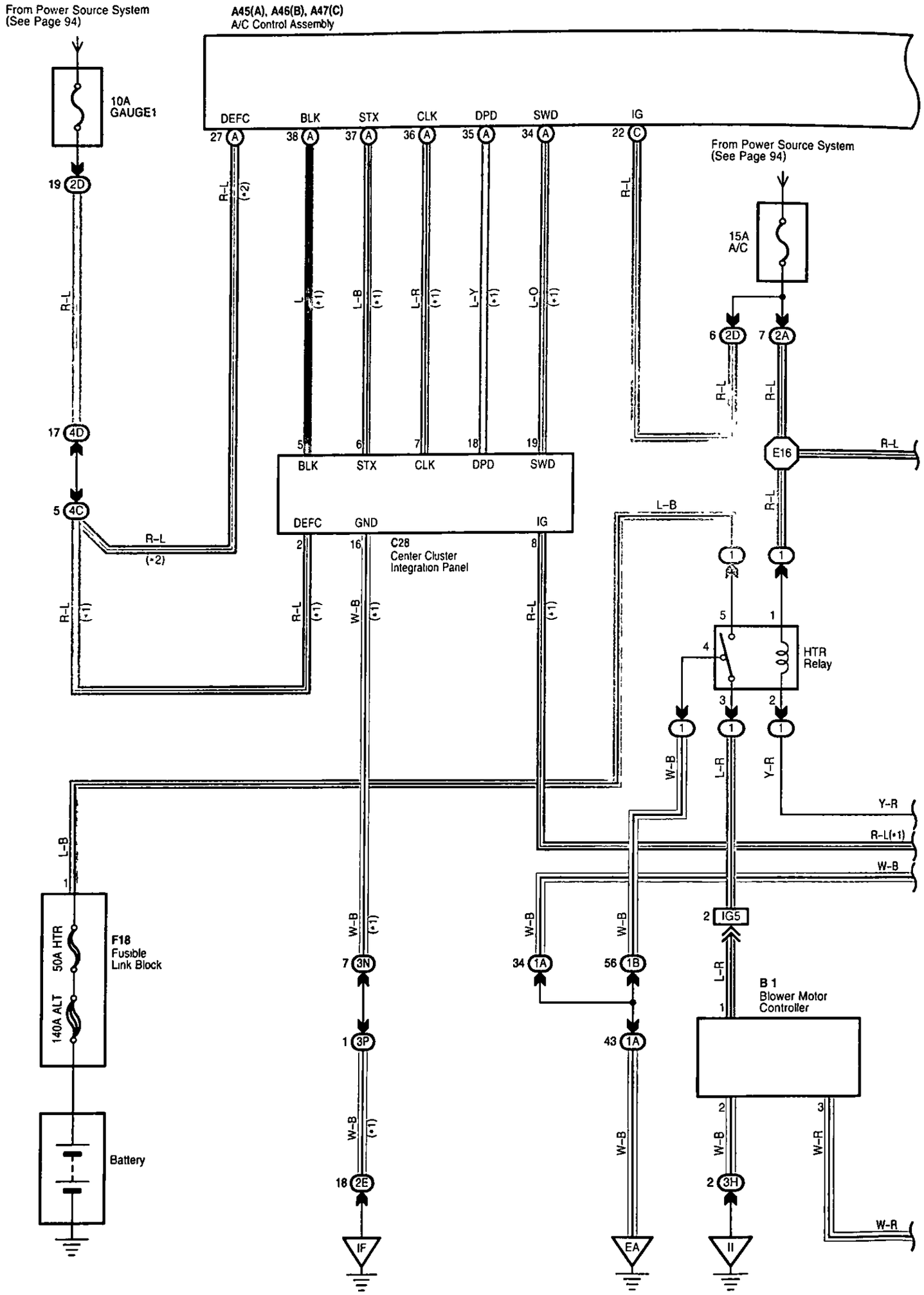

A45(A), A46(B), A47(C)
A/C Control Assembly

• 1 w/ Navigation System
• 2 w/o Navigation System

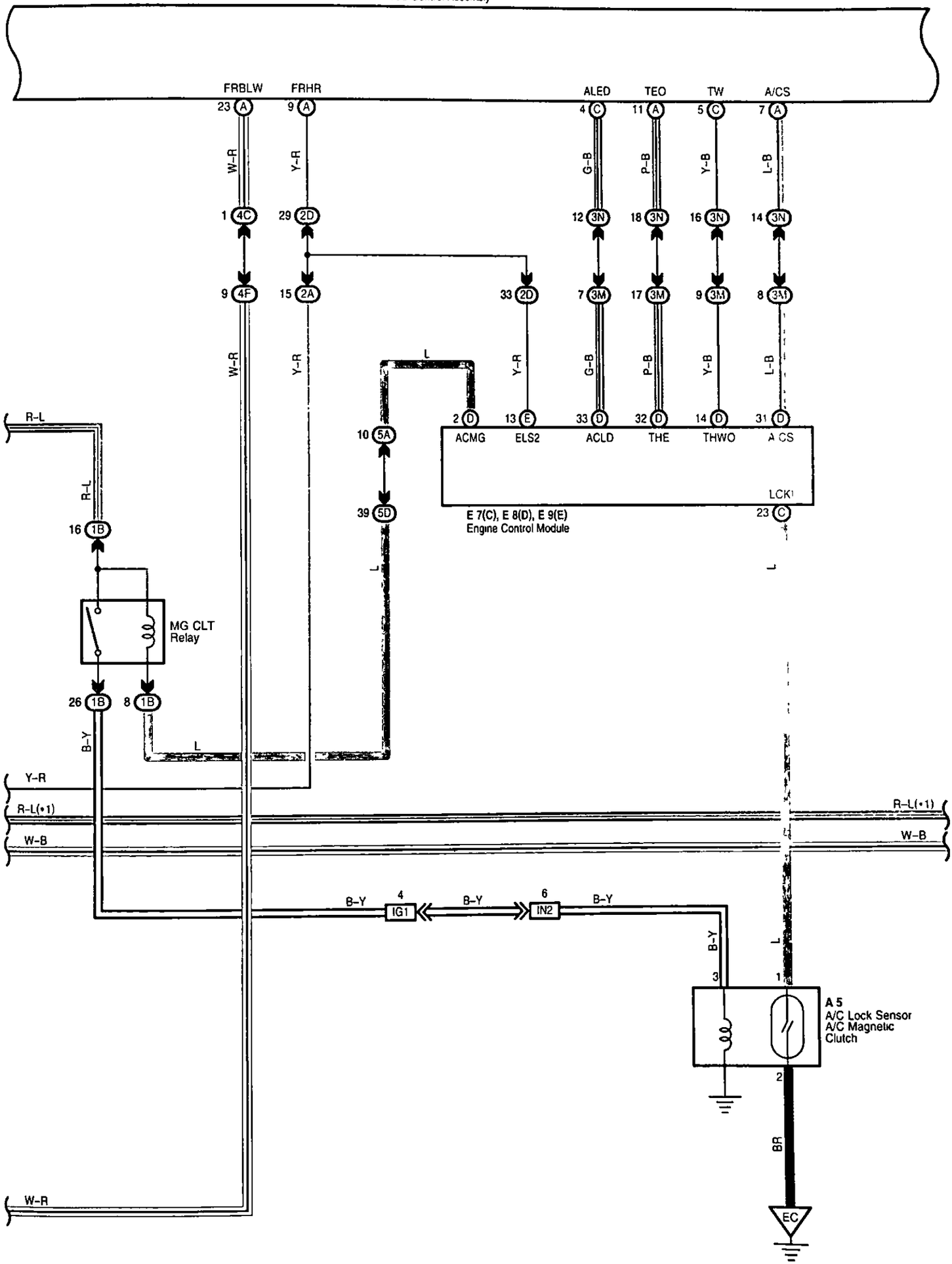

Air Conditioning (Front)

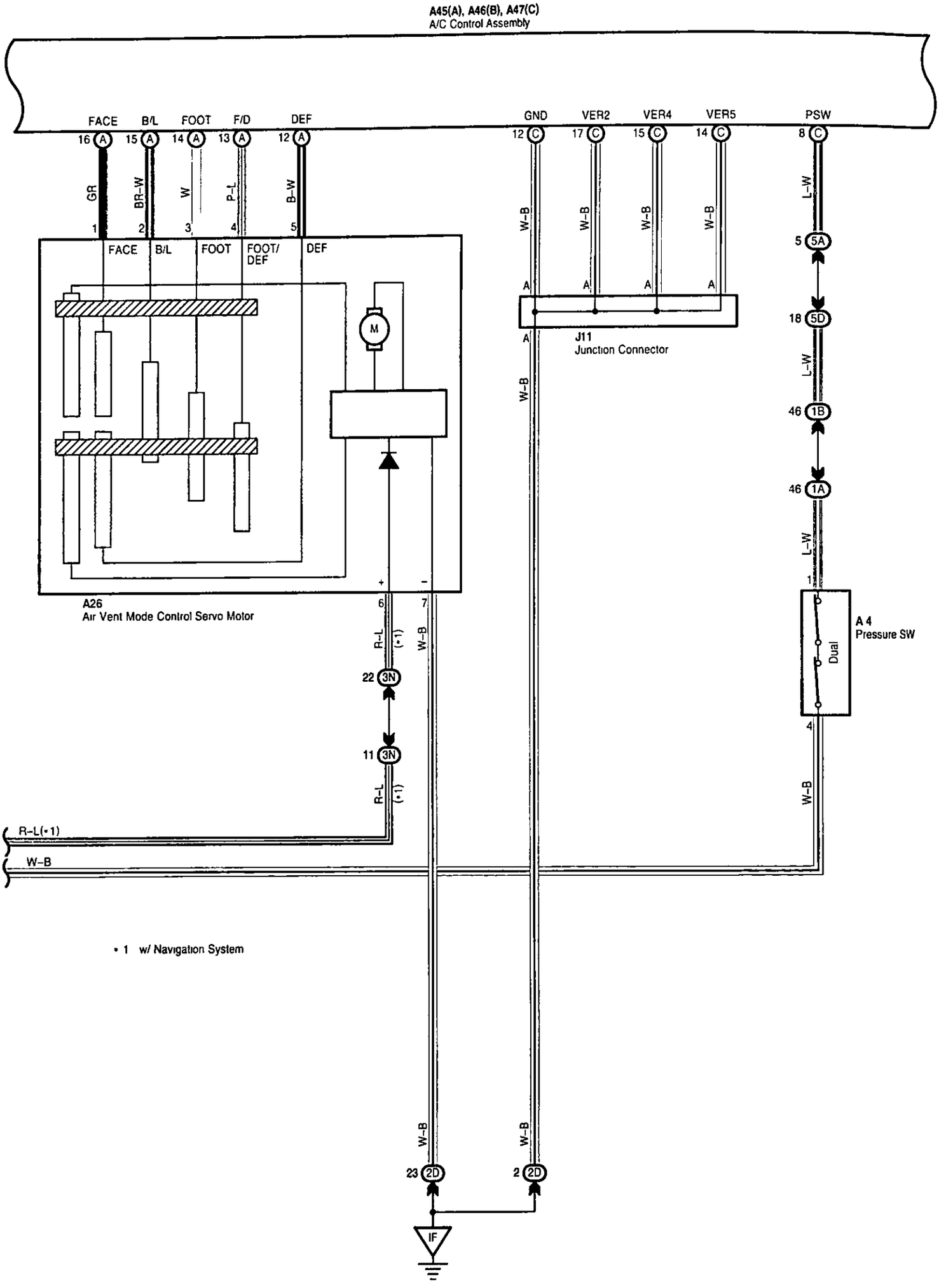

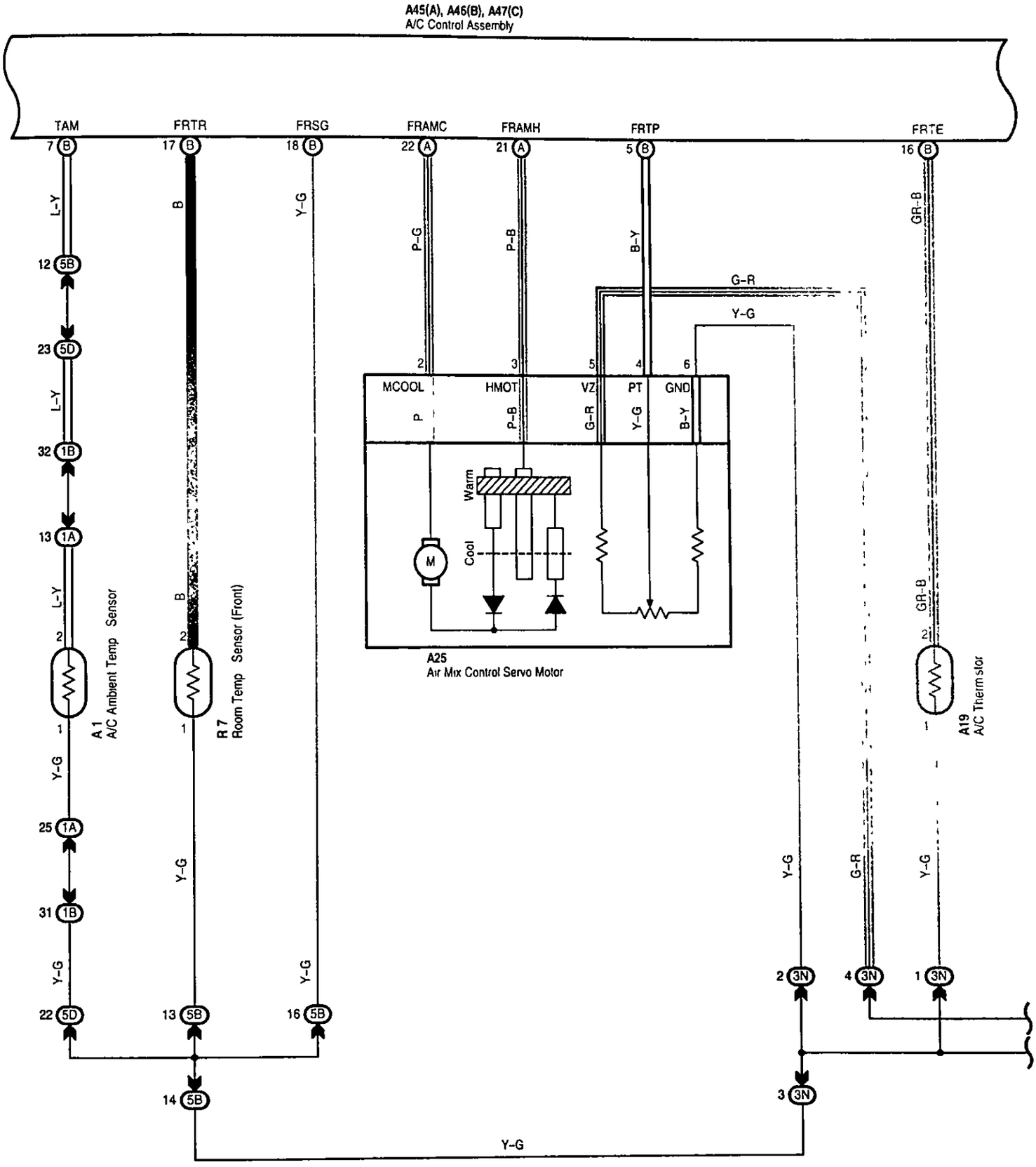
A45(A), A46(B), A47(C)
A/C Control Assembly
TAM
FRTR
FRSG
FRAMC
FRAMH
FRTP
FRTE
7 (B)
17 (B)
18 (B)
22 (A)
21 (A)
5 (B)
16 (B)
L-Y
B
Y-G
P-G
P-B
B-Y
GR-B
G-R
12 (5B)
23 (5D)
32 (1B)
13 (1A)
25 (1A)
31 (1B)
22 (5D)
13 (5B)
16 (5B)
14 (5B)
2 (3N)
4 (3N)
1 (3N)
3 (3N)
MCOOL
HMOT
VZ
PT
GND
P
P-B
G-R
Y-G
B-Y
Warm
Cool
M
A25
Air Mix Control Servo Motor
A1
A/C Ambient Temp Sensor
R7
Room Temp Sensor (Front)
A19
A/C Thermistor

Air Conditioning (Front)

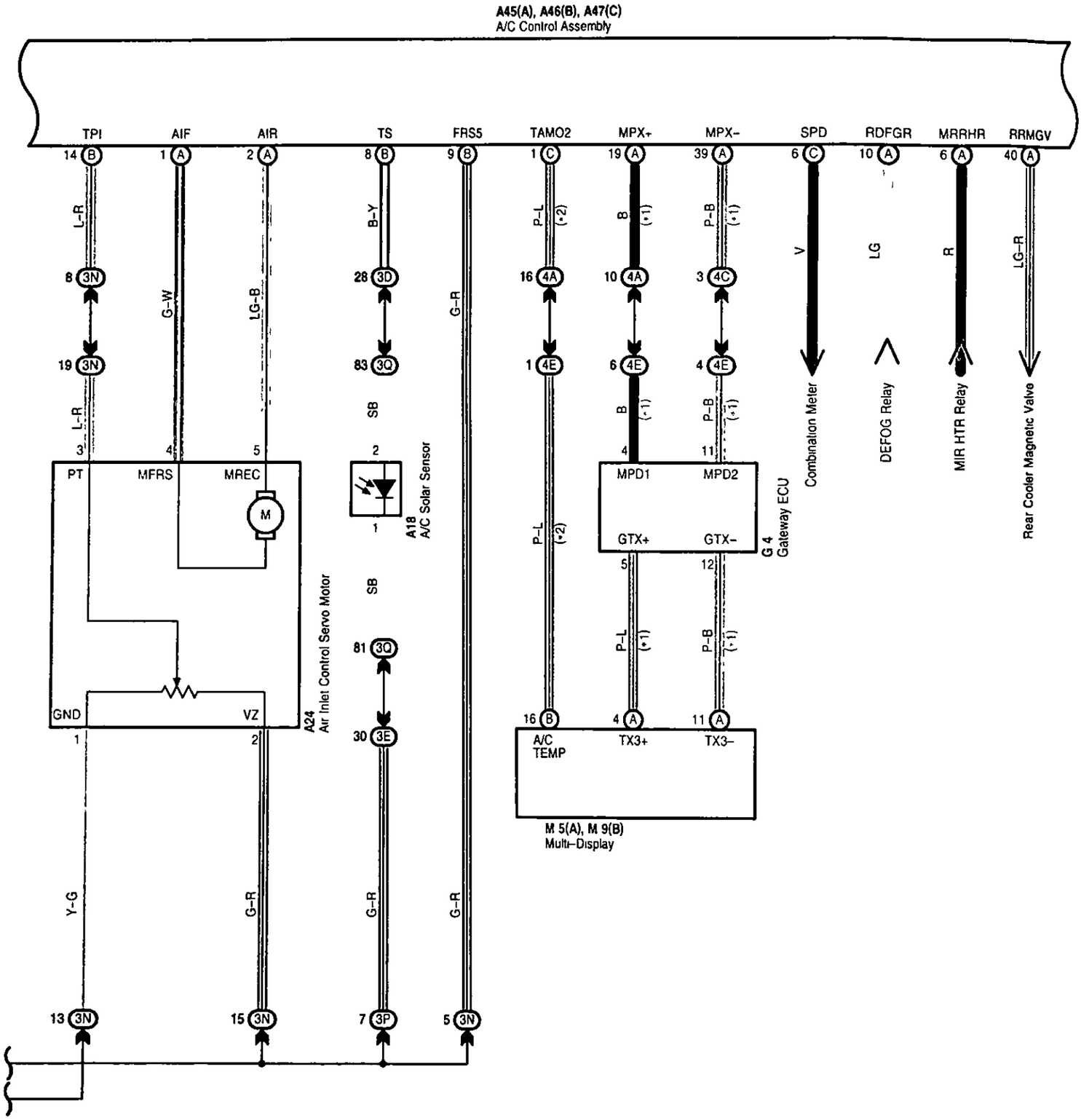

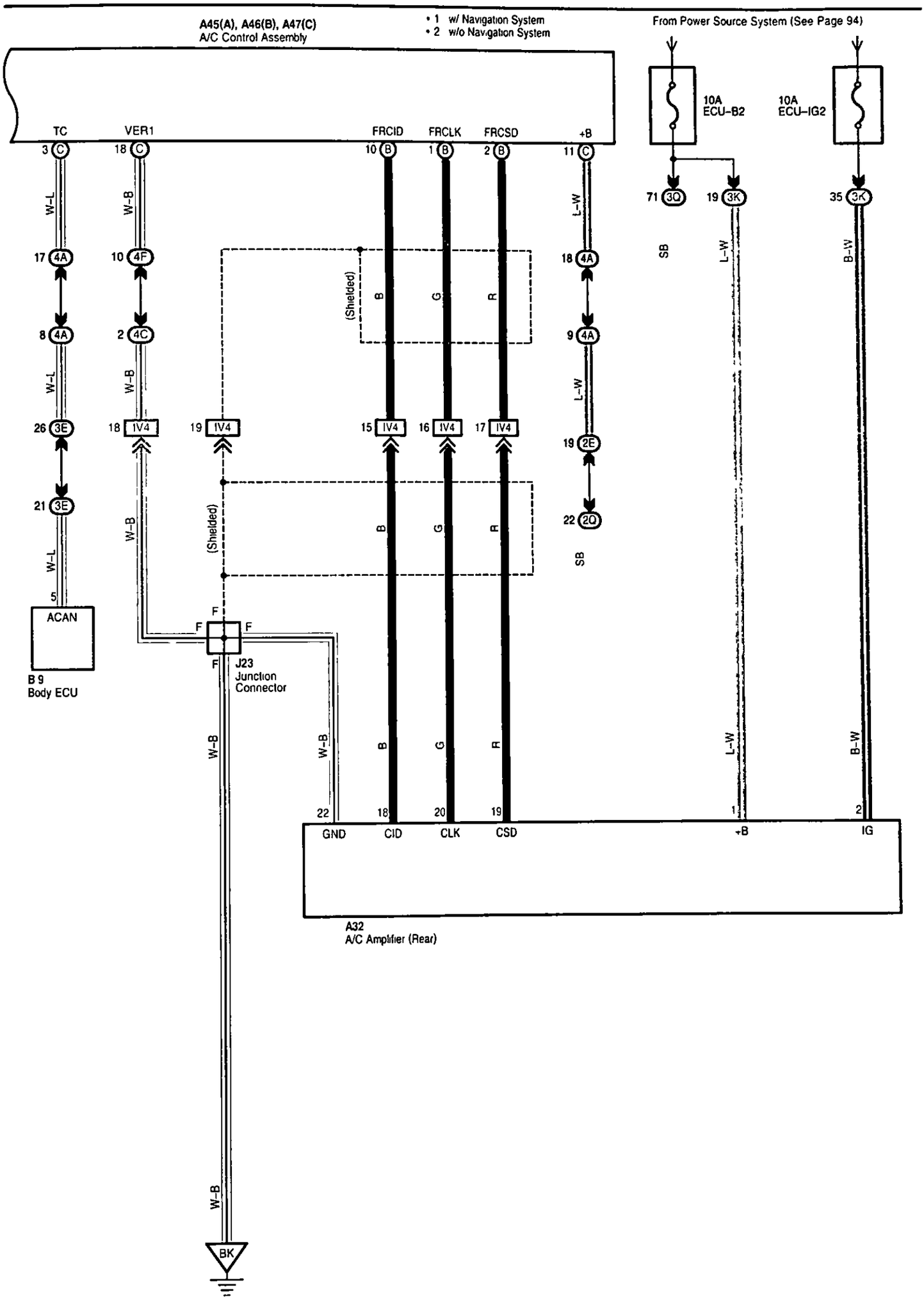
A45(A), A46(B), A47(C)
A/C Control Assembly
• 1 w/ Navigation System
• 2 w/o Navigation System
From Power Source System (See Page 94)
10A
ECU-B2
10A
ECU-IG2
TC
VER1
FRCID
FRCLK
FRCSD
+B
ACAN
B 9
Body ECU
J23
Junction
Connector
(Shielded)
W-L
W-B
L-W
B-W
B
G
R
SB
GND
CID
CLK
CSD
+B
IG
A32
A/C Amplifier (Rear)
BK

Air Conditioning (Front)

System Outline

1. Heater Blower Operation

Manual operation

When the blower speed is set ant any speed by the blower control SW, the A/C control assembly sends a signal to the blower motor controller, and controls the blower motor speed.

Auto operation

When the auto SW is operated, the A/C control assembly sends signals to the blower motor controller, according to the signals from respective sensors, commands from the temperature SW etc., and controls the blower motor automatically.

2. Air Inlet Control Servo Motor Control

When the FRESH/RECIRC select SW is switched to RECIRC, the motor in the air inlet control servo motor rotates to move the damper to the RECIRC side. The damper position is recognized by the A/C control assembly TERMINAL TPI, and rotates the motor until the damper reaches its position.

When the FRESH/RECIRC select SW is switched to FRESH, the motor in the air inlet control servo motor rotates to move the damper to the FRESH side. The damper position is recognized by the A/C control assembly TERMINAL TPI, and rotates the motor until the damper reaches its position.

When the FRESH/RECIRC select SW is set to auto, the exhaust gas sensor in the engine room detects the ingredient of the exhaust emission, and switches the FRESH/RECIRC mode automatically.

3. Air Vent Mode Control Servo Motor

When the mode select SW in the A/C control assembly is pushed, a signal is sent from the A/C control assembly, and activates the air vent mode control servo motor. This causes the servo motor to rotate to the position selected using the mode select SW (FACE, BI-LEVEL, FOOT, FOOT/DEF, DEF), and moves the damper.

4. Air Mix Control Servo Motor

When the temperature control SW in the A/C control assembly is pushed, a signal is sent from the A/C control assembly, and activates the air mix control servo motor. The motor and damper is moved until it reaches the temperature set by the temperature control SW.

5. Air Conditioning Operation

The A/C control assembly receives various signals, i. e., the engine RPM from the crankshaft position sensor, outlet temperature from the A/C ambient temp. sensor, coolant temperature from the engine coolant temp. sensor, and the lock signal from the A/C compressor, etc. When the engine is started and the A/C SW is turned on, a signal is sent to the A/C control assembly. As a result, the magnetic clutch is turned on and operates the compressor.

In addition, when the engine control module detects that the magnetic clutch is on and the A/C compressor is operating, it controls the engine in the direction to avoid lowering the engine RPM during A/C operation.

When any of the following signals are sent to the A/C control assembly, the A/C is turned off.

- Coolant temp. is high.
- Outlet air temp. is low.
- Large difference between the engine speed and compressor speed.
- The refrigerant pressure is abnormally high or low.

Service Hints

A45 (A), A47 (C) A/C Control Assembly

(C) 11-Ground : Always approx. 12 volts
(C) 22-Ground : Approx. 12 volts with ignition SW at ON or ST position
(A) 27-Ground : Approx. 12 volts with ignition SW at ON or ST position (w/o navigation system)
(C) 12, (C) 14, (C) 15, (C) 17, (C) 18-Ground : Always continuity

C28 Center Cluster Integration Panel (w/ Navigation System)

2-Ground : Approx. 12 volts with ignition SW at ON or ST position
16-Ground : Always continuity

○ : Parts Location

Code	See Page	Code		See Page	Code		See Page
A1	68	A45	A	70	F18		68
A4	68	A46	B	70	G4		70
A5	68	A47	C	70	J11		71
A18	70	B1		70	J23		72
A19	70	B9		70	M5	A	71
A24	70	C28		70	M9	B	71
A25	70	E7	C	70	R7		71
A26	70	E8	D	70			
A32	72	E9	E	70			

⬭ : Relay Blocks

Code	See Page	Relay Blocks (Relay Block Location)
1	22	Engine Room R/B (Engine Compartment Left)

⬭ : Junction Block and Wire Harness Connector

Code	See Page	Junction Block and Wire Harness (Connector Location)
1A	24	Engine Room Main Wire and Engine Room J/B (Engine Compartment Left)
1B	24	Engine Room No 2 Wire and Engine Room J/B (Engine Compartment Left)
2A	28	Engine Room No 2 Wire and Cowl Side J/B LH (Left Kick Panel)
2D	28	Dash Wire and Cowl Side J/B LH (Left Kick Panel)
2E		
2Q	30	Instrument Panel Integration Wire and Cowl Side J/B LH (Left Kick Panel)
3D	40	Dash Wire and Cowl Side J/B RH (Right Kick Panel)
3E		
3H		
3K	40	Floor No.2 Wire and Cowl Side J/B RH (Right Kick Panel)
3M	43	Dash Wire and Cowl Side J/B RH (Right Kick Panel)
3N		
3P		
3Q	42	Instrument Panel Integration Wire and Cowl Side J/B RH (Right Kick Panel)
4A	52	Dash Wire and J/B No 4 (Instrument Panel Center)
4C		
4D		
4E		
4F		
5A	56	Dash Wire and J/B No.5 (Behind the Combination Meter)
5B		
5D	56	Engine Room No 2 Wire and J/B No 5 (Behind the Combination Meter)

□ : Connector Joining Wire Harness and Wire Harness

Code	See Page	Joining Wire Harness and Wire Harness (Connector Location)
IG1	78	Engine Room No.2 Wire and Dash Wire (Behind the Combination Meter)
IG5		
IN2	80	Engine Wire and Dash Wire (Behind the Glove Box)
IV4	82	Dash Wire and Floor No.2 Wire (Right Kick Panel)

Air Conditioning (Front)

▽ : **Ground Points**

Code	See Page	Ground Points Location
EA	76	Front Right Side of Fender Apron
EC	76	Rear Bank of Right Cylinder Head
IF	78	Set Bolt of Cowl Side J/B LH
II	78	Set Bolt of Cowl Side J/B RH
BK	86	Front Side Under the Front Passenger's Seat

○ : **Splice Points**

Code	See Page	Wire Harness with Splice Points	Code	See Page	Wire Harness with Splice Points
E16	76	Engine Room No 2 Wire			

Air Conditioning (Rear)

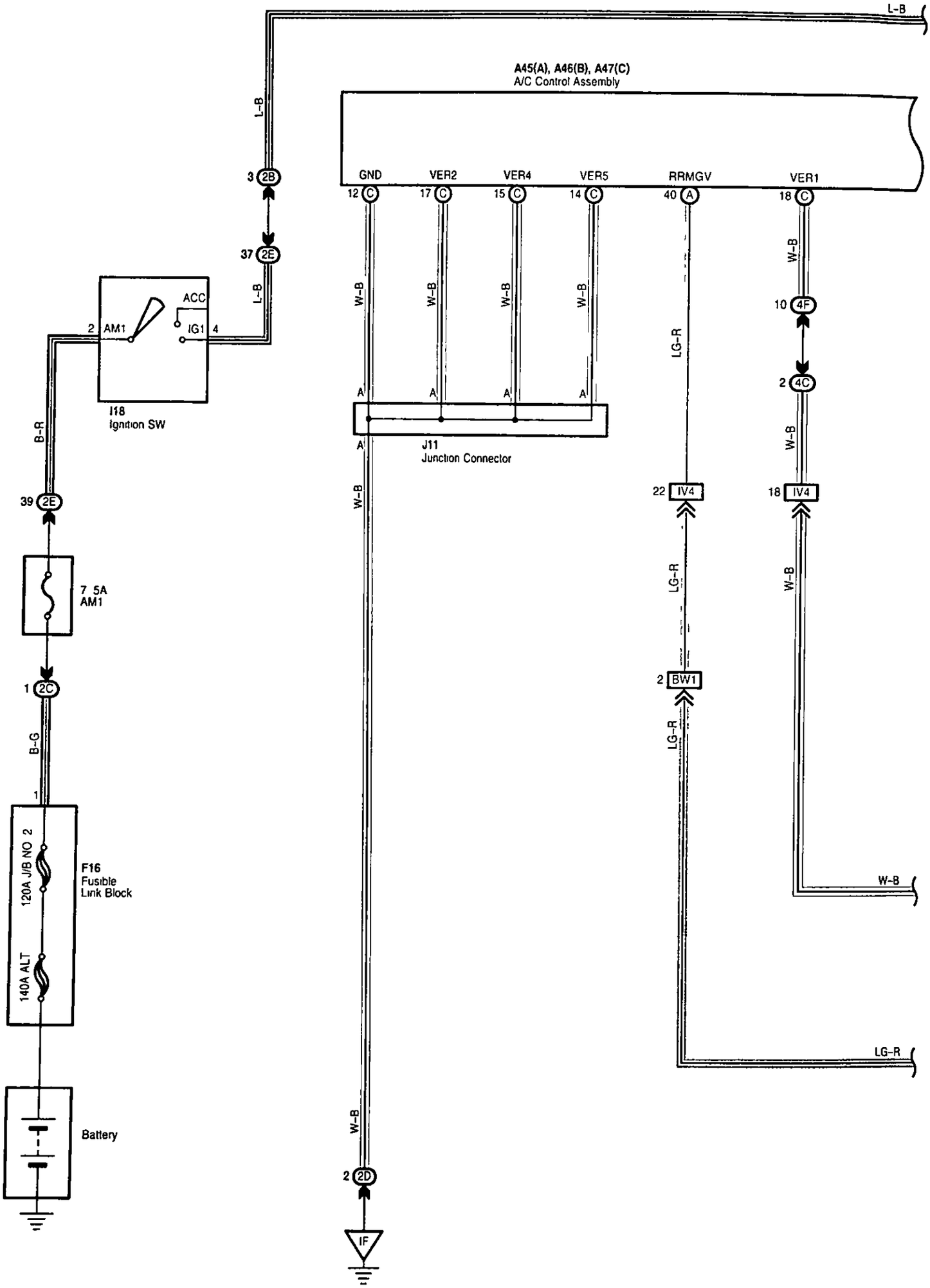

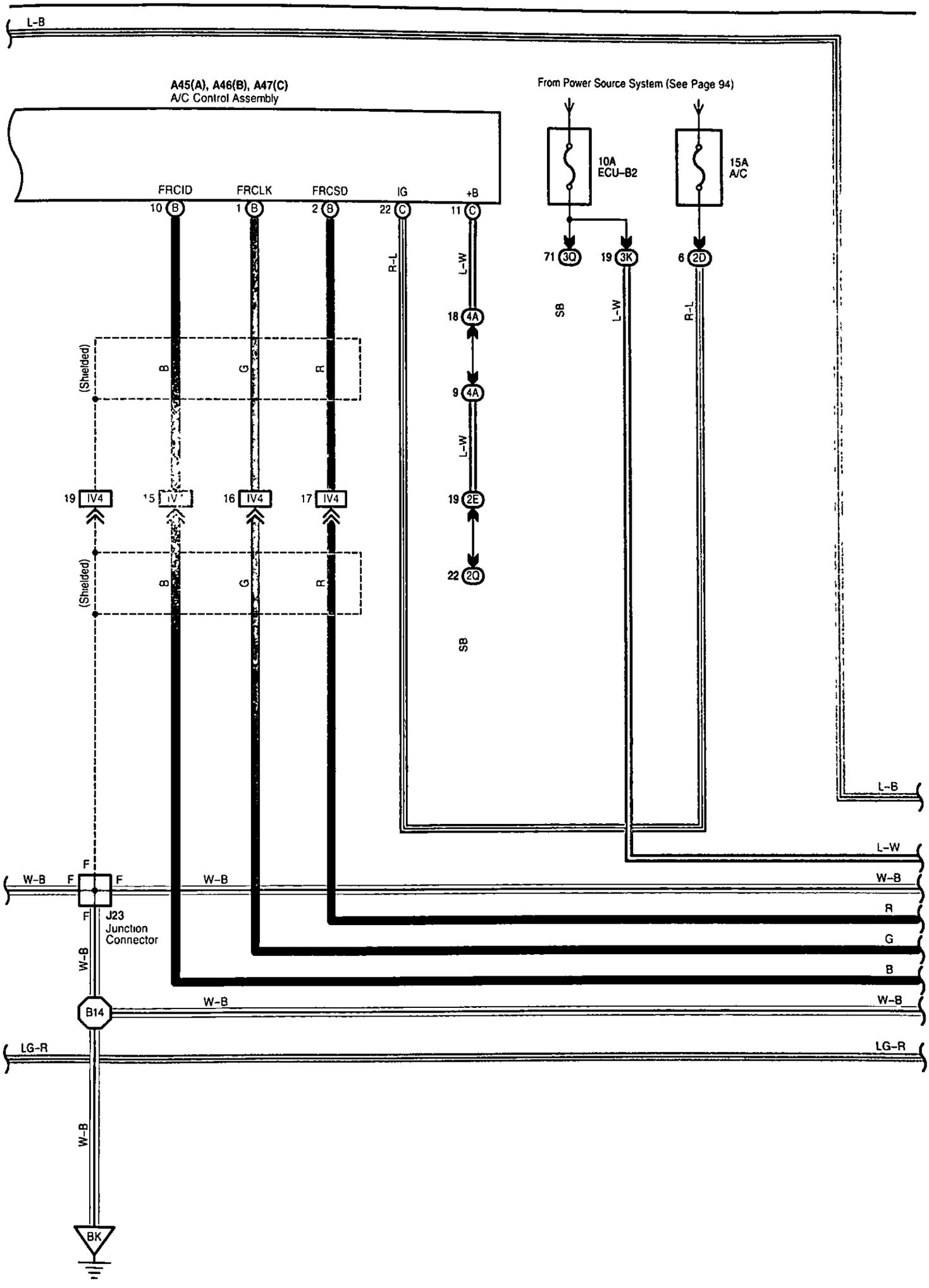
L-B
A45(A), A46(B), A47(C)
A/C Control Assembly
From Power Source System (See Page 94)
10A
ECU-B2
15A
A/C
FRCID
FRCLK
FRCSD
IG
+B
10 (B)
1 (B)
2 (B)
22 (C)
11 (C)
71 (3Q)
19 (3K)
6 (2D)
R-L
L-W
SB
18 (4A)
9 (4A)
19 (2E)
22 (2Q)
(Shielded)
B
G
R
19 IV4
15 IV4
16 IV4
17 IV4
W-B
F
J23
Junction
Connector
B14
LG-R
BK
L-B
L-W
R
G
B

Air Conditioning (Rear)

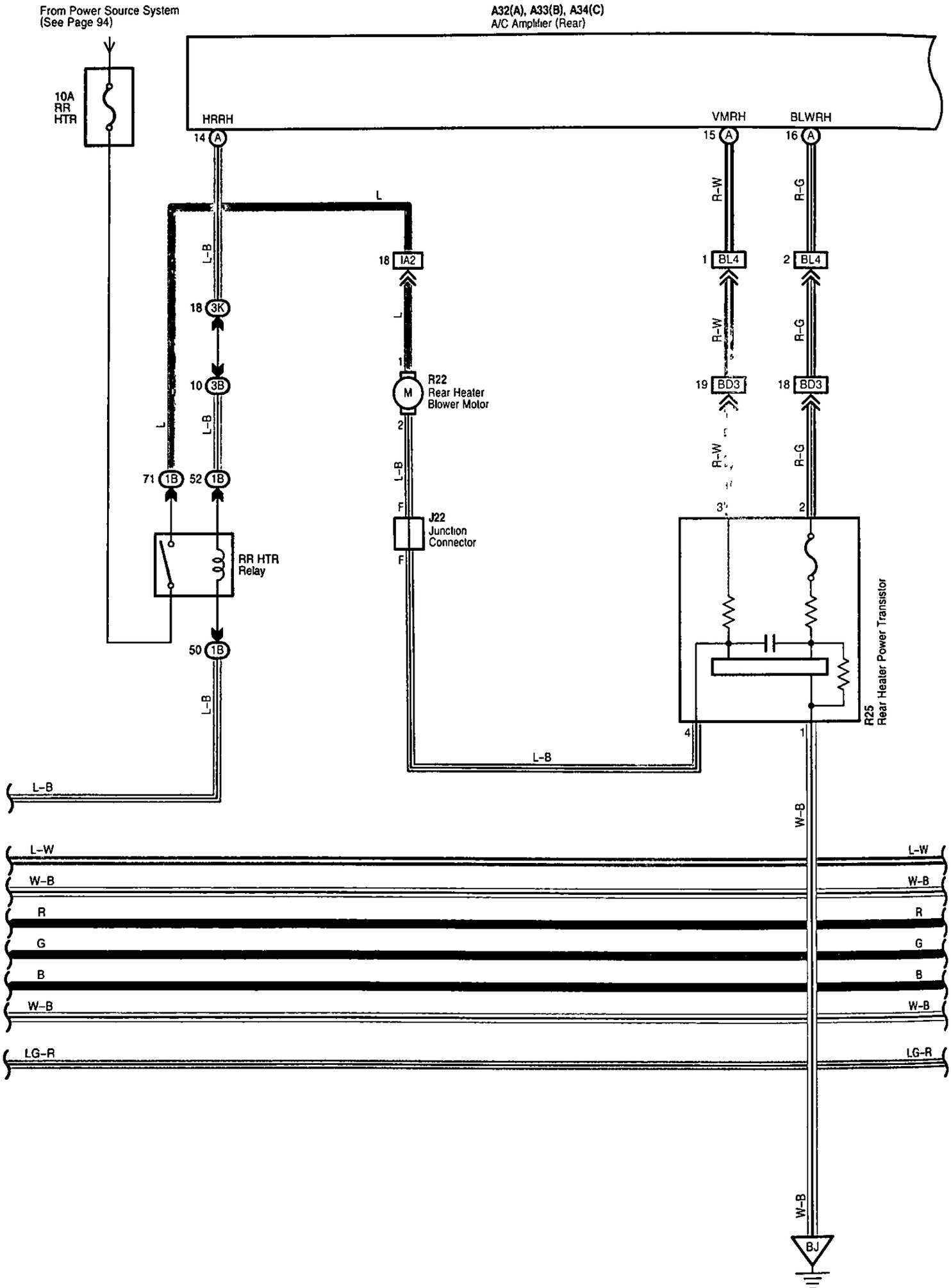

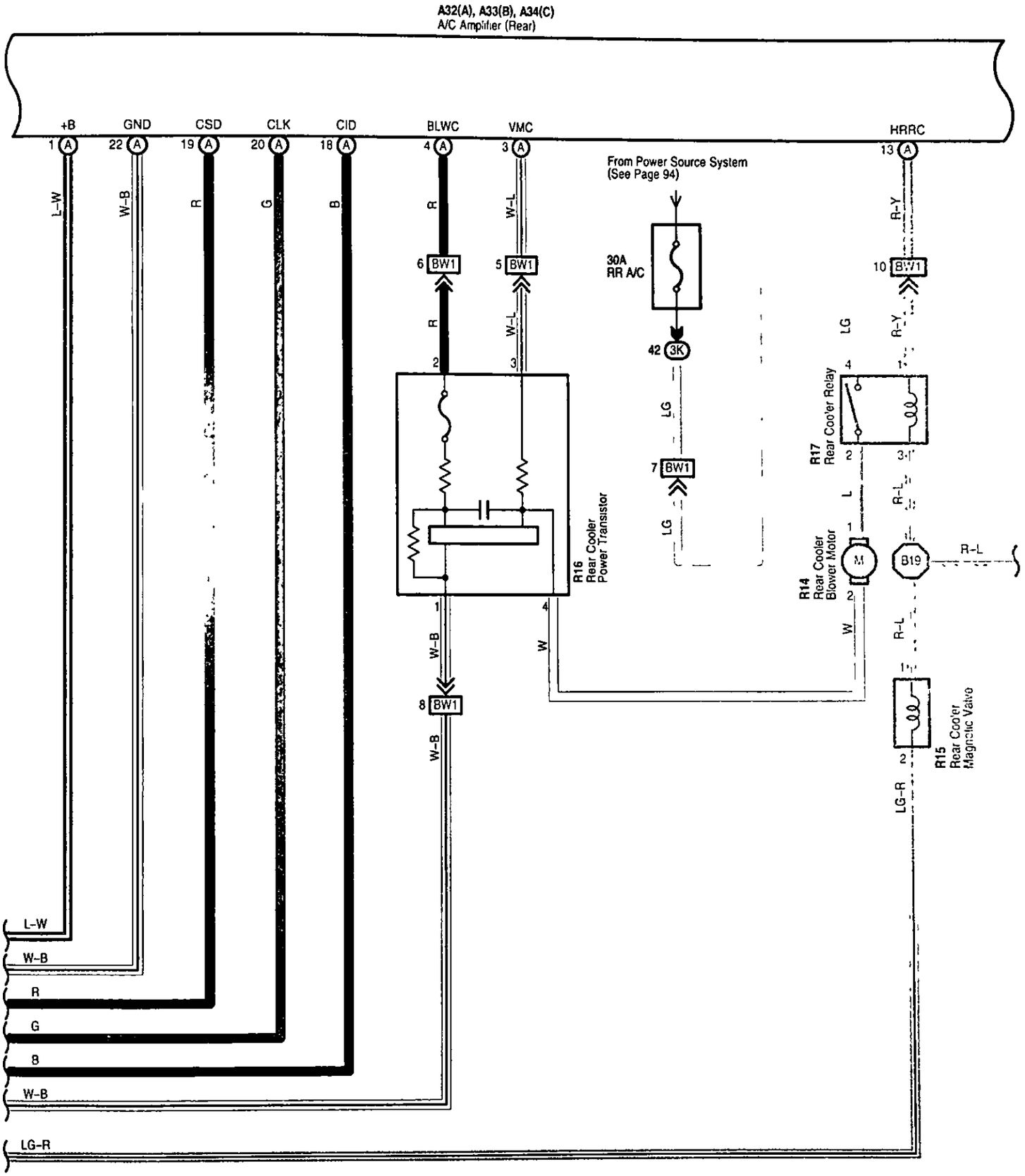
A32(A), A33(B), A34(C)
A/C Amplifier (Rear)
+B
GND
CSD
CLK
CID
BLWC
VMC
HRRC
From Power Source System
(See Page 94)
30A
RR A/C
R16
Rear Cooler
Power Transistor
R17
Rear Cooler Relay
R14
Rear Cooler
Blower Motor
R15
Rear Cooler
Magnetic Valve
B19
L-W
W-B
R
G
B
LG-R

Air Conditioning (Rear)

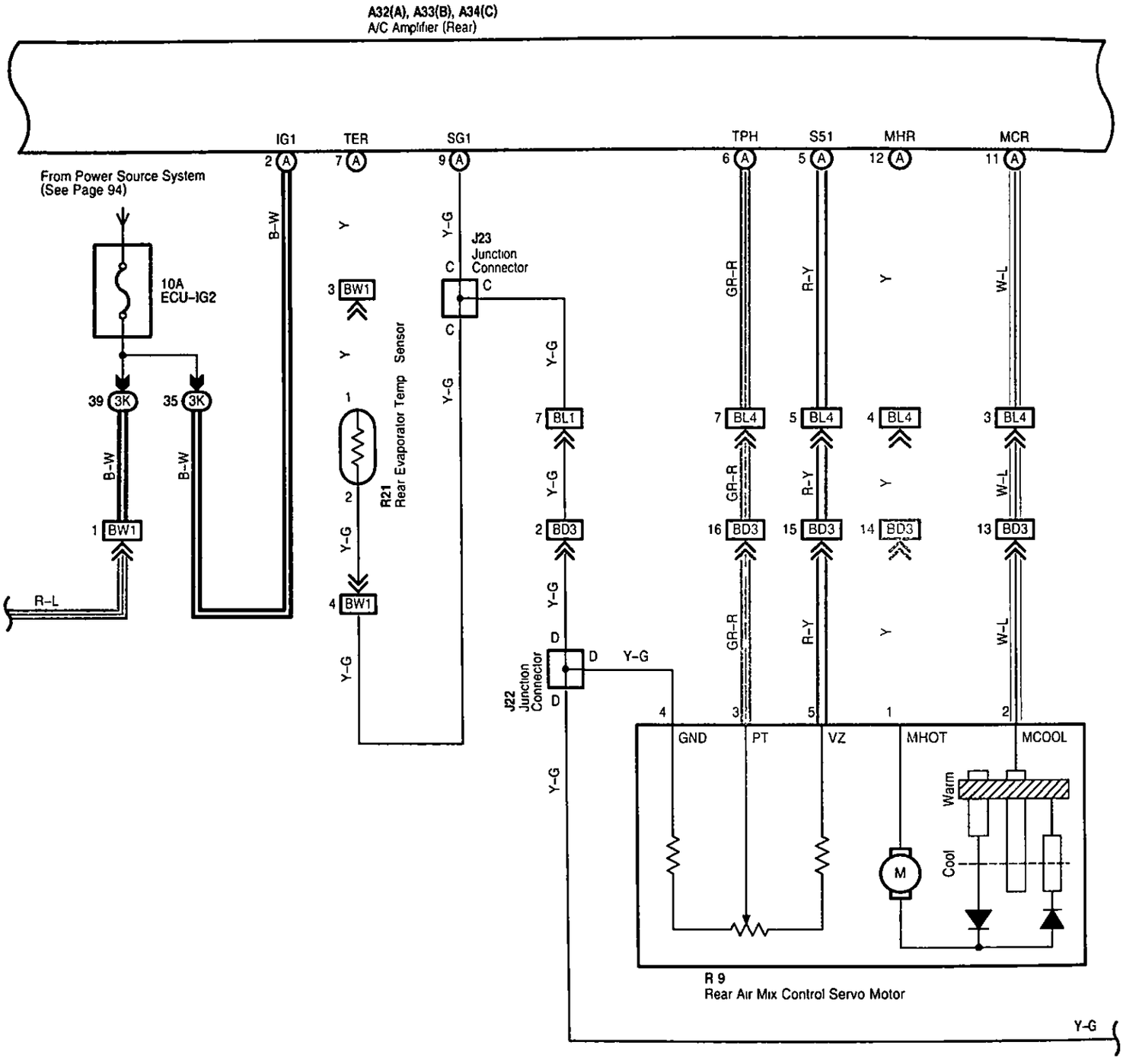

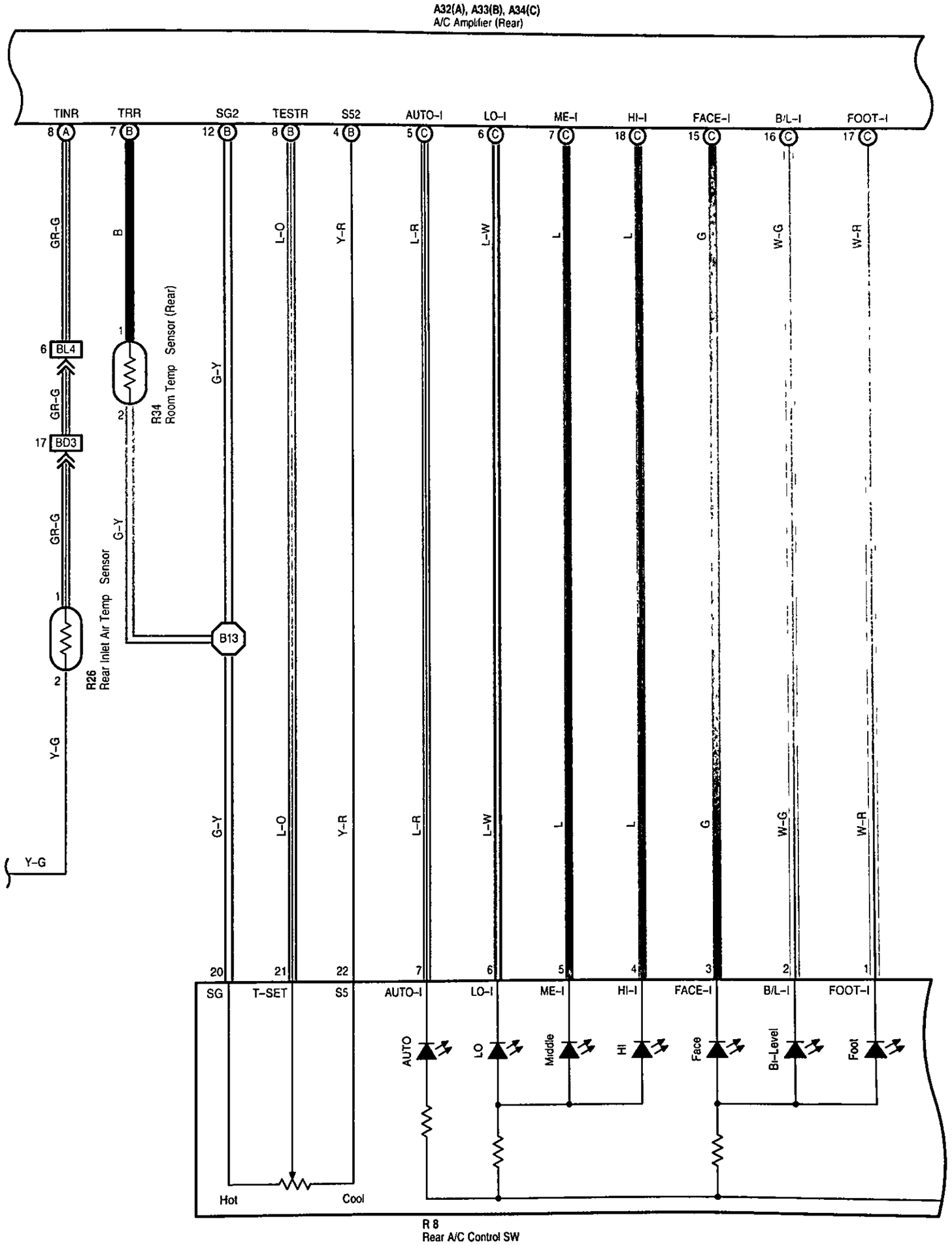
A32(A), A33(B), A34(C)
A/C Amplifier (Rear)
TINR
TRR
SG2
TESTR
S52
AUTO-I
LO-I
ME-I
HI-I
FACE-I
B/L-I
FOOT-I
8 A
7 B
12 B
8 B
4 B
5 C
6 C
7 C
18 C
15 C
16 C
17 C
GR-G
B
L-O
Y-R
L-R
L-W
L
L
G
W-G
W-R
6 BL4
GR-G
17 BD3
GR-G
1
2
R26
Rear Inlet Air Temp Sensor
G-Y
1
2
R34
Room Temp Sensor (Rear)
G-Y
B13
Y-G
Y-G
20
21
22
7
6
5
4
3
2
1
SG
T-SET
S5
AUTO-I
LO-I
ME-I
HI-I
FACE-I
B/L-I
FOOT-I
AUTO
LO
Middle
HI
Face
Bi-Level
Foot
Hot
Cool
R 8
Rear A/C Control SW

Air Conditioning (Rear)

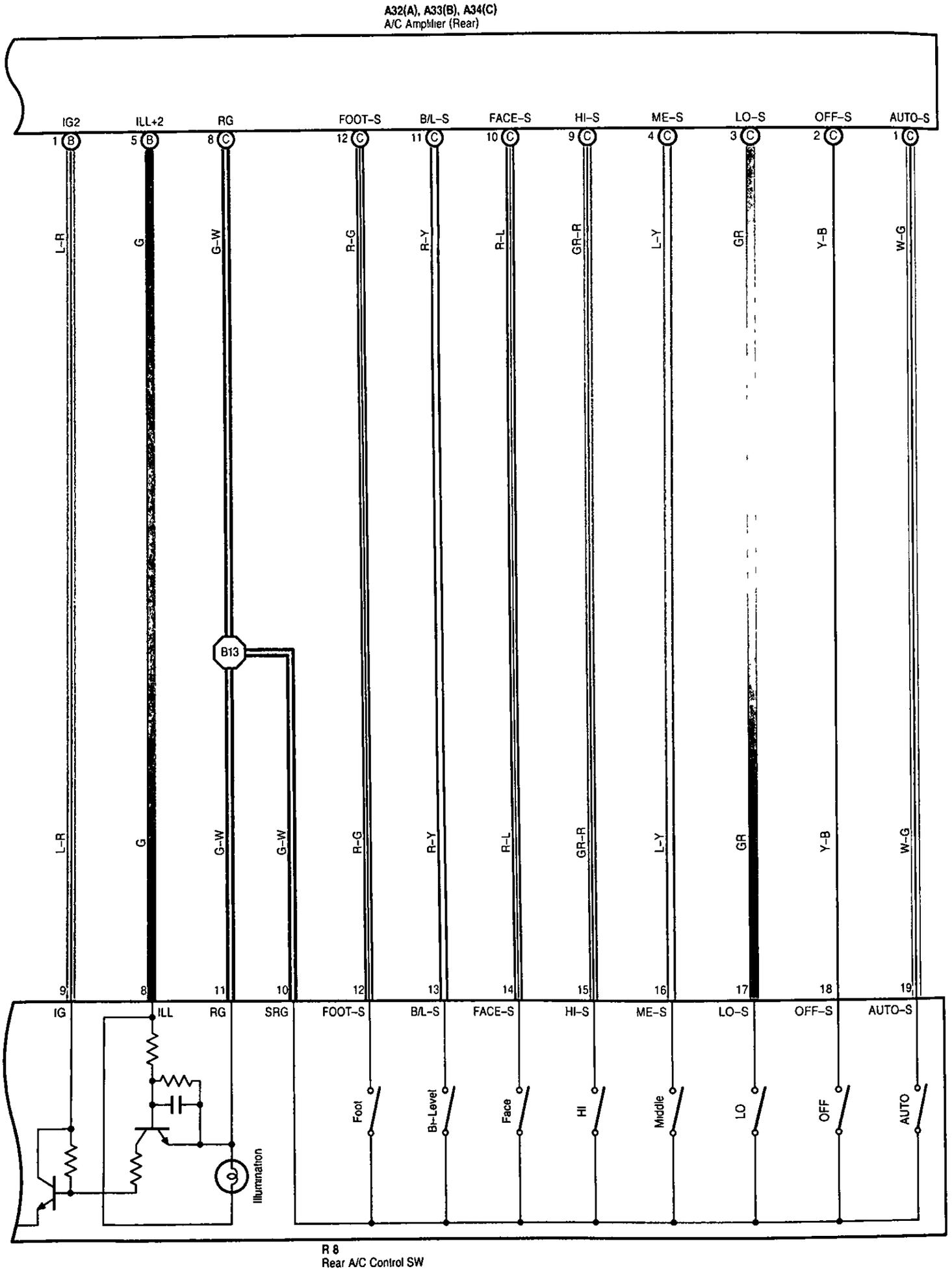

System Outline

1. Cooler and Heater Blower Operation

* Manual operation
  When the blower control SW in the rear A/C control SW is set to any blower speed, a signal is sent to the A/C amplifier. The A/C amplifier controls the power transistor and operates the rear cooler blower motor and rear heater blower motor at the set speed.
* Auto operation
  When the auto SW in the rear A/C control SW is operated, a signal is sent to the A/C amplifier. The A/C amplifier controls the power transistor according to the signals from respective sensors, and operates the rear cooler blower motor and rear heater blower motor.

2. Air Mix Control Servo Motor Control

When the temperature control lever in the rear A/C control SW is operated, a signal is sent to the A/C amplifier. The A/C amplifier controls the rear air mix control servo motor to operate the damper until it reaches the temperature set by the temperature control lever.

3. Air Conditioning Operation

The cooler and heater operation can be switched by the mode select SW in the rear A/C control SW.

Service Hints

A32 A/C Amplifier (Rear)

1-Ground : Always approx. 12 volts
2-Ground : Approx. 12 volts with ignition SW at ON or ST position
22-Ground . Always continuity

○ : Parts Location

Code		See Page	Code	See Page	Code	See Page
A32	A	72	J11	71	R17	73
A33	B	72	J22	72	R21	73
A34	C	72	J23	72	R22	73
A45	A	70	R8	73	R25	73
A46	B	70	R9	73	R26	73
A47	C	70	R14	73	R34	73
F16		68	R15	73		
I18		70	R16	73		

▭ : Junction Block and Wire Harness Connector

Code	See Page	Junction Block and Wire Harness (Connector Location)
1B	24	Engine Room No 2 Wire and Engine Room J/B (Engine Compartment Left)
2B	28	Engine Room No 2 Wire and Cowl Side J/B LH (Left Kick Panel)
2C		
2D	28	Dash Wire and Cowl Side J/B LH (Left Kick Panel)
2E		
2Q	30	Instrument Panel Integration Wire and Cowl Side J/B LH (Left Kick Panel)
3B	40	Engine Room No.2 Wire and Cowl Side J/B RH (Right Kick Panel)
3K	40	Floor No.2 Wire and Cowl Side J/B RH (Right Kick Panel)
3Q	42	Instrument Panel Integration Wire and Cowl Side J/B RH (Right Kick Panel)
4A	52	Dash Wire and J/B No.4 (Instrument Panel Center)
4C		
4F		

Air Conditioning (Rear)

: Connector Joining Wire Harness and Wire Harness

Code	See Page	Joining Wire Harness and Wire Harness (Connector Location)
IA2	78	Engine Room No 2 Wire and Floor No 1 Wire (Left Kick Panel)
IV4	82	Dash Wire and Floor No 2 Wire (Right Kick Panel)
BD3	86	Floor No 3 Wire and Floor No 1 Wire (Left Rear Side Quarter Panel)
BL1	88	Floor No 2 Wire and Floor No.3 Wire (Right Side of Rear Floor Crossmember)
BL4		
BW1	88	Floor No 2 Wire and A/C Sub Wire (Right Side Rear Quarter Panel)

: Ground Points

Code	See Page	Ground Points Location
IF	78	Set Bolt of Cowl Side J/B LH
BJ	86	Under the Driver's Seat
BK	86	Front Side Under the Front Passenger's Seat

: Splice Points

Code	See Page	Wire Harness with Splice Points	Code	See Page	Wire Harness with Splice Points
B13	88	Roof Wire No.2 Wire	B19	88	A/C Sub Wire
B14	88	Floor No 2 Wire			

I GROUND POINT

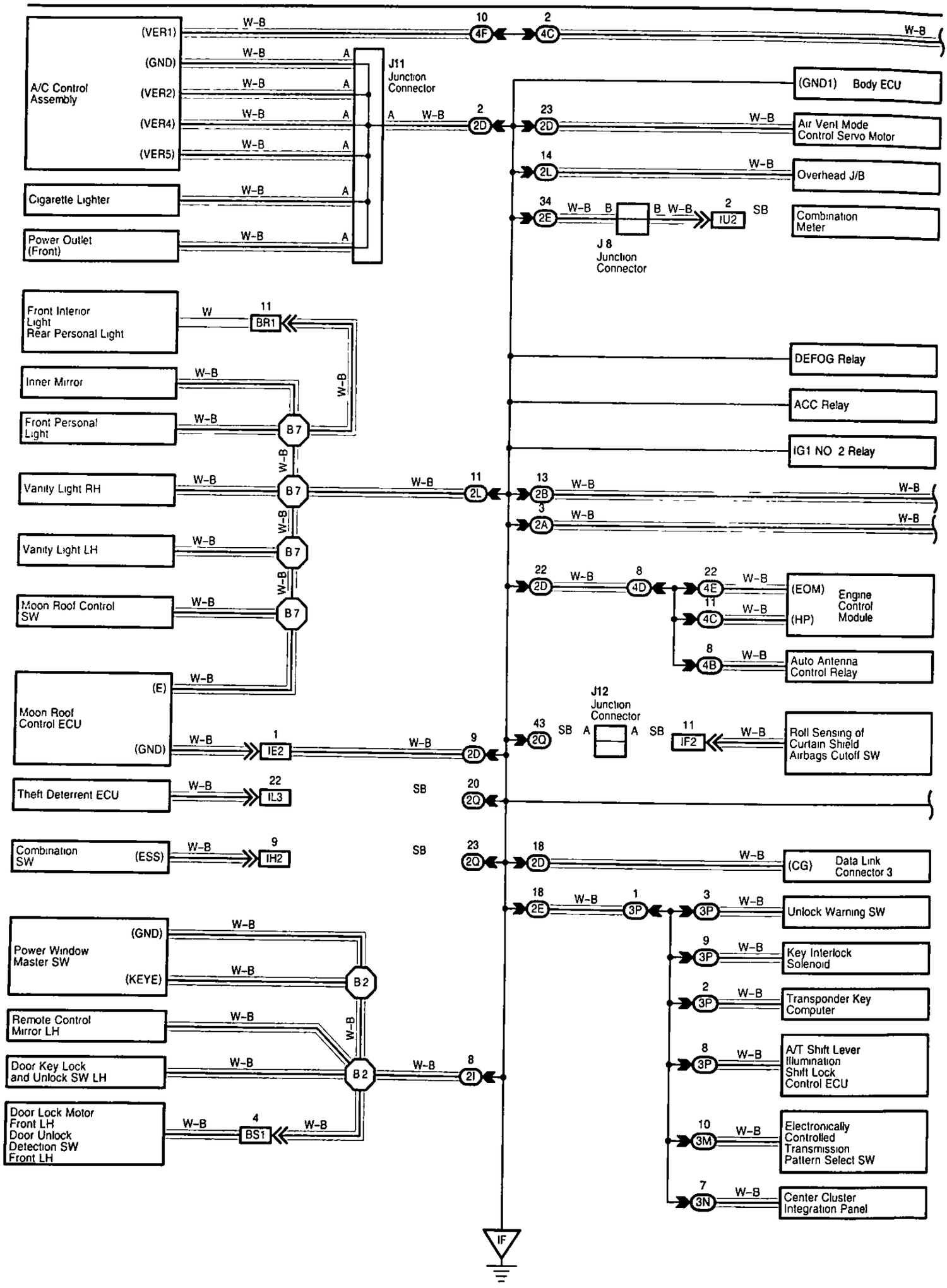

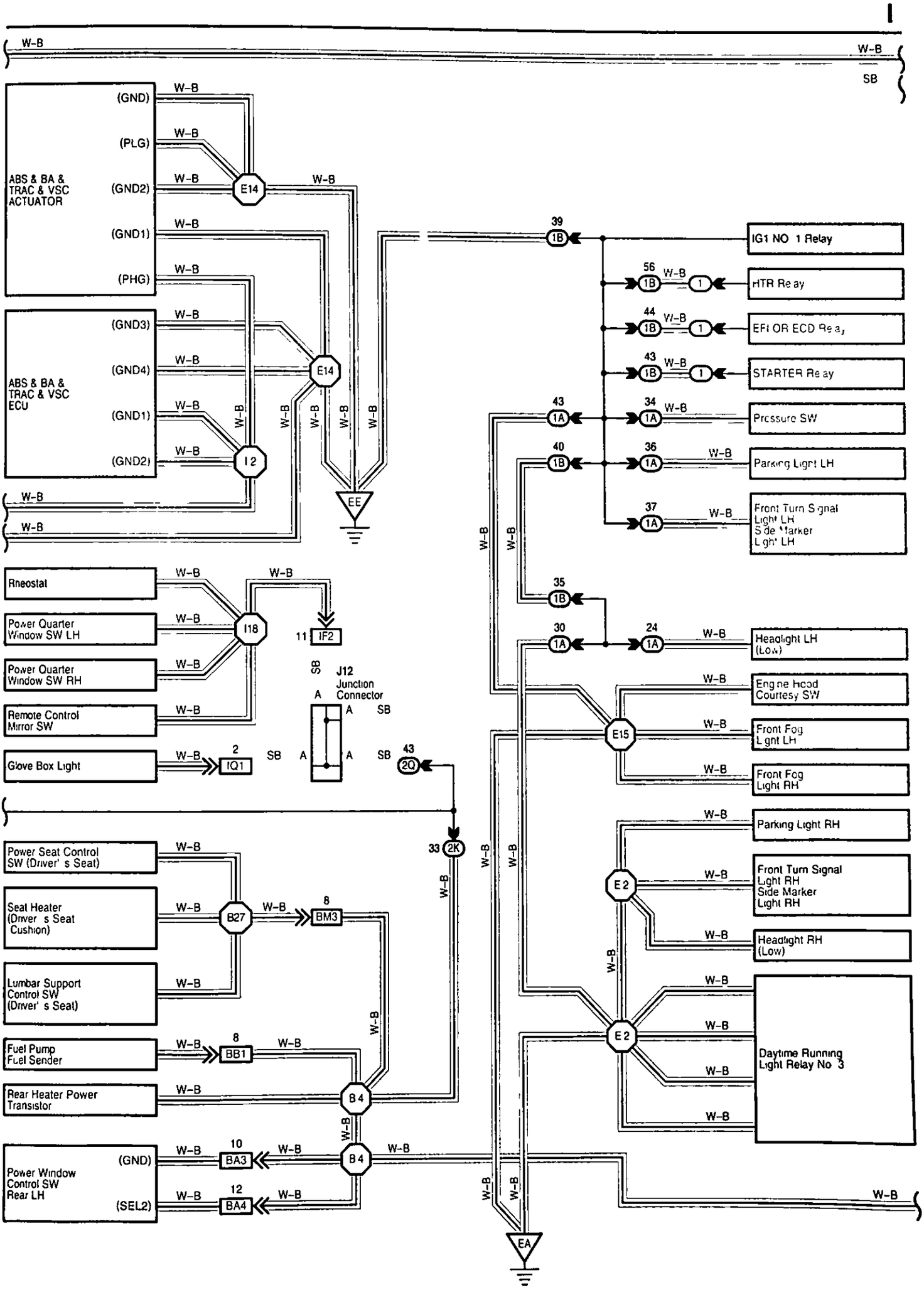
W-B
SB
ABS & BA & TRAC & VSC ACTUATOR
(GND)
(PLG)
(GND2)
(GND1)
(PHG)
E14
ABS & BA & TRAC & VSC ECU
(GND3)
(GND4)
(GND1)
(GND2)
I2
EE
39
1B
IG1 NO 1 Relay
56
HTR Relay
44
EFI OR ECD Relay
43
STARTER Relay
34
Pressure SW
40
36
Parking Light LH
37
Front Turn Signal Light LH
Side Marker Light LH
35
30
24
Headlight LH (Low)
Engine Hood Courtesy SW
E15
Front Fog Light LH
Front Fog Light RH
Parking Light RH
E2
Front Turn Signal Light RH
Side Marker Light RH
Headlight RH (Low)
Daytime Running Light Relay No. 3
Rheostat
Power Quarter Window SW LH
Power Quarter Window SW RH
Remote Control Mirror SW
Glove Box Light
I18
IF2
IQ1
J12
Junction Connector
2Q
33
2K
Power Seat Control SW (Driver's Seat)
Seat Heater (Driver's Seat Cushion)
Lumbar Support Control SW (Driver's Seat)
B27
BM3
Fuel Pump Fuel Sender
BB1
Rear Heater Power Transistor
B4
Power Window Control SW Rear LH
(SEL2)
BA3
BA4
EA

I GROUND POINT

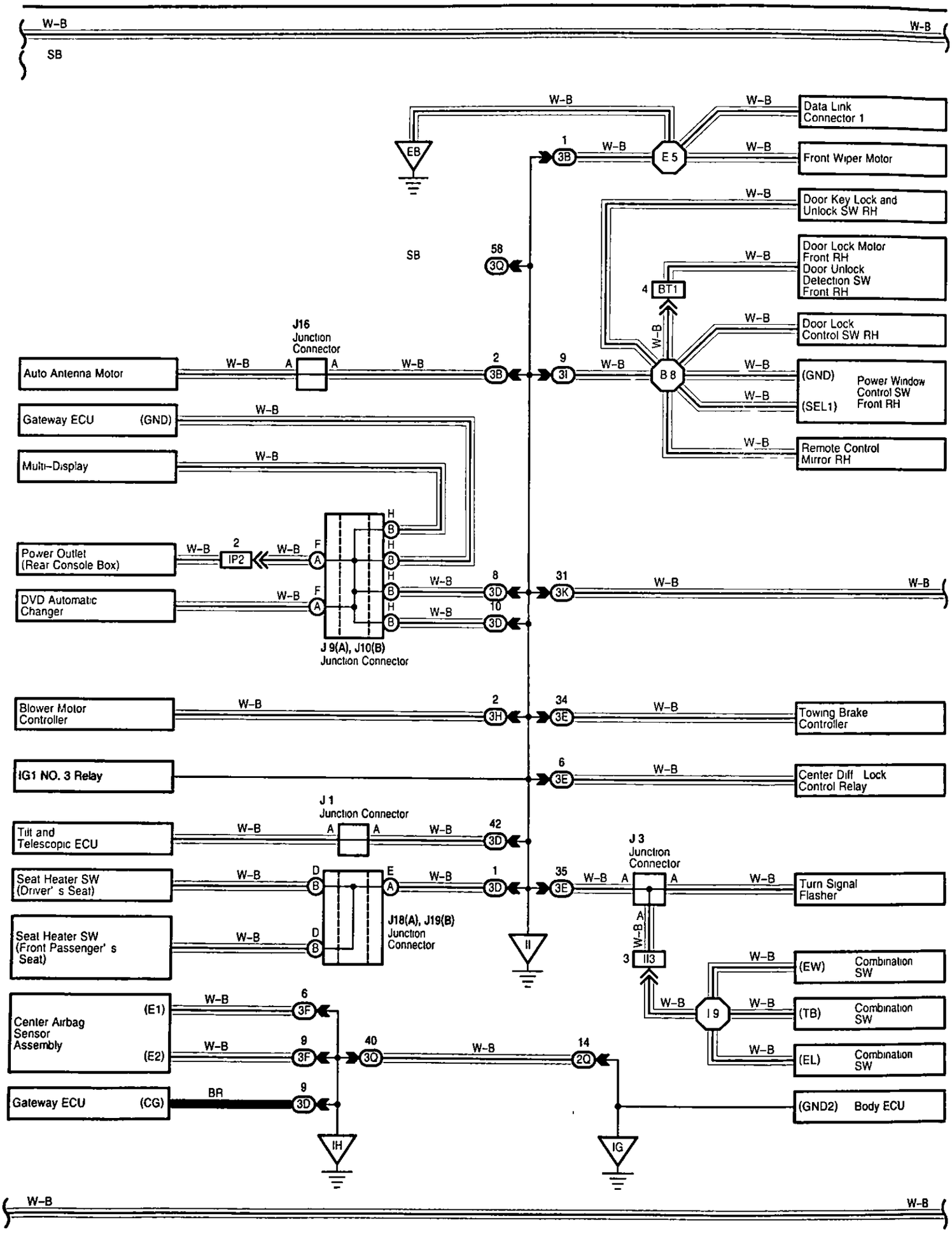

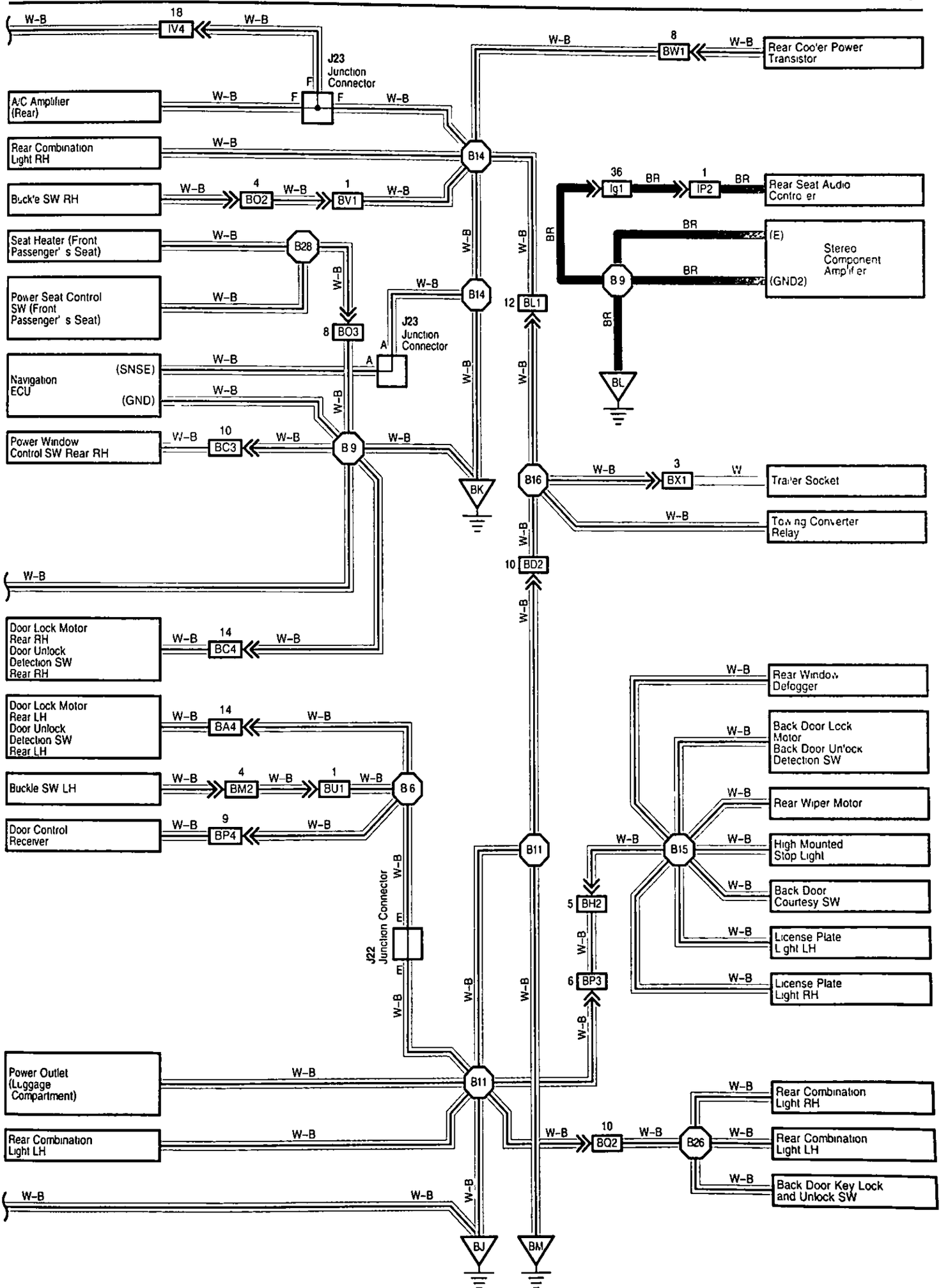
W-B
18
IV4
J23
Junction
Connector
A/C Amplifier
(Rear)
Rear Combination
Light RH
Buckle SW RH
BO2
BV1
Seat Heater (Front
Passenger's Seat)
B28
Power Seat Control
SW (Front
Passenger's Seat)
BO3
Navigation
ECU
(SNSE)
(GND)
Power Window
Control SW Rear RH
BC3
B9
B14
BK
8
BW1
Rear Cooler Power
Transistor
36
Ig1
BR
1
IP2
Rear Seat Audio
Control er
(E)
Stereo
Component
Amplifier
(GND2)
BL
12
BL1
B16
3
BX1
W
Trailer Socket
Towing Converter
Relay
10
BD2
Door Lock Motor
Rear RH
Door Unlock
Detection SW
Rear RH
BC4
14
Door Lock Motor
Rear LH
Door Unlock
Detection SW
Rear LH
BA4
Buckle SW LH
BM2
BU1
B6
Door Control
Receiver
9
BP4
J22
Junction Connector
E
B11
B15
5
BH2
6
BP3
Rear Window
Defogger
Back Door Lock
Motor
Back Door Unlock
Detection SW
Rear Wiper Motor
High Mounted
Stop Light
Back Door
Courtesy SW
License Plate
Light LH
License Plate
Light RH
Power Outlet
(Luggage
Compartment)
Rear Combination
Light LH
BQ2
B26
Rear Combination
Light RH
Rear Combination
Light LH
Back Door Key Lock
and Unlock SW
BJ
BM

I GROUND POINT

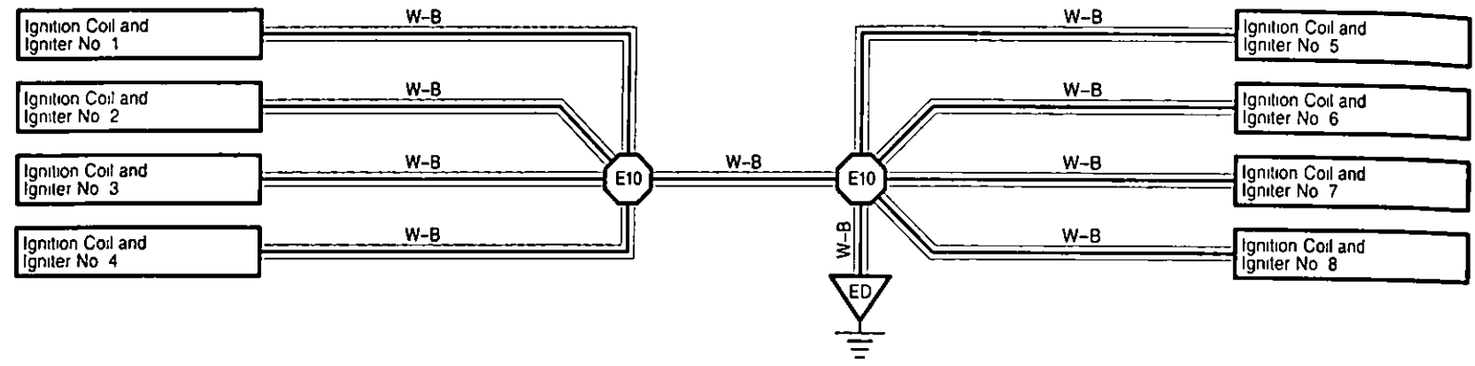

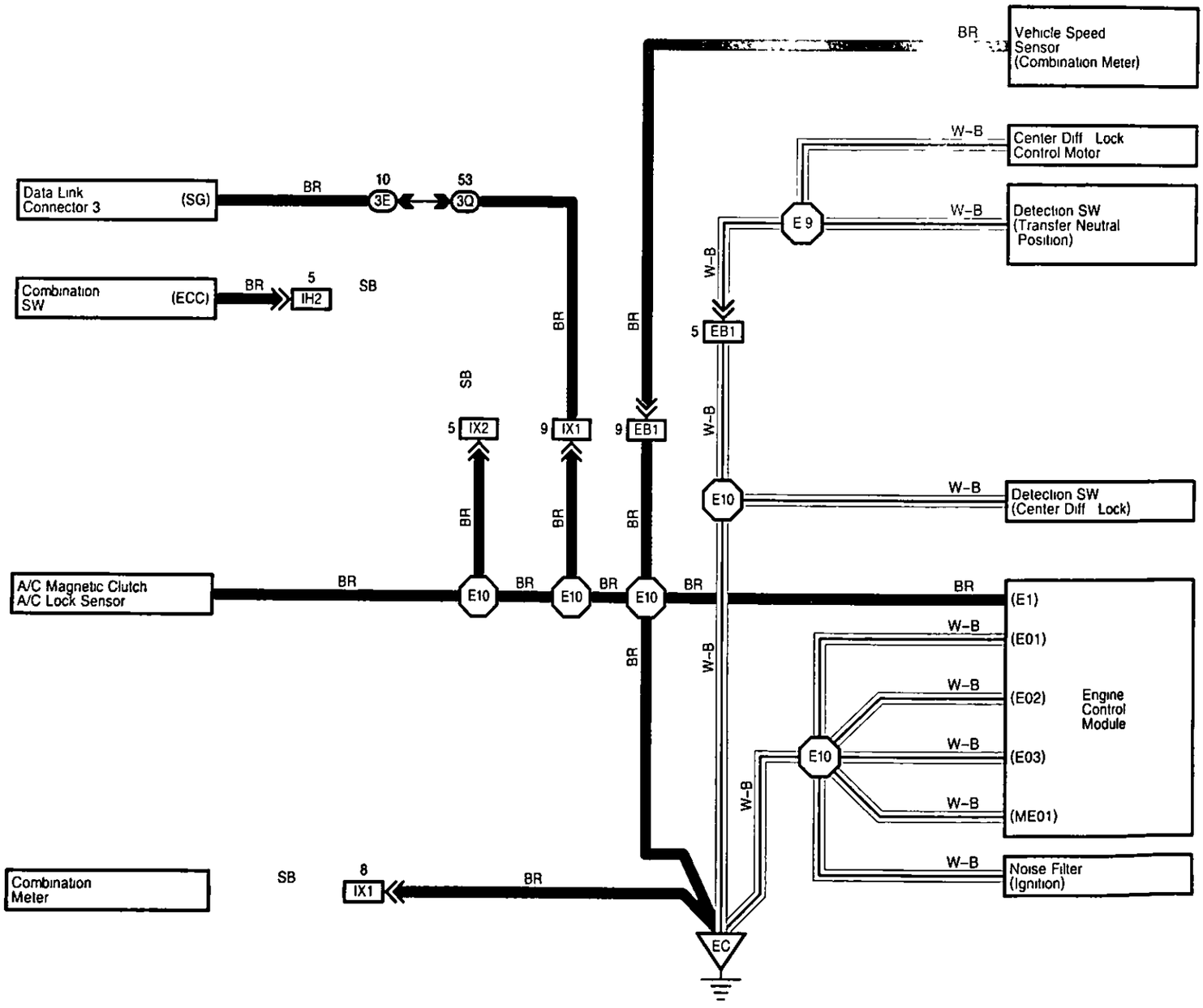

○ : Parts Location

Code	See Page	Code	See Page	Code	See Page
J1	71	J10 B	71	J18 A	71
J3	71	J11	71	J19 B	71
J8	71	J12	71	J22	72
J9 A	71	J16	71	J23	72

▭ : Relay Blocks

Code	See Page	Relay Blocks (Relay Block Location)
1	22	Engine Room R/B (Engine Compartment Left)

▭ : Junction Block and Wire Harness Connector

Code	See Page	Junction Block and Wire Harness (Connector Location)
1A	24	Engine Room Main Wire and Engine Room J/B (Engine Compartment Left)
1B	24	Engine Room No 2 Wire and Engine Room J/B (Engine Compartment Left)
2A	28	Engine Room No 2 Wire and Cowl Side J/B LH (Left Kick Panel)
2B		
2D	28	Dash Wire and Cowl Side J/B LH (Left Kick Panel)
2E		
2I	28	Front Door LH Wire and Cowl Side J/B LH (Left Kick Panel)
2K	28	Floor No 1 Wire and Cowl Side J/B LH (Left Kick Panel)
2L	28	Roof No 1 Wire and Cowl Side J/B LH (Left Kick Panel)
2Q	30	Instrument Panel Integration Wire and Cowl Side J/B LH (Left Kick Panel)
3B	40	Engine Room No 2 Wire and Cowl Side J/B RH (Right Kick Panel)
3D	40	Dash Wire and Cowl Side J/B RH (Right Kick Panel)
3E		
3F		
3H		
3I	40	Front Door RH Wire and Cowl Side J/B RH (Right Kick Panel)
3K	40	Floor No 2 Wire and Cowl Side J/B RH (Right Kick Panel)
3M	43	Dash Wire and Cowl Side J/B RH (Right Kick Panel)
3N		
3P		
3Q	42	Instrument Panel Integration Wire and Cowl Side J/B RH (Right Kick Panel)
4B	52	Dash Wire and J/B No 4 (Instrument Panel Center)
4C		
4D		
4E		
4F		

I GROUND POINT

□ : Connector Joining Wire Harness and Wire Harness

Code	See Page	Joining Wire Harness and Wire Harness (Connector Location)
EB1	76	Engine Wire and Transmission Wire (On the Transmission)
IE2	78	Dash Wire and Roof No 1 Wire (Left Kick Panel)
IF2	78	Instrument Panel Integration Wire and Instrument Panel Wire (Left Side of Instrument Panel)
IH2	80	Instrument Panel Integration Wire and Column Wire (Near the Ignition SW)
II3	80	Dash Wire and Column Wire (Near the Ignition SW)
IL3	80	Instrument Panel Integration Wire and Computer Wire (Instrument Panel Center)
IP2	80	Rear Console Box Wire and Dash Wire (Right Side of Rear Console)
IQ1	80	Instrument Panel Integration Wire and Lamp Wire (Behind the Glove Box)
IU2	82	Instrument Panel Integration Wire and Dash Wire (Behind the Glove Box)
IV4	82	Dash Wire and Floor No 2 Wire (Right Kick Panel)
IX1 IX2	82	Instrument Panel Integration Wire and Engine Wire (Behind the Glove Box)
Ig1	84	Dash Wire and Floor No 2 Wire (Right Side of Front Console)
BA3 BA4	86	Rear Door LH Wire and Floor No 1 Wire (Left Side of Center Pillar)
BB1	86	Floor No 1 Wire and Fuel Tank Wire (Near the Fuel Tank)
BC3 BC4	86	Rear Door RH Wire and Floor No 2 Wire (Right Side of Center Pillar)
BD2	86	Floor No 3 Wire and Floor No 1 Wire (Left Rear Side Quarter Panel)
BH2	86	Pillar No.1 Wire and Back Door Upper Wire (Left Side of Back Door)
BL1	88	Floor No.2 Wire and Floor No 3 Wire (Right Side of Rear Floor Crossmember)
BM2 BM3	90	Floor No.1 Wire and Front Seat LH Wire (Front Side Under the Driver's Seat)
BO2 BO3	90	Floor No.2 Wire and Front Seat RH Wire (Front Side Under the Front Passenger's Seat)
BP3 BP4	88	Pillar No 1 Wire and Floor No 1 Wire (Left Rear Side Quarter Panel)
BQ2	88	Back Door Lower Wire and Floor No 1 Wire (Left Rear Side Quarter Panel)
BR1	88	Roof No.3 Wire and Roof No 1 Wire (Front Side of Roof)
BS1	88	Door Lock LH Sub Wire and Front Door LH Wire (Front Door LH)
BT1	88	Door Lock RH Sub Wire and Front Door RH Wire (Front Door RH)
BU1	88	Floor No 1 Wire and Floor No 1 Wire (Near the Left Rear Suspension Support)
BV1	88	Floor No 2 Wire and Floor No 2 Wire (Near the Right Rear Suspension Support)
BW1	88	Floor No 2 Wire and A/C Sub Wire (Right Side Rear Quarter Panel)
BX1	88	Frame No 4 Wire and Floor No 3 Wire (Left Side of Rear Floor Crossmember)

▽ : Ground Points

Code	See Page	Ground Points Location
EA EB	76	Front Right Side of Fender Apron
EC	76	Rear Bank of Right Cylinder Head
ED	76	Rear Bank of Left Cylinder Head
EE	76	Front Left Side of Fender Apron
IF IG	78	Set Bolt of Cowl Side J/B LH
IH II	78	Set Bolt of Cowl Side J/B RH
BJ	86	Under the Driver's Seat
BK	86	Front Side Under the Front Passenger's Seat
BL	86	Rear Side Under the Front Passenger's Seat
BM	86	Left Rear Side Quarter Panel

: Splice Points

Code	See Page	Wire Harness with Splice Points	Code	See Page	Wire Harness with Splice Points
E2	76	Engine Room Main Wire	B6	88	Floor No 1 Wire
E5	76	Engine Room No 2 Wire	B7	88	Roof Wire
E9	76	Transmission Wire	B8	88	Front Door RH Wire
E10	76	Engine Wire	B9	88	Floor No 2 Wire
E14	76	Engine Room No 2 Wire	B11	88	Floor No 1 Wire
E15	76	Engine Room Main Wire	B14	88	Floor No 2 Wire
I2	80	Engine Room No 2 Wire	B15	88	Back Door Upper Wire
I9	80	Column Wire	B16	88	Floor No 3 Wire
I18	80	Instrument Panel Wire	B26	88	Back Door Lower Wire
B2	88	Front Door LH Wire	B27	90	Front Seat LH Wire
B4	88	Floor No 1 Wire	B28	90	Front Seat RH Wire

J POWER SOURCE (Current Flow Chart)

The chart below shows the route by which current flows from the battery to each electrical source (Fusible Link, Circuit Breaker, Fuse, etc.) and other Parts.

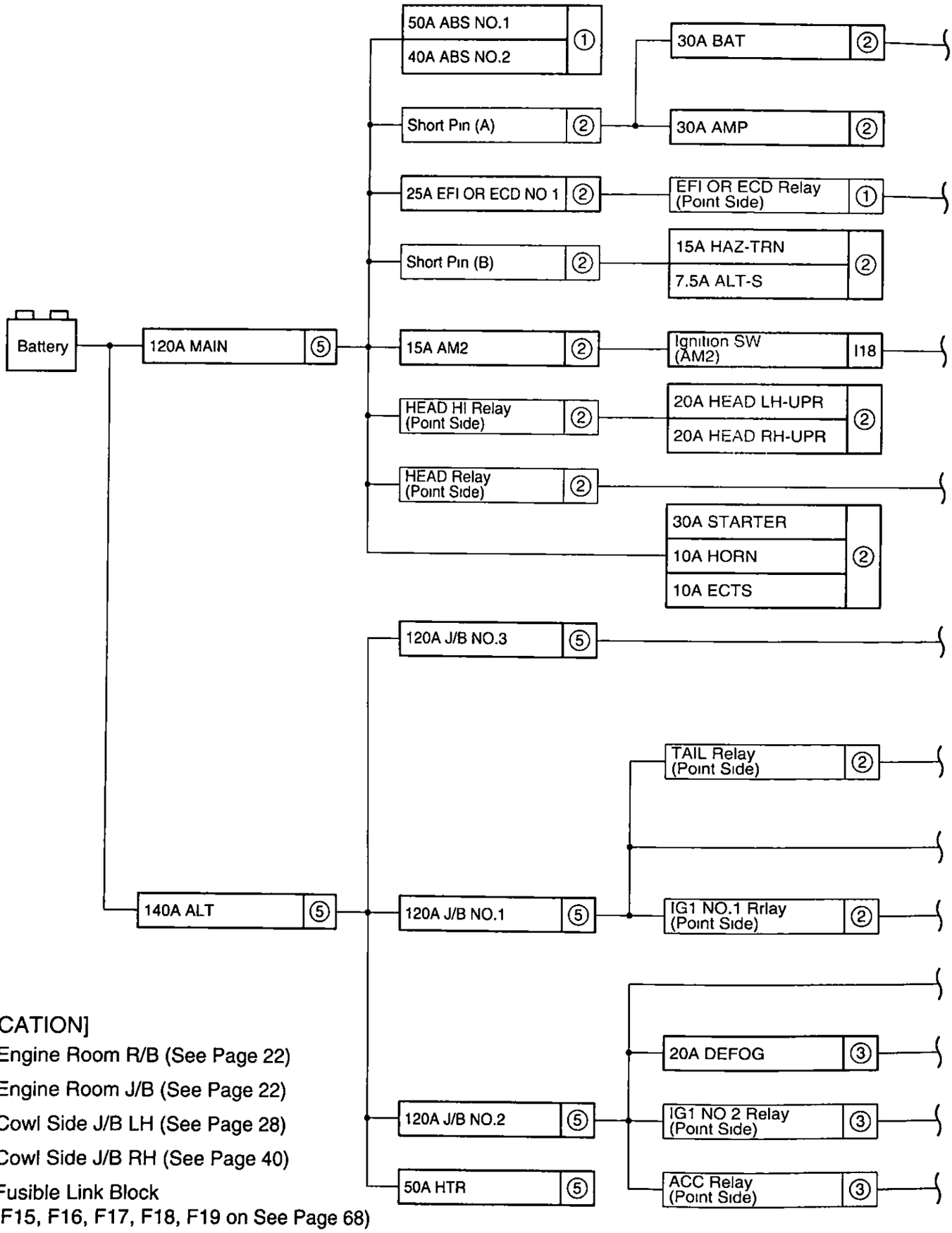

[LOCATION]

① : Engine Room R/B (See Page 22)

② : Engine Room J/B (See Page 22)

③ : Cowl Side J/B LH (See Page 28)

④ : Cowl Side J/B RH (See Page 40)

⑤ : Fusible Link Block
(F15, F16, F17, F18, F19 on See Page 68)

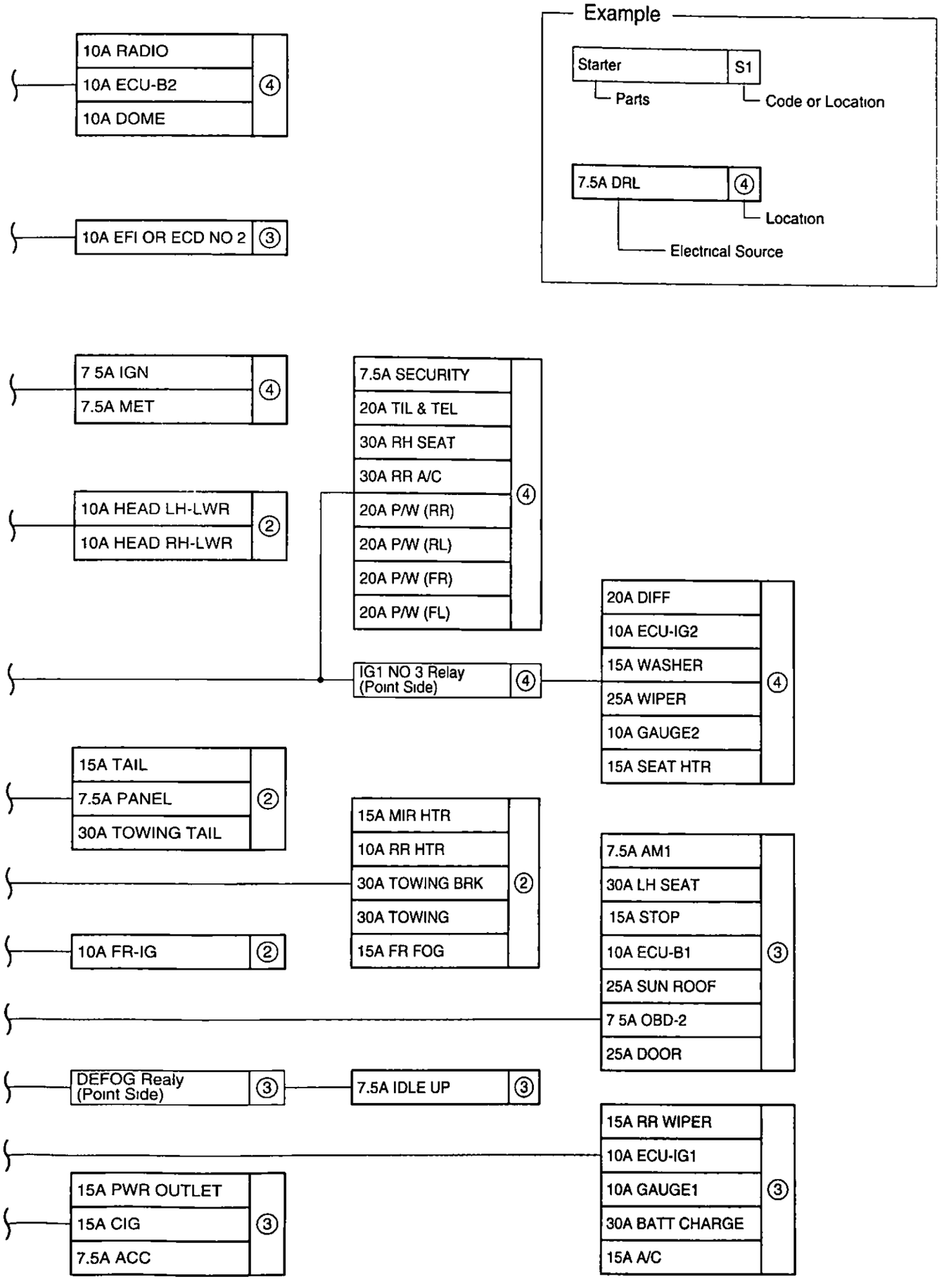
Example
Starter
S1
Parts
Code or Location
7.5A DRL
4
Location
Electrical Source
10A RADIO
10A ECU-B2
10A DOME
4
10A EFI OR ECD NO 2
3
7 5A IGN
7.5A MET
4
10A HEAD LH-LWR
10A HEAD RH-LWR
2
7.5A SECURITY
20A TIL & TEL
30A RH SEAT
30A RR A/C
20A P/W (RR)
20A P/W (RL)
20A P/W (FR)
20A P/W (FL)
4
IG1 NO 3 Relay
(Point Side)
4
20A DIFF
10A ECU-IG2
15A WASHER
25A WIPER
10A GAUGE2
15A SEAT HTR
4
15A TAIL
7.5A PANEL
30A TOWING TAIL
2
15A MIR HTR
10A RR HTR
30A TOWING BRK
30A TOWING
15A FR FOG
2
10A FR-IG
2
7.5A AM1
30A LH SEAT
15A STOP
10A ECU-B1
25A SUN ROOF
7 5A OBD-2
25A DOOR
3
DEFOG Realy
(Point Side)
3
7.5A IDLE UP
3
15A RR WIPER
10A ECU-IG1
10A GAUGE1
30A BATT CHARGE
15A A/C
3
15A PWR OUTLET
15A CIG
7.5A ACC
3

J POWER SOURCE (Current Flow Chart)

Engine Room R/B (See Page 22)

Fuse		System	Page
40A	ABS NO.2	VSC	228
50A	ABS NO.1	VSC	228

Engine Room J/B (See Page 22)

Fuse		System	Page
7.5A	ALT-S	Charging	104
7.5A	PANEL	Combination Meter	346
		Illumination	142
		Multiplex Communication System	172
10A	ETCS	Cruise Control	222
		Electronically Controlled Transmission and A/T Indicator	212
		Engine Control	108
10A	FR-IG	Charging	104
10A	HEAD LH-LWR	Front Fog Light	132
		Headlight	128
		Multiplex Communication System	172
10A	HEAD RH-LWR	Headlight	128
		Multiplex Communication System	172
10A	HORN	Horn	208
		Multiplex Communication System	172
		Theft Deterrent	282
10A	RR HTR	Air Conditioning (Rear)	362
15A	AM2	Automatic Light Control	164
		Engine Control	108
		Headlight	128
		Ignition	100
		Light Auto Turn Off	166
		Starting	98
		Theft Deterrent	282
15A	FR FOG	Front Fog Light	132
		Multiplex Communication System	172
15A	HAZ-TRN	Turn Signal and Hazard Warning Light	134
15A	MIR HTR	Mirror Heater	314
15A	TAIL	Automatic Light Control	164
		Light Auto Turn Off	166
		Multiplex Communication System	172
		Taillight	138
		Theft Deterrent	282
		Trailer Towing	158
20A	HEAD LH-UPR	Headlight	128
		Multiplex Communication System	172

* These are the page numbers of the first page on which the related system is shown.

Fuse		System	Page
20A	HEAD RH–UPR	Headlight	128
		Multiplex Communication System	172
25A	EFI OR ECD NO.1	Cruise Control	222
		Electronically Controlled Transmission and A/T Indicator	212
		Engine Control	108
30A	AMP	Radio and Player (w/ Navigation System)	324
		Radio and Player (w/o Navigation System)	330
30A	STARTER	Engine Control	108
		Starting	98
30A	TOWING	Trailer Towing	158
30A	TOWING BRK	Trailer Towing	158
30A	TOWING TAIL	Trailer Towing	158

Cowl Side J/B LH (See Page 28)

Fuse		System	Page
7.5A	ACC	Auto Antenna	322
		Automatic Light Control	164
		Combination Meter	346
		Door Lock Control	260
		Engine Control	108
		Headlight	128
		Interior Light	148
		Key Reminder	316
		Light Auto Turn Off	166
		Multi–Display (w/o Navigation System)	344
		Multiplex Communication System	172
		Navigation System	336
		Power Window	250
		Radio and Player (w/ Navigation System)	324
		Radio and Player (w/o Navigation System)	330
		Remote Control Mirror	302
		Theft Deterrent	282
		Wireless Door Lock Control	270
7.5A	AM1	Air Conditioning (Rear)	362
		Engine Control	108
		Mirror Heater	314
		Rear Window Defogger	312
		Shift Lock	244
7.5A	IDLE UP	Multiplex Communication System	172
		Rear Window Defogger	312
7.5A	OBD–2	Engine Control	108
10A	ECU–B1	Multi–Display (w/o Navigation System)	344
		Navigation System	336

* These are the page numbers of the first page on which the related system is shown.

J POWER SOURCE (Current Flow Chart)

Fuse		System	Page
10A	ECU-IG1	Automatic Glare-Resistant EC Mirror with Compass	304
		Automatic Light Control	164
		Door Lock Control	260
		Headlight	128
		Interior Light	148
		Key Reminder	316
		Light Auto Turn Off	166
		Moon Roof	256
		Multi-Display (w/o Navigation System)	344
		Multiplex Communication System	172
		Navigation System	336
		Power Window	250
		Shift Lock	244
		Theft Deterrent	282
		VSC	228
		Wireless Door Lock Control	270
10A	EFI OR ECD NO.2	Engine Control	108
10A	GAUGE1	Air Conditioning (Front)	352
		Center Differential Lock	246
		Combination Meter	346
		Cruise Control	222
		Electronically Controlled Transmission and A/T Indicator	212
		Engine Control	108
		Illumination	142
		Key Reminder	316
		Multiplex Communication System	172
		Navigation System	336
		Power Rear Quarter Window	306
		Seat Belt Warning	320
15A	A/C	Air Conditioning (Front)	352
		Air Conditioning (Rear)	362
		Seat Belt Warning	320
15A	CIG	Cigarette Lighter	204
15A	PWR OUTLET	Power Outlet	206
15A	RR WIPER	Rear Wiper and Washer	200
15A	STOP	Cruise Control	222
		Electronically Controlled Transmission and A/T Indicator	212
		Engine Control	108
		Multiplex Communication System	172
		Shift Lock	244
		Stop Light	156
		Trailer Towing	158
		VSC	228
20A	DEFOG	Rear Window Defogger	312

* These are the page numbers of the first page on which the related system is shown.

Fuse		System	Page
25A	DOOR	Automatic Light Control	164
		Door Lock Control	260
		Headlight	128
		Interior Light	148
		Key Reminder	316
		Light Auto Turn Off	166
		Moon Roof	256
		Multiplex Communication System	172
		Power Window	250
		Theft Deterrent	282
		Wireless Door Lock Control	270
25A	SUN ROOF	Moon Roof	256
30A	BATT CHARGE	Trailer Towing	158
30A	LH SEAT	Power Seat	294

Cowl Side J/B RH (See Page 40)

Fuse		System	Page
7.5A	IGN	Cruise Control	222
		Electronically Controlled Transmission and A/T Indicator	212
		Engine Control	108
		Engine Immobiliser System	124
		SRS	237
		VSC	228
7.5A	MET	Center Differential Lock	246
		Charging	104
		Combination Meter	346
		Cruise Control	222
		Electronically Controlled Transmission and A/T Indicator	212
		Engine Control	108
		Multiplex Communication System	172
		Seat Belt Warning	320
		SRS	237
		VSC	228
7.5A	SECURITY	Multiplex Communication System	172
		Theft Deterrent	282
10A	DOME	Combination Meter	346
		Garage Door Opener	210
		Interior Light	148
		Multiplex Communication System	172
		Theft Deterrent	282
		Wireless Door Lock Control	270
10A	ECU-B2	Air Conditioning (Front)	352
		Air Conditioning (Rear)	362
		Automatic Light Control	164

* These are the page numbers of the first page on which the related system is shown.

J POWER SOURCE (Current Flow Chart)

Fuse		System	Page
10A	ECU-B2	Center Differential Lock	246
		Combination Meter	346
		Cruise Control	222
		Door Lock Control	260
		Electronically Controlled Transmission and A/T Indicator	212
		Engine Control	108
		Engine Immobiliser System	124
		Headlight	128
		Interior Light	148
		Key Reminder	316
		Light Auto Turn Off	166
		Multiplex Communication System	172
		Navigation System	336
		Power Tilt and Power Telescopic	298
		Power Window	250
		Seat Belt Warning	320
		Theft Deterrent	282
		VSC	228
		Wireless Door Lock Control	270
10A	ECU-IG2	Air Conditioning (Front)	352
		Air Conditioning (Rear)	362
		Auto Antenna	322
		Power Tilt and Power Telescopic	298
		Turn Signal and Hazard Warning Light	134
10A	GAUGE2	Back-Up Light	162
		Center Differential Lock	246
		Combination Meter	346
		Cruise Control	222
		Door Lock Control	260
		Electronically Controlled Transmission and A/T Indicator	212
		Engine Control	108
		Multiplex Communication System	172
		Navigation System	336
		Trailer Towing	158
		VSC	228
		Wireless Door Lock Control	270
10A	RADIO	Auto Antenna	322
		Navigation System	336
		Radio and Player (w/ Navigation System)	324
		Radio and Player (w/o Navigation System)	330
15A	SEAT HTR	Seat Heater	308
15A	WASHER	Front Wiper and Washer	196
		Rear Wiper and Washer	200
20A	DIFF	Center Differential Lock	246

* These are the page numbers of the first page on which the related system is shown.

Fuse		System	Page
20A	P/W (FL)	Door Lock Control	260
		Interior Light	148
		Multiplex Communication System	172
		Power Window	250
		Theft Deterrent	282
		Wireless Door Lock Control	270
20A	P/W (FR)	Multiplex Communication System	172
		Power Window	250
20A	P/W (RL)	Multiplex Communication System	172
		Power Window	250
20A	P/W (RR)	Multiplex Communication System	172
		Power Window	250
20A	TIL & TEL	Power Tilt and Power Telescopic	298
25A	WIPER	Front Wiper and Washer	196
30A	RH SEAT	Power Seat	294
30A	RR A/C	Air Conditioning (Rear)	362

Fusible Link Block (F15, F16, F17, F18, F19 on See Page 68)

Fuse		System	Page
50A	HTR	Air Conditioning (Front)	352
120A	J/B NO.1	Automatic Light Control	164
		Illumination	142
		Light Auto Turn Off	166
		Multiplex Communication System	172
		Taillight	138
		Theft Deterrent	282
120A	J/B NO.2	Air Conditioning (Rear)	362
		Engine Control	108
		Mirror Heater	314
		Rear Window Defogger	312
		Shift Lock	244
120A	J/B NO.3	Engine Control	108
120A	MAIN	Ignition	100
		Multiplex Communication System	172
		Starting	98
140A	ALT	Air Conditioning (Front)	352
		Air Conditioning (Rear)	362
		Automatic Light Control	164
		Charging	104
		Engine Control	108
		Illumination	142
		Light Auto Turn Off	166
		Mirror Heater	314
		Multiplex Communication System	172

* These are the page numbers of the first page on which the related system is shown.

J POWER SOURCE (Current Flow Chart)

Fuse		System	Page
140A	ALT	Rear Window Defogger	312
		Shift Lock	244
		Taillight	138
		Theft Deterrent	282

* These are the page numbers of the first page on which the related system is shown.

K CONNECTOR LIST

A 1
Black

A 4
Dark Gray

A 5
Gray

A12
Black

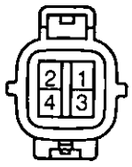

A13
Gray

A14
Black

A15
Yellow

A16
Yellow

A17

A18

A19

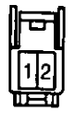

A24
Black

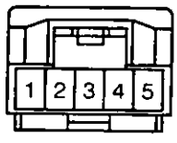

A25
Black

A26
Black

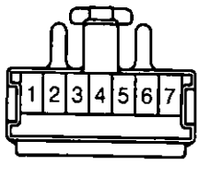

A27
Yellow

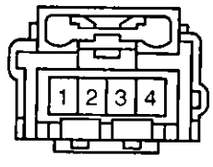

A28
Yellow

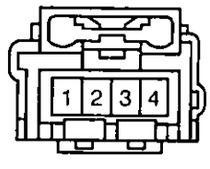

A29

A30

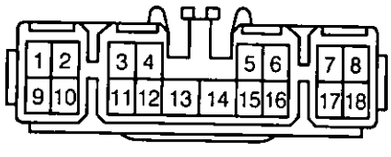

A31
Black

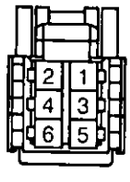

A32

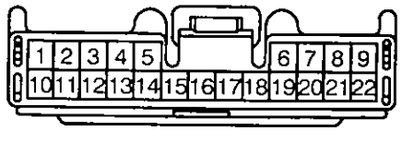

A33

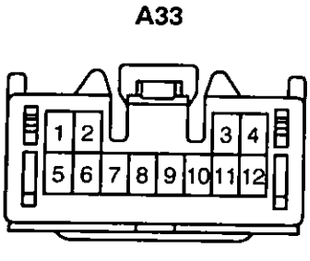

A34

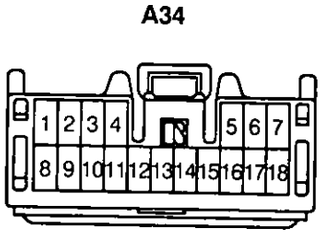

A35
Gray

A36
Gray

A37
Gray

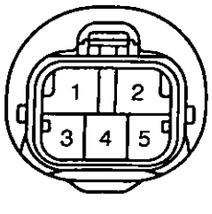

A38
Black

A39
Black

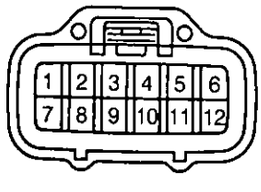

A40
Gray

A41

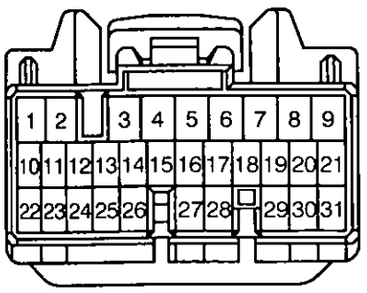

A42

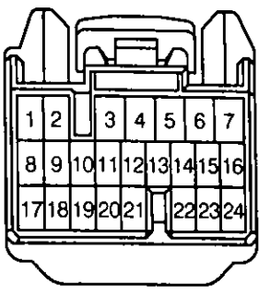

A43

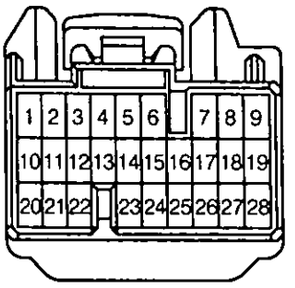

A44

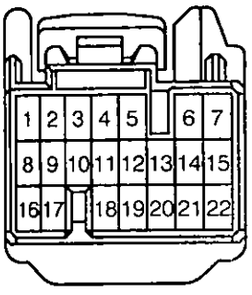

A45

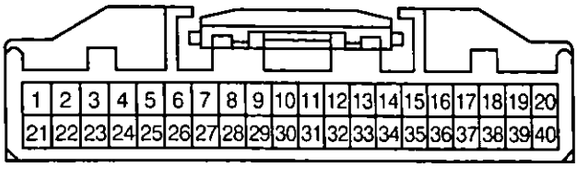

A46

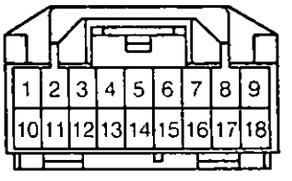

A47

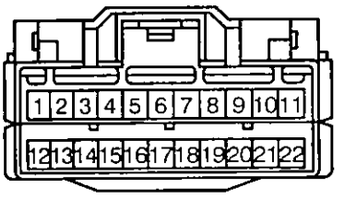

A48

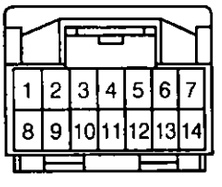

B 1
Black

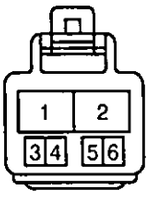

B 2

B 3

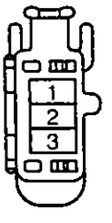

B 4
Black

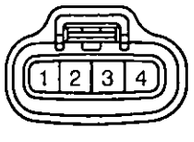

B 5

B 6
Gray

B 7

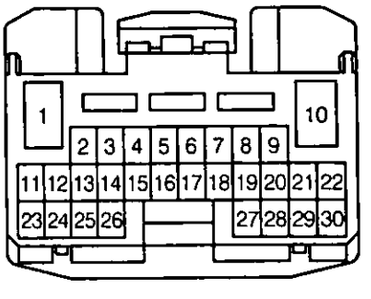

B 8

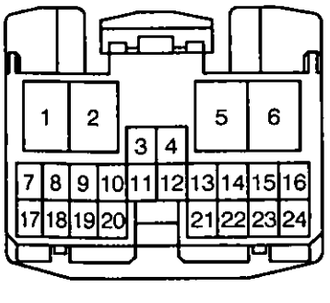

B 9

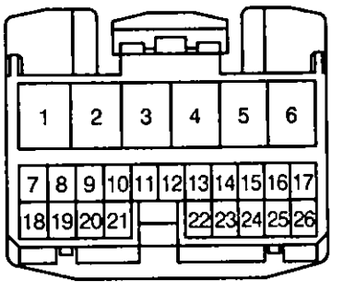

C 1
Dark Gray

C 2
Black

K CONNECTOR LIST

*1 : w/o Side Airbag

C 3
Dark Gray

C 5

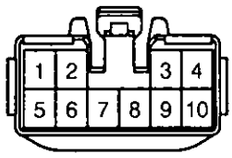

C10
Gray

C11
Gray

C12
Gray

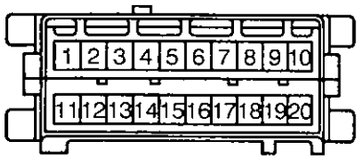

C13

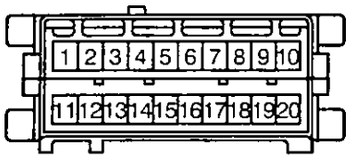

C14
Gray

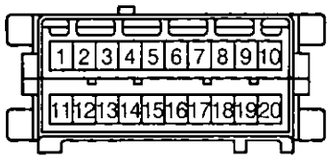

C15

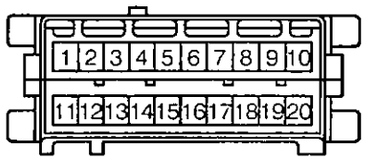

C16

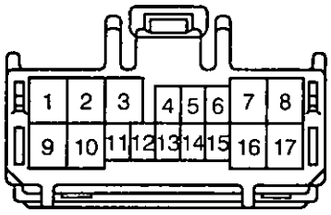

C17

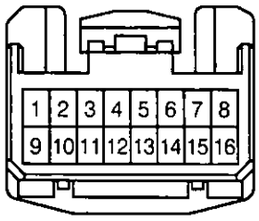

C18
Black

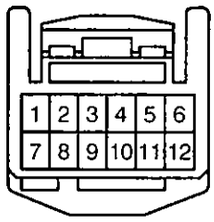

C19
Black

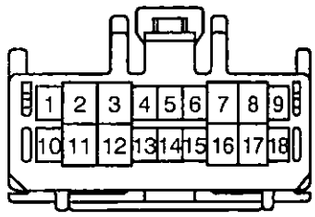

C25
(w/ Side Airbag) Yellow

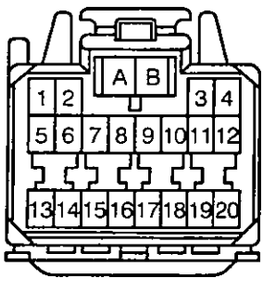

C25
(*1) Yellow

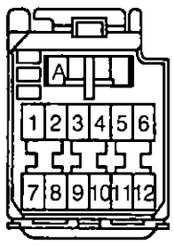

C26
Yellow

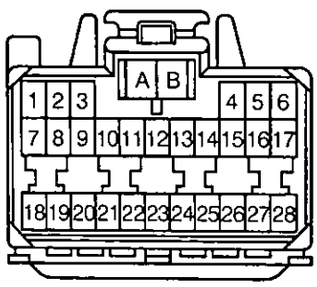

C27
(w/ Side Airbag) Yellow

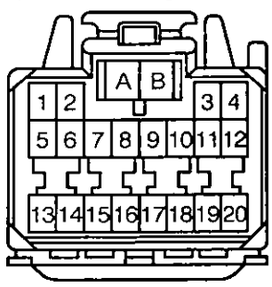

C27
(*1) Yellow

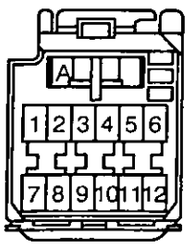

C28

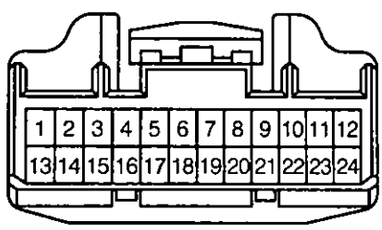

C29
Yellow

C30
Yellow

D 1
Black

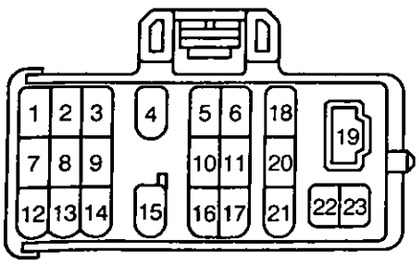

D 2
Black

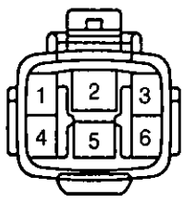

D 3
Black

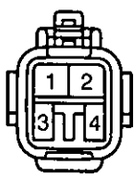

D 4
Gray

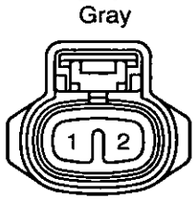

D 5
Gray

D 6
Gray

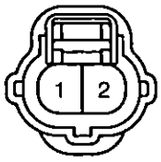

D 7

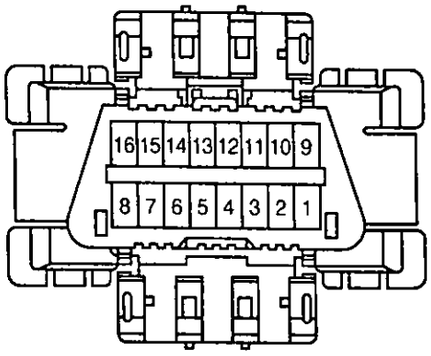

D10
Gray

D11
Gray

D12
Gray

D13
Gray

D14

D15

D16

D17

D18
Gray

D19
Gray

D20

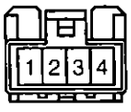

D21
Gray

D22
Gray

D23
Black

D24
Black

D26

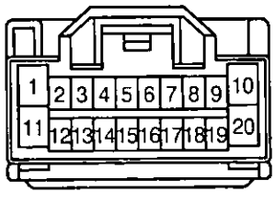

D27

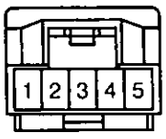

E 1
Gray

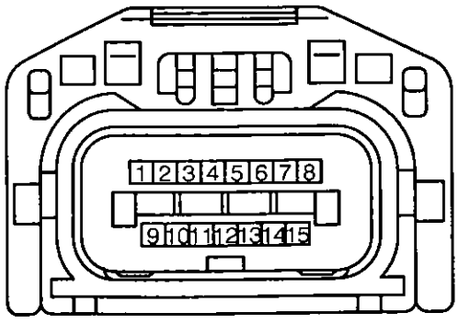

E 2
Black

E 3
Black

E 4

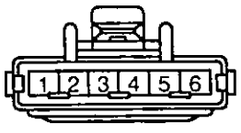

K CONNECTOR LIST

E 5

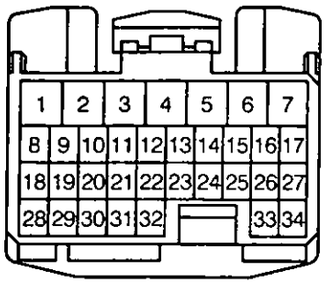

E 6

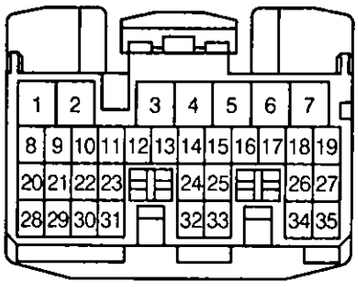

E 7

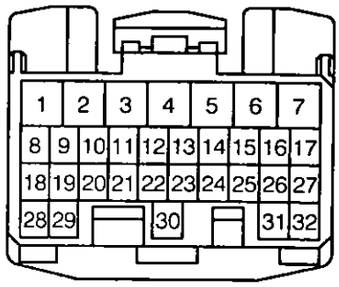

E 8

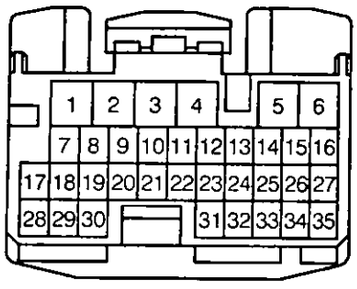

E 9

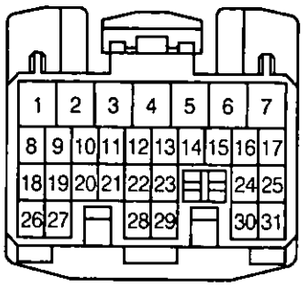

F 1
Brown

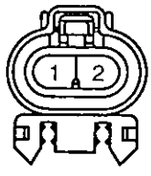

F 2
Brown

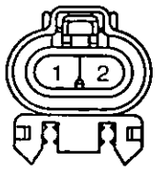

F 3
Gray

F 4
Gray

F 5
Black

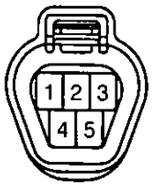

F 8

F 9

F10

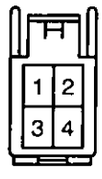

F11

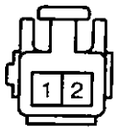

F12
Dark Gray

F14
Dark Gray

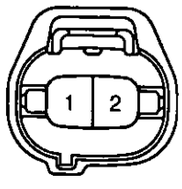

F15
Black

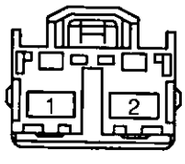

F16
Black

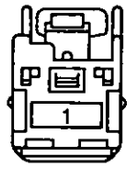

F17
Black

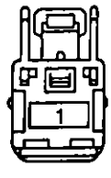

F18
Black

F19

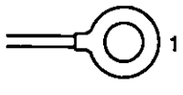

G 1
Black

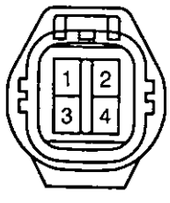

G 2

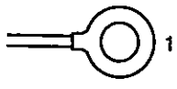

G 3

G 4
Gray

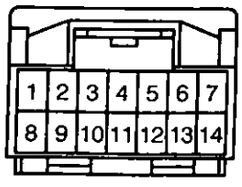

H 1
Black

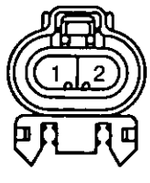

H 2
Brown

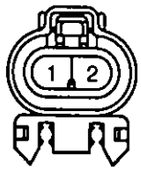

H 3
Black

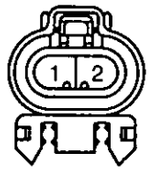

H 4
Brown

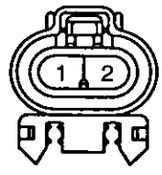

H 5
Dark Gray

H 6
Dark Gray

H 7
Dark Gray

H 8
Dark Gray

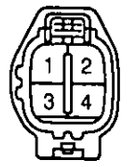

H 9
Black

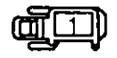

H10
Black

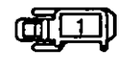

H11

I 1
Black

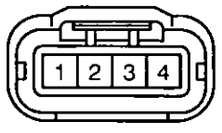

I 2
Black

I 3
Black

I 4
Black

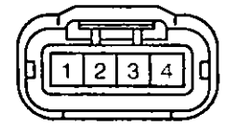

I 5
Black

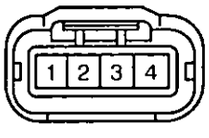

I 6
Black

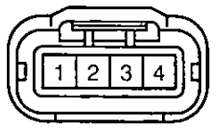

I 7
Black

I 8
Black

I 9
Blue

I10
Blue

I11
Blue

I12
Blue

I13
Blue

I14
Blue

I15
Blue

I16
Blue

I18

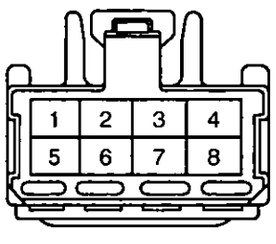

I22
Orange

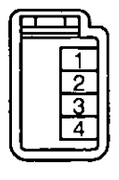

J 1
Black

J 2

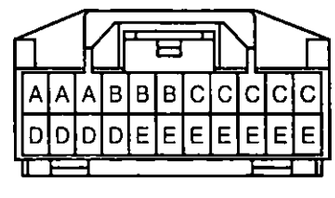

J 3
Black

J 4
Black

J 5
Blue

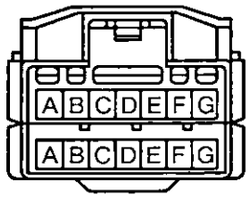

J 6
Gray

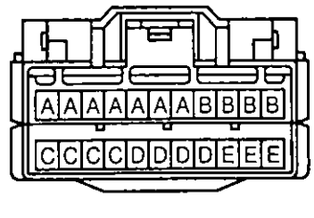

J 7

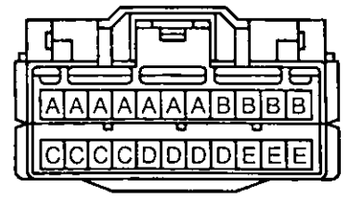

J 8

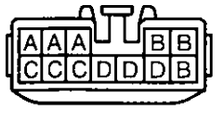

J 9

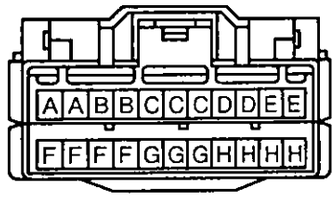

J10

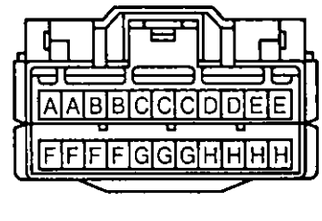

J11

K CONNECTOR LIST

J12
Gray

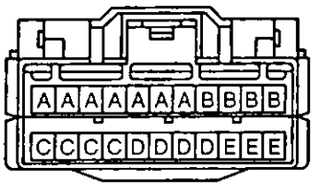

J13
Blue

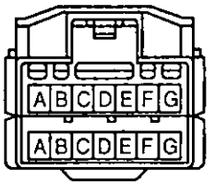

J14

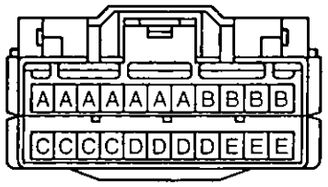

J15

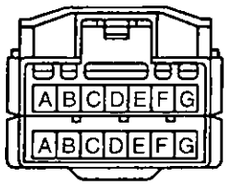

J16

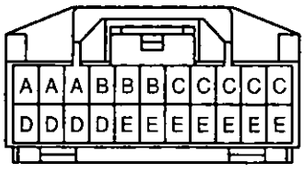

J17

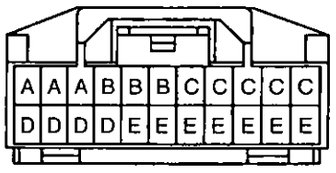

J18
Gray

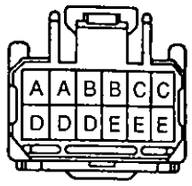

J19
Gray

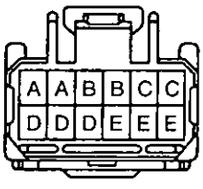

J20

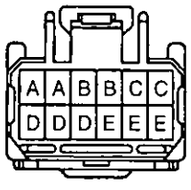

J21

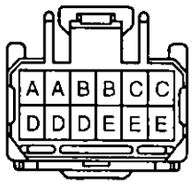

J22

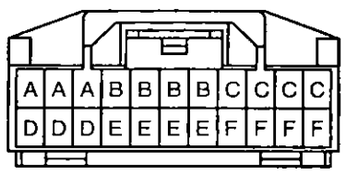

J23

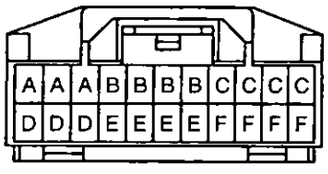

J24
Black

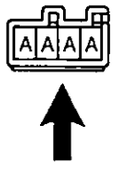

K 1
Dark Gray

K 2

K 3
Black

L 1

L 2

L 3

M 1
Black

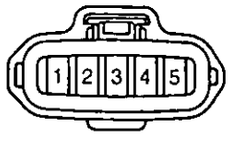

M 2

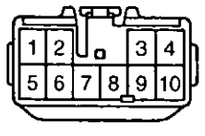

M 3

M 4
Gray

M 5

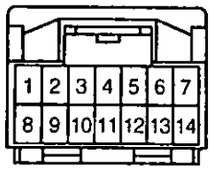

M 6

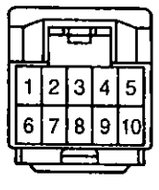

M 7

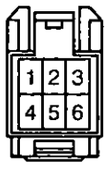

M 8

Correction to Pub.No. EWD510U(Bulletin No. OB-2195)

396

M 9

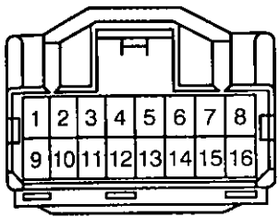

N 1
Gray

N 2

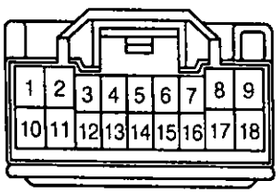

N 3

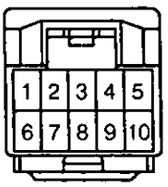

N 4

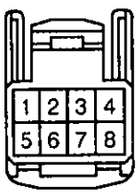

O 2
Black

O 5

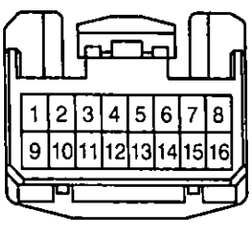

P 1
Gray

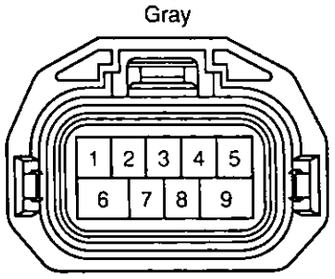

P 2
Gray

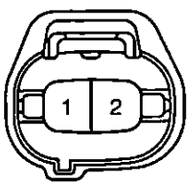

P 3
Gray

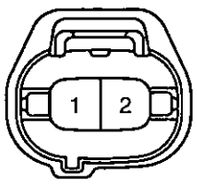

P 4

P 5

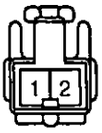

P 6
Black

P 7
Black

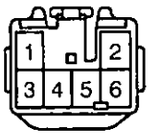

P 8

P 9

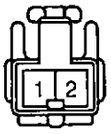

P10

P11

P12

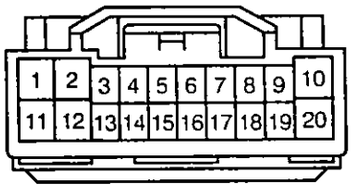

P14

P15

P16

P17

P18

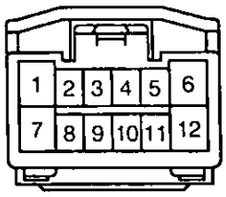

P19

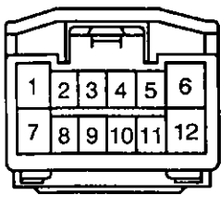

P20

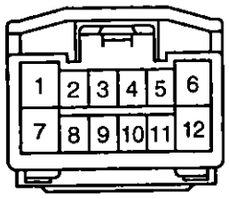

P21
Yellow

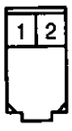

P22
Yellow

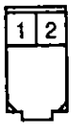

P23

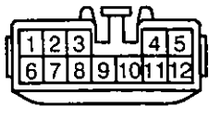

K CONNECTOR LIST

P24

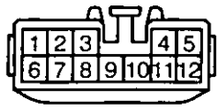

P25
Orange

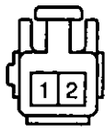

P26

P27
Blue

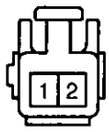

P28

P29

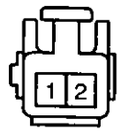

P30
Orange

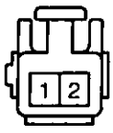

P31
Blue

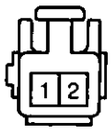

P32

P33

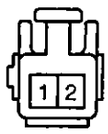

R 5
Black

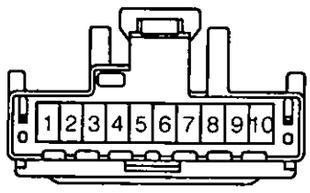

R 6
Black

R 7
Black

R 8

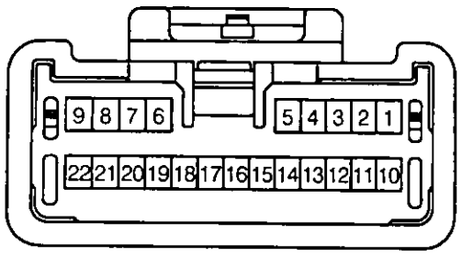

R 9

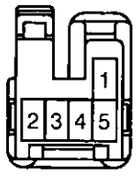

R10

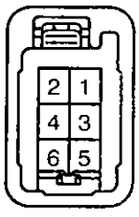

R11

R12

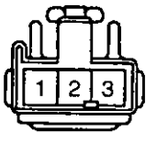

R13

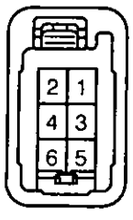

R14
Gray

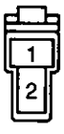

R15
Black

R16

R17

R19

R20

R21

R22

R25
Black

R26
Black

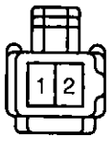

R27

R28

R29

R30

R31

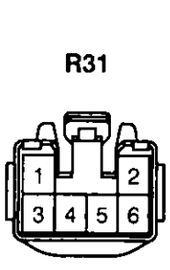

R32

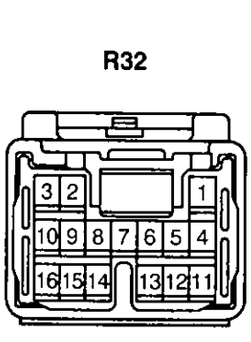

R33

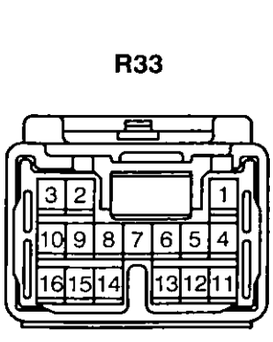

R34
Black

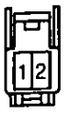

R36

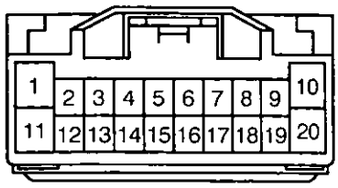

R37

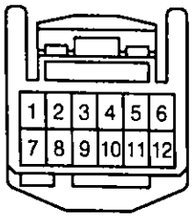

R38

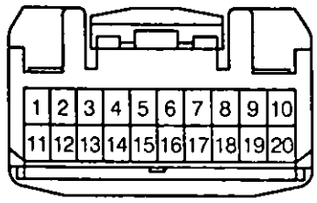

R39

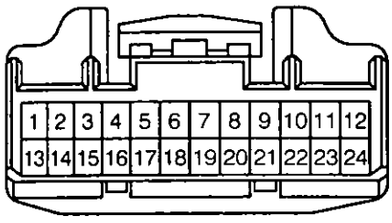

R40
Black

S 1
Black

S 2

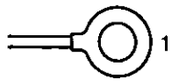

S 3
Black

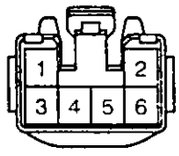

S 4
Brown

S 5
Blue

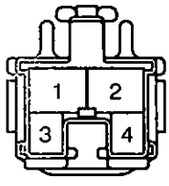

S 6
Gray

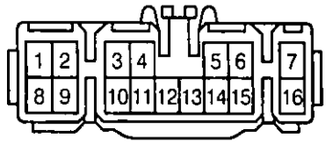

S 7
Gray

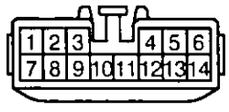

S 8

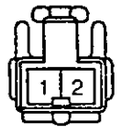

S 9

S10

S11
Yellow

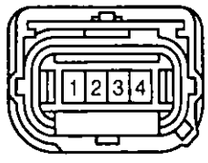

S12
Yellow

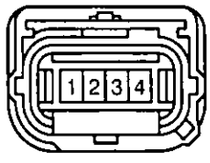

S13
Yellow

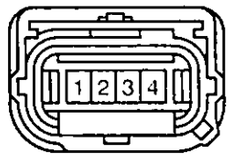

S14
Yellow

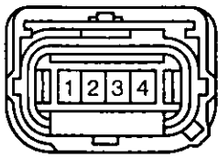

S15

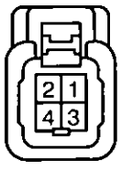

S16

S17
Black

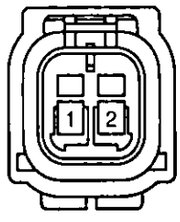

S18
Yellow

S19
Yellow

T 1
Black

T 4

T 5

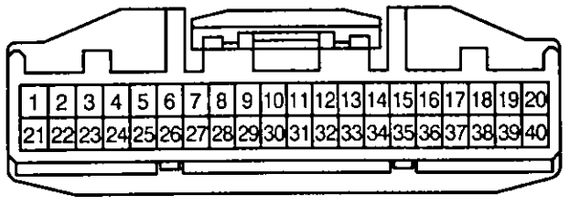

T 7

K CONNECTOR LIST

T 8

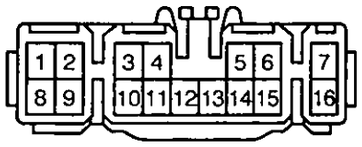

T 9
Black

T10
Black

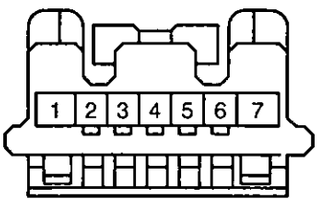

T11
Black

T12
Black

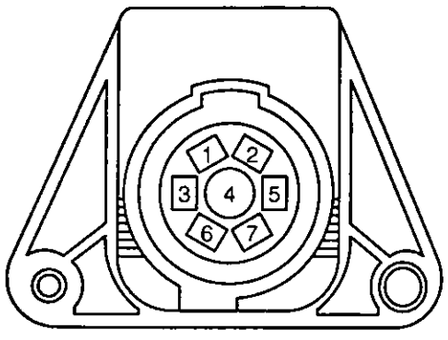

T13

T14

T15
Orange

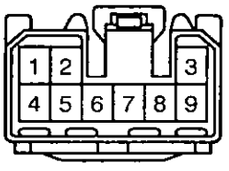

T16
Black

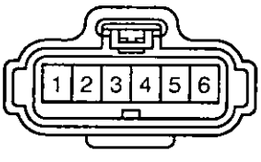

T17
Black

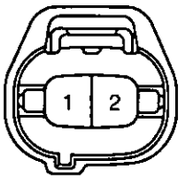

T18

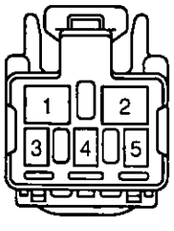

T19

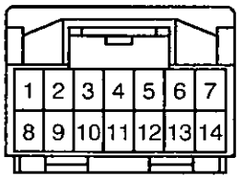

U 1

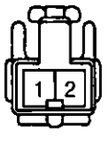

V 1
Black

V 2
Black

V 3
Black

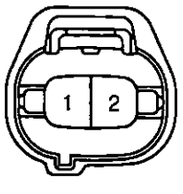

V 4
Black

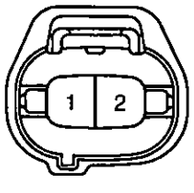

V 6

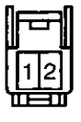

V 7

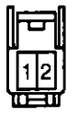

V 8
Black

V 9
Gray

V10
Blue

W 1
Gray

W 4

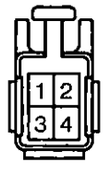

Y 1
Black

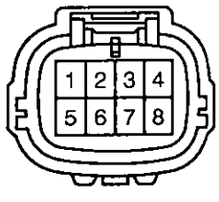

Z 1

L PART NUMBER OF CONNECTORS

Code	Part Name	Part Number
A 1	A/C Ambient Temp. Sensor	90980-11070
A 4	Pressure SW	90980-10943
A 5	A/C Lock Sensor	90980-11016
	A/C Magnetic Clutch	
A12	ABS Speed Sensor Front LH	90980-10941
A13	ABS Speed Sensor Front RH	90980-11002
A14	Accel Position Sensor	90980-11144
A15	Airbag Sensor Front LH	90980-11856
A16	Airbag Sensor Front RH	
A17	Auto Antenna Motor	90980-11194
A18	A/C Solar Sensor	90980-11919
A19	A/C Thermistor	90980-11918
A24	Air Inlet Control Servo Motor	90980-11909
A25	Air Mix Control Servo Motor	90980-10797
A26	Air Vent Mode Control Servo Motor	90980-11165
A27	Airbag Squib (Front Passenger Airbag Assembly)	90980-12160
A28	Airbag Squib (Steering Wheel Pad)	
A29	Ashtray Illumination	90980-10825
A30	Auto Antenna Control Relay	90980-10819
A31	Automatic Light Control Sensor	90980-12056
A32	A/C Amplifier (Rear)	90980-11502
A33	A/C Amplifier (Rear)	90980-11475
A34	A/C Amplifier (Rear)	90980-11497
A35	ABS Speed Sensor Rear LH	90980-11073
A36	ABS Speed Sensor Rear RH	
A37	ABS & BA & TRAC & VSC Actuator	90980-11413
A38	ABS & BA & TRAC & VSC Actuator	90980-10895
A39	ABS & BA & TRAC & VSC Actuator	90980-11151
A40	ABS & BA & TRAC & VSC Actuator	90980-11009
A41	ABS & BA & TRAC & VSC ECU	90980-11935
A42	ABS & BA & TRAC & VSC ECU	90980-11476
A43	ABS & BA & TRAC & VSC ECU	90980-11637
A44	ABS & BA & TRAC & VSC ECU	90980-11638
A45	A/C Control Assembly	90980-12170
A46	A/C Control Assembly	90980-11913
A47	A/C Control Assembly	90980-11927
A48	A/T Shift Lever Illumination	90980-11911
	Shift Lock Control ECU	
B 1	Blower Motor Controller	90980-10910
B 2	Back Door Courtesy SW	90980-10039
B 3	Back Door Key Lock and Unlock SW	90980-11490
B 4	Back Door Lock Motor	90980-11150
	Back Door Unlock Detection SW	
B 5	Buckle SW LH	90980-11169
B 6	Buckle SW RH	

Code	Part Name	Part Number
B 7	Body ECU	90980-12151
B 8	Body ECU	90980-12149
B 9	Body ECU	90980-12150
C 1	Camshaft Position Sensor	90980-10947
C 2	Center Diff Lock Control Motor	90980-11024
C 3	Crankshaft Position Sensor	90980-11162
C 5	Center Diff Lock Control Relay	90980-10801
C10	Cigarette Lighter	90980-10760
C11	Cigarette Lighter Illumination	90980-11148
C12	Combination Meter	82824-60060
C13	Combination Meter	82824-60050
C14	Combination Meter	82824-60060
C15	Combination Meter	82824-60050
C16	Combination SW	90980-11672
C17	Combination SW	90980-12155
C18	Combination SW	90980-12183
C19	Combination SW	90980-11594
C25	Center Airbag Sensor Assembly (w/ Side Airbag)	82824-50160
	Center Airbag Sensor Assembly (w/o Side Airbag)	90980-11873
C26	Center Airbag Sensor Assembly	90980-11872
C27	Center Airbag Sensor Assembly (w/ Side Airbag)	82824-50150
	Center Airbag Sensor Assembly (w/o Side Airbag)	90980-11871
C28	Center Cluster Integration Panel	90980-12200
C29	Curtain Shield Airbag Squib LH	90980-11864
C30	Curtain Shield Airbag Squib RH	
D 1	Data Link Connector 1	90980-11195
D 2	Daytime Running Light Relay No.3	90980-10939
D 3	Daytime Running Light Relay No.3	90980-10940
D 4	Detection SW (Center Diff. Lock)	90980-11250
D 5	Detection SW (Transfer L Position)	
D 6	Detection SW (Transfer Neutral Position)	90980-11025
D 7	Data Link Connector 3	90980-11665
D10	Door Courtesy Light Front LH	90980-11148
D11	Door Courtesy Light Front RH	
D12	Door Courtesy Light Rear LH	
D13	Door Courtesy Light Rear RH	
D14	Door Courtesy SW Front LH	90980-10871
D15	Door Courtesy SW Front RH	
D16	Door Courtesy SW Rear LH	
D17	Door Courtesy SW Rear RH	
D18	Door Key Lock and Unlock SW LH	90980-11170
D19	Door Key Lock and Unlock SW RH	
D20	Door Lock Control SW RH	90980-11950

Note: Not all of the above part numbers of the connector are established for the supply.

Code	Part Name	Part Number
D21	Door Lock Motor Front LH	90980-11150
	Door Unlock Detection SW Front LH	
D22	Door Lock Motor Front RH	
	Door Unlock Detection SW Front RH	
D23	Door Lock Motor Rear LH	
	Door Unlock Detection SW Rear LH	
D24	Door Lock Motor Rear RH	
	Door Unlock Detection SW Rear RH	
D26	DVD Automatic Changer	90980-11971
D27	Door Control Receiver	90980-11909
E 1	Electronically Controlled Transmission Solenoid	90980-12293
E 2	Engine Coolant Temp Sensor	90980-10736
E 3	Engine Hood Courtesy SW	90980-11003
E 4	Electronically Controlled Transmission Pattern Select SW	90980-10933
E 5	Engine Control Module	90980-12144
E 6	Engine Control Module	90980-12145
E 7	Engine Control Module	90980-12143
E 8	Engine Control Module	90980-12146
E 9	Engine Control Module	90980-12142
F 1	Front Fog Light LH	90980-11660
F 2	Front Fog Light RH	
F 3	Front Turn Signal Light LH	90980-11020
	Side Marker Light LH	
F 4	Front Turn Signal Light RH	
	Side Marker Light RH	
F 5	Front Wiper Motor	90980-11599
F 8	Front Door Speaker LH	90980-10935
F 9	Front Door Speaker RH	
F10	Front Interior Light	90980-12211
	Rear Personal Light	
F11	Front Personal Light	90980-10825
F12	Fuel Pump	90980-11077
	Fuel Sender	
F14	Fuel Pump Resistor	90980-11156
F15	Fusible Link Block	90980-11996
F16	Fusible Link Block	90980-11881
F17	Fusible Link Block	90980-11775
F18	Fusible Link Block	90980-10995
F19	Fusible Link Block	82675-60050
G 1	Generator	90980-11964
G 2	Generator	90980-09212
G 3	Glove Box Light	90980-11098
G 4	Gateway ECU	90980-11911

Code	Part Name	Part Number
H 1	Headlight LH (High)	90980-11659
H 2	Headlight LH (Low)	90980-11660
H 3	Headlight RH (High)	90980-11659
H 4	Headlight RH (Low)	90980-11660
H 5	Heated Oxygen Sensor (Bank 1 Sensor 1)	90980-10869
H 6	Heated Oxygen Sensor (Bank 1 Sensor 2)	90980-11028
H 7	Heated Oxygen Sensor (Bank 2 Sensor 1)	90980-10869
H 8	Heated Oxygen Sensor (Bank 2 Sensor 2)	90980-11028
H 9	Horn LH	90980-10619
H10	Horn RH	
H11	High Mounted Stop Light	90980-11211
I 1	Ignition Coil and Igniter No.1	90980-11885
I 2	Ignition Coil and Igniter No.2	
I 3	Ignition Coil and Igniter No.3	
I 4	Ignition Coil and Igniter No 4	
I 5	Ignition Coil and Igniter No 5	
I 6	Ignition Coil and Igniter No 6	
I 7	Ignition Coil and Igniter No 7	
I 8	Ignition Coil and Igniter No 8	
I 9	Injector No.1	90980-11153
I10	Injector No.2	
I11	Injector No.3	
I12	Injector No 4	
I13	Injector No.5	
I14	Injector No.6	
I15	Injector No.7	
I16	Injector No.8	
I18	Ignition SW	90980-11615
I22	Inner Mirror	90980-11186
J 1	Junction Connector	90980-11398
J 2	Junction Connector	90980-11915
J 3	Junction Connector	90980-11398
J 4	Junction Connector	
J 5	Junction Connector	90980-11925
J 6	Junction Connector	90980-11927
J 7	Junction Connector	
J 8	Junction Connector	90980-10803
J 9	Junction Connector	90980-11927
J10	Junction Connector	
J11	Junction Connector	90980-10803
J12	Junction Connector	90980-11927
J13	Junction Connector	90980-11925
J14	Junction Connector	90980-11927
J15	Junction Connector	90980-11925

L PART NUMBER OF CONNECTORS

Code	Part Name	Part Number
J16	Junction Connector	90980-11915
J17	Junction Connector	
J18	Junction Connector	90980-11661
J19	Junction Connector	
J20	Junction Connector	
J21	Junction Connector	
J22	Junction Connector	90980-11915
J23	Junction Connector	
K 1	Knock Sensor 1	90980-11166
K 2	Knock Sensor 2	
K 3	Key Interlock Solenoid	90980-10825
L 1	License Plate Light LH	90980-11148
L 2	License Plate Light RH	
L 3	Lumbar Support Control SW (Driver's Seat)	90980-10601
M 1	Mass Air Flow Meter	90980-11317
M 2	Moon Roof Control ECU	90980-10997
M 3	Moon Roof Control SW	90980-10789
M 4	Master Cylinder Pressure Sensor	90980-11451
M 5	Multi-Display	90980-11911
M 6	Multi-Display	90980-11923
M 7	Multi-Display	90980-12012
M 8	Multi-Display	90980-10799
M 9	Multi-Display	90980-12094
N 1	Noise Filter (Ignition)	90980-10843
N 2	Navigation ECU	90980-11973
N 3	Navigation ECU	90980-11923
N 4	Navigation ECU	90980-12221
O 2	Oil Pressure Sender	90980-11363
O 5	Overhead J/B	90980-12155
P 1	Park/Neutral Position SW	90980-11784
P 2	Parking Light LH	90980-11156
P 3	Parking Light RH	
P 4	Power Outlet (Front)	90980-10760
P 5	Power Outlet (Rear Console Box)	90980-10860
P 6	Power Quarter Window SW LH	90980-10797
P 7	Power Quarter Window SW RH	90980-10996
P 8	Parking Brake SW	90980-10871
P 9	Power Outlet (Luggage Compartment)	90980-10860
P10	Power Vent Window Motor LH	
P11	Power Vent Window Motor RH	
P12	Power Window Master SW	90980-12166
P14	Power Window Motor Front LH	90980-11599
P15	Power Window Motor Front RH	
P16	Power Window Motor Rear LH	
P17	Power Window Motor Rear RH	

Code	Part Name	Part Number
P18	Power Window Control SW Front RH	90980-11947
P19	Power Window Control SW Rear LH	
P20	Power Window Control SW Rear RH	
P21	Pretensioner LH	90980-11862
P22	Pretensioner RH	
P23	Power Seat Control SW (Driver's Seat)	90980-10803
P24	Power Seat Control SW (Front Passenger's Seat)	
P25	Power Seat Motor (Driver's Seat Front Vertical Control)	90980-10825
P26	Power Seat Motor (Driver s Seat Lumbar Support Control)	
P27	Power Seat Motor (Driver's Seat Rear Vertical Control)	
P28	Power Seat Motor (Driver's Seat Reclining Control)	
P29	Power Seat Motor (Driver's Seat Slide Control)	
P30	Power Seat Motor (Front Passenger's Seat Front Vertical Control)	
P31	Power Seat Motor (Front Passenger's Seat Rear Vertical Control)	
P32	Power Seat Motor (Front Passenger's Seat Reclining Control)	
P33	Power Seat Motor (Front Passenger's Seat Slide Control)	
R 5	Remote Control Mirror SW	90980-11657
R 6	Rheostat	90980-10799
R 7	Room Temp Sensor (Front)	90980-11918
R 8	Rear A/C Control SW	90980-11503
R 9	Rear Air Mix Control Servo Motor	90980-11319
R10	Rear Combination Light LH	90980-11587
R11	Rear Combination Light LH	90980-10908
R12	Rear Combination Light RH	
R13	Rear Combination Light RH	90980-11587
R14	Rear Cooler Blower Motor	90980-10214
R15	Rear Cooler Magnetic Valve	90980-10860
R16	Rear Cooler Power Transistor	90980-10171
R17	Rear Cooler Relay	
R19	Rear Door Speaker LH	90980-10935
R20	Rear Door Speaker RH	
R21	Rear Evaporator Temp. Sensor	90980-11918
R22	Rear Heater Blower Motor	90980-10860
R25	Rear Heater Power Transistor	90980-10171
R26	Rear Inlet Air Temp. Sensor	90980-11369
R27	Rear Interior Light	90980-10935
R28	Rear Window Defogger	90980-11097
R29	Rear Window Defogger	

Note: Not all of the above part numbers of the connector are established for the supply.

Code	Part Name	Part Number
R30	Rear Wiper Motor	90980-10795
R31	Rear Wiper Relay	90980-10797
R32	Remote Control Mirror LH	90980-11573
R33	Remote Control Mirror RH	
R34	Room Temp Sensor (Rear)	90980-11918
R36	Radio and Player	90980-12038
R37	Radio and Player	90980-12183
R38	Radio and Player	90980-12259
R39	Rear Seat Audio Controller	90980-12200
R40	Roll Sensing of Curtain Shield Airbags Cutoff SW	90980-10957
S 1	Starter	90980-11400
S 2	Starter	90980-09585
S 3	Seat Heater SW (Driver's Seat)	90980-10797
S 4	Seat Heater SW (Front Passenger's Seat)	90980-10996
S 5	Stop Light SW	90980-11118
S 6	Stereo Component Amplifier	90980-10848
S 7	Stereo Component Amplifier	90980-10807
S 8	Seat Belt Warning Occupant Detection Sensor	90980-10860
S 9	Seat Heater (Driver's Seat)	90980-10907
S10	Seat Heater (Front Passenger's Seat)	
S11	Side Airbag Sensor Front LH	90980-12225
S12	Side Airbag Sensor Front RH	
S13	Side Airbag Sensor Rear LH	
S14	Side Airbag Sensor Rear RH	
S15	Seat Heater (Driver's Seat Cushion)	90980-10794
S16	Seat Heater (Front Passenger's Seat Cushion)	
S17	Seat Position Sensor	90980-12195
S18	Side Airbag Squib LH	90980-11864
S19	Side Airbag Squib RH	
T 1	Theft Deterrent Horn	90980-10619

Code	Part Name	Part Number
T 4	Telescopic Motor	90980-10799
T 5	Theft Deterrent ECU	90980-12169
T 7	Tilt and Telescopic ECU	90980-10799
T 8	Tilt and Telescopic ECU	90980-10848
T 9	Tilt Motor	90980-10799
T10	Ignition Key Cylinder Light	90980-12092
	Transponder Key Amplifier	
T11	Turn Signal Flasher	90980-10799
T12	Trailer Socket	82824-34030
T13	Tweeter LH	90980-11300
T14	Tweeter RH	
T15	Towing Converter Relay	90980-11535
T16	Throttle Control Motor and Sensor	90980-11858
T17	Turbine Speed Sensor	90980-11156
T18	Towing Brake Controller	90980-11603
T19	Transponder Key Computer	90980-11911
U 1	Unlock Warning SW	90980-10860
V 1	Vapor Pressure Sensor	90980-11143
V 2	Vehicle Speed Sensor (Combination Meter)	
V 3	Vehicle Speed Sensor (Electronically Controlled Transmission)	90980-11156
V 4	VSV (EVAP)	
V 6	Vanity Light LH	90980-11918
V 7	Vanity Light RH	
V 8	VSC Warning Buzzer	90980-10906
V 9	VSV (Canister Closed Valve)	90980-11162
V10	VSV (Pressure Switching Valve)	90980-11859
W 1	Washer Motor	90980-11294
W 4	Woofer (Speaker)	90980-10795
Y 1	Yaw Rate Sensor	90980-12080
Z 1	Option Connector (Glass Breakage Sensor)	90980-10825

* The system shown here is an EXAMPLE ONLY. It is different to the actual circuit shown in the wiring diagram section

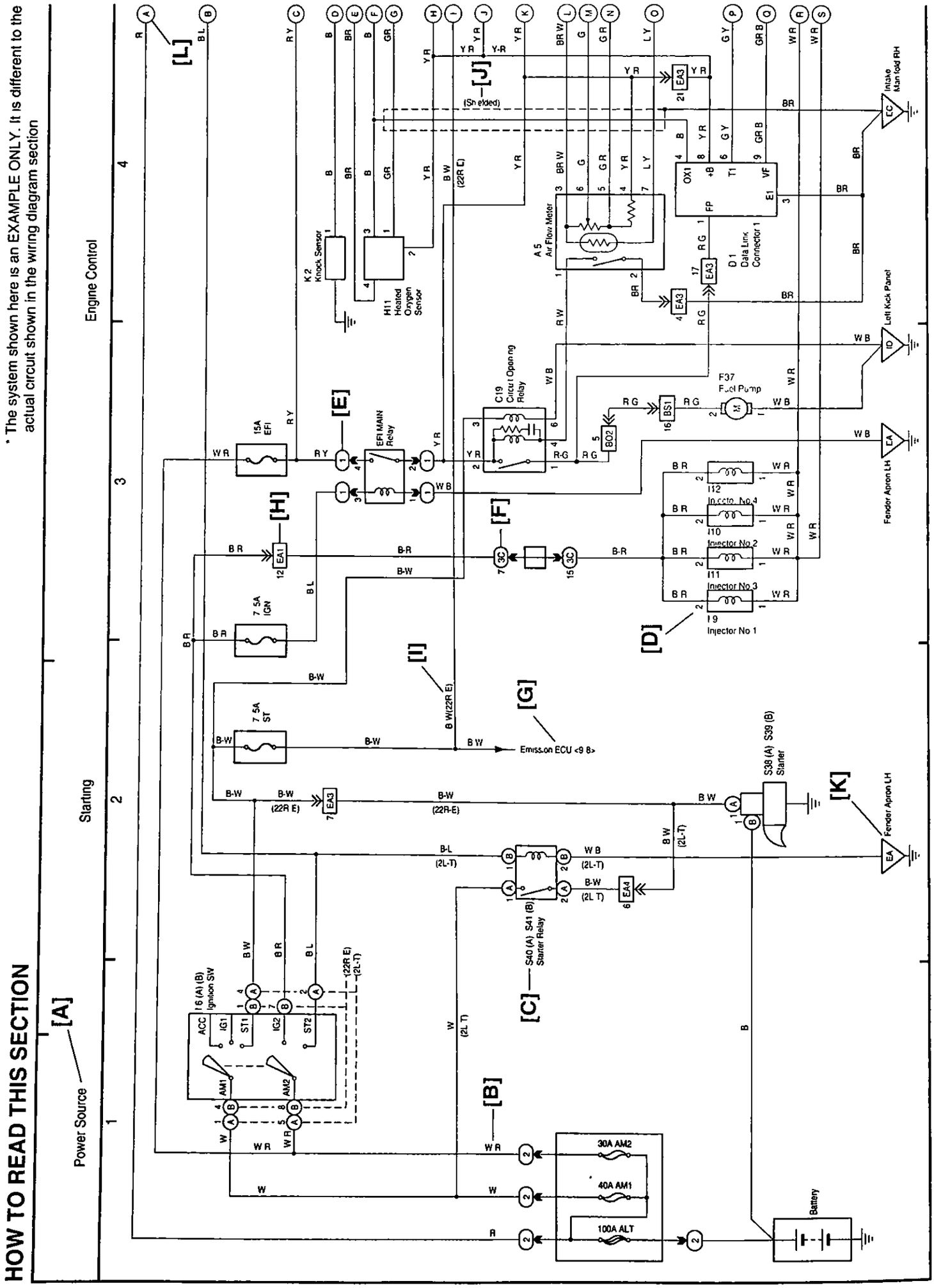

[A] : System Title

[B] : Indicates the wiring color.

Wire colors are indicated by an alphabetical code.

B	= Black	W	= White	BR	= Brown
L	= Blue	V	= Violet	SB	= Sky Blue
R	= Red	G	= Green	LG	= Light Green
P	= Pink	Y	= Yellow	GR	= Gray
O	= Orange				

The first letter indicates the basic wire color and the second letter indicates the color of the stripe.

Example: L – Y

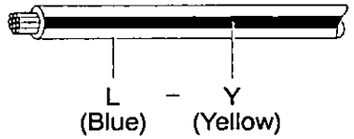

[C] : The position of the parts is the same as shown in the wiring diagram and wire routing.

[D] : Indicates the pin number of the connector. The numbering system is different for female and male connectors.

Example : Numbered in order from upper left to lower right

Numbered in order from upper right to lower left

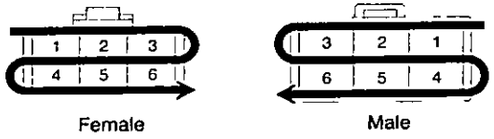

The numbering system for the overall wiring diagram is the same as above

[E] : Indicates a Relay Block. No shading is used and only the Relay Block No. is shown to distinguish it from the J/B.

Example : ① Indicates Relay Block No.1

[F] : Junction Block (The number in the circle is the J/B No. and the connector code is shown beside it). Junction Blocks are shaded to clearly separate them from other parts.

Example:

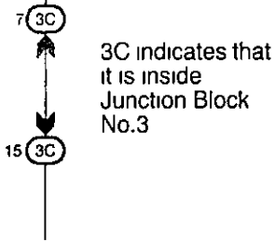

[G] : Indicates related system.

[H] : Indicates the wiring harness and wiring harness connector. The wiring harness with male terminal is shown with arrows (≫). Outside numerals are pin numbers.

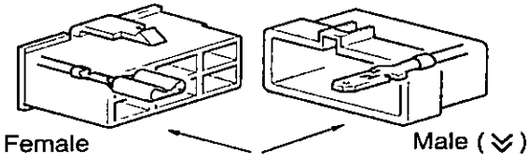

[I] : ( ) is used to indicate different wiring and connector, etc. when the vehicle model, engine type, or specification is different.

[J] : Indicates a shielded cable.

[K] : Indicates and located on ground point.

[L] : The same code occuring on the next page indicates that the wire harness is continuous.

SYSTEM INDEX

SYSTEMS	LOCATION
Air Conditioning (Front)	31-5
Air Conditioning (Rear)	31-15
Auto Antenna	28-3
Automatic Glare-Resistant EC Mirror with Compass	15-3
Back-Up Light	10-2
Center Differential Lock	14-3
Charging	2-4
Cigarette Lighter	21-2
Combination Meter	30-5
Cruise Control	5-5
Electronically Controlled Transmission and A/T Indicator	5-6
Engine Control	4-4
Engine Immobiliser System	4-19
Front Wiper and Washer	18-2
Garage Door Opener	15-4
Horn	18-4
Ignition	3-2
Illumination	9-3
Mirror Heater	11-3
Moon Roof	17-2
Multi-Display (w/o Navigation System)	29-3
Multiplex Communication System	1-5
* Automatic Light Control	
* Door Lock Control	
* Front Fog Light	
* Headlight	
* Interior Light	
* Key Reminder	
* Light Auto Turn Off	
* Power Window	
* Theft Deterrent	
* Wireless Door Lock Control	
Navigation System	26-12
Power Outlet	20-2
Power Rear Quarter Window	11-4
Power Seat	22-2
Power Source	1-31-1
Power Tilt and Power Telescopic	23-2
Radio and Player (w/ Navigation System)	26-3
Radio and Player (w/o Navigation System)	27-3
Rear Window Defogger	11-2
Rear Wiper and Washer	19-2
Remote Control Mirror	16-2
Seat Belt Warning	25-2
Seat Heater	21-3
Shift Lock	24-3
SRS	13-2
Starting	2-2
Stop Light	10-3
Taillight	8-2
Trailer Towing	7-2
Turn Signal and Hazard Warning Light	6-2
VSC	12-4

M OVERALL ELECTRICAL WIRING DIAGRAM

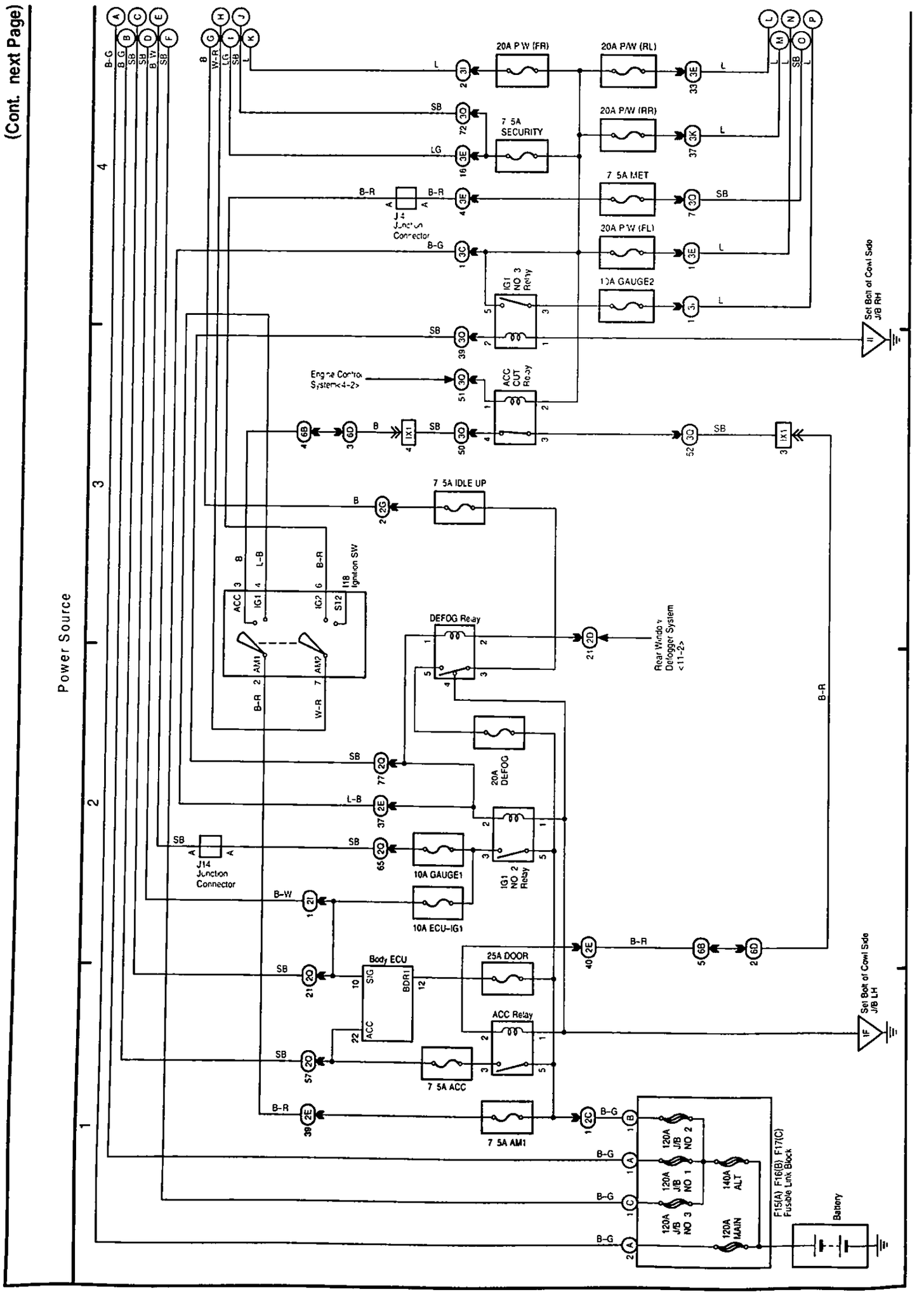

(Cont. next page)

Multiplex Communication System

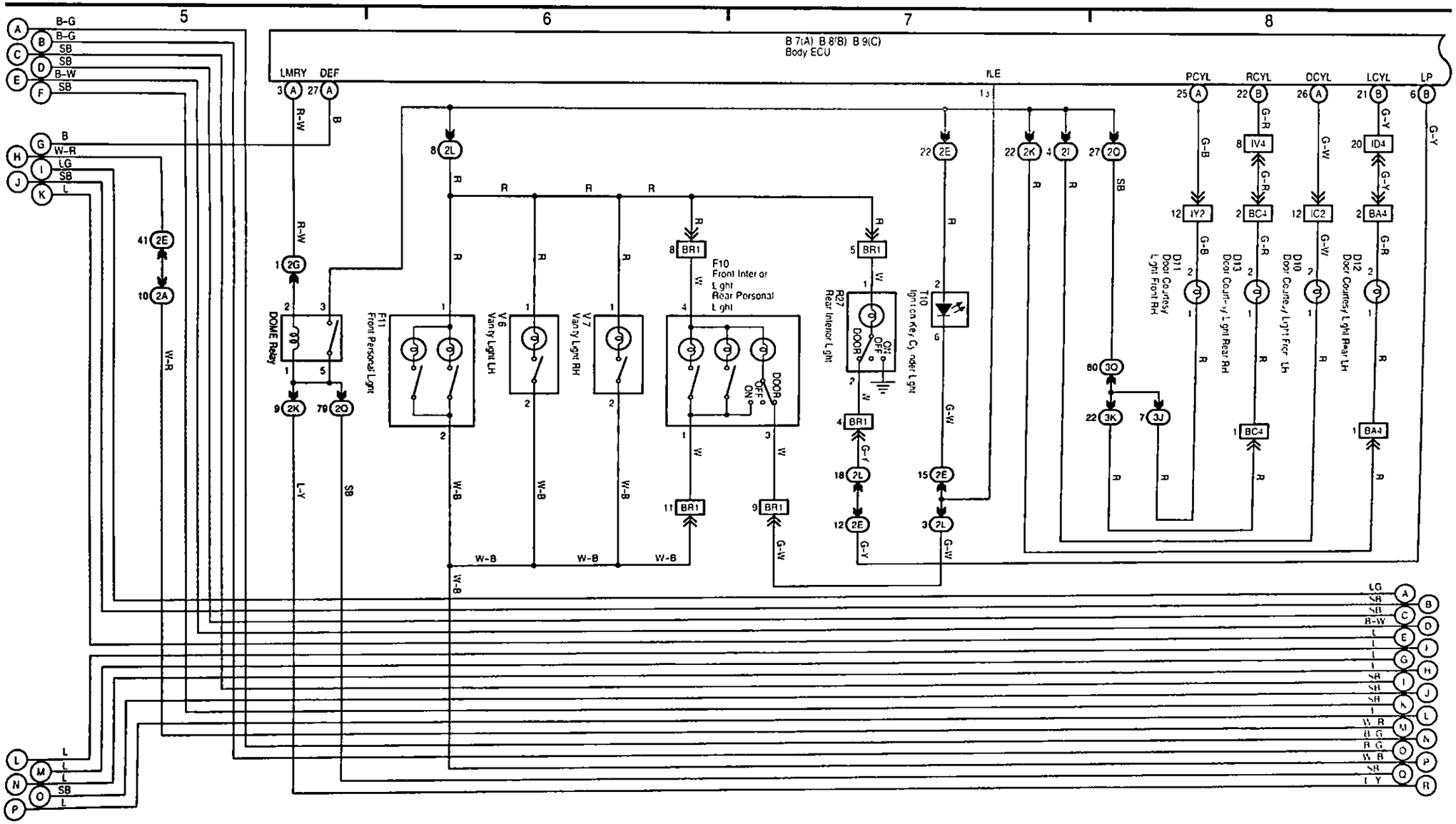

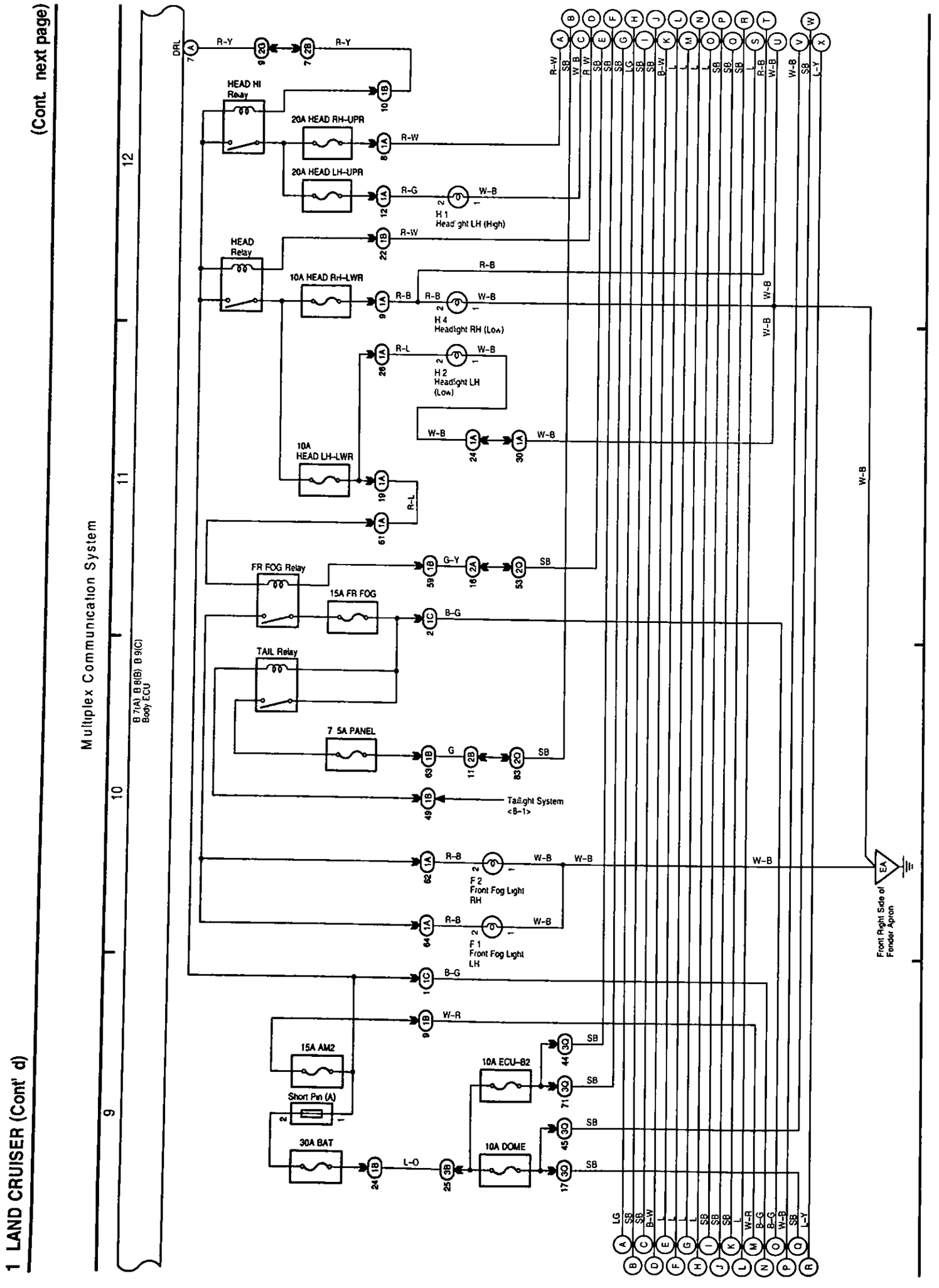
1 LAND CRUISER (Cont' d)
(Cont. next page)
Multiplex Communication System
B 7(A) B 8(B) B 9(C)
Body ECU
DRL
HEAD HI Relay
20A HEAD RH-UPR
20A HEAD LH-UPR
H 1
Headlight LH (High)
HEAD Relay
10A HEAD RH-LWR
H 4
Headlight RH (Low)
H 2
Headlight LH (Low)
10A HEAD LH-LWR
FR FOG Relay
15A FR FOG
TAIL Relay
7 5A PANEL
Taillight System <B-1>
F 2
Front Fog Light RH
F 1
Front Fog Light LH
15A AM2
Short Pin (A)
30A BAT
10A ECU-B2
10A DOME
Front Right Side of Fender Apron
R-Y
R-W
R-G
W-B
R-B
R-L
G-Y
SB
B-G
G
W-R
L-O
LG
B-W
L
W-B
L-Y

(Cont. next page)

Multiplex Communication System

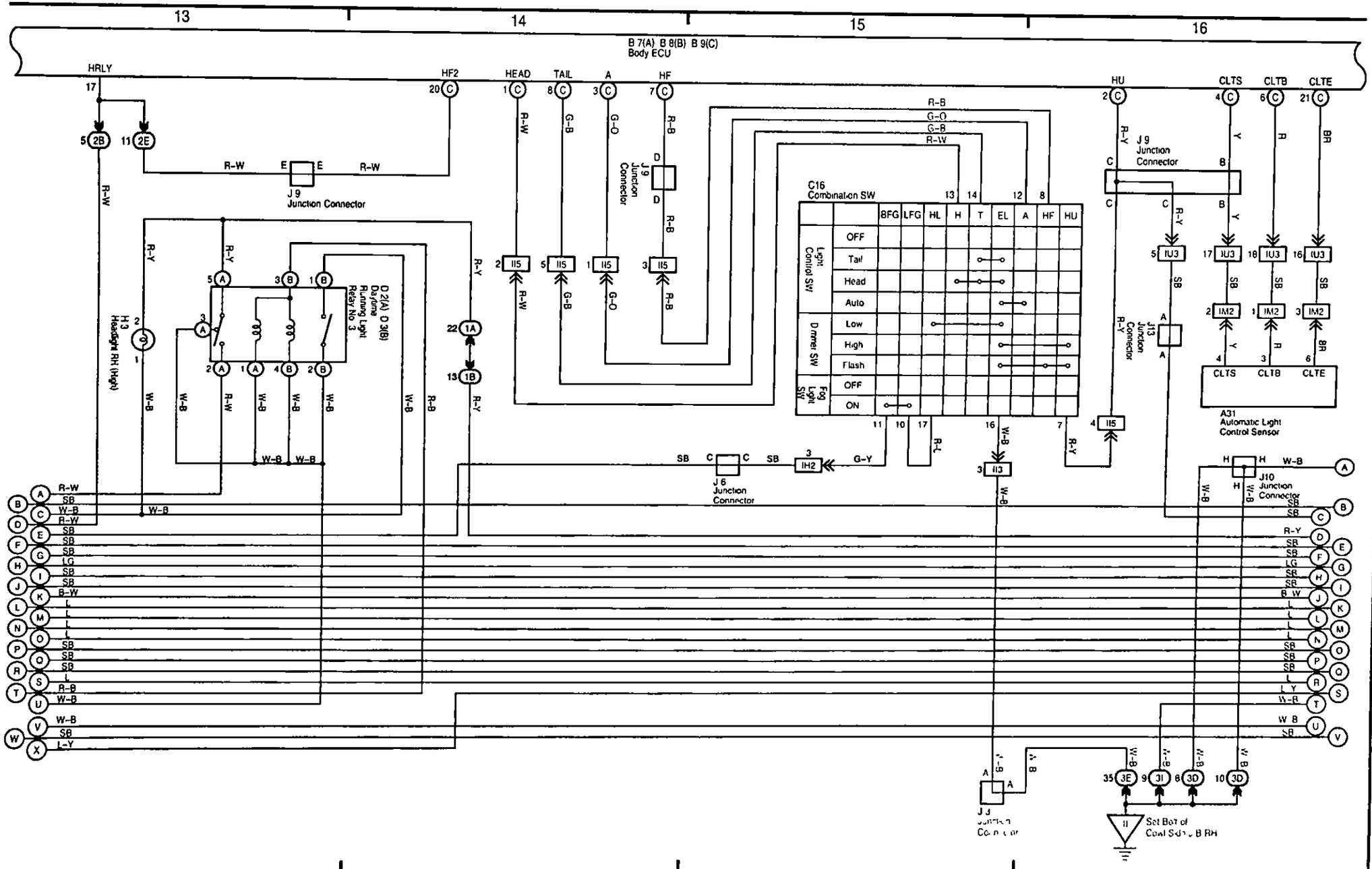

M

1 LAND CRUISER (Cont' d)

(Cont. next page)

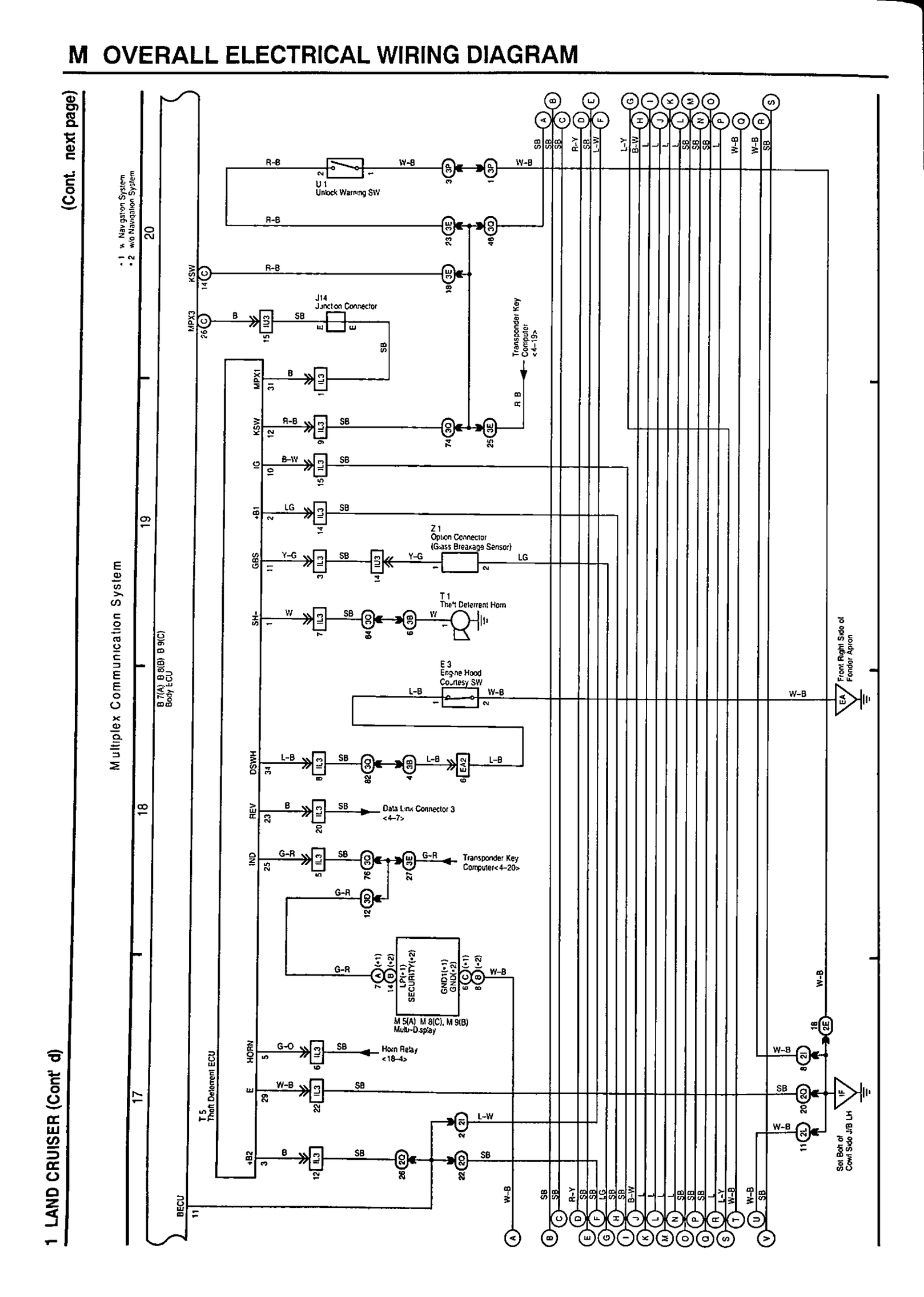

(Cont. next page)

Multiplex Communication System

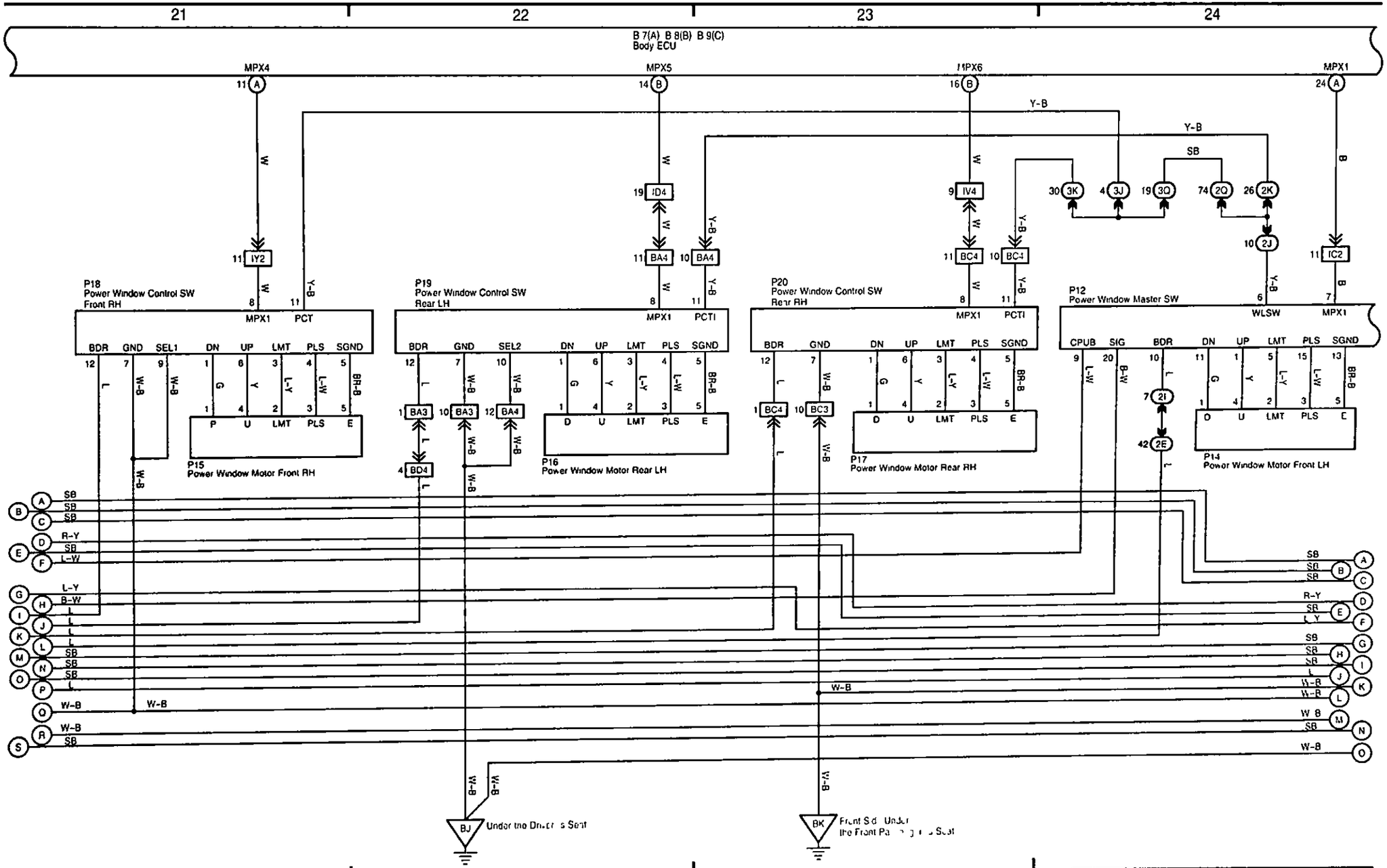

(Cont. next page)

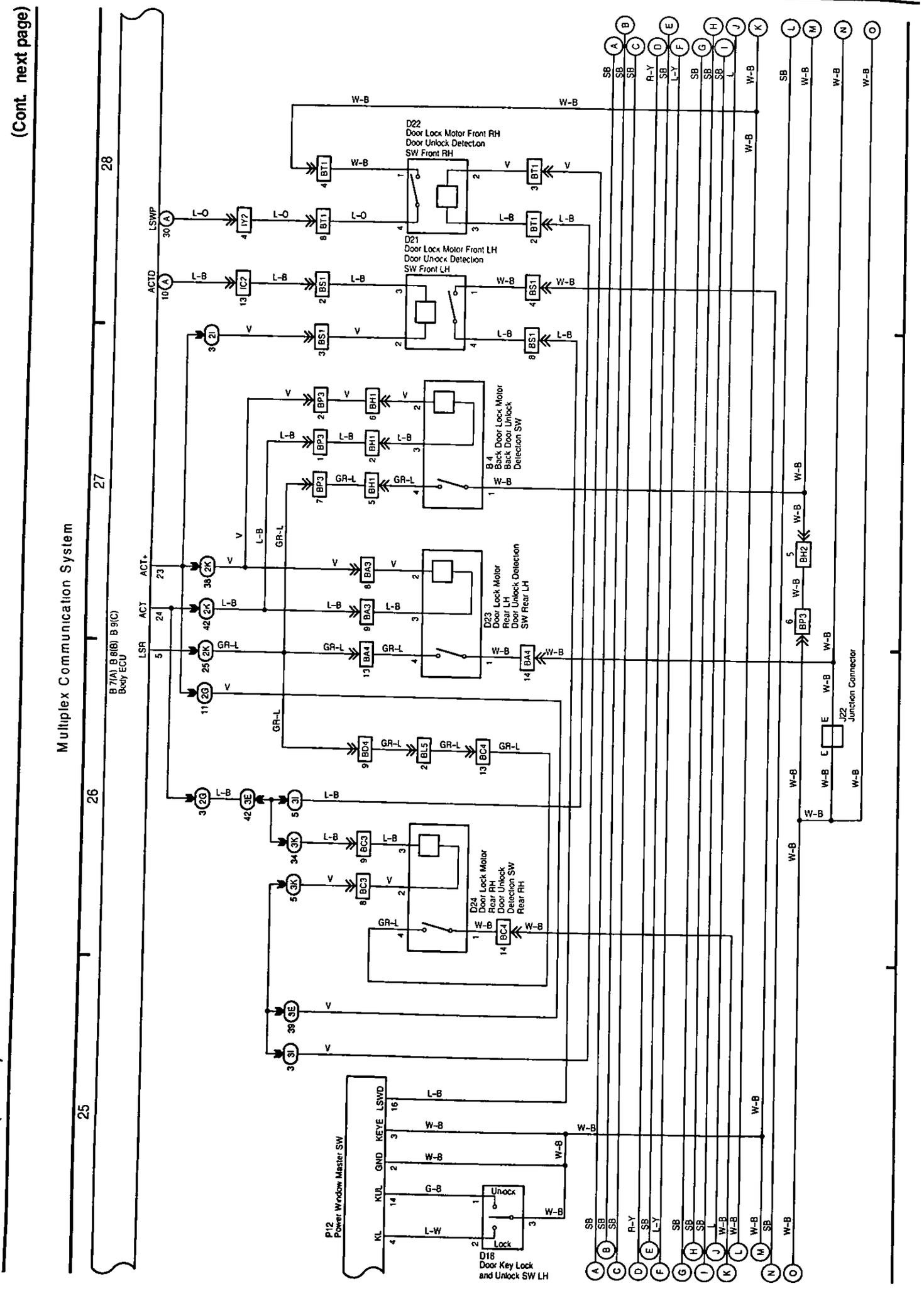

(Cont. next page)

Multiplex Communication System

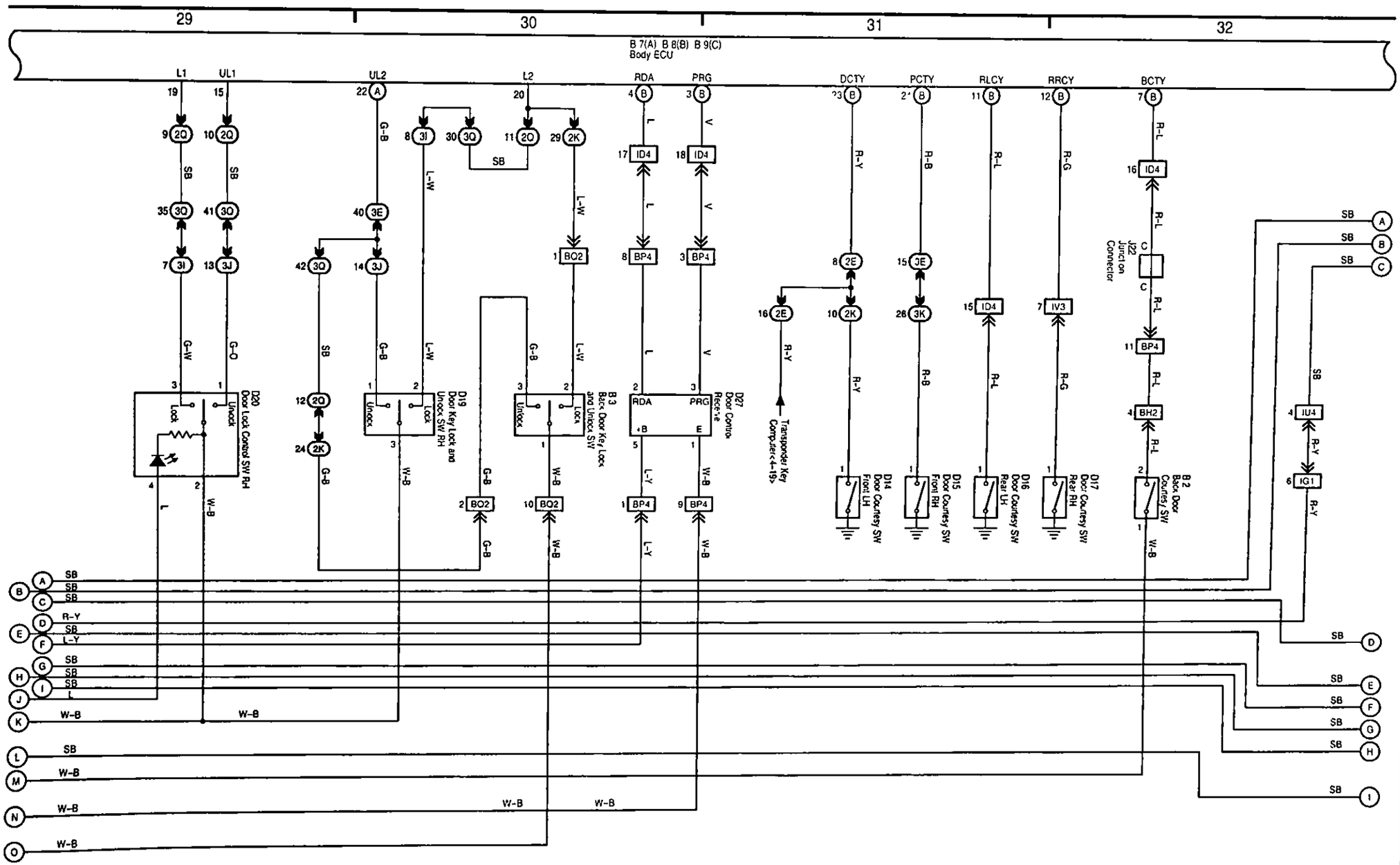

M

M OVERALL ELECTRICAL WIRING DIAGRAM

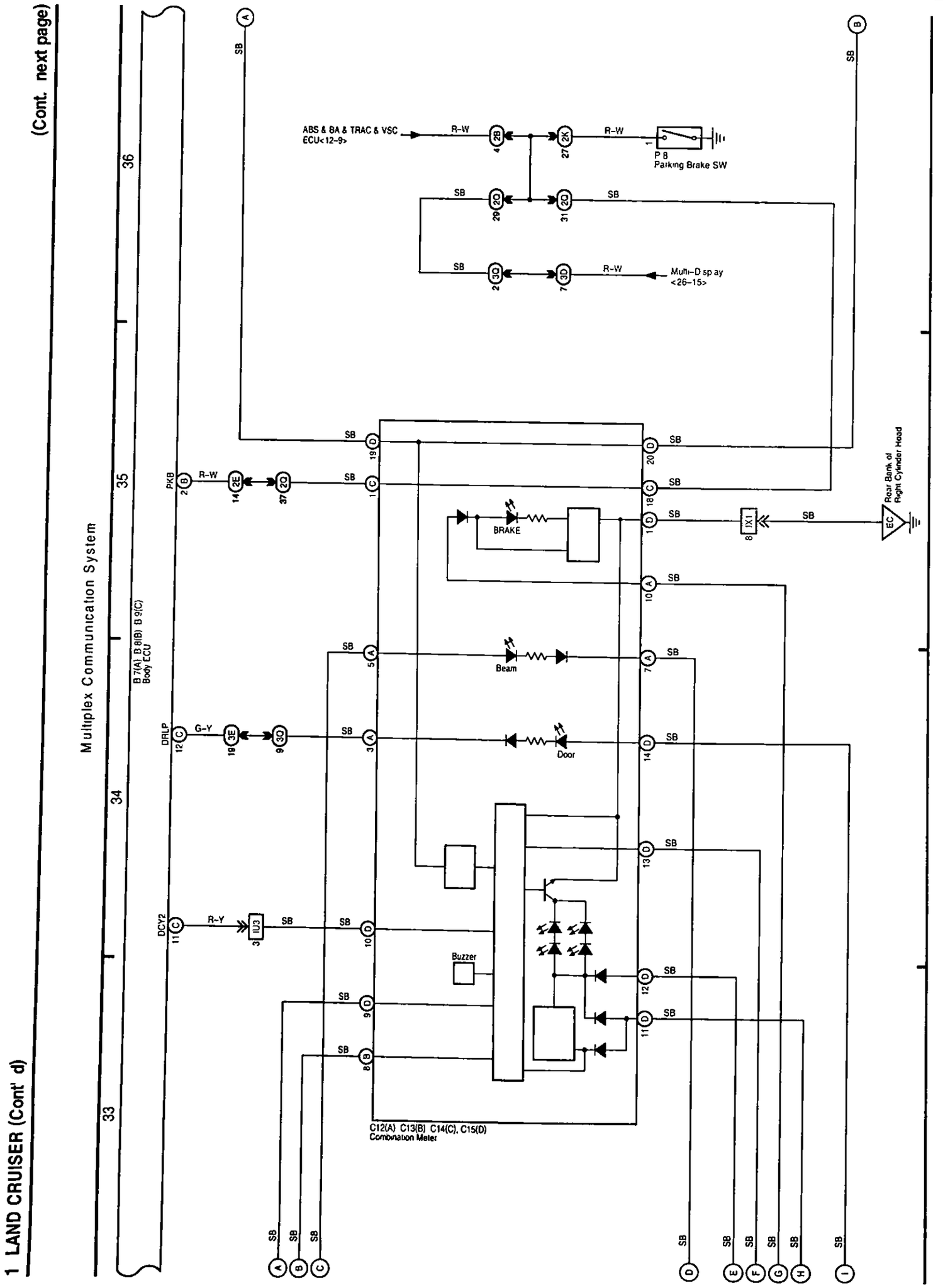

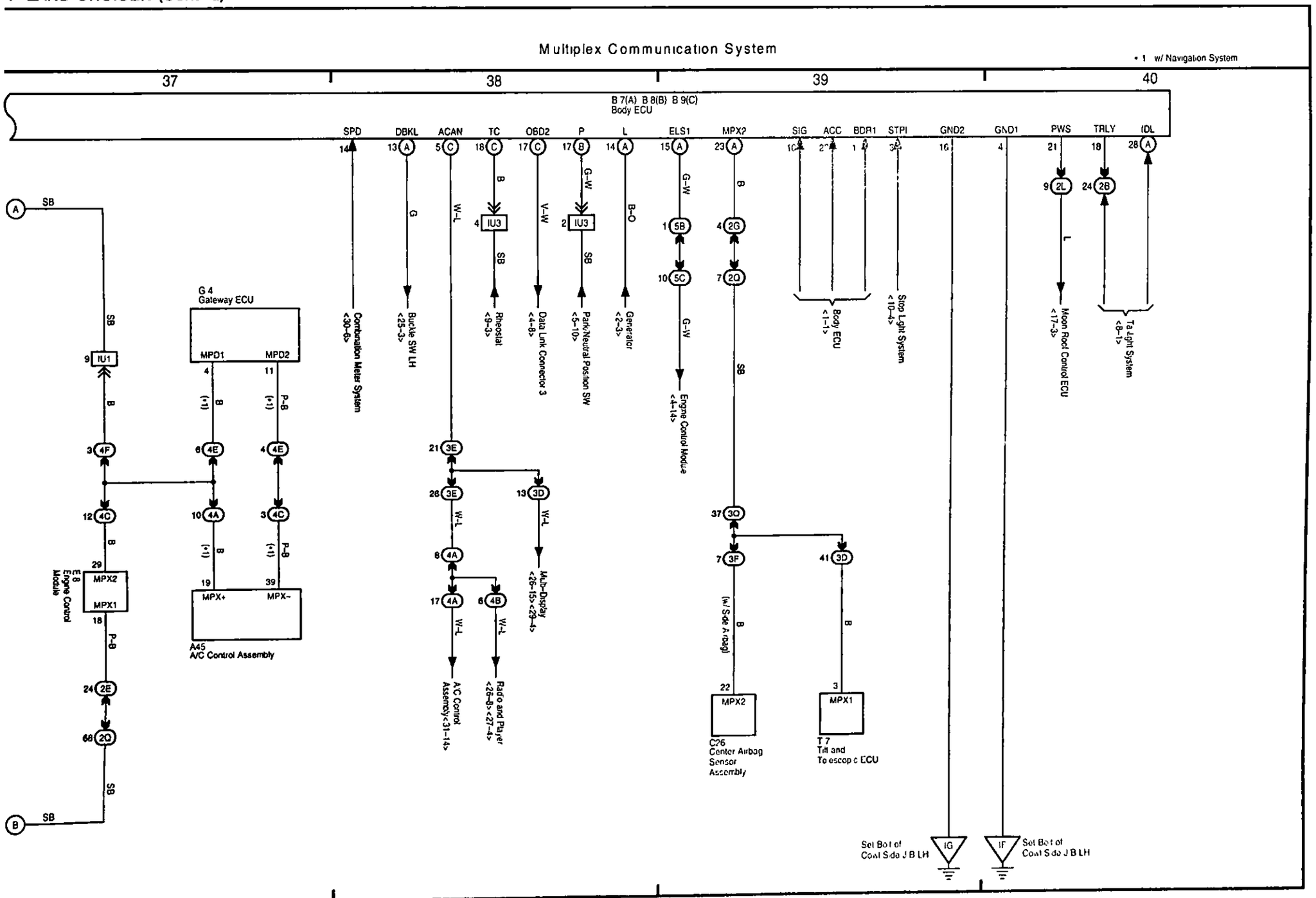
Multiplex Communication System
• 1 w/ Navigation System
37
38
39
40
B 7(A) B 8(B) B 9(C)
Body ECU
SPD
DBKL
ACAN
TC
OBD2
P
L
ELS1
MPX2
SIG
ACC
BDR1
STPI
GND2
GND1
PWS
TRLY
IDL
Combination Meter System <30-6>
Buckle SW LH <25-3>
Rheostat <9-3>
Data Link Connector 3 <4-8>
Park/Neutral Position SW <5-10>
Generator <2-3>
Engine Control Module <4-14>
Body ECU <1-1>
Stop Light System <10-4>
Moon Roof Control ECU <17-3>
Ta Light System <8-1>
G 4
Gateway ECU
MPD1
MPD2
A45
A/C Control Assembly
E 8
Engine Control Module
MPX1
MPX2
MPX+
MPX-
A/C Control Assembly <31-14>
Radio and Player <26-8> <27-4>
Multi-Display <26-15> <29-4>
C26
Center Airbag Sensor Assembly
T 7
Tilt and Telescopic ECU
(w/ Side Airbag)
Set Bolt of Cowl Side J B LH
IG
IF
Set Bolt of Cowl Side J B LH

M

M OVERALL ELECTRICAL WIRING DIAGRAM

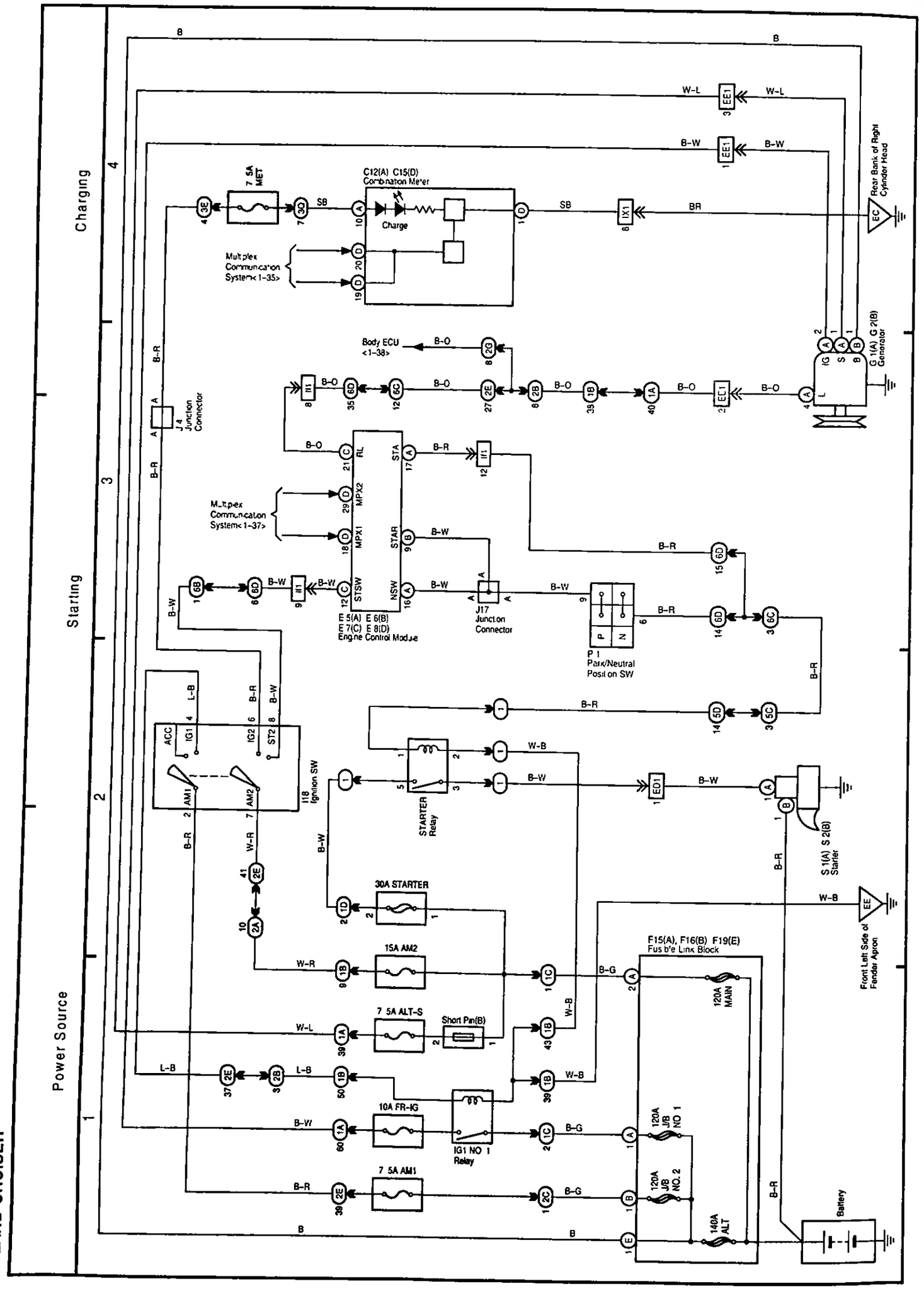

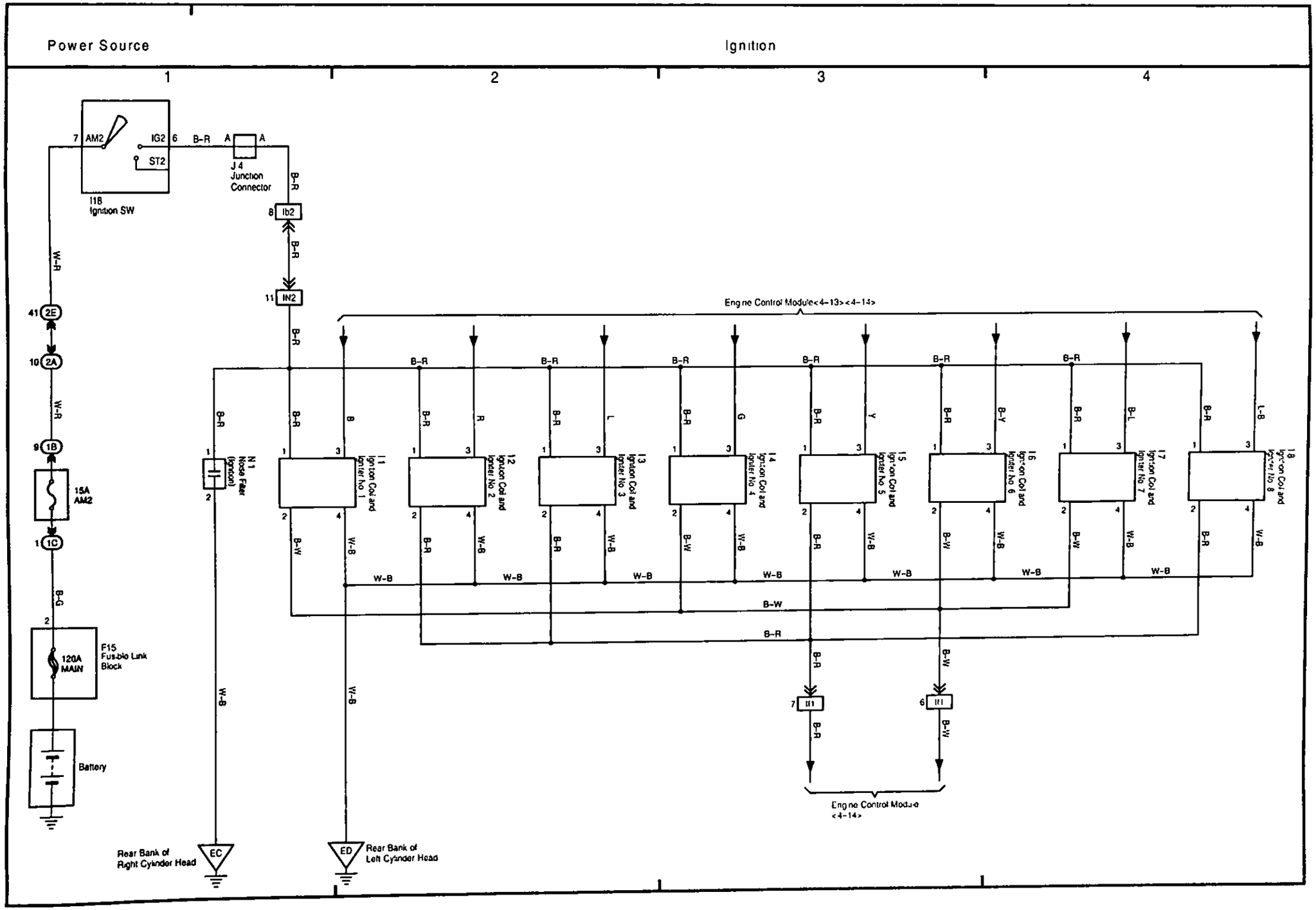
Power Source
Ignition
1
2
3
4
AM2
IG2
ST2
I18
Ignition SW
J 4
Junction
Connector
Ib2
IN2
Engine Control Module<4-13><4-14>
N 1
Noise Filter
(Ignition)
I1
Ignition Coil and
Igniter No 1
I2
Ignition Coil and
Igniter No 2
I3
Ignition Coil and
Igniter No 3
I4
Ignition Coil and
Igniter No 4
I5
Ignition Coil and
Igniter No 5
I6
Ignition Coil and
Igniter No 6
I7
Ignition Coil and
Igniter No 7
I8
Ignition Coil and
Igniter No 8
15A
AM2
120A
MAIN
F15
Fusible Link
Block
Battery
Rear Bank of
Right Cylinder Head
EC
ED
Rear Bank of
Left Cylinder Head
Engine Control Module
<4-14>

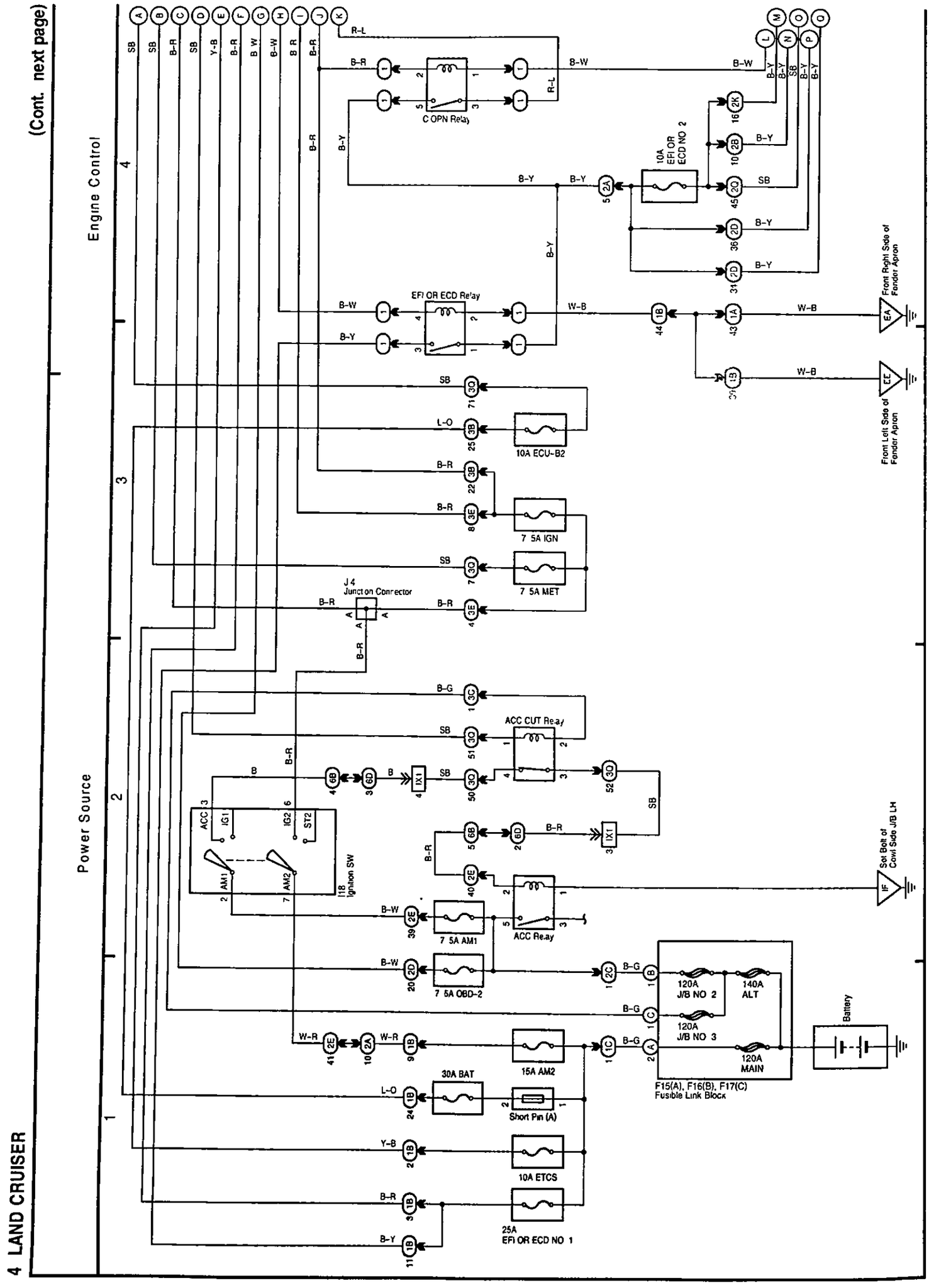
(Cont. next page)
Engine Control
Power Source
C OPN Relay
EFI OR ECD Relay
10A EFI OR ECD NO 2
10A ECU-B2
7.5A IGN
7.5A MET
J4 Junction Connector
ACC CUT Relay
ACC Relay
7.5A AM1
7.5A OBD-2
15A AM2
30A BAT
Short Pin (A)
10A ETCS
25A EFI OR ECD NO 1
I18 Ignition SW
120A J/B NO. 2
140A ALT
120A J/B NO. 3
120A MAIN
F15(A), F16(B), F17(C) Fusible Link Block
Battery
Front Right Side of Fender Apron
Front Left Side of Fender Apron
Set Bolt of Cowl Side J/B LH

(Cont. next page)

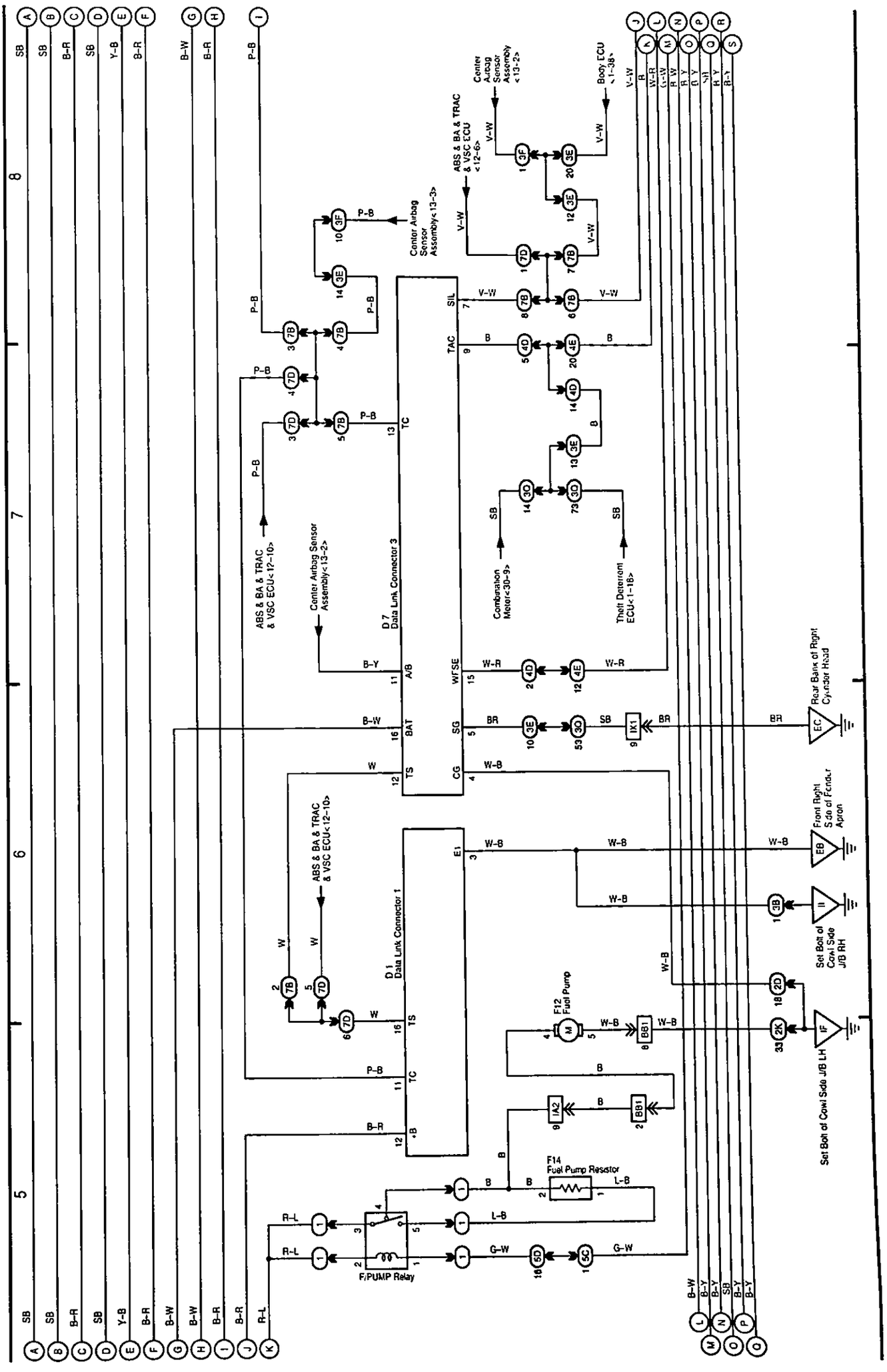

(Cont. next page)

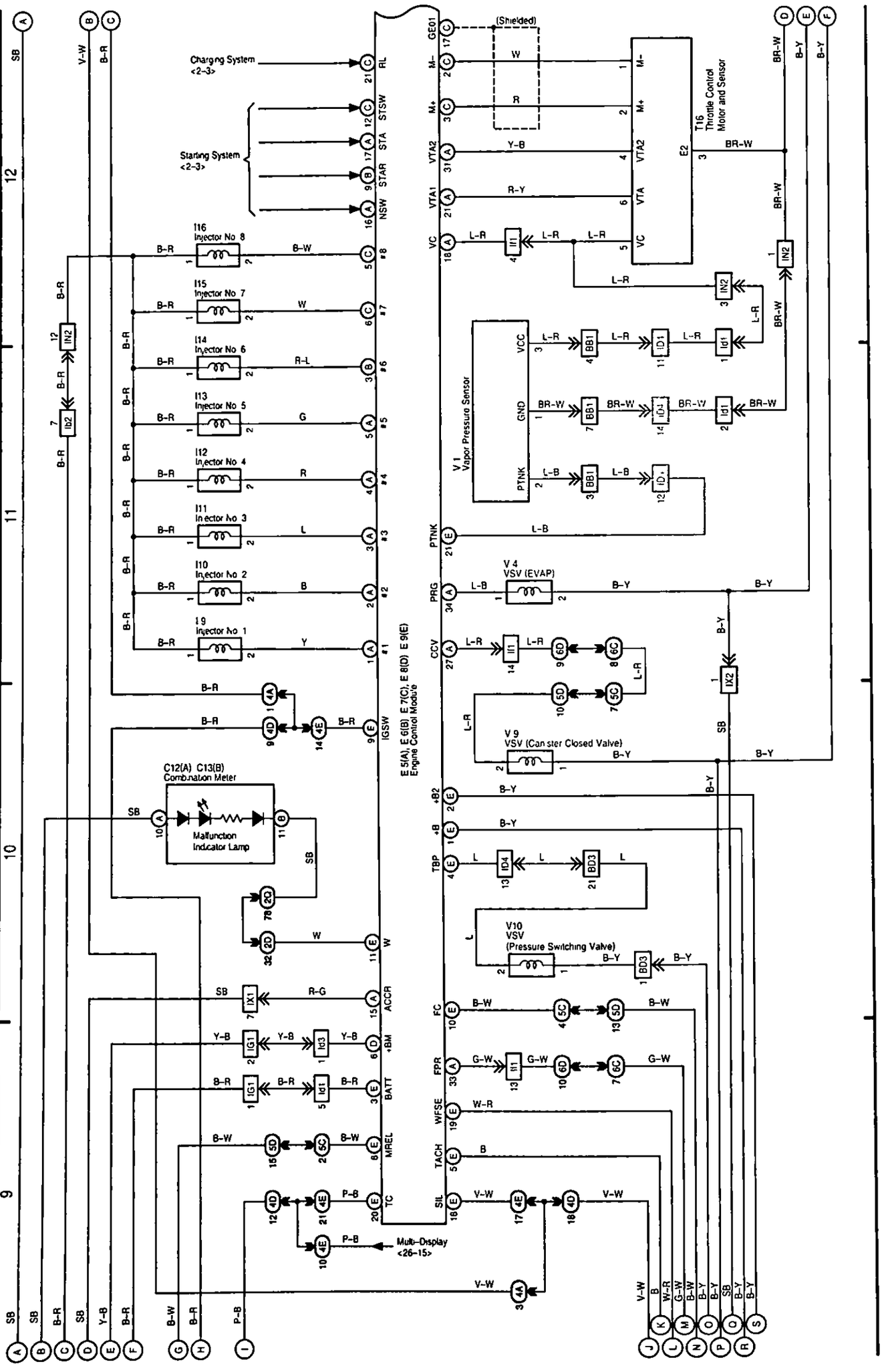

(Cont. next page)

Engine Control

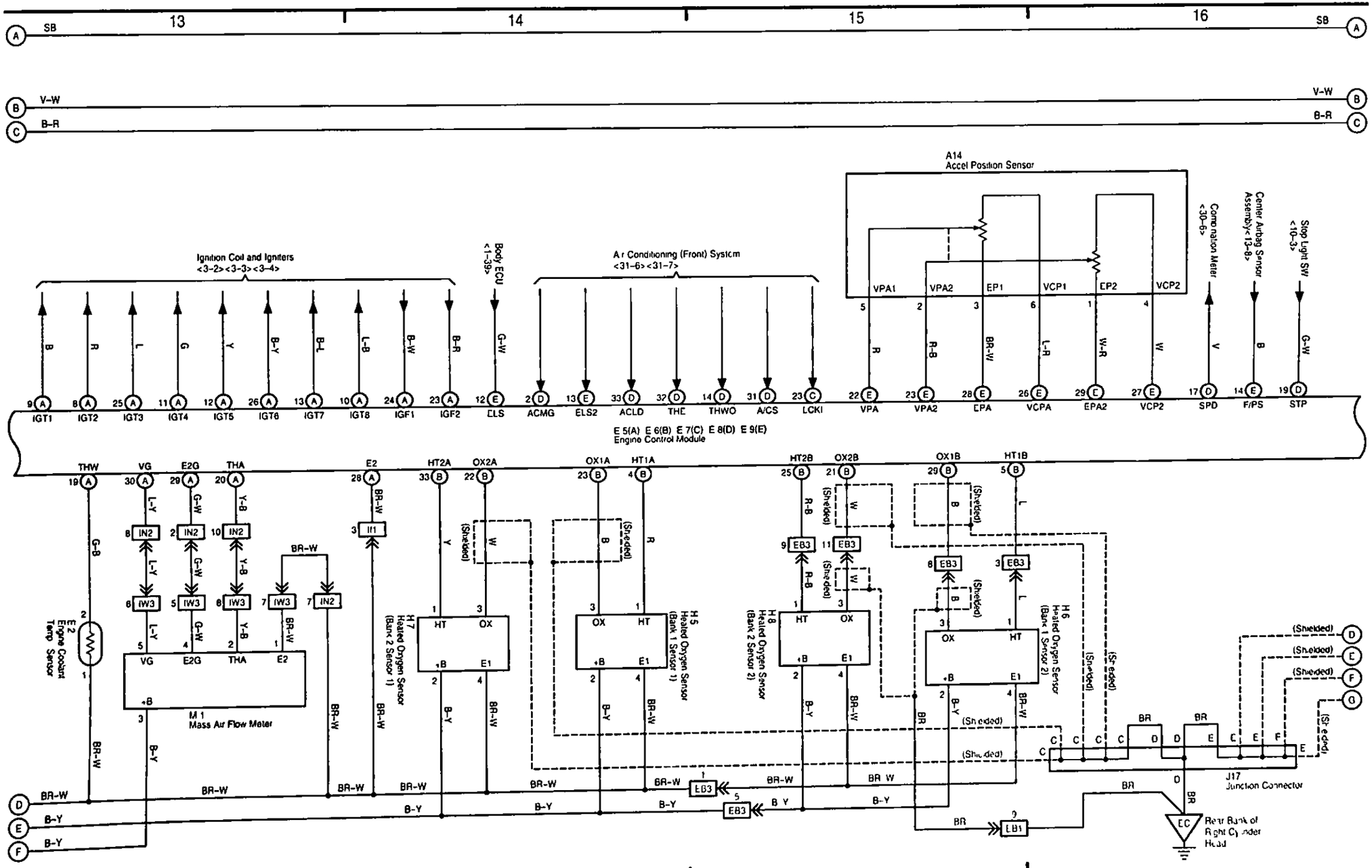

M

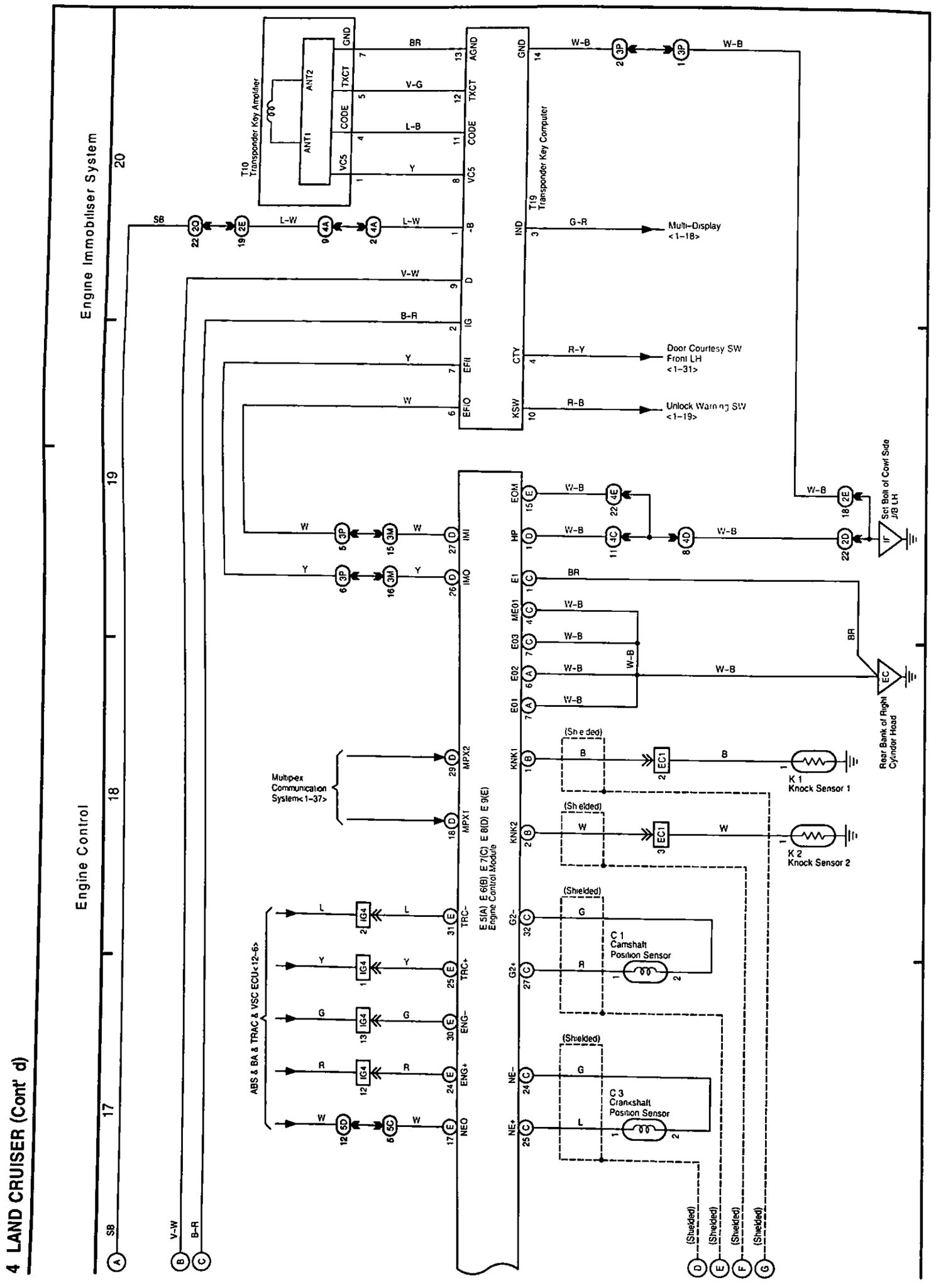
Engine Immobiliser System
Engine Control
20
19
18
17
T10
Transponder Key Amplifier
ANT1
ANT2
GND
TXCT
CODE
VC5
BR
V-G
L-B
Y
AGND
TXCT
CODE
VC5
T19
Transponder Key Computer
GND
IND
W-B
G-R
Multi-Display
<1-18>
SB
L-W
-B
V-W
D
B-R
IG
Y
EFI
W
EFI0
CTY
R-Y
Door Courtesy SW
Front LH
<1-31>
KSW
R-B
Unlock Warning SW
<1-19>
IMI
IMO
MPX2
MPX1
Multiplex
Communication
System<1-37>
EOM
HP
E1
ME01
E03
E02
E01
Set Bolt of Cowl Side
J/B LH
Rear Bank of Right
Cylinder Head
EC
KNK1
KNK2
K 1
Knock Sensor 1
K 2
Knock Sensor 2
(Shielded)
E 5(A) E 6(B) E 7(C) E 8(D) E 9(E)
Engine Control Module
ABS & BA & TRAC & VSC ECU<12-6>
TRC-
TRC+
ENG-
ENG+
NEO
G2-
G2+
NE-
NE+
C 1
Camshaft
Position Sensor
C 3
Crankshaft
Position Sensor

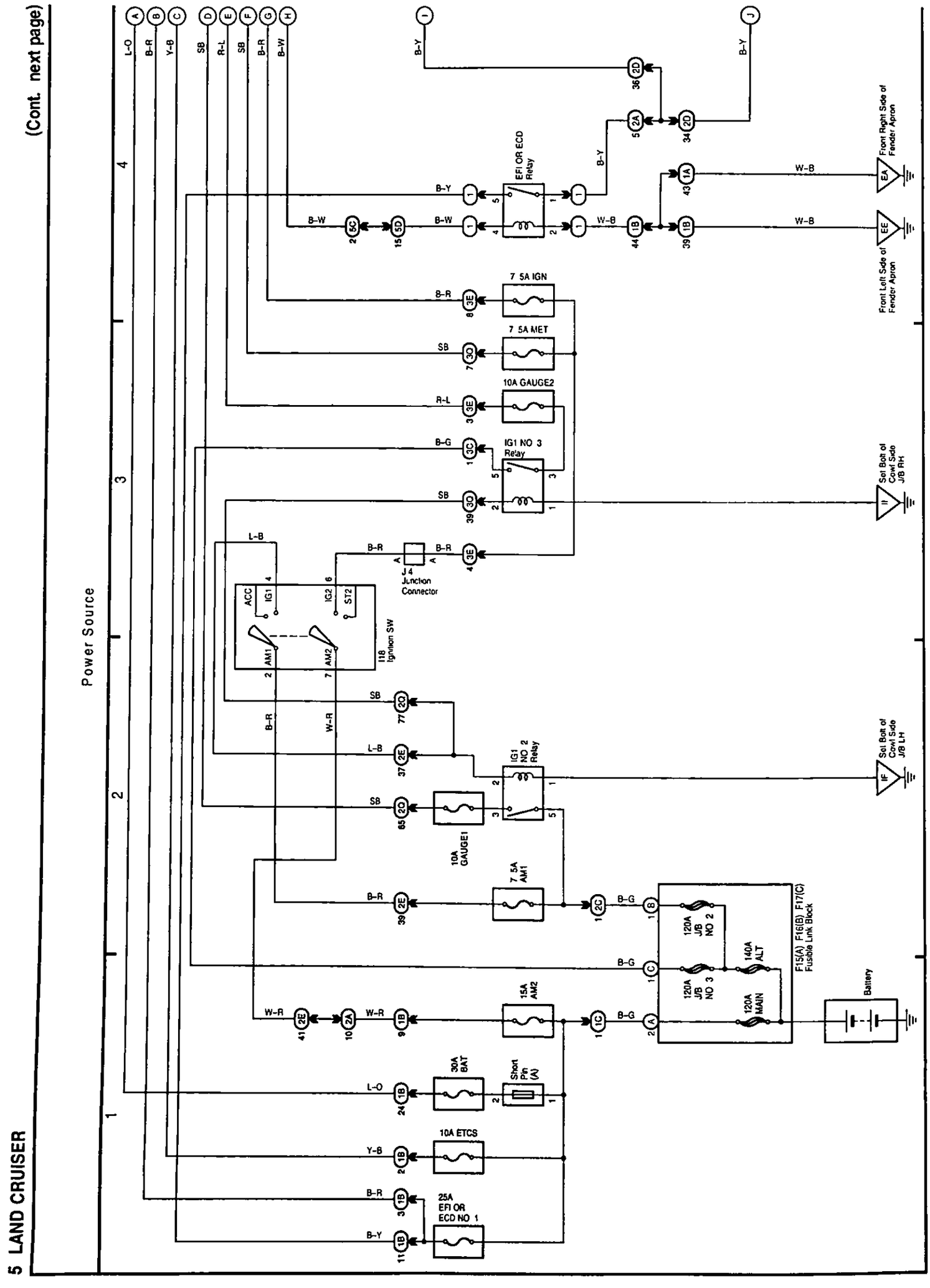
(Cont. next page)
Power Source
EFI OR ECD Relay
7.5A IGN
7.5A MET
10A GAUGE2
IG1 NO 3 Relay
J4 Junction Connector
118 Ignition SW
IG1 NO 2 Relay
10A GAUGE1
7.5A AM1
15A AM2
30A BAT
Short Pin (A)
10A ETCS
25A EFI OR ECD NO 1
120A J/B NO 2
120A J/B NO 3
140A ALT
120A MAIN
F15(A) F16(B) F17(C) Fusible Link Block
Battery
Front Right Side of Fender Apron
Front Left Side of Fender Apron
Set Bolt of Cowl Side J/B RH
Set Bolt of Cowl Side J/B LH
5 LAND CRUISER

(Cont. next page)

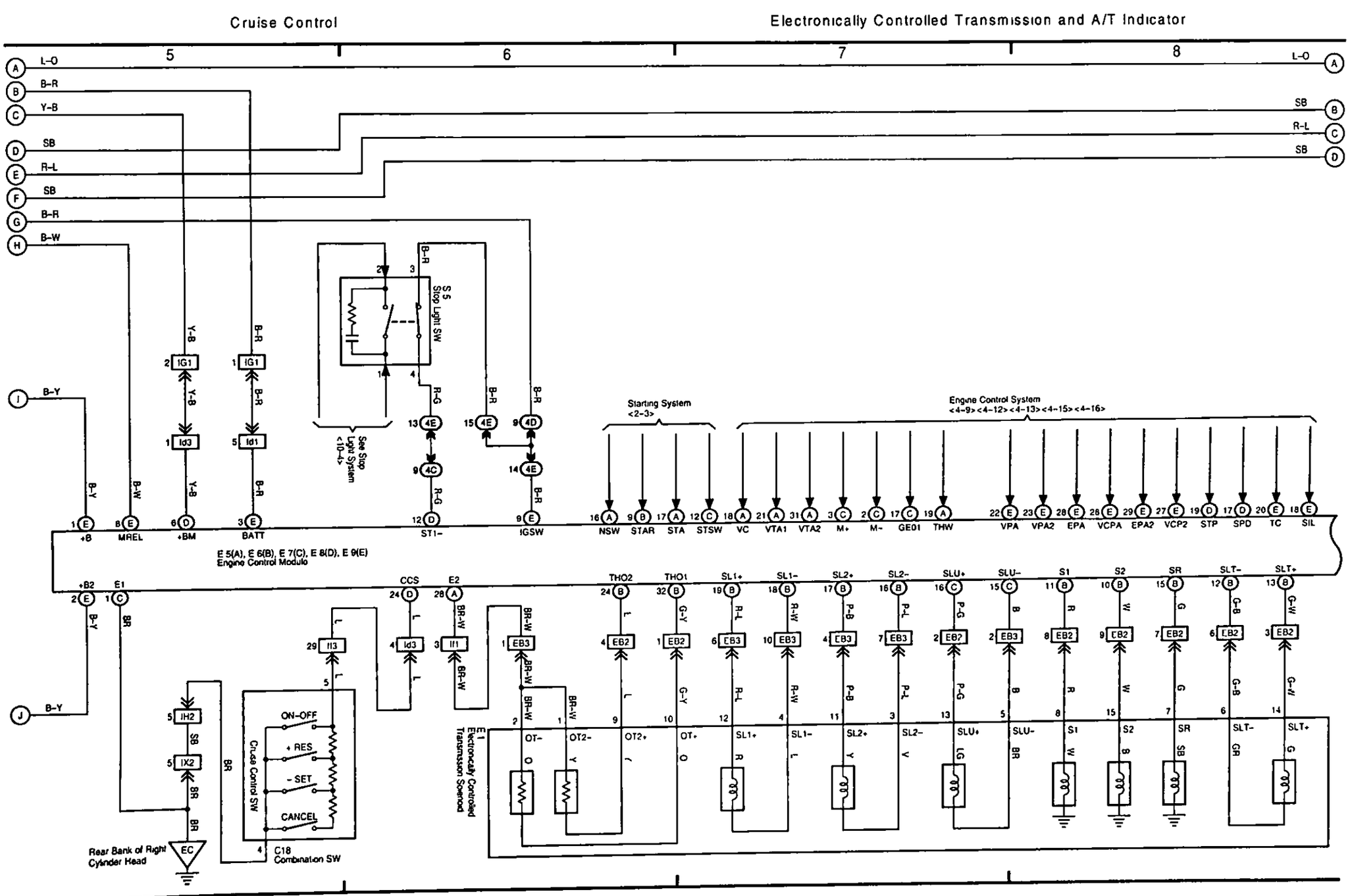

(Cont. next page)

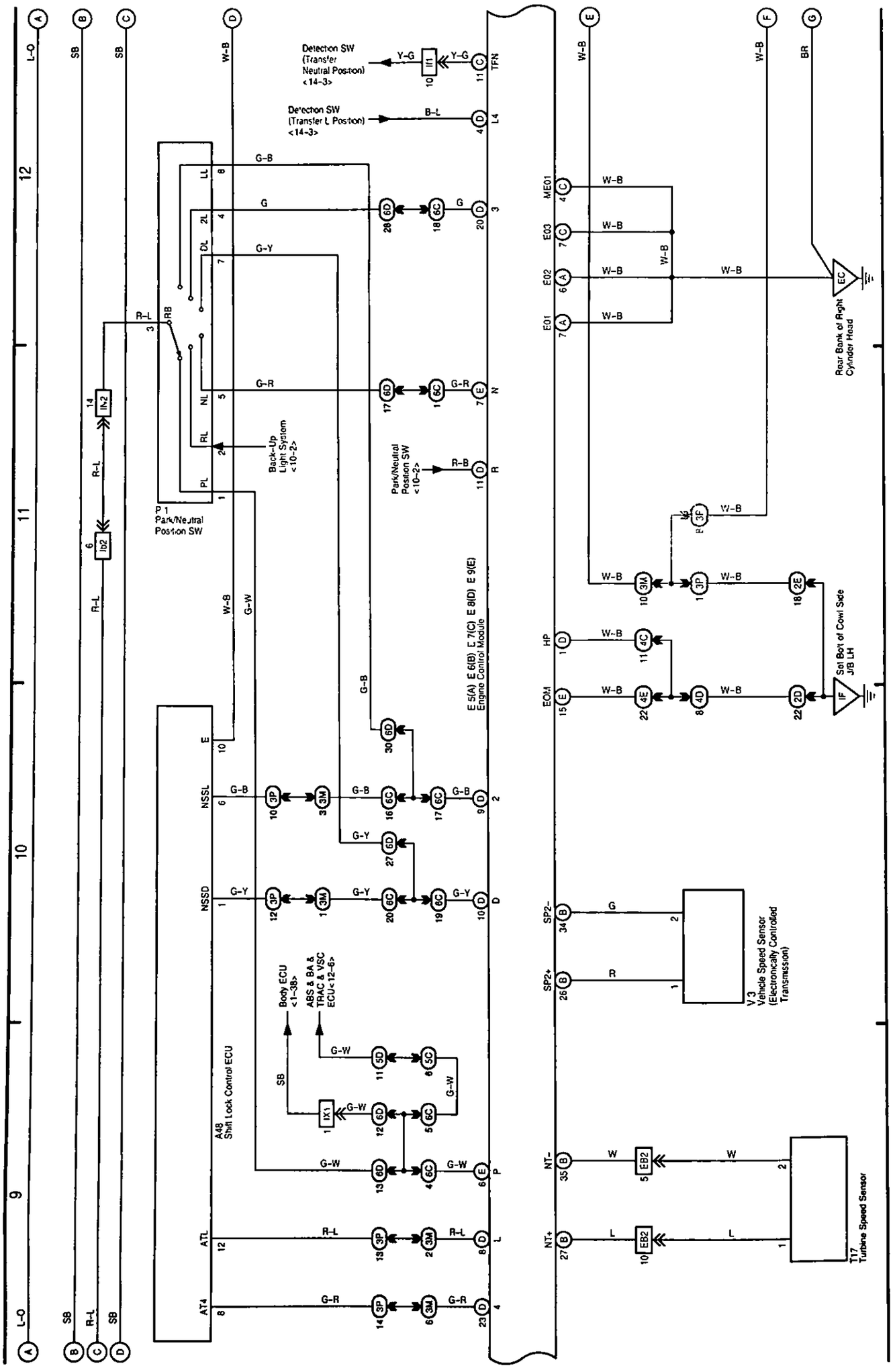

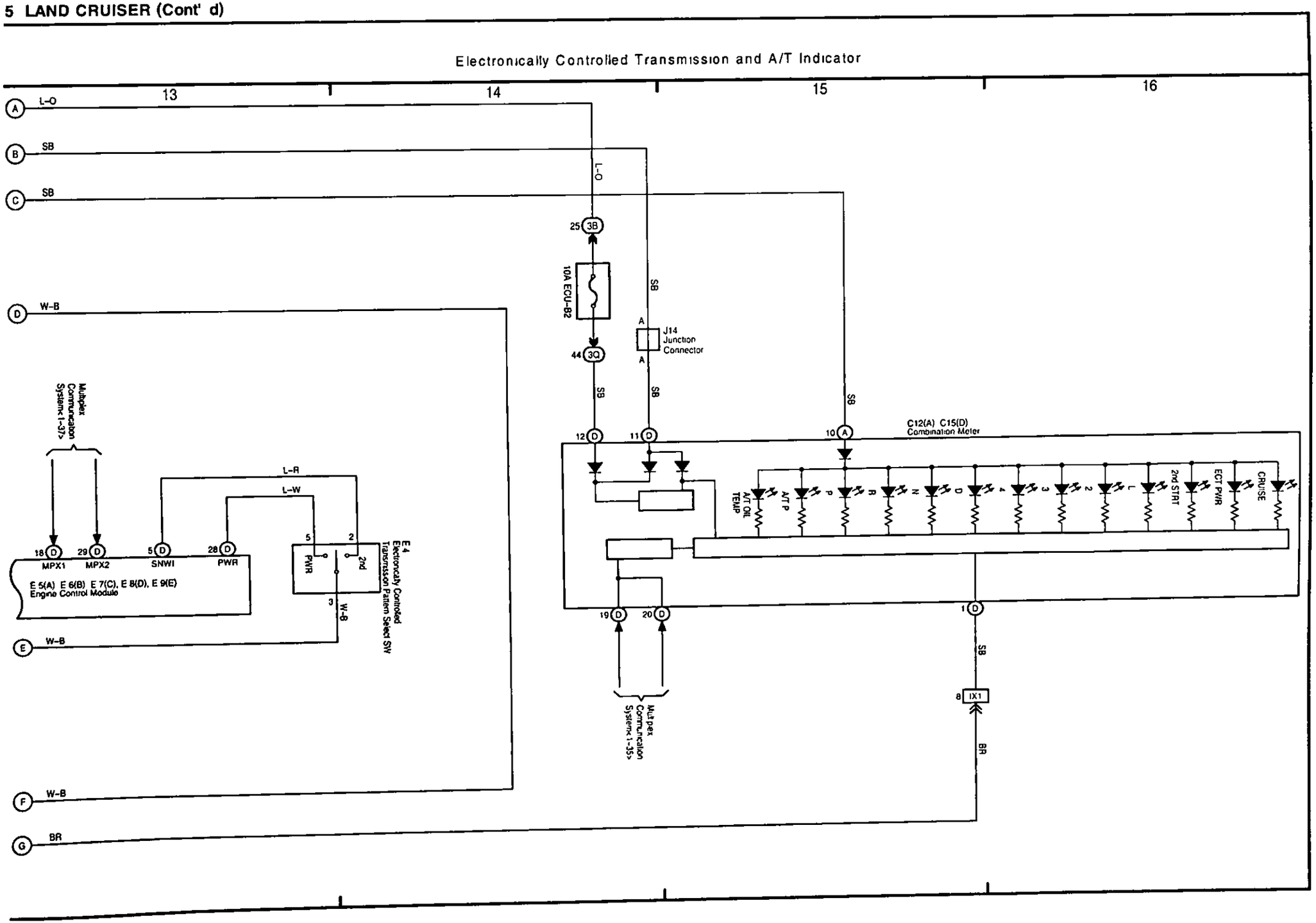
Electronically Controlled Transmission and A/T Indicator
13
14
15
16
A L-O
B SB
C SB
D W-B
E W-B
F W-B
G BR
25 3B
10A ECU-B2
44 3Q
A J14 Junction Connector A
L-O
SB
SB
SB
12 D
11 D
10 A
C12(A) C15(D) Combination Meter
A/T OIL TEMP
A/T P
P
R
N
D
4
3
2
L
2nd START
ECT PWR
CRUISE
19 D
20 D
1 D
8 IX1
SB
BR
Multiplex Communication System<1-35>
Multiplex Communication System<1-37>
L-R
L-W
18 D MPX1
29 D MPX2
5 D SNWI
28 D PWR
E 5(A) E 6(B) E 7(C), E 8(D), E 9(E) Engine Control Module
5 PWR
2 2nd
3 W-B
E4 Electronically Controlled Transmission Pattern Select SW

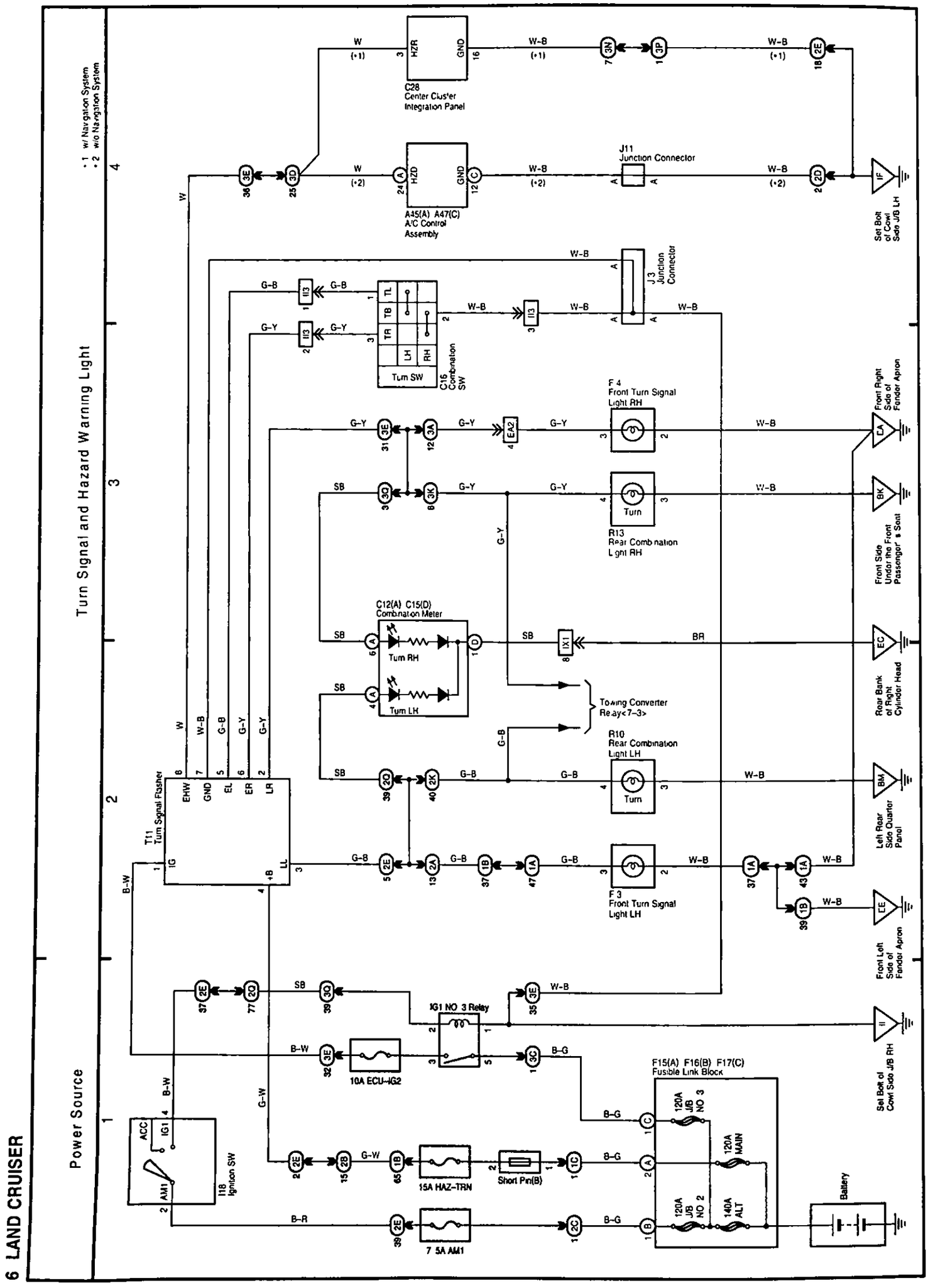
Turn Signal and Hazard Warning Light
Power Source
• 1 w/ Navigation System
• 2 w/o Navigation System
C28 Center Cluster Integration Panel
A45(A) A47(C) A/C Control Assembly
J11 Junction Connector
J3 Junction Connector
C16 Combination SW
Turn SW
F 4 Front Turn Signal Light RH
F 3 Front Turn Signal Light LH
R13 Rear Combination Light RH
R10 Rear Combination Light LH
C12(A) C15(D) Combination Meter
Turn RH
Turn LH
Towing Converter Relay<7-3>
T11 Turn Signal Flasher
IG1 NO 3 Relay
10A ECU-IG2
15A HAZ-TRN
7.5A AM1
Short Pin(B)
I18 Ignition SW
F15(A) F16(B) F17(C) Fusible Link Block
120A J/B NO 3
120A MAIN
120A J/B NO 2
140A ALT
Battery
Front Right Side of Fender Apron
Front Side Under the Front Passenger's Seat
Rear Bank of Right Cylinder Head
Left Rear Side Quarter Panel
Front Left Side of Fender Apron
Set Bolt of Cowl Side J/B LH
Set Bolt of Cowl Side J/B RH

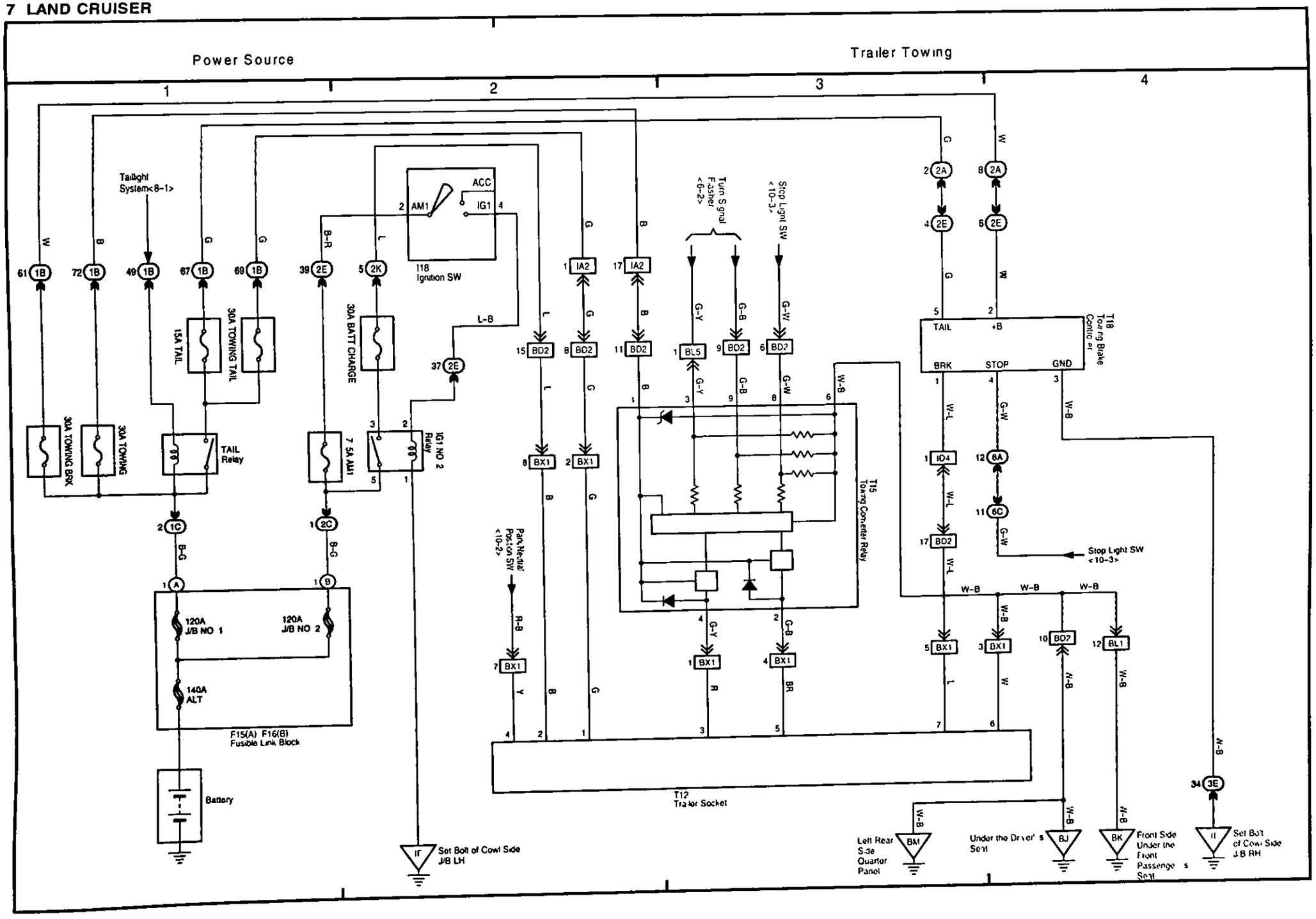
Power Source
Trailer Towing
1
2
3
4
Taillight System<8-1>
ACC
AM1
IG1
118 Ignition SW
Turn Signal Flasher <6-2>
Stop Light SW <10-3>
61 1B
72 1B
49 1B
67 1B
69 1B
39 2E
5 2K
1 IA2
17 IA2
2 2A
8 2A
4 2E
6 2E
30A TOWING BRK
30A TOWING
15A TAIL
30A TOWING TAIL
30A BATT CHARGE
TAIL Relay
7.5A AM1
IG1 NO 2 Relay
37 2E
15 BD2
8 BD2
11 BD2
1 BL5
9 BD2
6 BD2
T15 Towing Converter Relay
T18 Towing Brake Controller
TAIL
+B
BRK
STOP
GND
1 ID4
12 8A
11 6C
17 BD2
Stop Light SW <10-3>
2 1C
1 2C
B-G
1 A
1 B
120A J/B NO 1
120A J/B NO 2
140A ALT
F15(A) F16(B) Fusible Link Block
Battery
Park/Neutral Position SW <10-2>
R-B
7 BX1
8 BX1
2 BX1
5 BX1
3 BX1
1 BX1
4 BX1
10 BD7
12 BL1
T12 Trailer Socket
34 3E
IF
Set Bolt of Cowl Side J/B LH
Left Rear Side Quarter Panel
BM
Under the Driver's Seat
BJ
BK
Front Side Under the Front Passenger's Seat
II
Set Bolt of Cowl Side J/B RH

M

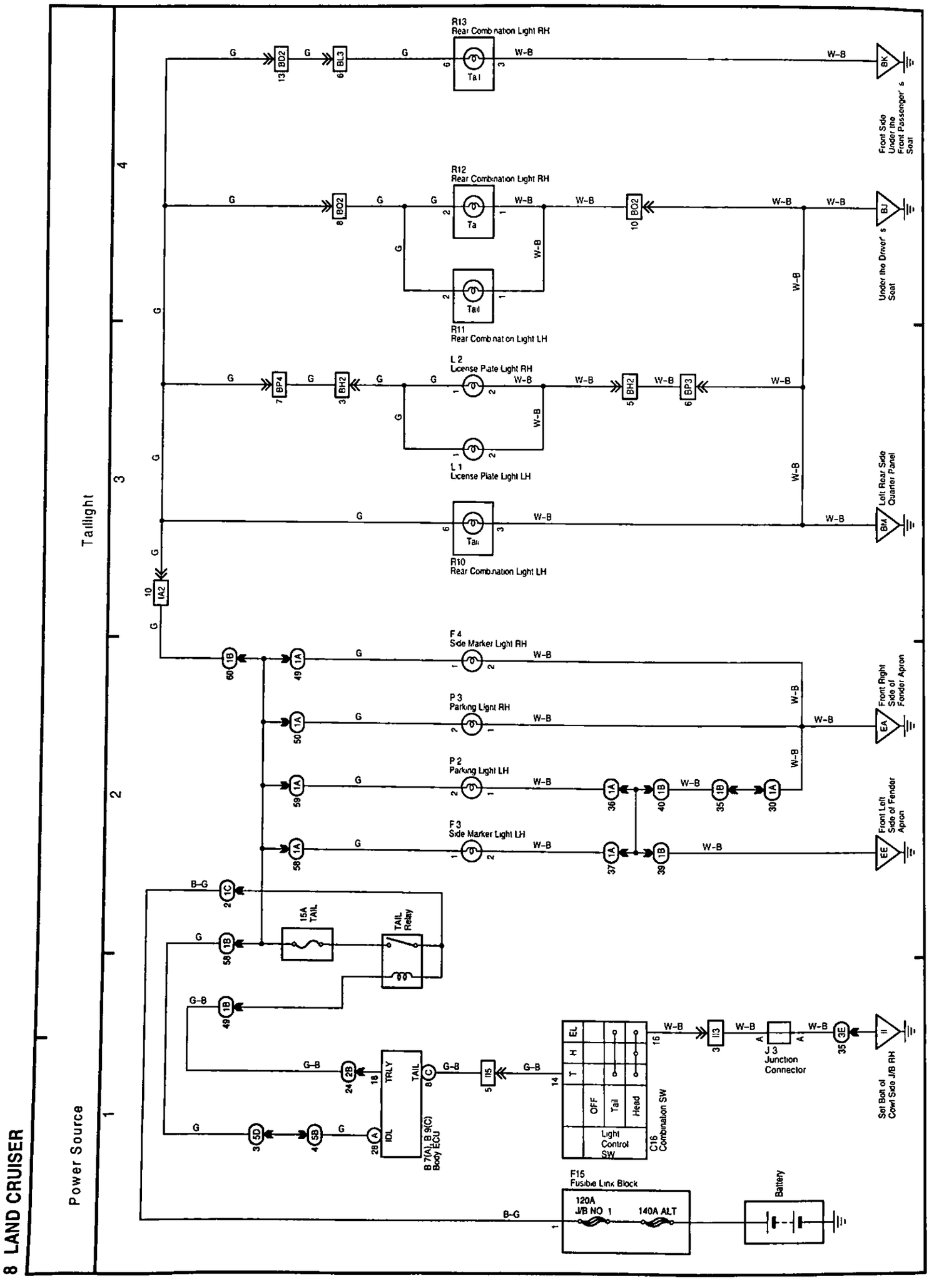
Taillight
Power Source
R13
Rear Combination Light RH
R12
Rear Combination Light RH
R11
Rear Combination Light LH
L2
License Plate Light RH
L1
License Plate Light LH
R10
Rear Combination Light LH
F4
Side Marker Light RH
P3
Parking Light RH
P2
Parking Light LH
F3
Side Marker Light LH
15A TAIL
TAIL Relay
TRLY
IDL
B7(A), B9(C) Body ECU
C16 Combination SW
Light Control SW
OFF
Tail
Head
J3 Junction Connector
F15 Fusible Link Block
120A J/B NO. 1
140A ALT
Battery
Front Side Under the Front Passenger's Seat
Under the Driver's Seat
Left Rear Side Quarter Panel
Front Right Side of Fender Apron
Front Left Side of Fender Apron
Set Bolt of Cowl Side J/B RH

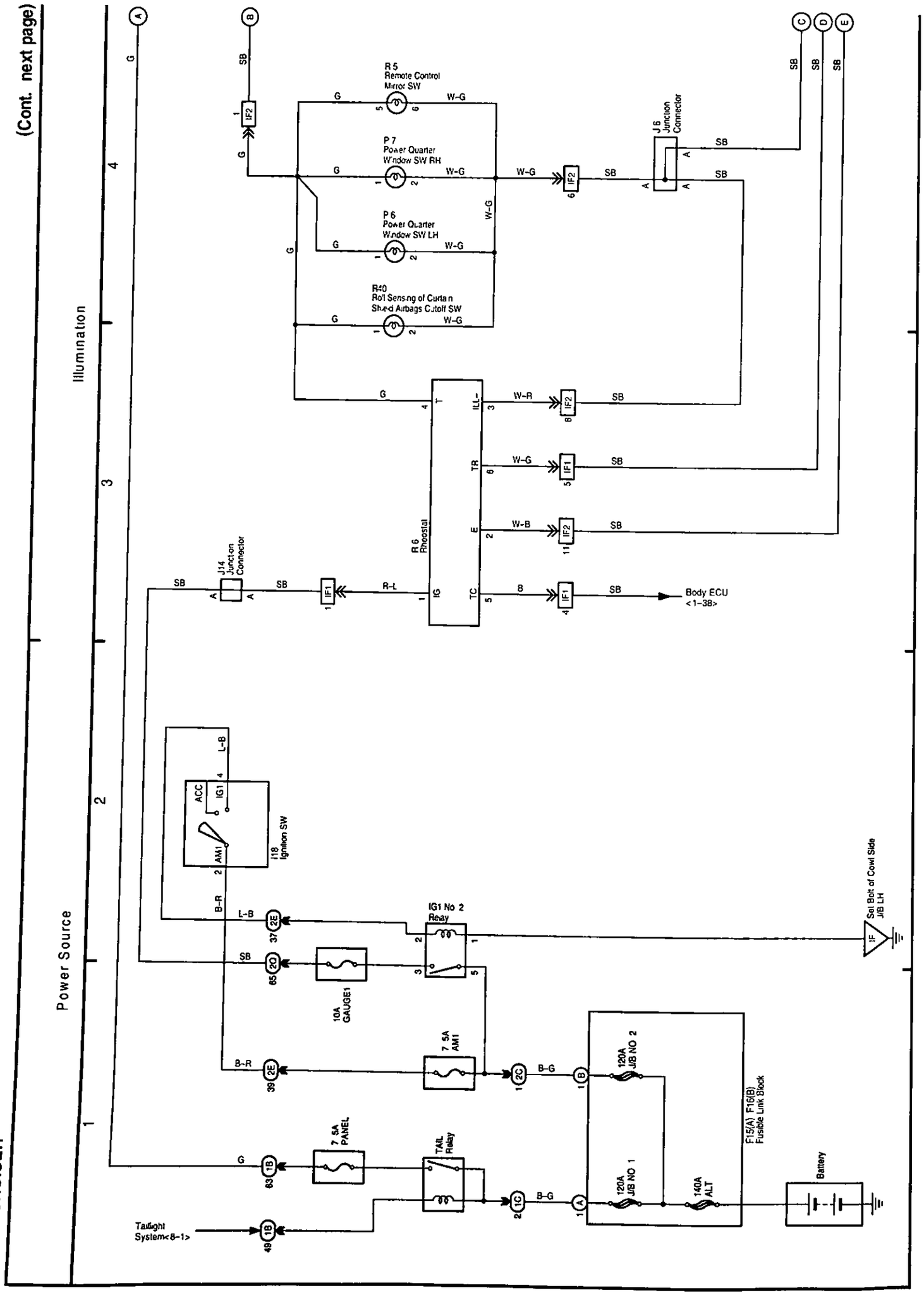
(Cont. next page)
Illumination
Power Source
R5
Remote Control Mirror SW
P7
Power Quarter Window SW RH
P6
Power Quarter Window SW LH
R40
Roof Sensing of Curtain Shield Airbags Cutoff SW
J6
Junction Connector
J14
Junction Connector
R6
Rheostat
I18
Ignition SW
IG1 No 2 Relay
10A GAUGE1
7.5A AM1
7.5A PANEL
TAIL Relay
120A J/B NO 2
120A J/B NO 1
140A ALT
F15(A) F16(B)
Fusible Link Block
Battery
Set Bolt of Cowl Side J/B LH
Body ECU
<1-38>
Taillight System<8-1>
9 LAND CRUISER

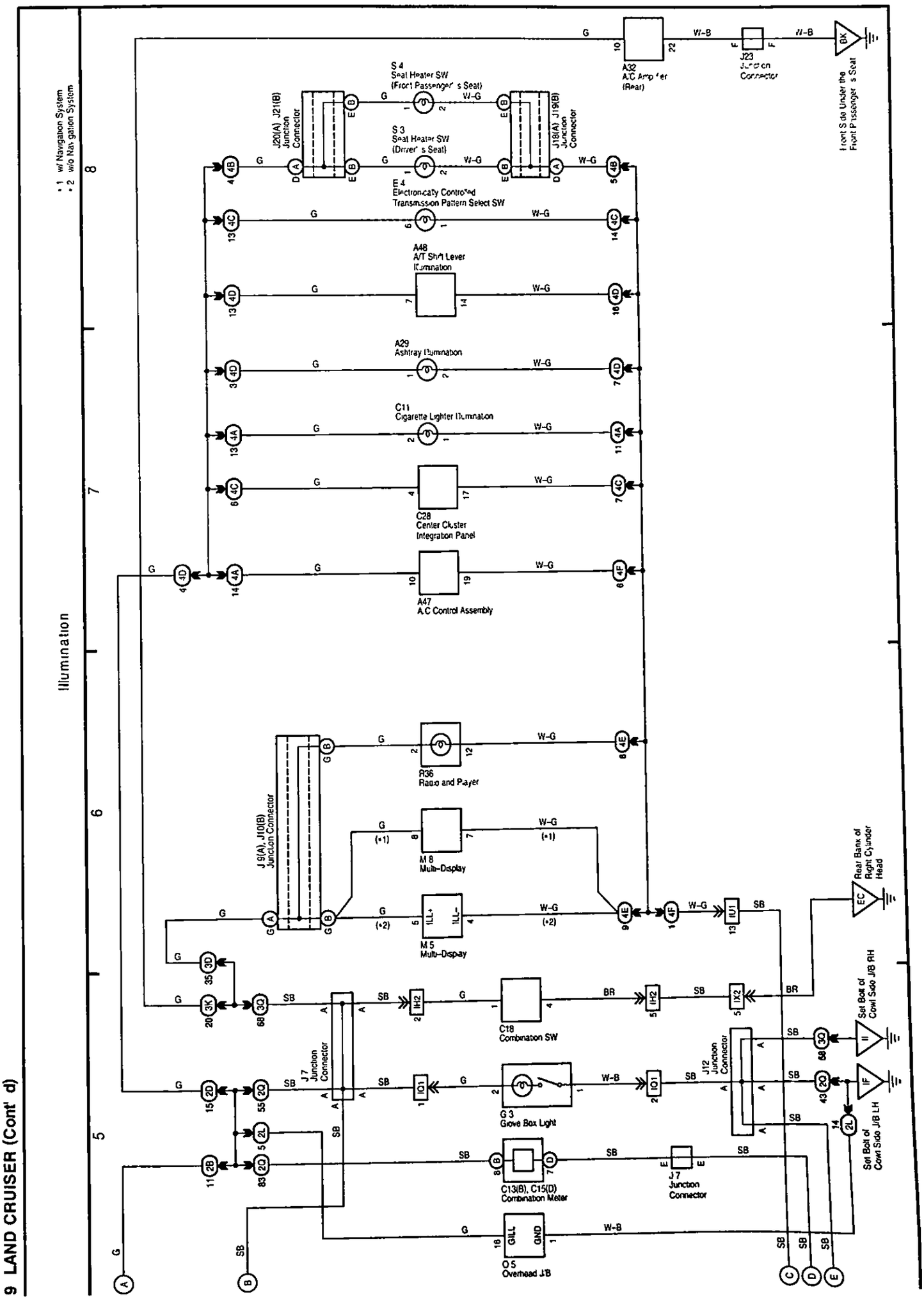
9 LAND CRUISER (Cont' d)
Illumination
• 1 w/ Navigation System
• 2 w/o Navigation System
S 4
Seat Heater SW
(Front Passenger's Seat)
S 3
Seat Heater SW
(Driver's Seat)
E 4
Electronically Controlled
Transmission Pattern Select SW
A48
A/T Shift Lever
Illumination
A29
Ashtray Illumination
C11
Cigarette Lighter Illumination
C28
Center Cluster
Integration Panel
A47
A/C Control Assembly
R36
Radio and Player
M 8
Multi-Display
M 5
Multi-Display
C18
Combination SW
G 3
Glove Box Light
C13(B), C15(D)
Combination Meter
O 5
Overhead J/B
A32
A/C Amplifier
(Rear)
J23
Junction
Connector
Front Side Under the
Front Passenger's Seat
J20(A), J21(B)
Junction
Connector
J18(A), J19(B)
Junction
Connector
J9(A), J10(B)
Junction Connector
J7
Junction
Connector
J12
Junction
Connector
Rear Bank of
Right Cylinder
Head
Set Bolt of
Cowl Side J/B RH
Set Bolt of
Cowl Side J/B LH
5
6
7
8

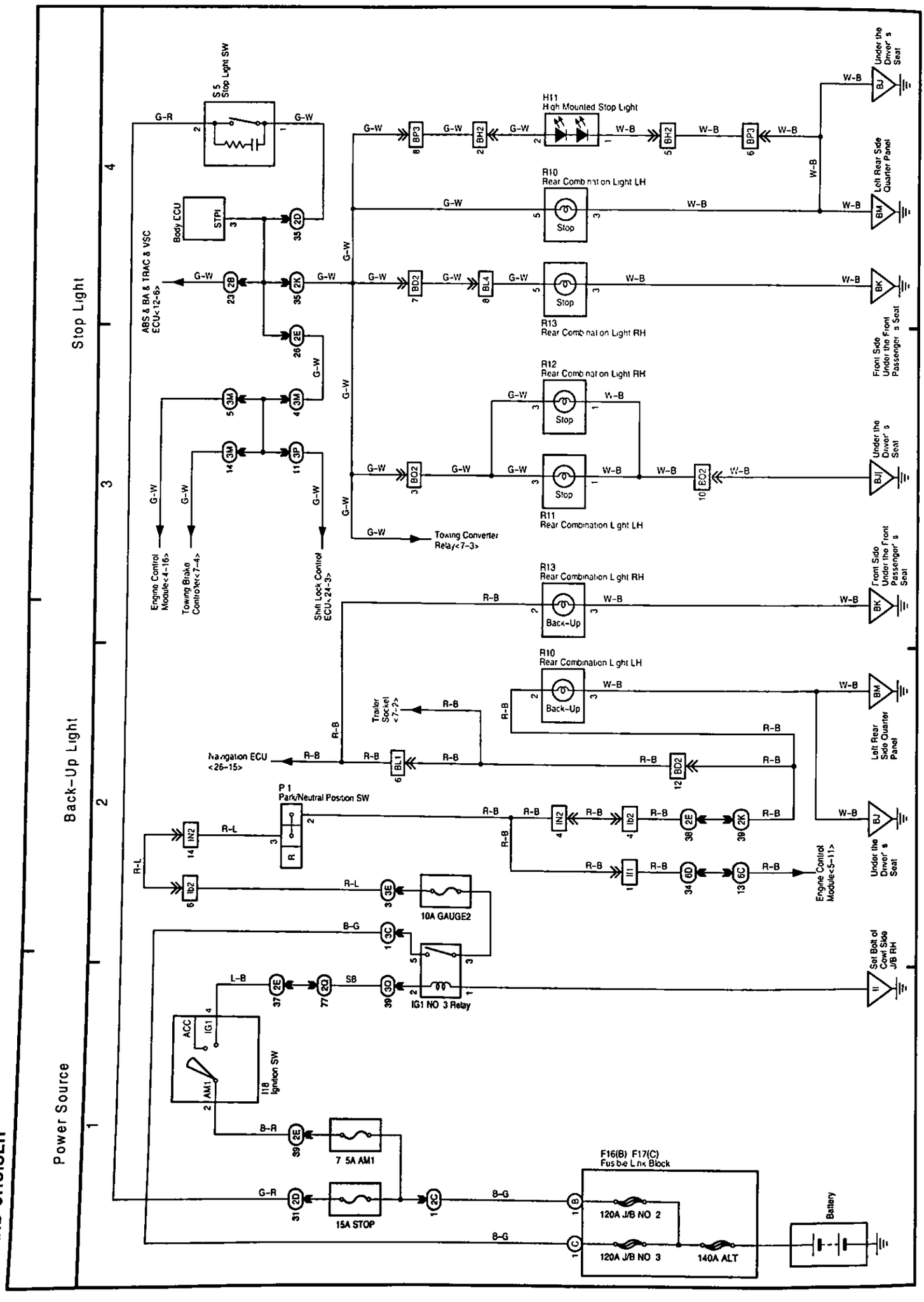
Stop Light
Back-Up Light
Power Source
S5 Stop Light SW
H11 High Mounted Stop Light
R10 Rear Combination Light LH
R13 Rear Combination Light RH
R12 Rear Combination Light RH
R11 Rear Combination Light LH
Body ECU
ABS & BA & TRAC & VSC ECU<12-6>
Engine Control Module<4-16>
Towing Brake Control<7-4>
Shift Lock Control ECU<24-3>
Towing Converter Relay<7-3>
Navigation ECU <26-15>
Trailer Socket <7-2>
P1 Park/Neutral Position SW
10A GAUGE2
IG1 NO 3 Relay
I18 Ignition SW
7 5A AM1
15A STOP
F16(B) F17(C) Fusible Link Block
120A J/B NO 2
120A J/B NO 3
140A ALT
Battery
Under the Driver's Seat
Left Rear Side Quarter Panel
Front Side Under the Front Passenger's Seat
Set Bolt of Cowl Side J/B RH
Engine Control Module<5-11>

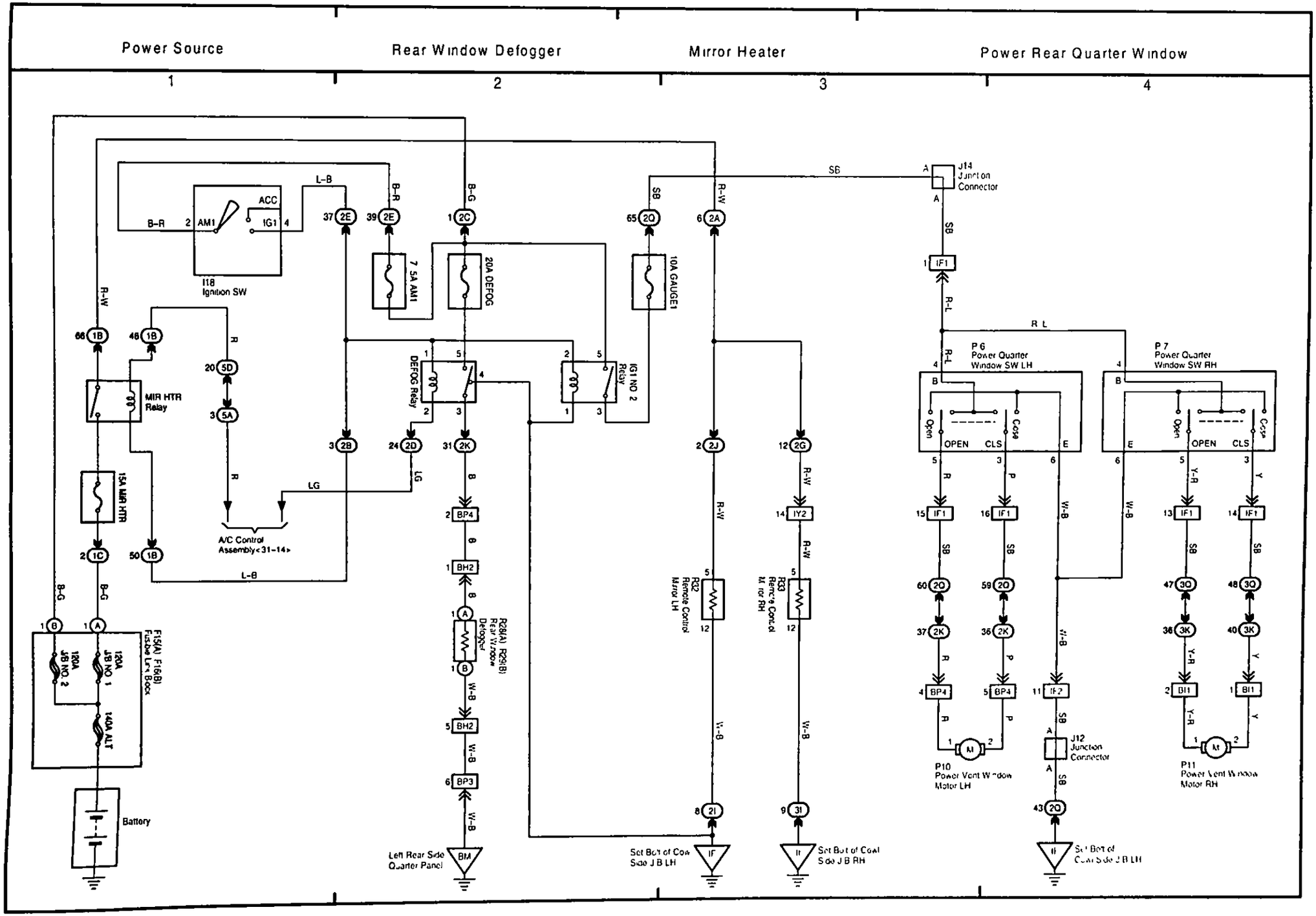
Power Source
Rear Window Defogger
Mirror Heater
Power Rear Quarter Window
1
2
3
4
I18
Ignition SW
AM1
ACC
IG1
7.5A AM1
20A DEFOG
10A GAUGE1
DEFOG Relay
IG1 NO 2 Relay
MIR HTR Relay
15A MIR HTR
A/C Control Assembly<31-14>
F15(A) F16(B) Fusible Link Block
120A J/B NO. 2
120A J/B NO. 1
140A ALT
Battery
R28(A) R29(B) Rear Window Defogger
Left Rear Side Quarter Panel
R32 Remote Control Mirror LH
R33 Remote Control Mirror RH
Set Bolt of Cowl Side J/B LH
Set Bolt of Cowl Side J/B RH
J14 Junction Connector
P6 Power Quarter Window SW LH
P7 Power Quarter Window SW RH
OPEN
CLS
Open
Close
P10 Power Vent Window Motor LH
J12 Junction Connector
P11 Power Vent Window Motor RH

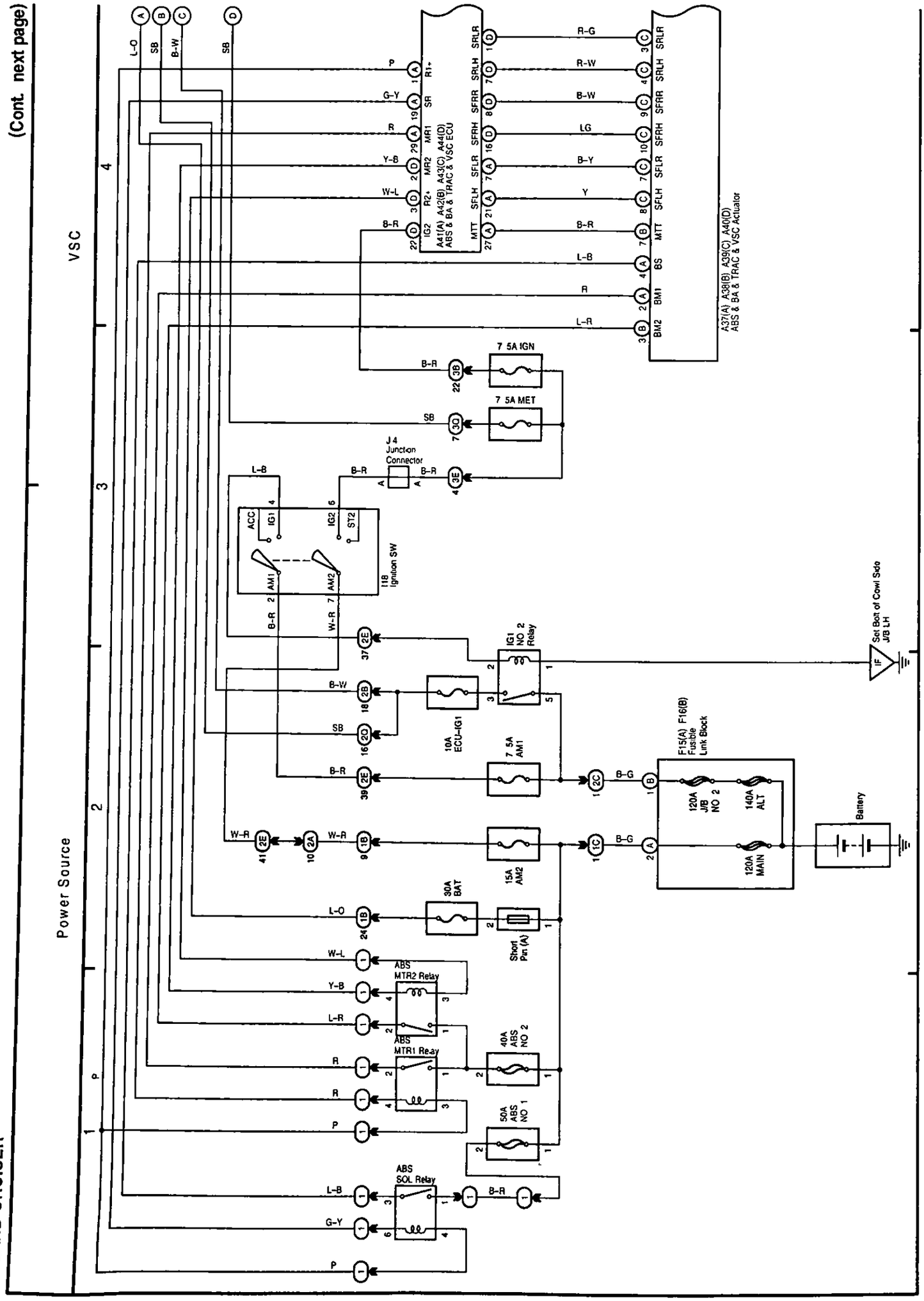
(Cont. next page)
VSC
Power Source
A37(A) A38(B) A39(C) A40(D)
ABS & BA & TRAC & VSC Actuator
A41(A) A42(B) A43(C) A44(D)
ABS & BA & TRAC & VSC ECU
7 5A IGN
7 5A MET
J4
Junction
Connector
ACC
IG1
IG2
ST2
AM1
AM2
I18
Ignition SW
IG1 NO 2 Relay
10A ECU-IG1
7 5A AM1
15A AM2
30A BAT
Short Pin (A)
ABS MTR2 Relay
ABS MTR1 Relay
ABS SOL Relay
40A ABS NO 2
50A ABS NO 1
F15(A) F16(B)
Fusible Link Block
120A J/B NO 2
140A ALT
120A MAIN
Battery
Set Bolt of Cowl Side J/B LH

(Cont. next page)

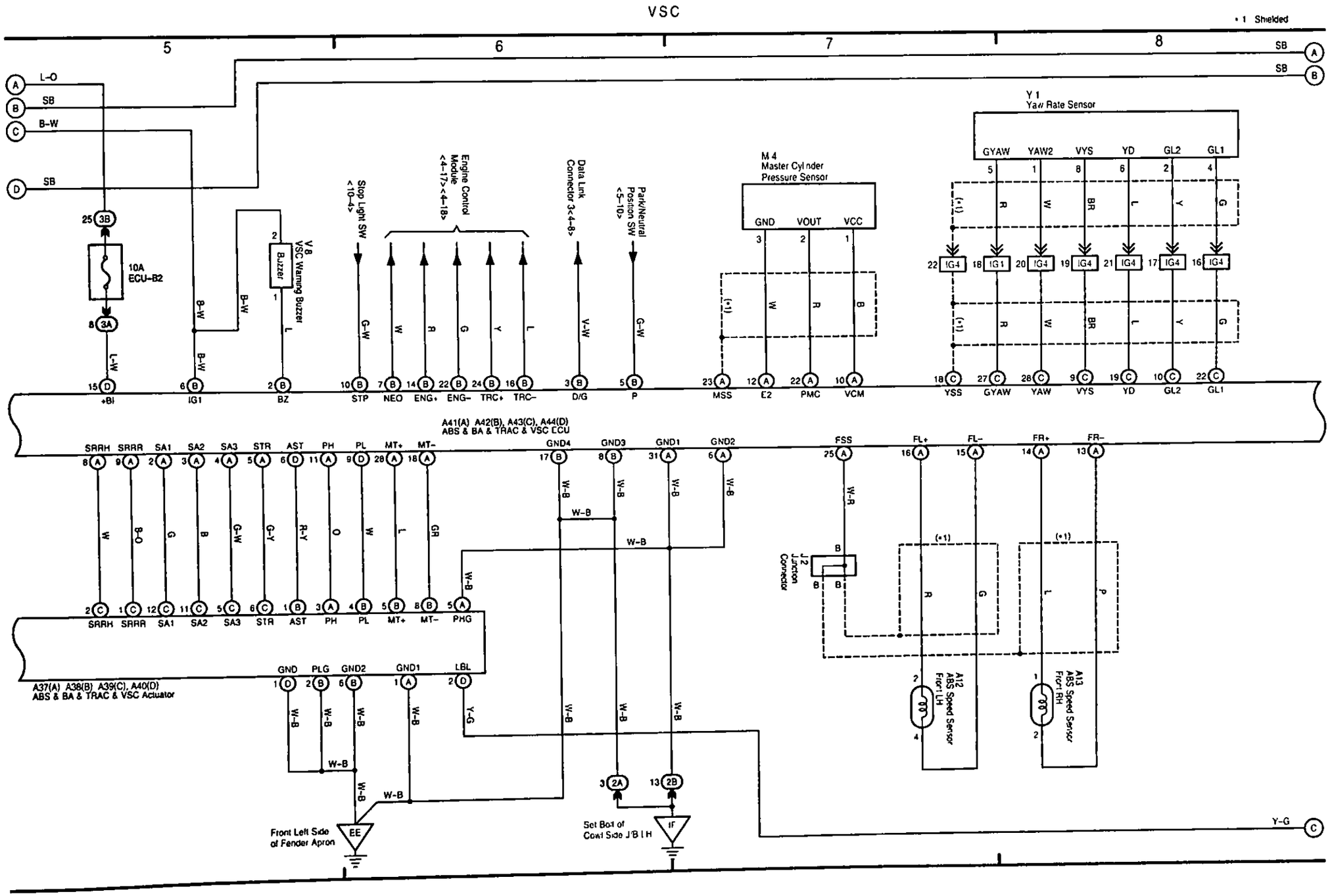

(Cont. next page)

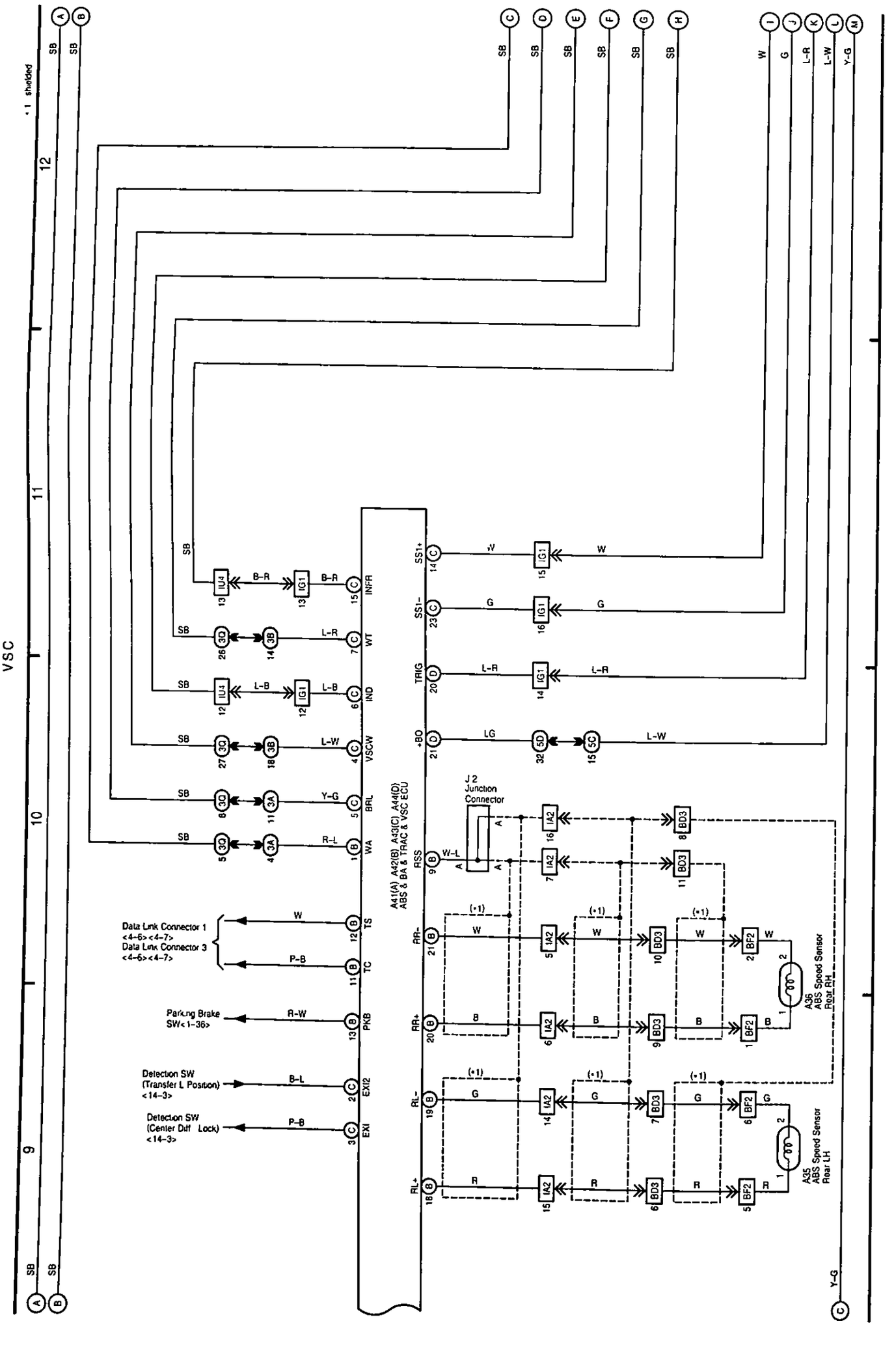

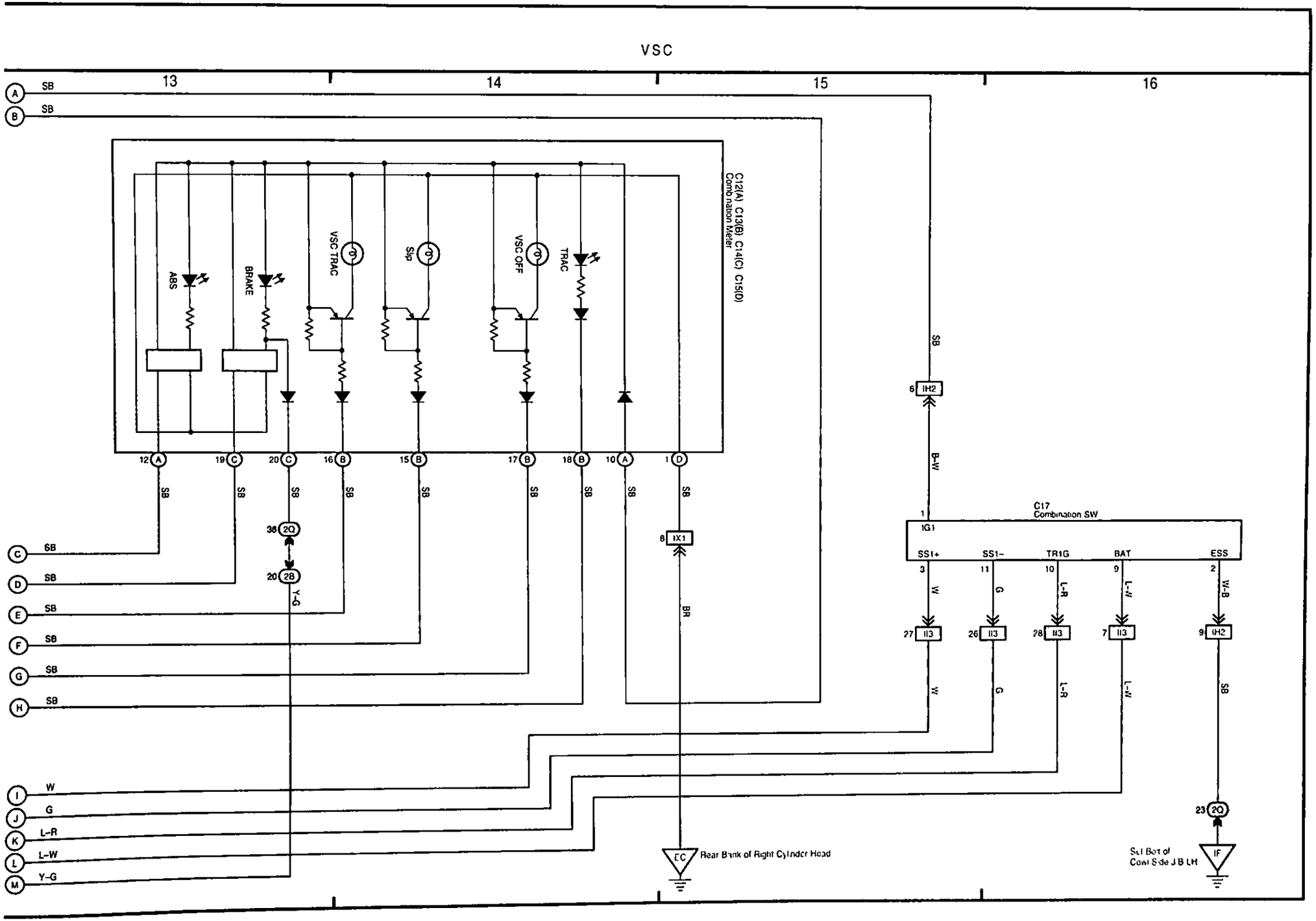
VSC
13
14
15
16
C12(A) C13(B) C14(C) C15(D)
Combination Meter
ABS
BRAKE
VSC TRAC
Slip
VSC OFF
TRAC
C17
Combination SW
IG1
SS1+
SS1-
TR1G
BAT
ESS
IH2
IX1
II3
2Q
2B
Rear Bank of Right Cylinder Head
Sel Bot of
Cowl Side J B LH
IF
SB
B-W
W
G
L-R
L-W
Y-G
BR

M OVERALL ELECTRICAL WIRING DIAGRAM

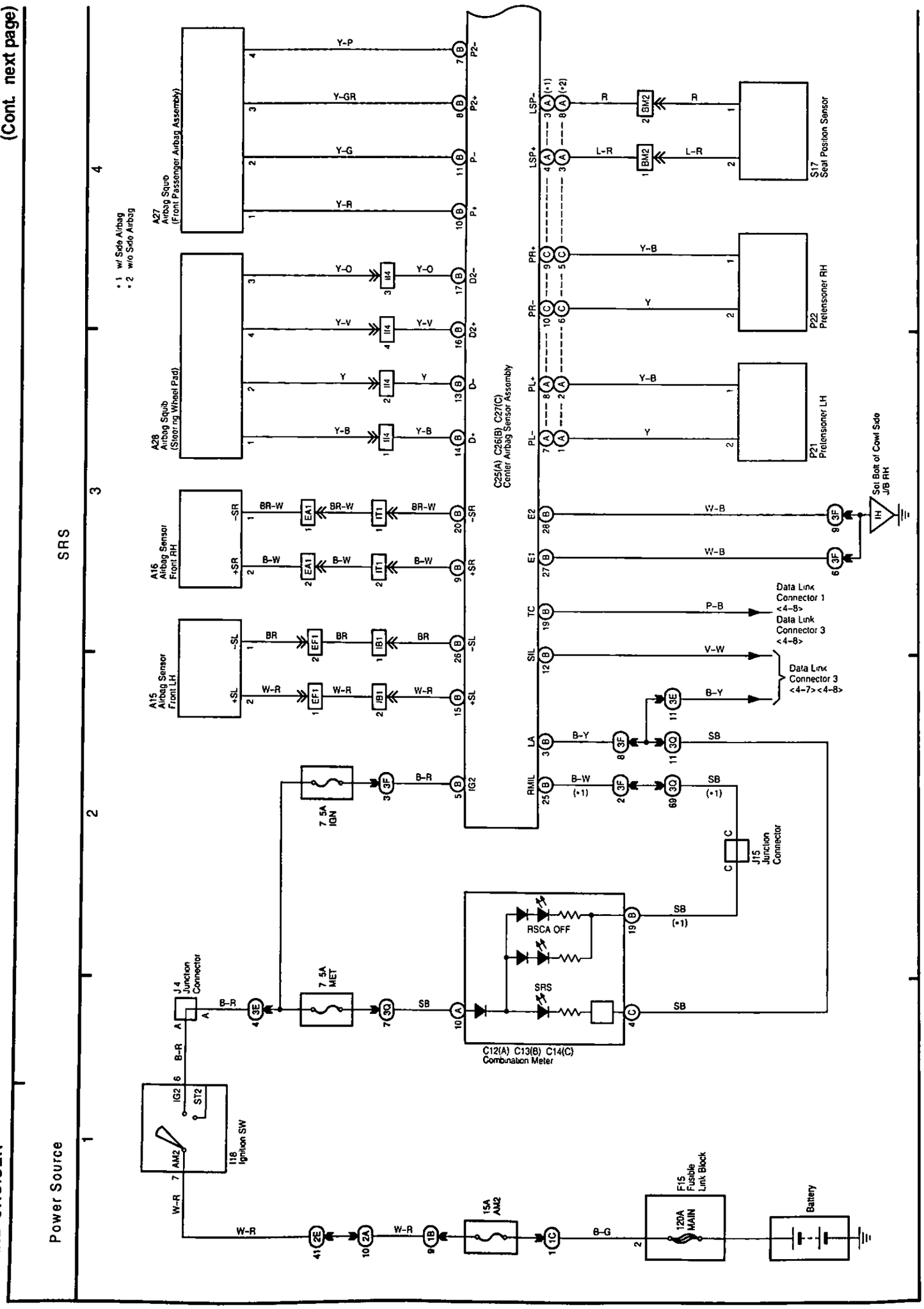

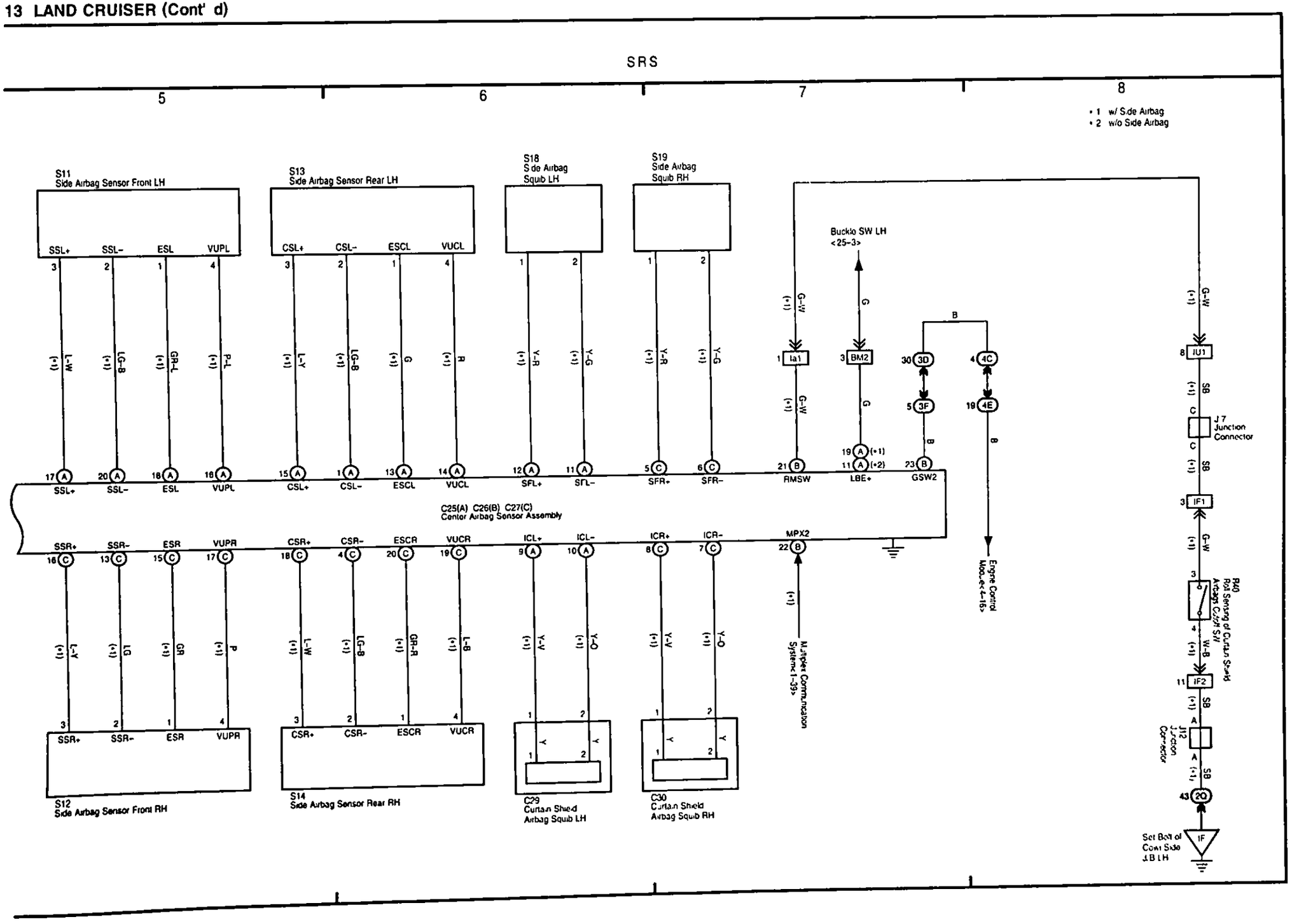
SRS
5
6
7
8
• 1 w/ Side Airbag
• 2 w/o Side Airbag
S11
Side Airbag Sensor Front LH
SSL+
SSL-
ESL
VUPL
S13
Side Airbag Sensor Rear LH
CSL+
CSL-
ESCL
VUCL
S18
Side Airbag
Squib LH
S19
Side Airbag
Squib RH
Buckle SW LH
<25-3>
C25(A) C26(B) C27(C)
Center Airbag Sensor Assembly
SSR+
SSR-
ESR
VUPR
CSR+
CSR-
ESCR
VUCR
ICL+
ICL-
ICR+
ICR-
MPX2
RMSW
LBE+
GSW2
SFL+
SFL-
SFR+
SFR-
S12
Side Airbag Sensor Front RH
S14
Side Airbag Sensor Rear RH
C29
Curtain Shield
Airbag Squib LH
C30
Curtain Shield
Airbag Squib RH
Multiplex Communication
System<1-39>
Engine Control
Module<4-16>
J7
Junction
Connector
J12
Junction
Connector
R40
Roll Sensing of Curtain Shield
Airbags Cutoff SW
Seat Belt of
Front Side
J/B LH

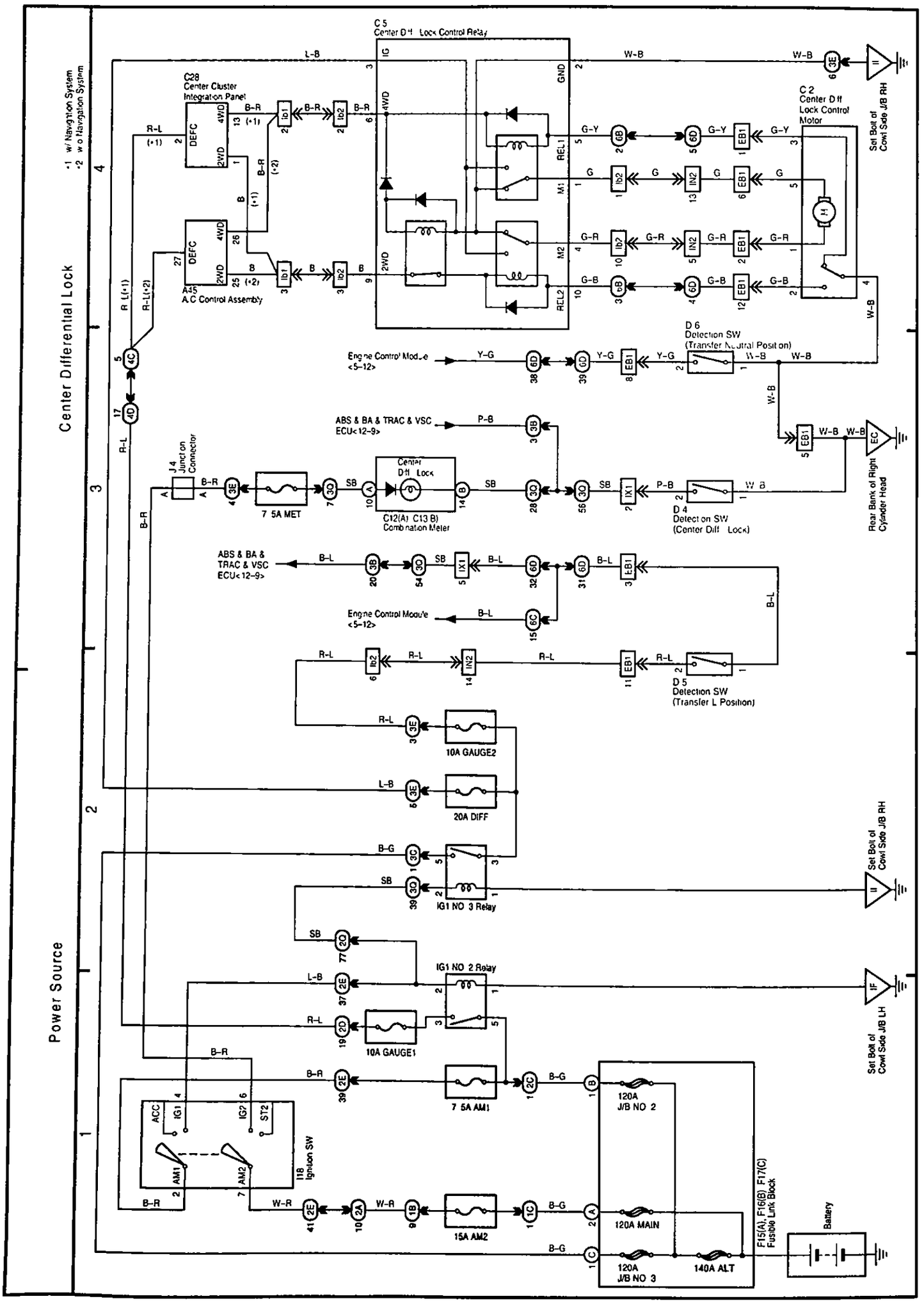
Center Differential Lock
Power Source
*1 w/ Navigation System
*2 w/o Navigation System
C5 Center Diff Lock Control Relay
C28 Center Cluster Integration Panel
C2 Center Diff Lock Control Motor
A4 A/C Control Assembly
D6 Detection SW (Transfer Neutral Position)
D4 Detection SW (Center Diff Lock)
D5 Detection SW (Transfer L Position)
Engine Control Module <5-12>
ABS & BA & TRAC & VSC ECU<12-9>
J4 Junction Connector
C12(A) C13(B) Combination Meter
Rear Bank of Right Cylinder Head
Set Bolt of Cowl Side J/B RH
Set Bolt of Cowl Side J/B LH
7.5A MET
10A GAUGE2
20A DIFF
10A GAUGE1
7.5A AM1
15A AM2
IG1 NO.3 Relay
IG1 NO.2 Relay
H18 Ignition SW
120A J/B NO.2
120A J/B NO.3
120A MAIN
140A ALT
F15(A), F16(B), F17(C) Fusible Link Block
Battery

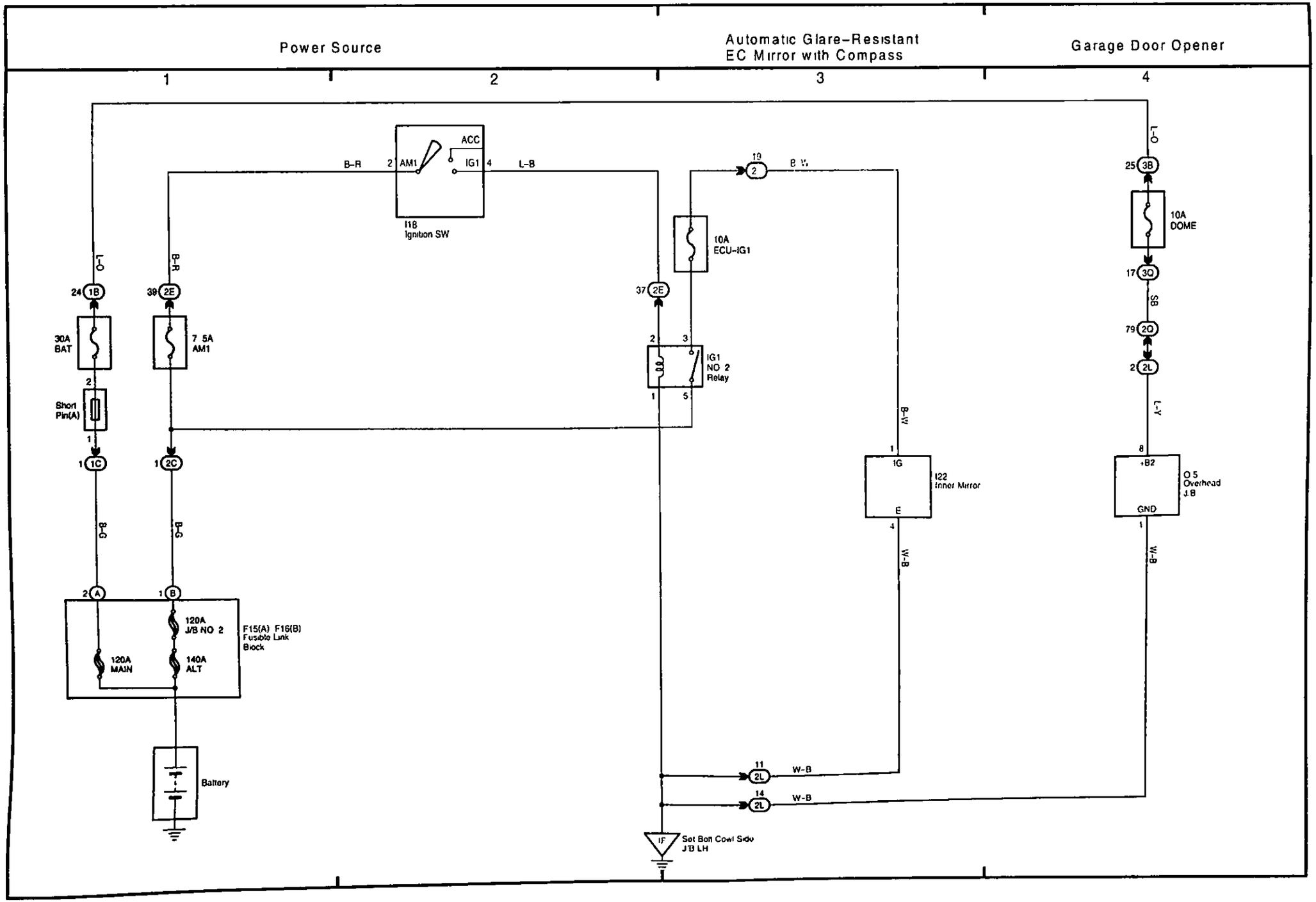
Power Source
Automatic Glare-Resistant EC Mirror with Compass
Garage Door Opener
1
2
3
4
ACC
AM1
IG1
B-R
L-B
I18
Ignition SW
10A ECU-IG1
IG1 NO. 2 Relay
30A BAT
7.5A AM1
Short Pin(A)
120A J/B NO. 2
120A MAIN
140A ALT
F15(A) F16(B) Fusible Link Block
Battery
I22 Inner Mirror
10A DOME
O.5 Overhead J.B
+B2
GND
IG
E
L-O
B-W
B-G
L-Y
W-B
SB
IF
Set Belt Cowl Side J/B LH

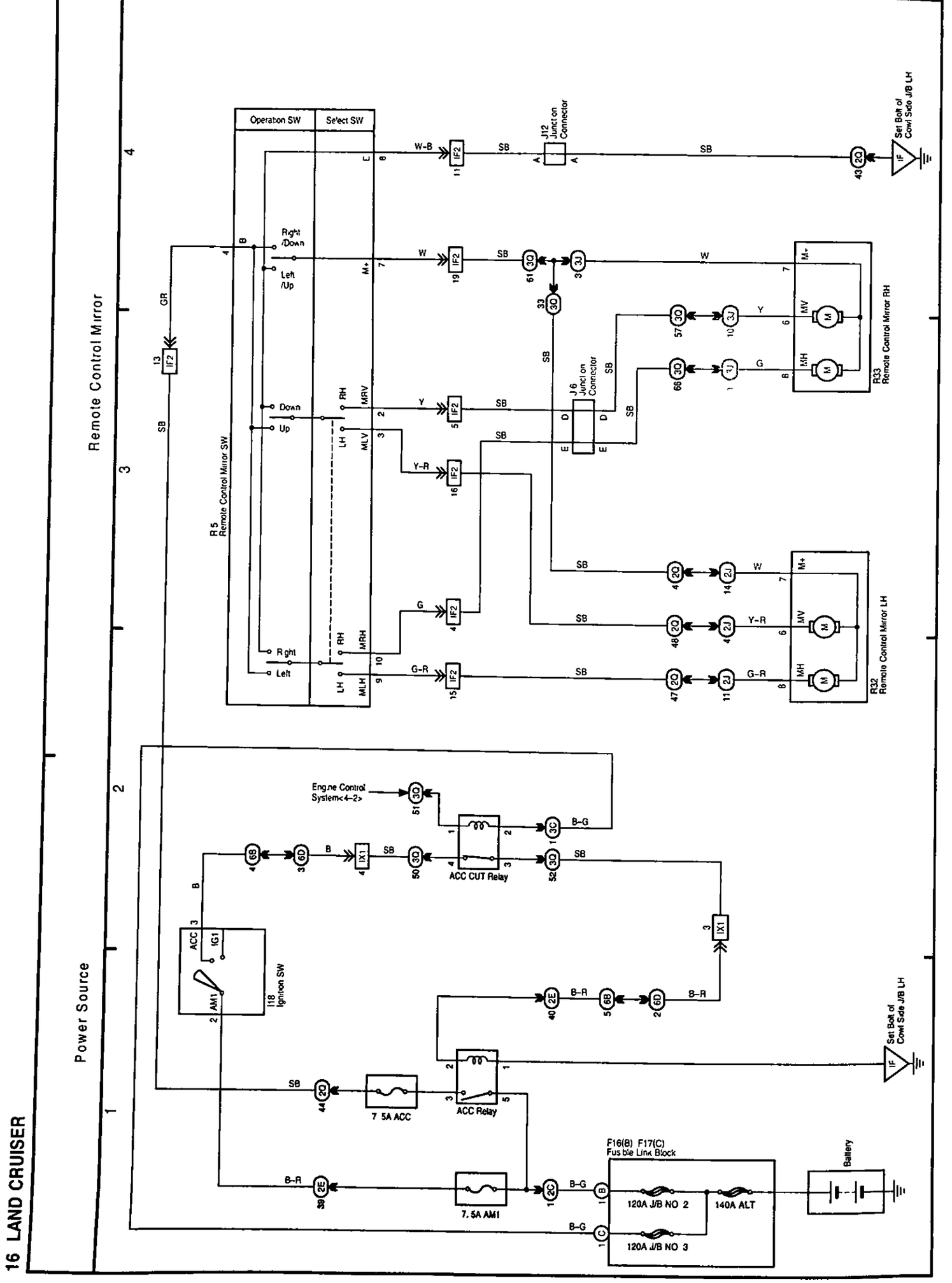
Remote Control Mirror
Power Source
Operation SW
Select SW
Right /Down
Left /Up
Down
Up
Right
Left
R5 Remote Control Mirror SW
J12 Junction Connector
J6 Junction Connector
R33 Remote Control Mirror RH
R32 Remote Control Mirror LH
Set Bolt of Cowl Side J/B LH
Engine Control System<4-2>
ACC CUT Relay
I18 Ignition SW
7.5A ACC
ACC Relay
7.5A AM1
F16(B) F17(C) Fusible Link Block
120A J/B NO 2
140A ALT
120A J/B NO 3
Battery

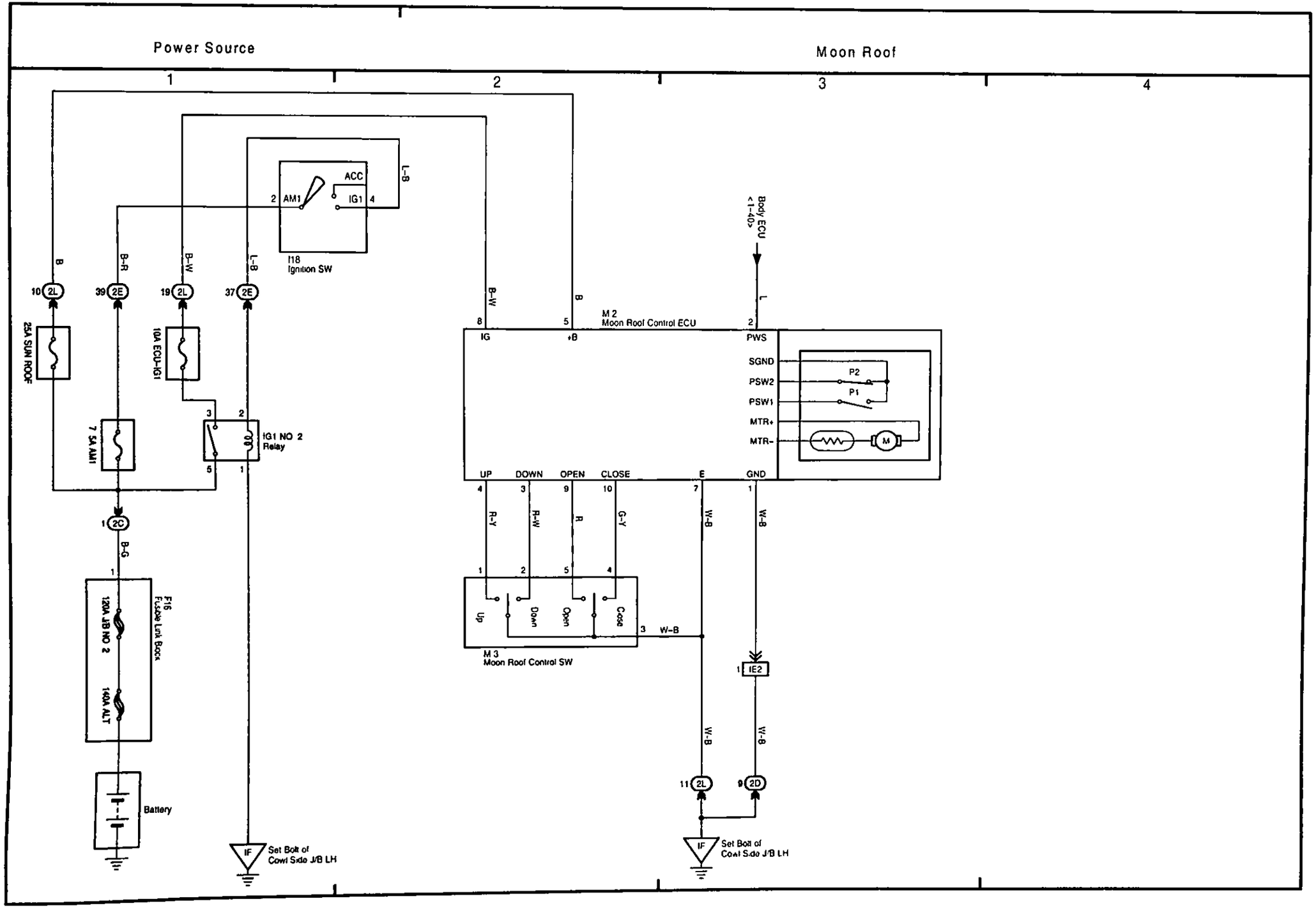
Power Source
Moon Roof
1
2
3
4
I18
Ignition SW
ACC
AM1
IG1
L-B
B
B-R
B-W
L-B
25A SUN ROOF
10A ECU-IG1
7.5A AM1
IG1 NO 2
Relay
B-G
F16
Fusible Link Block
120A J/B NO 2
140A ALT
Battery
IF
Set Bolt of
Cowl Side J/B LH
Body ECU
<1-40>
M 2
Moon Roof Control ECU
IG
+B
PWS
SGND
PSW2
PSW1
MTR+
MTR-
P2
P1
M
UP
DOWN
OPEN
CLOSE
E
GND
R-Y
R-W
R
G-Y
W-B
Up
Down
Open
Close
M 3
Moon Roof Control SW
IE2
Set Bolt of
Cowl Side J/B LH

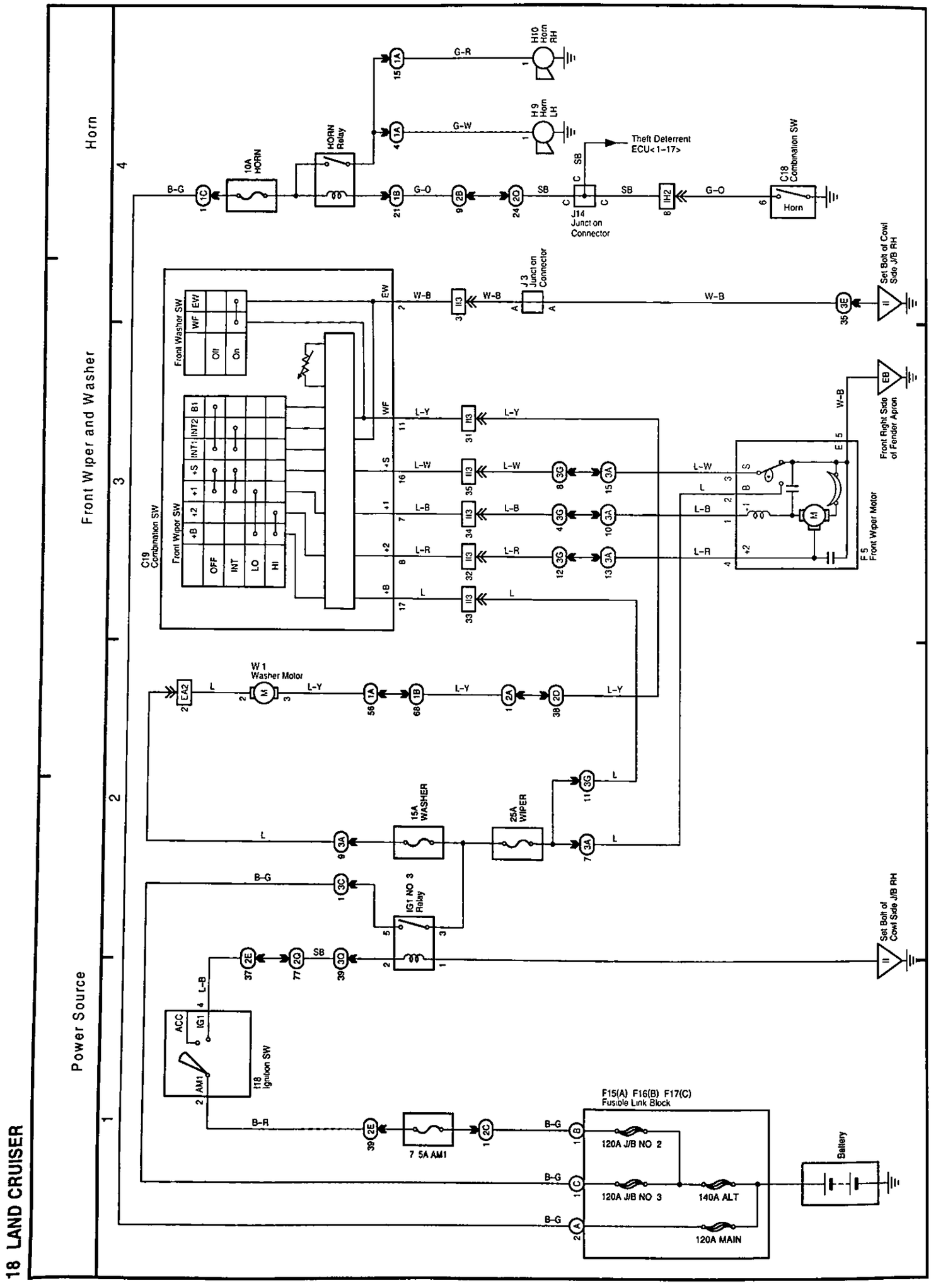
Horn
Front Wiper and Washer
Power Source
1
2
3
4
10A HORN
HORN Relay
H10 Horn RH
H9 Horn LH
Theft Deterrent ECU<1-17>
C18 Combination SW
Horn
J14 Junction Connector
J3 Junction Connector
Set Bolt of Cowl Side J/B RH
Front Right Side of Fender Apron
EB
F5 Front Wiper Motor
C19 Combination SW
Front Wiper SW
Front Washer SW
W1 Washer Motor
15A WASHER
25A WIPER
IG1 NO 3 Relay
I18 Ignition SW
ACC
IG1
AM1
7 5A AM1
F15(A) F16(B) F17(C) Fusible Link Block
120A J/B NO 2
120A J/B NO 3
140A ALT
120A MAIN
Battery

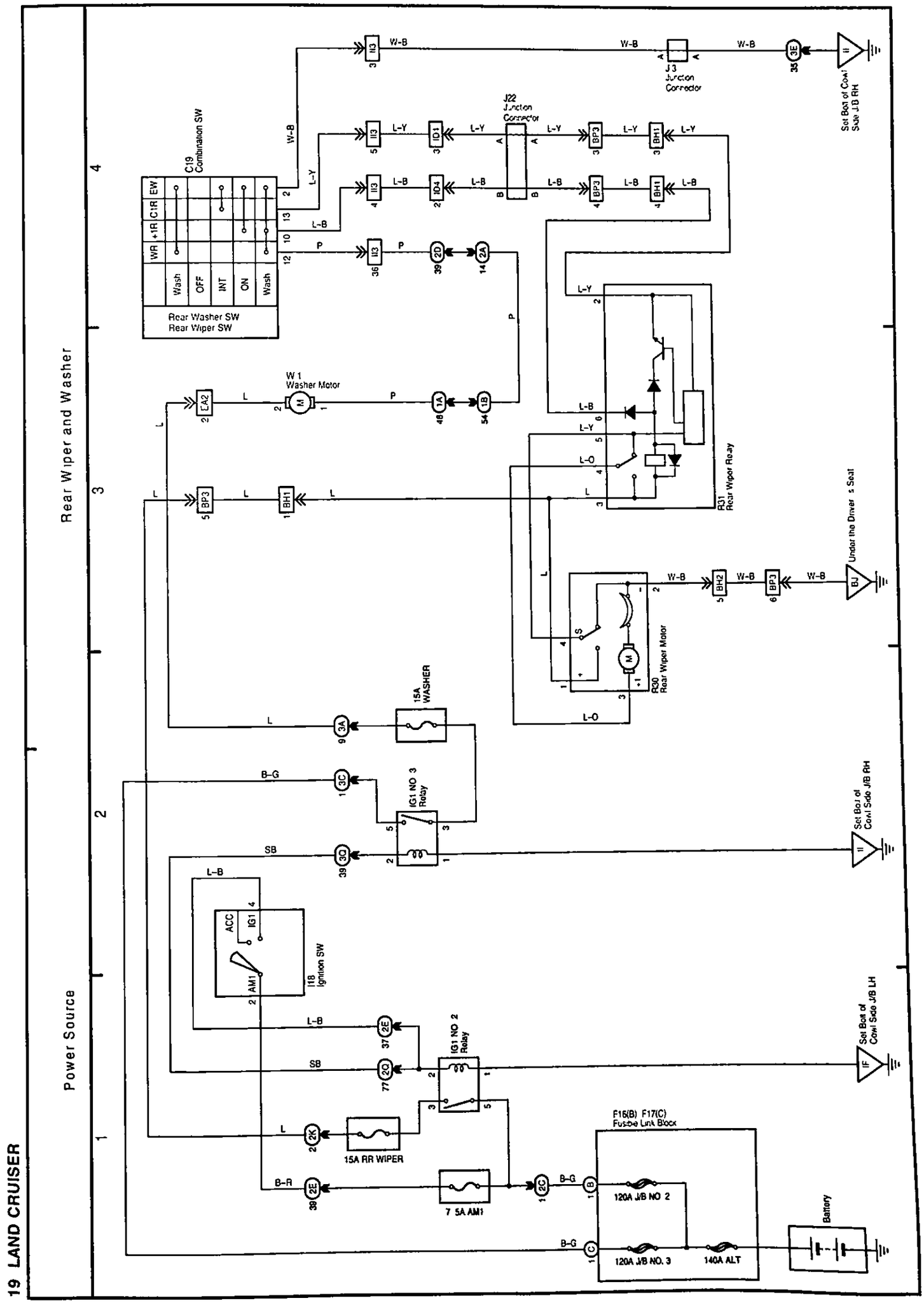
19 LAND CRUISER
Power Source
Rear Wiper and Washer
C19 Combination SW
Rear Washer SW
Rear Wiper SW
W1 Washer Motor
J22 Junction Connector
J3 Junction Connector
R31 Rear Wiper Relay
R30 Rear Wiper Motor
15A WASHER
IG1 NO 3 Relay
IG1 NO 2 Relay
I18 Ignition SW
15A RR WIPER
7 5A AM1
F16(B) F17(C) Fuse-be Link Block
120A J/B NO 2
120A J/B NO. 3
140A ALT
Battery
Under the Driver s Seat
Set Bot of Cowl Side J/B RH
Set Bot of Cowl Side J/B LH

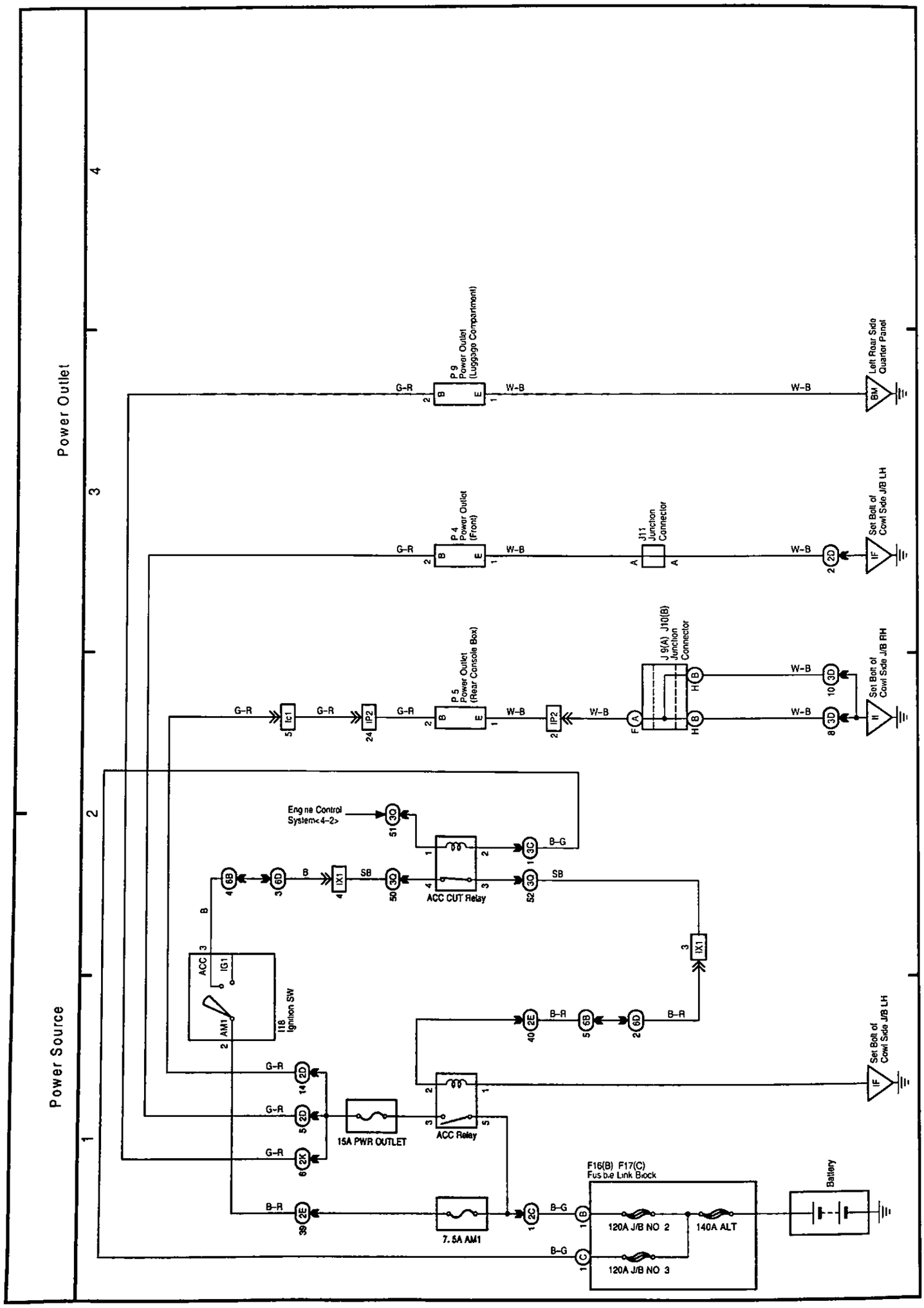
Power Outlet
Power Source
P 9
Power Outlet
(Luggage Compartment)
Left Rear Side
Quarter Panel
P 4
Power Outlet
(Front)
J11
Junction
Connector
Set Bolt of
Cowl Side J/B LH
P 5
Power Outlet
(Rear Console Box)
J 9(A) J10(B)
Junction
Connector
Set Bolt of
Cowl Side J/B RH
Engine Control
System<4-2>
ACC CUT Relay
I16
Ignition SW
ACC Relay
15A PWR OUTLET
7.5A AM1
F16(B) F17(C)
Fusible Link Block
120A J/B NO 2
140A ALT
120A J/B NO 3
Battery

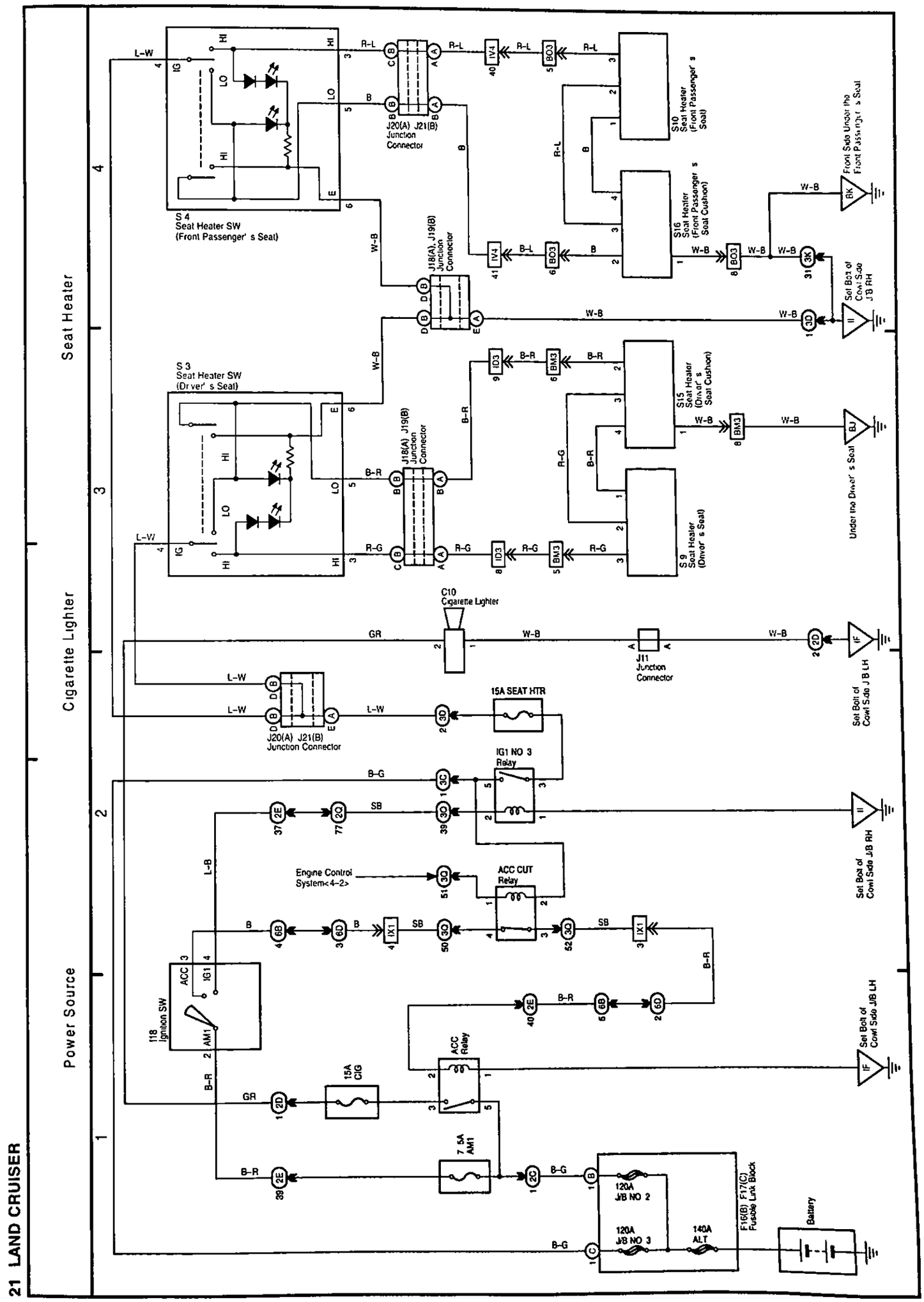
21 LAND CRUISER
Seat Heater
Cigarette Lighter
Power Source
S 4
Seat Heater SW
(Front Passenger' s Seat)
S 3
Seat Heater SW
(Driver' s Seat)
J20(A) J21(B)
Junction
Connector
J18(A), J19(B)
Junction
Connector
S10
Seat Heater
(Front Passenger' s
Seat)
S16
Seat Heater
(Front Passenger' s
Seat Cushion)
S15
Seat Heater
(Driver' s
Seat Cushion)
S9
Seat Heater
(Driver' s Seat)
C10
Cigarette Lighter
J11
Junction
Connector
15A SEAT HTR
IG1 NO 3
Relay
ACC CUT
Relay
ACC
Relay
118
Ignition SW
15A
CIG
7.5A
AM1
120A
J/B NO 2
120A
J/B NO 3
140A
ALT
F16(B) F17(C)
Fusible Link Block
Battery
Engine Control
System<4-2>
Under the Driver' s Seat
Front Side Under the
Front Passenger' s Seat
Set Bolt of
Cowl Side
J/B RH
Set Bolt of
Cowl Side J/B LH

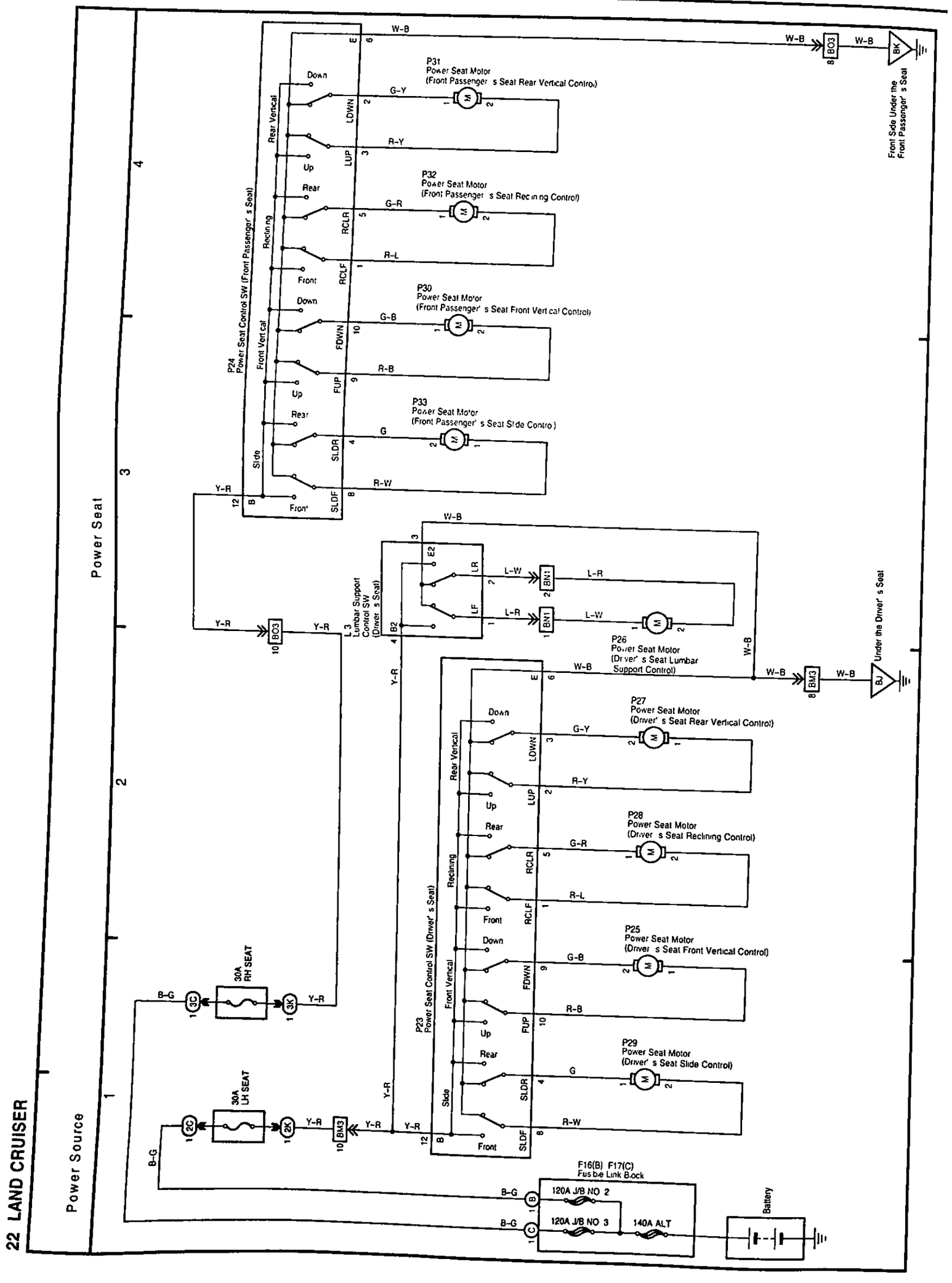
Power Seat
Power Source
P24
Power Seat Control SW (Front Passenger's Seat)
P31
Power Seat Motor
(Front Passenger's Seat Rear Vertical Control)
P32
Power Seat Motor
(Front Passenger's Seat Reclining Control)
P30
Power Seat Motor
(Front Passenger's Seat Front Vertical Control)
P33
Power Seat Motor
(Front Passenger's Seat Slide Control)
Front Side Under the Front Passenger's Seat
L3
Lumbar Support Control SW (Driver's Seat)
P26
Power Seat Motor
(Driver's Seat Lumbar Support Control)
Under the Driver's Seat
P23
Power Seat Control SW (Driver's Seat)
P27
Power Seat Motor
(Driver's Seat Rear Vertical Control)
P28
Power Seat Motor
(Driver's Seat Reclining Control)
P25
Power Seat Motor
(Driver's Seat Front Vertical Control)
P29
Power Seat Motor
(Driver's Seat Slide Control)
30A
RH SEAT
30A
LH SEAT
F16(B) F17(C)
Fusible Link Block
120A J/B NO 2
120A J/B NO 3
140A ALT
Battery
Down
Up
Rear
Front
Rear Vertical
Reclining
Front Vertical
Slide
W-B
G-Y
R-Y
G-R
R-L
G-B
R-B
G
R-W
Y-R
L-W
L-R
B-G

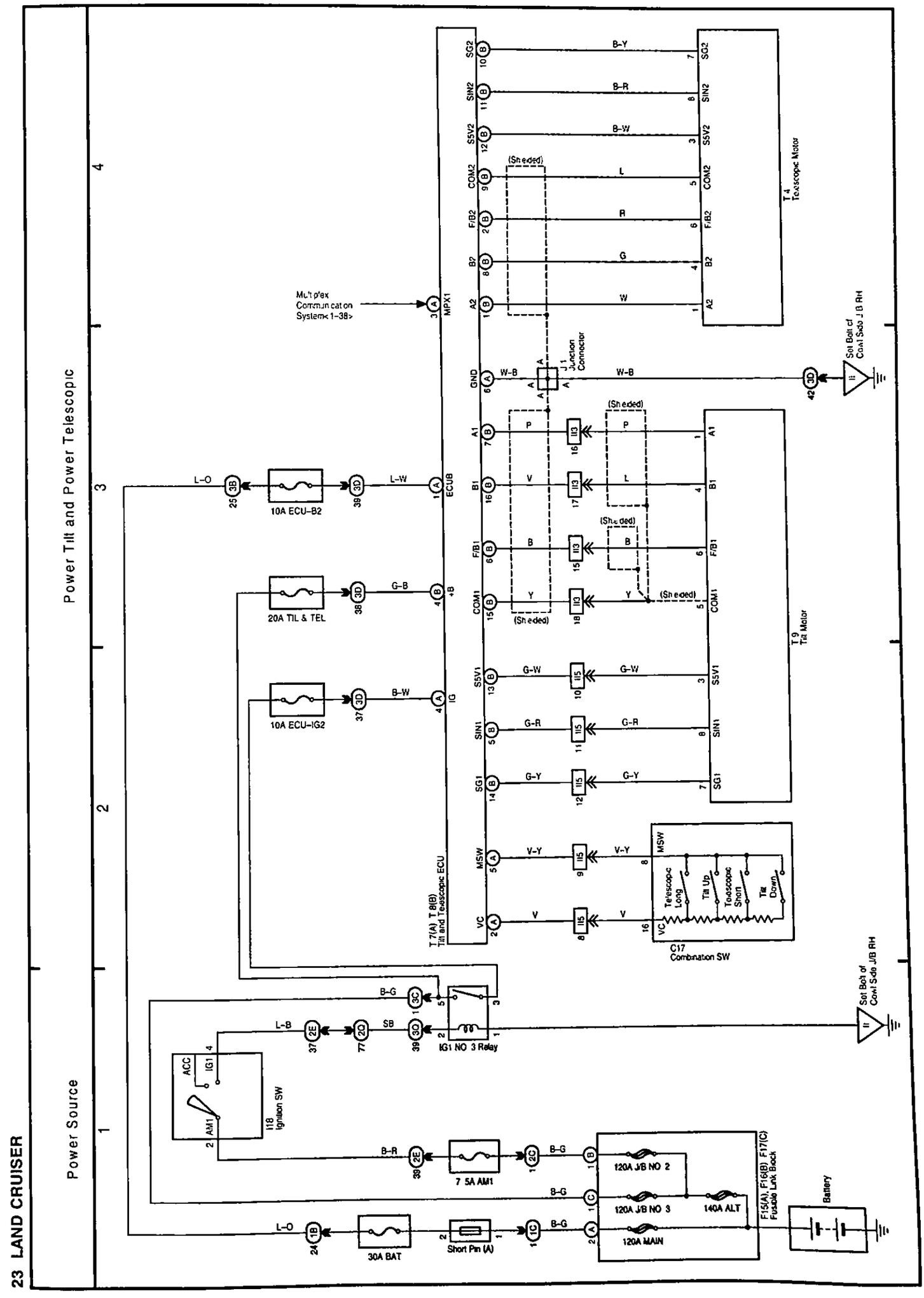
Power Source
Power Tilt and Power Telescopic
1
2
3
4
Multiplex Communication System<1-38>
MPX1
ECUB
+B
IG
10A ECU-B2
20A TIL & TEL
10A ECU-IG2
L-O
L-W
G-B
B-W
T 7(A) T 8(B)
Tilt and Telescopic ECU
J1
Junction Connector
W-B
Set Bolt of Cowl Side J/B RH
T 4
Telescope Motor
B-Y
B-R
B-W
L
R
G
W
(Shielded)
T 9
Tilt Motor
P
V
B
Y
G-W
G-R
G-Y
V-Y
C17
Combination SW
Telescopic Long
Tilt Up
Telescopic Short
Tilt Down
MSW
VC
B-G
L-B
SB
IG1 NO 3 Relay
I18
Ignition SW
ACC
IG1
AM1
7.5A AM1
120A J/B NO 2
120A J/B NO 3
140A ALT
120A MAIN
F15(A), F16(B), F17(C)
Fusible Link Block
Battery
30A BAT
Short Pin (A)

M OVERALL ELECTRICAL WIRING DIAGRAM

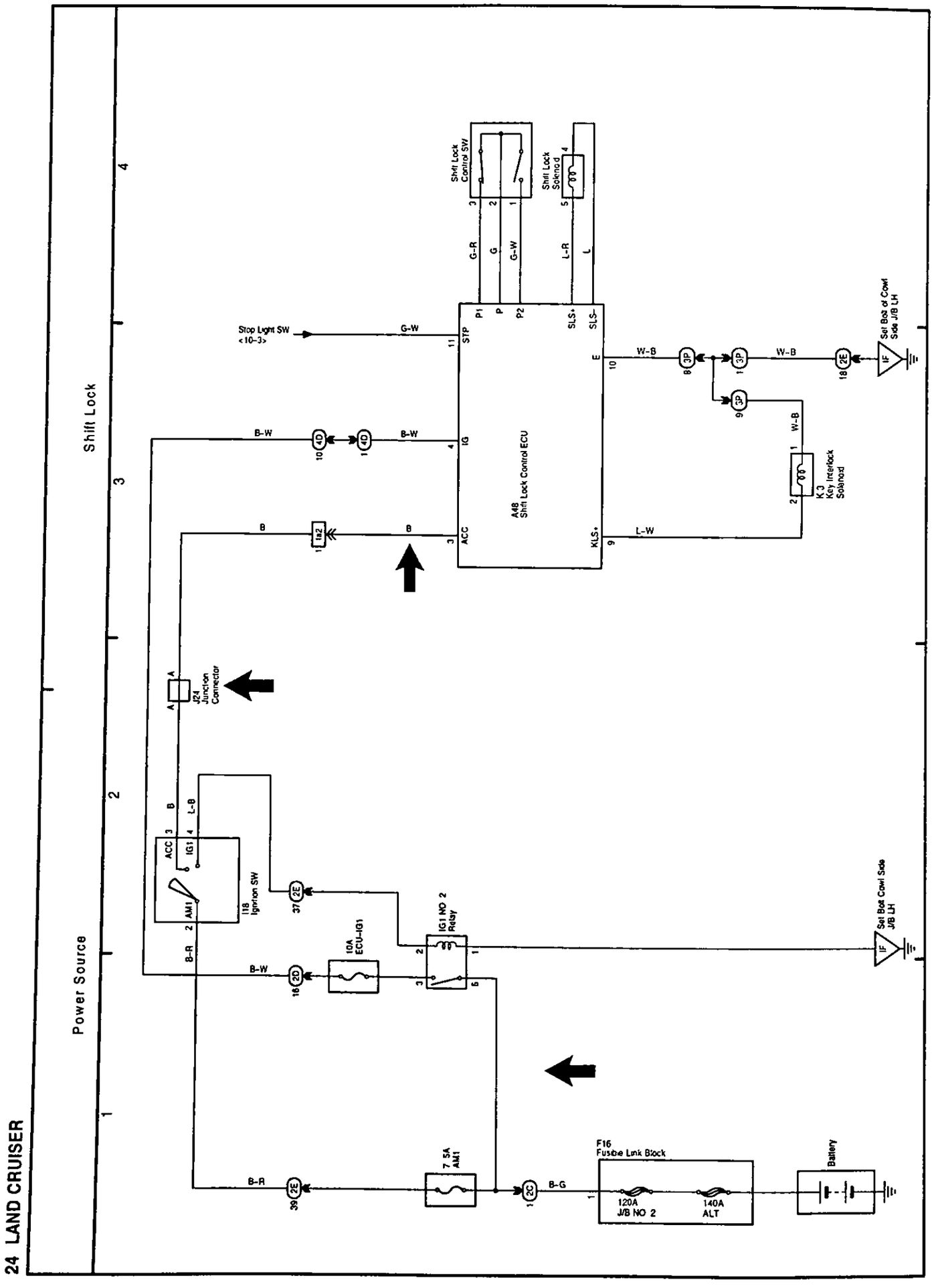

Correction to Pub.No. EWD510U(Bulletin No. OB-2195)

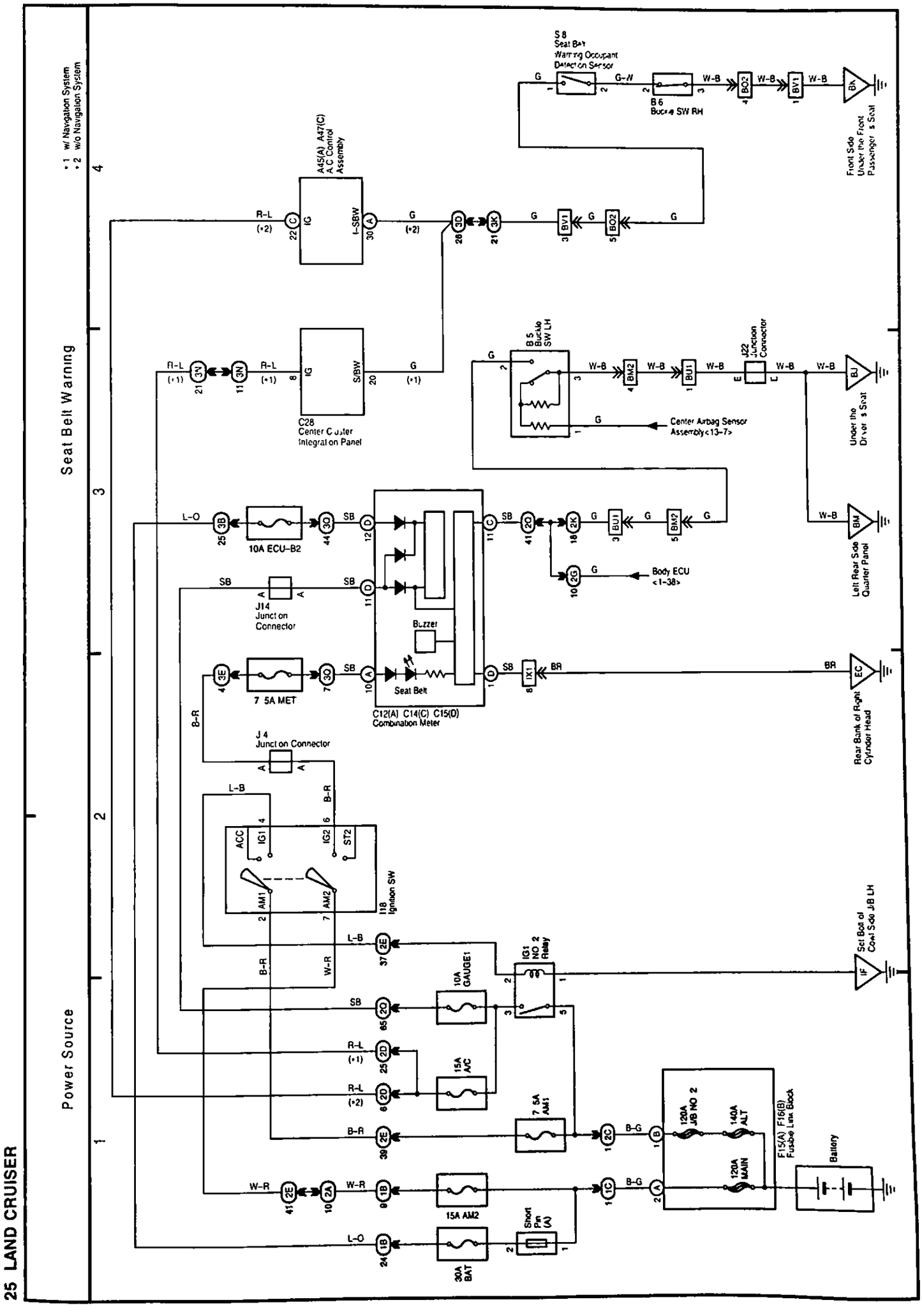
25 LAND CRUISER
Power Source
Seat Belt Warning
• 1 w/ Navigation System
• 2 w/o Navigation System
S8 Seat Belt Warning Occupant Detection Sensor
B6 Buckle SW RH
Front Side Under the Front Passenger's Seat
A45(A) A47(C) A/C Control Assembly
C28 Center Cluster Integration Panel
B5 Buckle SW LH
J22 Junction Connector
Center Airbag Sensor Assembly <13-7>
Under the Driver's Seat
10A ECU-B2
Body ECU <1-38>
Left Rear Side Quarter Panel
J14 Junction Connector
Buzzer
7.5A MET
Seat Belt
C12(A) C14(C) C15(D) Combination Meter
Rear Bank of Right Cylinder Head
J4 Junction Connector
ACC
IG1
IG2
ST2
AM1
AM2
11B Ignition SW
IG1 NO.2 Relay
10A GAUGE1
15A A/C
7.5A AM1
15A AM2
30A BAT
Short Pin (A)
Set Bolt of Cowl Side J/B LH
120A J/B NO.2
140A ALT
120A MAIN
F15(A) F16(B) Fusible Link Block
Battery

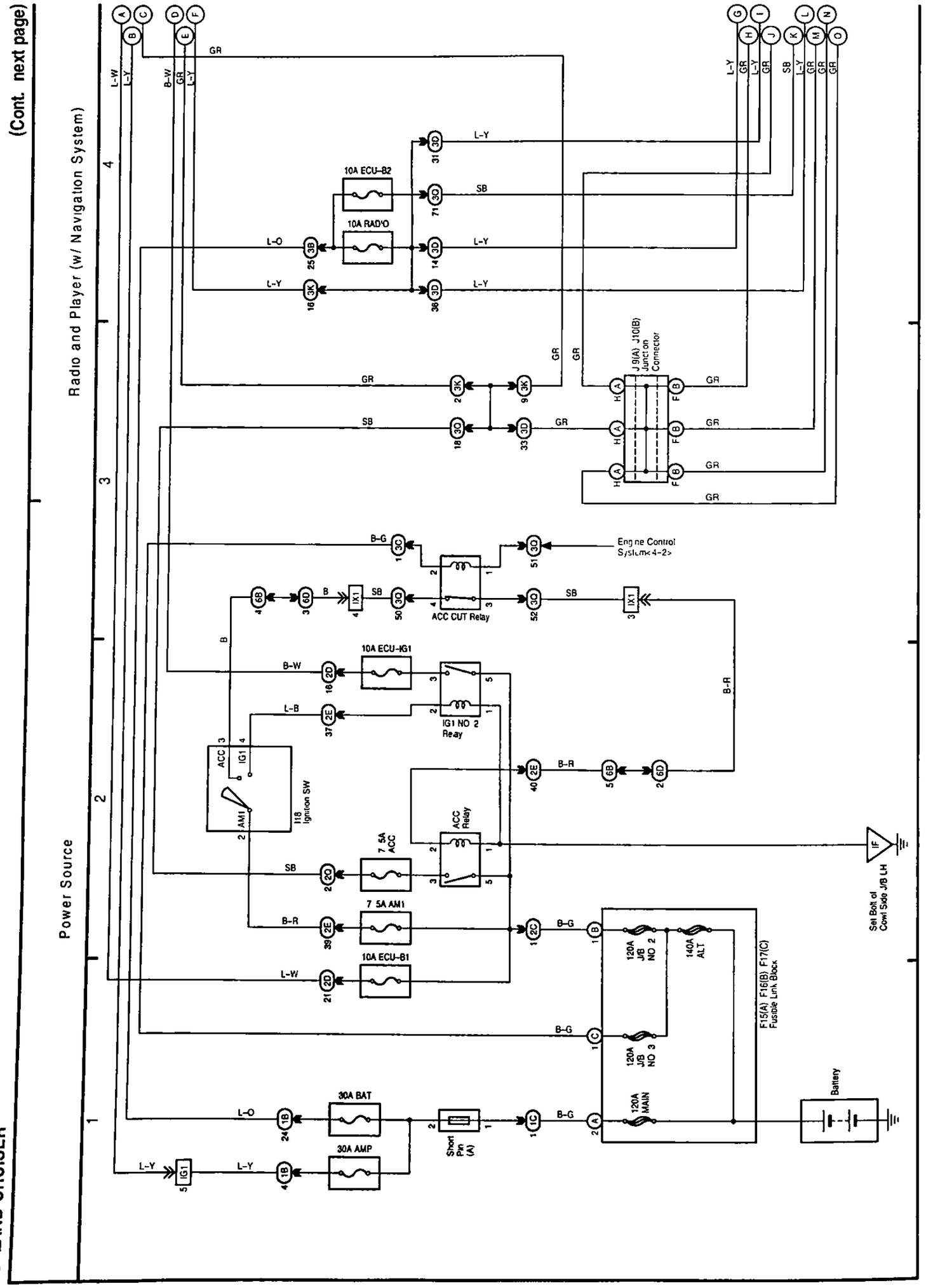
(Cont. next page)
Radio and Player (w/ Navigation System)
Power Source
10A ECU-B2
10A RAD'O
J 9(A) J10(B) Junction Connector
Engine Control System<4-2>
ACC CUT Relay
10A ECU-IG1
IG1 NO 2 Relay
ACC Relay
7.5A ACC
7.5A AM1
10A ECU-B1
118 Ignition SW
30A BAT
30A AMP
Short Pin (A)
120A J/B NO 2
120A J/B NO 3
140A ALT
120A MAIN
F15(A) F16(B) F17(C) Fusible Link Block
Battery
Set Bolt of Cowl Side J/B LH

(Cont. next page)

Radio and Player (w/ Navigation System)

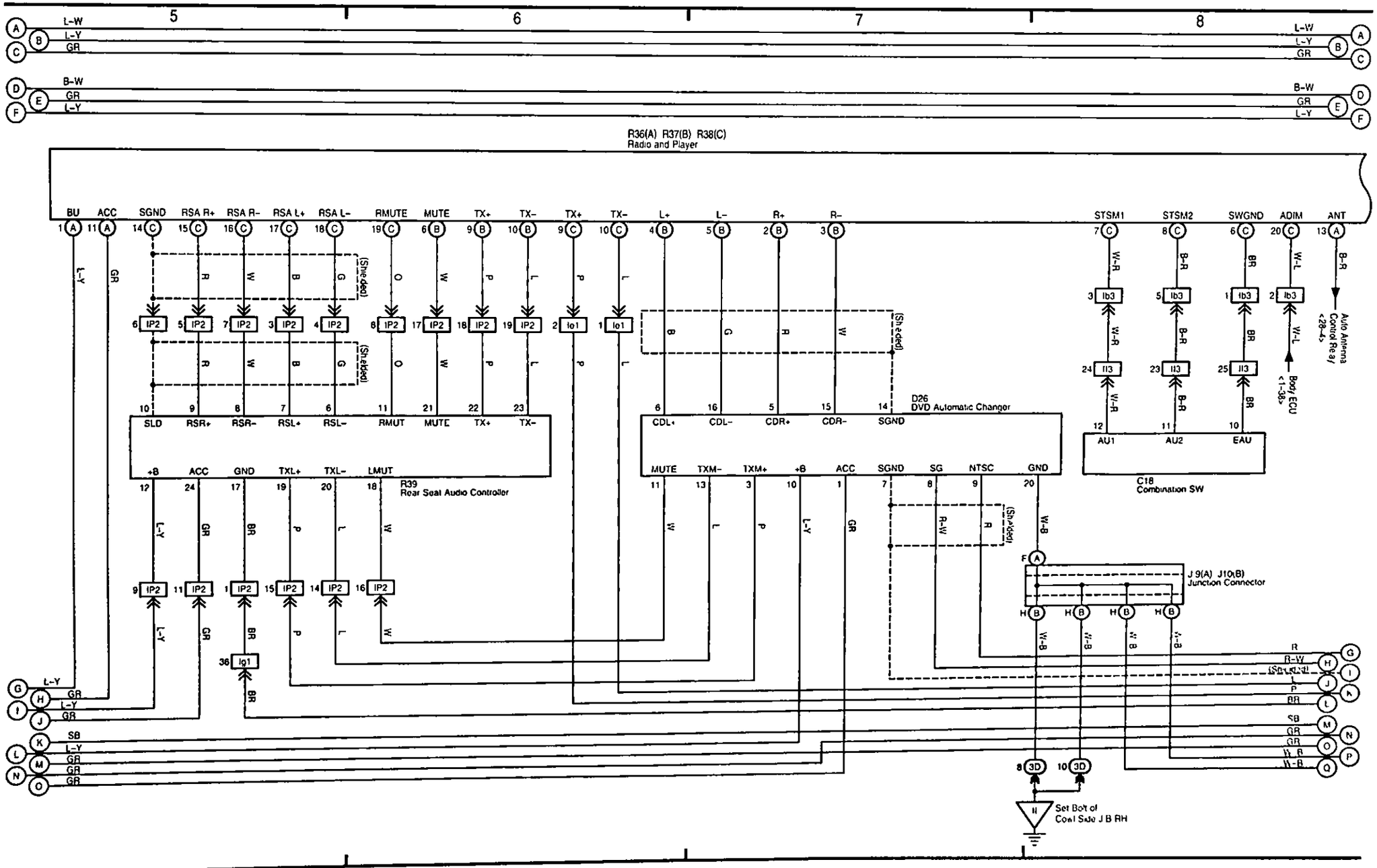

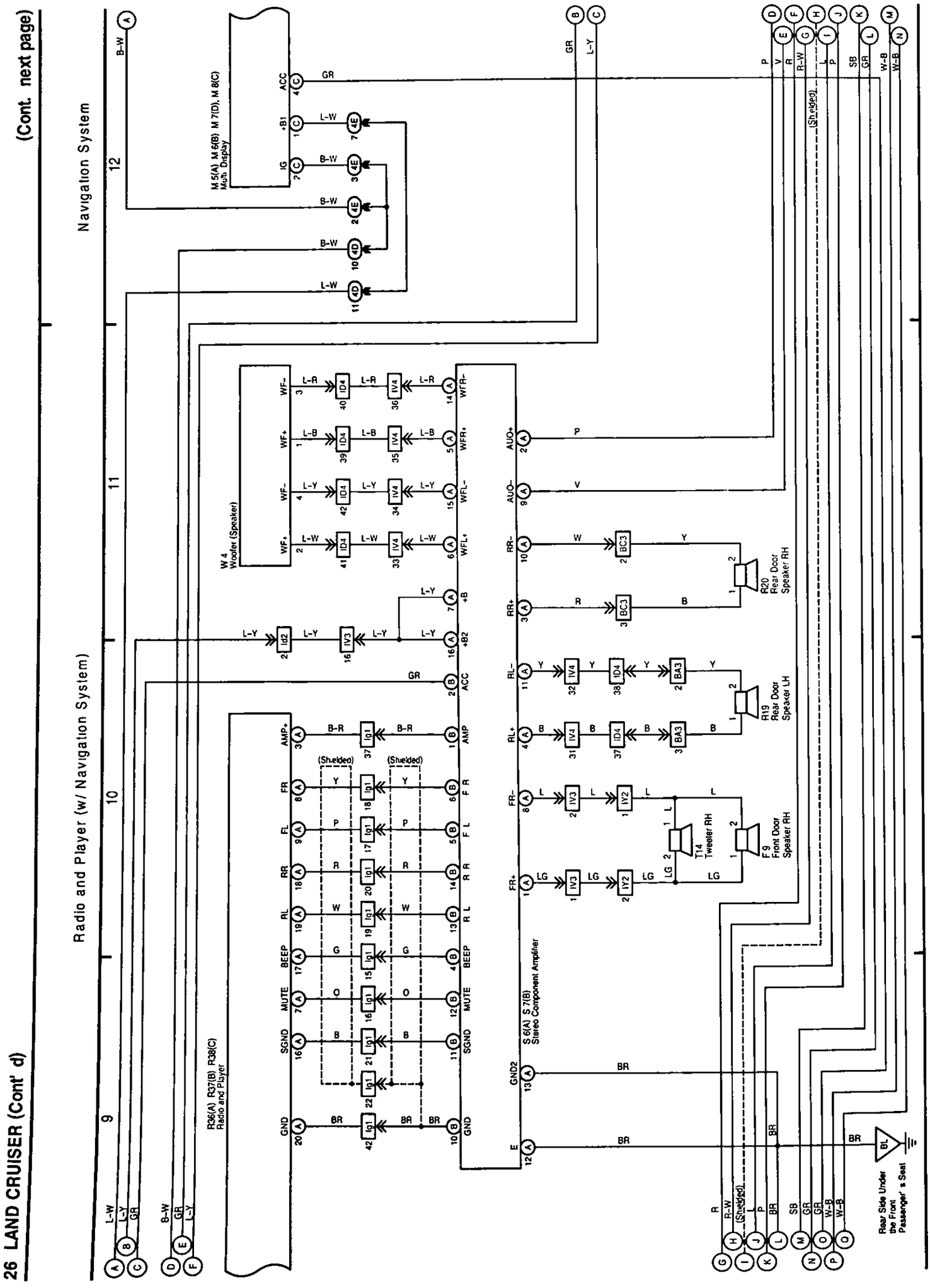
(Cont. next page)
Navigation System
Radio and Player (w/ Navigation System)
M 5(A) M 6(B) M 7(D), M 8(C)
Multi-Display
W 4
Woofer (Speaker)
R36(A) R37(B) R38(C)
Radio and Player
S 6(A) S 7(B)
Stereo Component Amplifier
R19
Rear Door
Speaker LH
R20
Rear Door
Speaker RH
F9
Front Door
Speaker RH
T14
Tweeter RH
(Shielded)
Rear Side Under the Front Passenger's Seat

(Cont. next page)

Navigation System

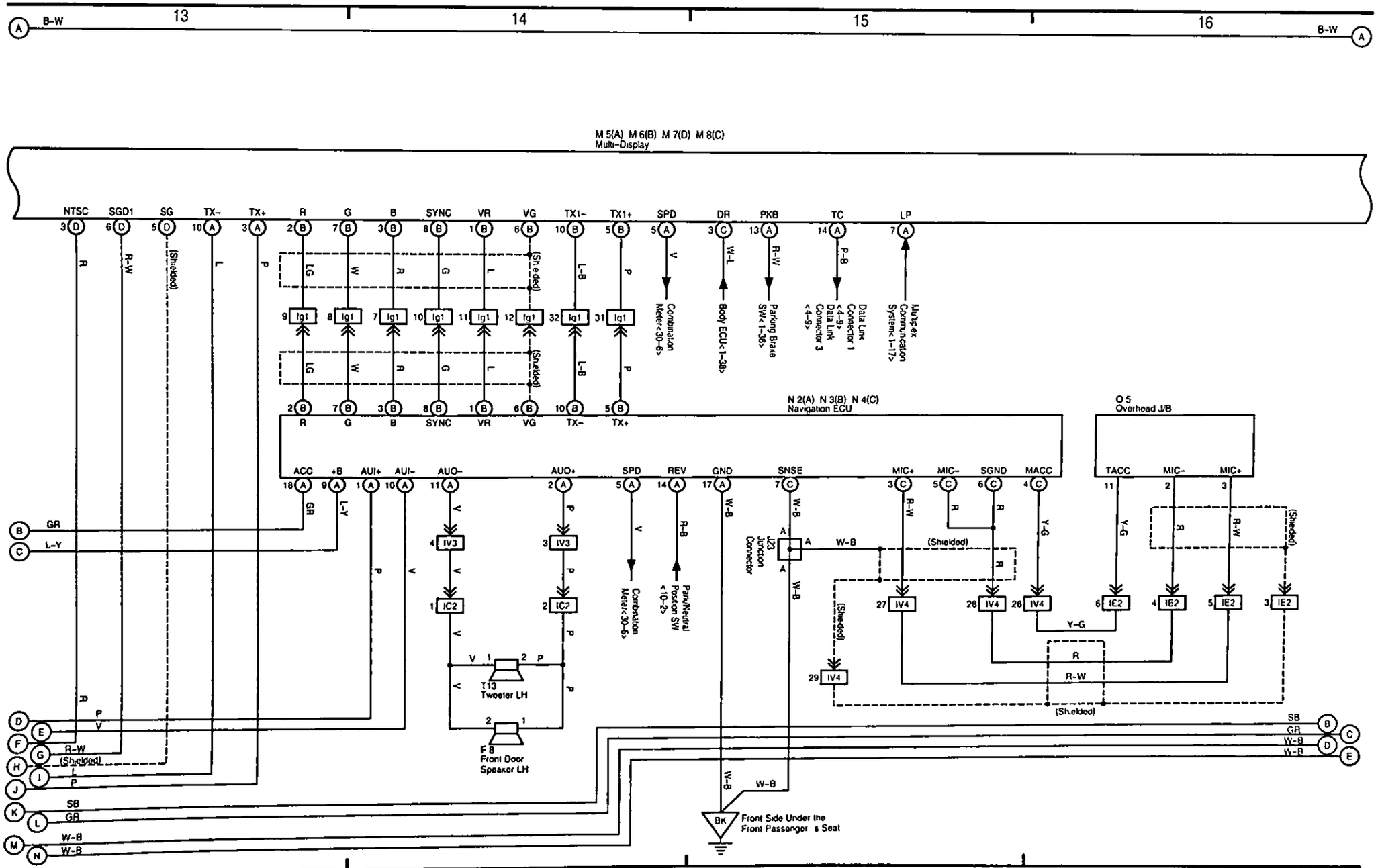

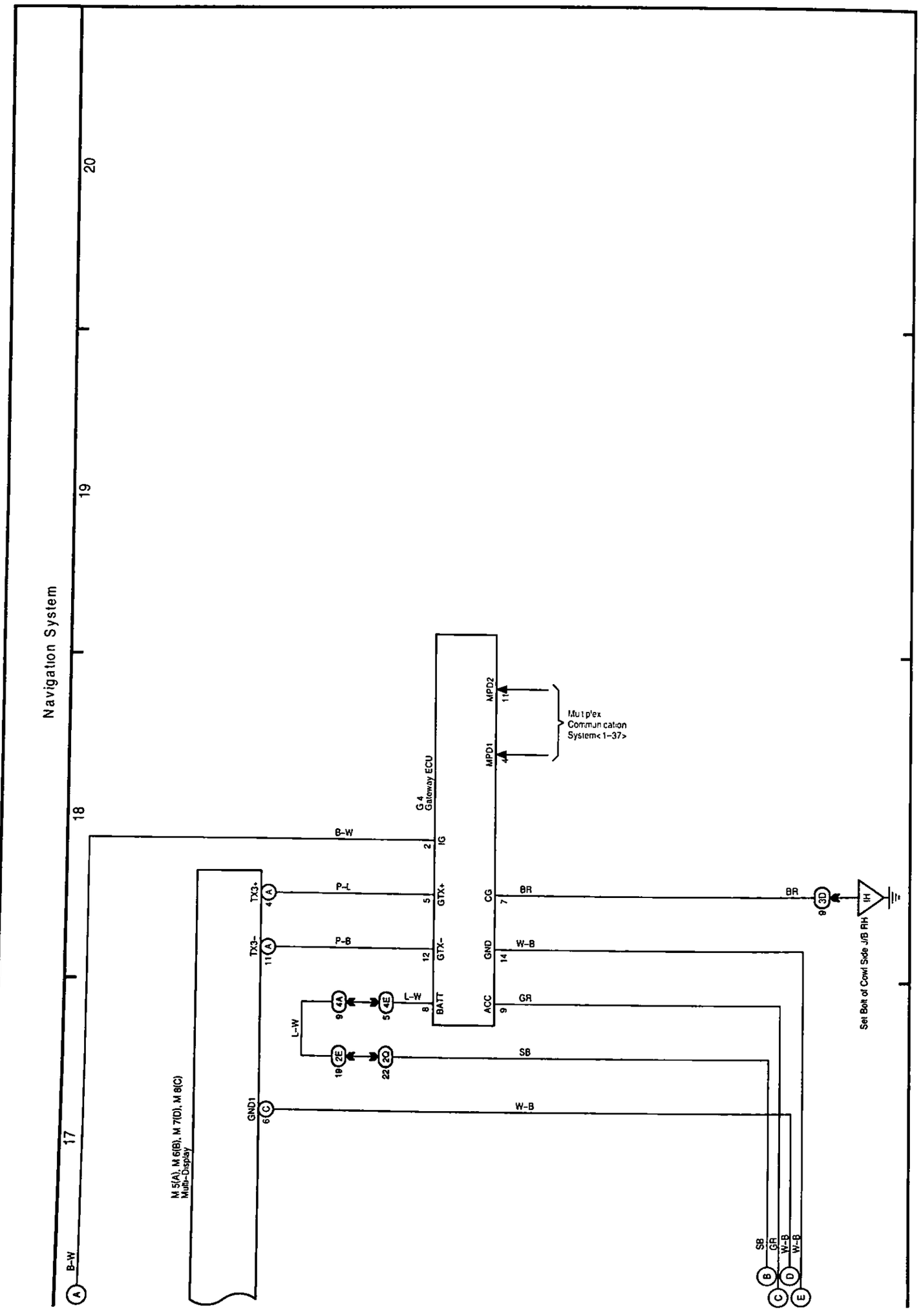
Navigation System
17
18
19
20
B-W
M 5(A), M 6(B), M 7(D), M 8(C)
Multi-Display
GND1
6
C
TX3+
4
A
TX3-
11
A
P-L
P-B
G 4
Gateway ECU
IG
2
GTX+
5
GTX-
12
BATT
8
L-W
4A
9
4E
5
2E
19
2D
22
MPD2
11
MPD1
4
Multiplex
Communication
System< 1-37>
CG
7
GND
14
ACC
9
BR
GR
W-B
SB
3D
9
1H
Set Bolt of Cowl Side J/B RH
B
C
D
E

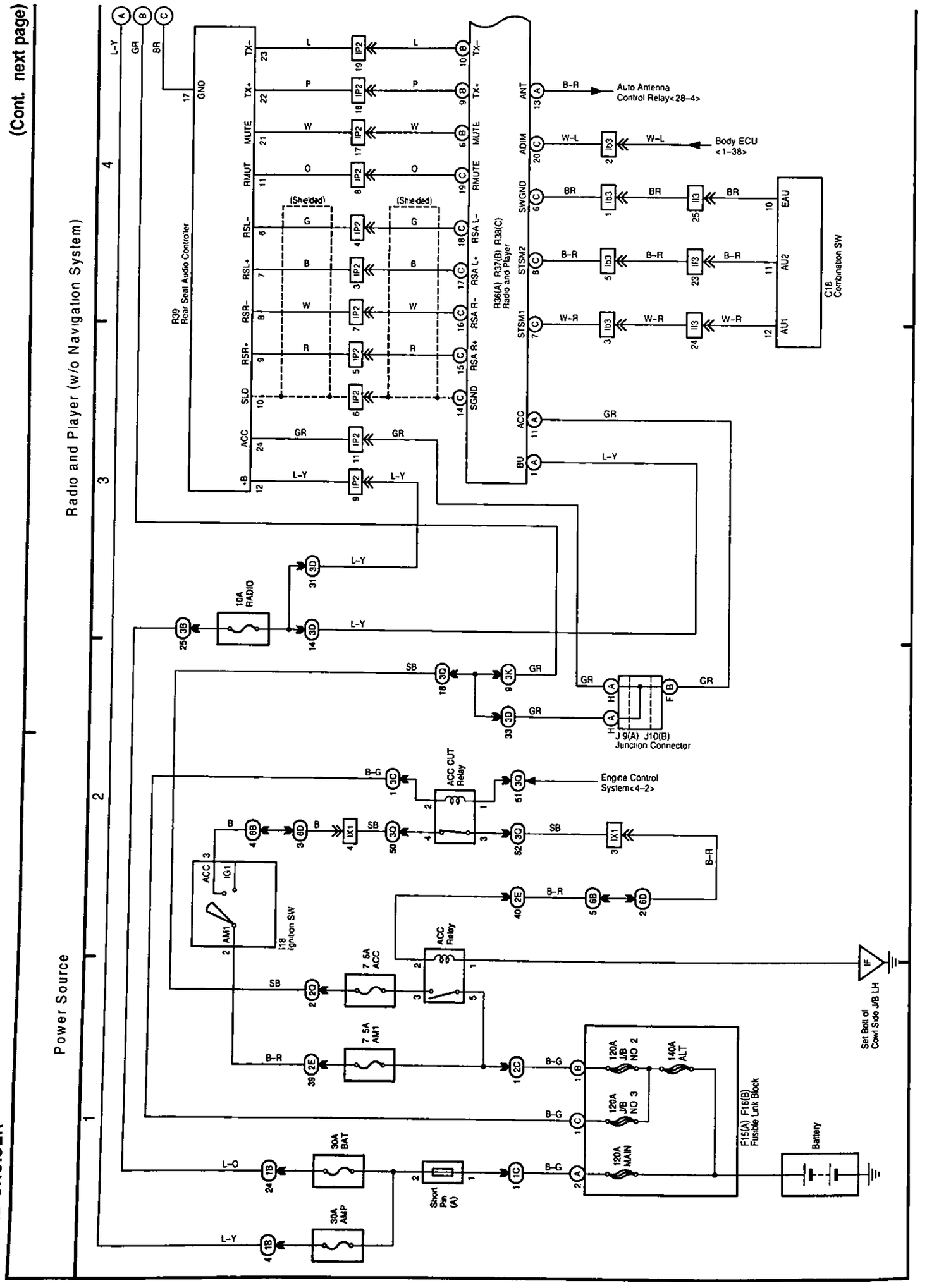
(Cont. next page)
Radio and Player (w/o Navigation System)
Power Source
R39 Rear Seat Audio Controller
R36(A) R37(B) R38(C) Radio and Player
Auto Antenna Control Relay<28-4>
Body ECU <1-38>
C18 Combination SW
J 9(A) J10(B) Junction Connector
Engine Control System<4-2>
ACC CUT Relay
ACC Relay
I18 Ignition SW
10A RADIO
7.5A ACC
7.5A AM1
30A BAT
30A AMP
Short Pin (A)
120A J/B NO 2
120A J/B NO 3
140A ALT
120A MAIN
F15(A) F16(B) Fusible Link Block
Battery
Set Bolt of Cowl Side J/B LH
(Shielded)
27 LAND CRUISER

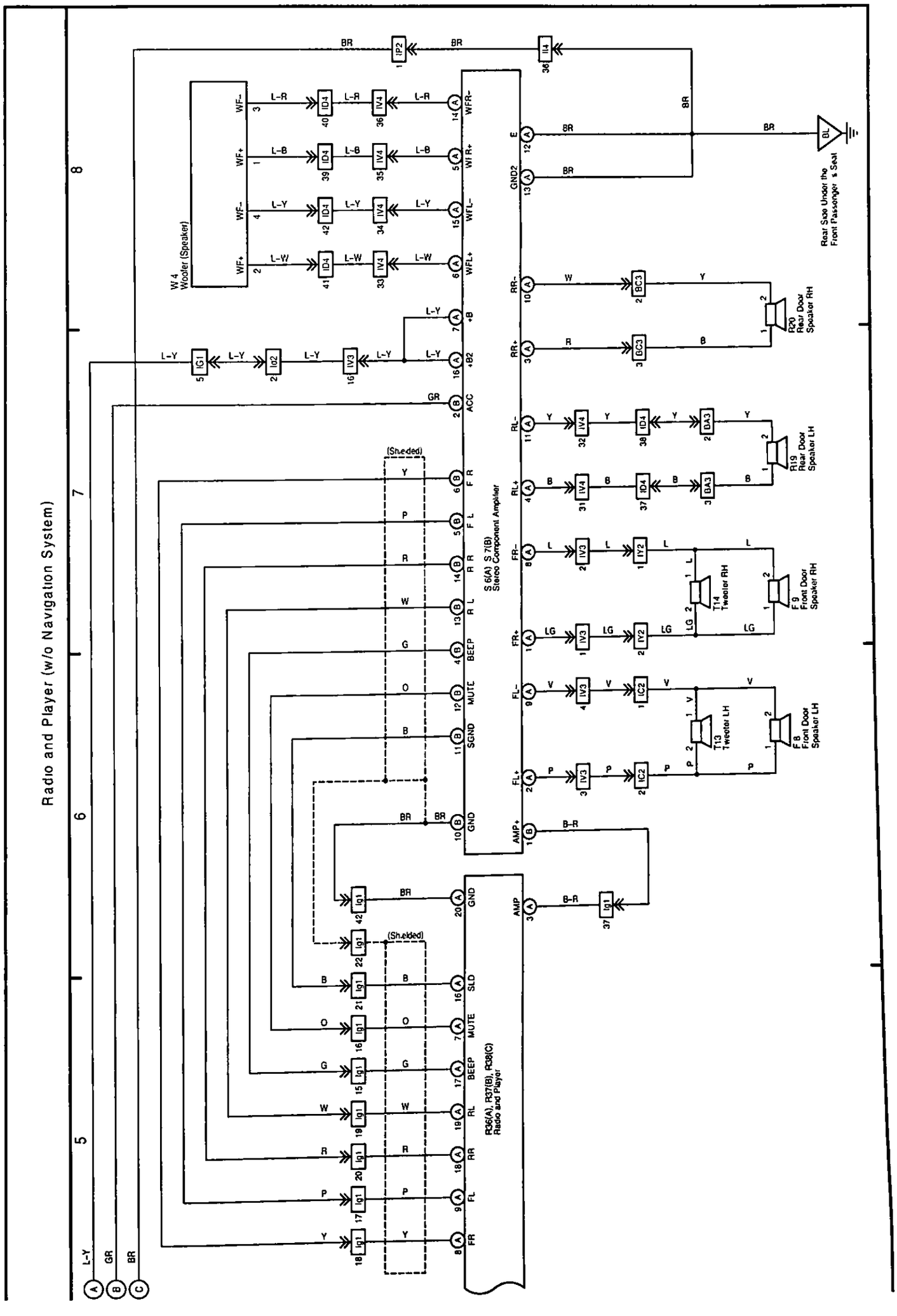
Radio and Player (w/o Navigation System)
W 4
Woofer (Speaker)
S 6(A), S 7(B)
Stereo Component Amplifier
R36(A), R37(B), R38(C)
Radio and Player
Rear Side Under the
Front Passenger's Seat
R20
Rear Door
Speaker RH
R19
Rear Door
Speaker LH
T14
Tweeter RH
F9
Front Door
Speaker RH
T13
Tweeter LH
F8
Front Door
Speaker LH
(Shielded)
(Shielded)

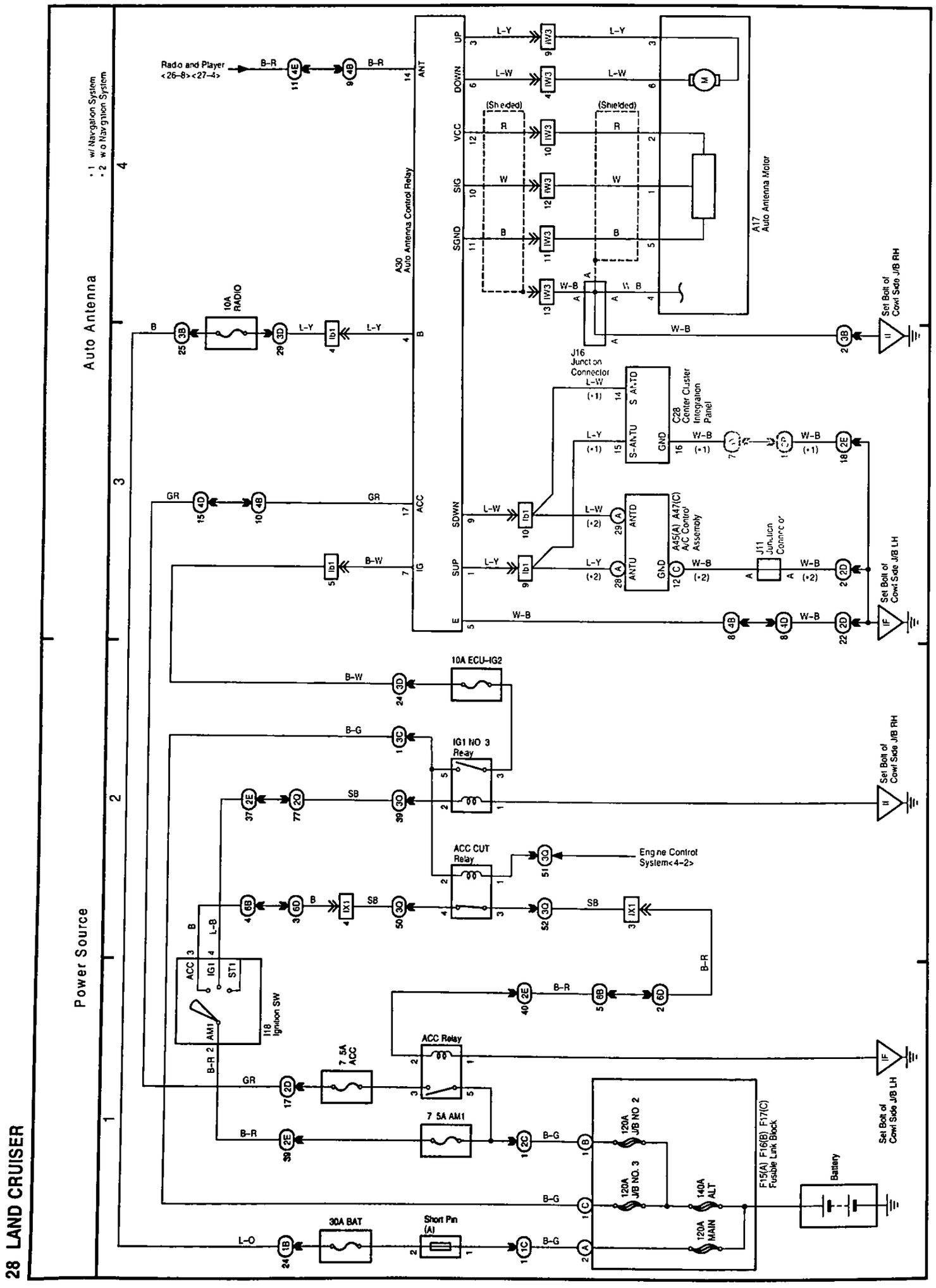
Auto Antenna
Power Source
• 1 w/ Navigation System
• 2 w/o Navigation System
Radio and Player <26-8><27-4>
A30 Auto Antenna Control Relay
A17 Auto Antenna Motor
J16 Junction Connector
C28 Center Cluster Integration Panel
A45(A) A47(C) A/C Control Assembly
J11 Junction Connector
10A RADIO
10A ECU-IG2
IG1 NO 3 Relay
ACC CUT Relay
ACC Relay
I18 Ignition SW
7.5A ACC
7.5A AM1
30A BAT
Short Pin (A)
120A J/B NO 2
120A J/B NO. 3
140A ALT
120A MAIN
F15(A) F16(B) F17(C) Fusible Link Block
Battery
Engine Control System<4-2>
Set Bolt of Cowl Side J/B RH
Set Bolt of Cowl Side J/B LH

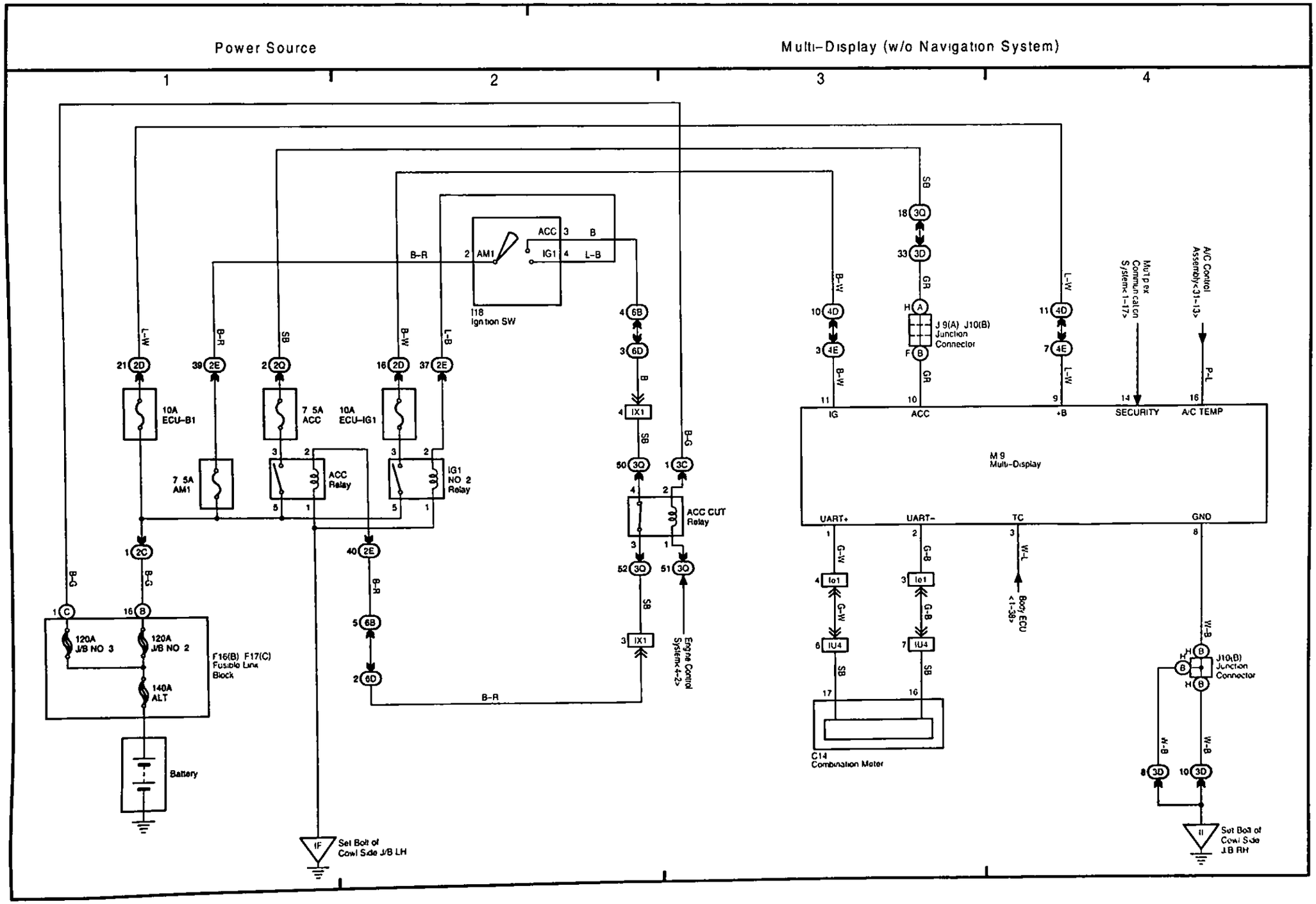
Power Source
Multi-Display (w/o Navigation System)
1
2
3
4
10A ECU-B1
7.5A AM1
7.5A ACC
10A ECU-IG1
ACC Relay
IG1 NO.2 Relay
ACC CUT Relay
ACC 3 B
AM1 2 IG1 4 L-B
I18 Ignition SW
F16(B) F17(C) Fusible Link Block
120A J/B NO.3
120A J/B NO.2
140A ALT
Battery
IF Set Bolt of Cowl Side J/B LH
J9(A) J10(B) Junction Connector
M9 Multi-Display
IG
ACC
+B
SECURITY
A/C TEMP
UART+
UART-
TC
GND
C14 Combination Meter
Body ECU <1-38>
Multiplex Communication System<1-17>
A/C Control Assembly<31-13>
Engine Control System<4-2>
J10(B) Junction Connector
II Set Bolt of Cowl Side J/B RH

M

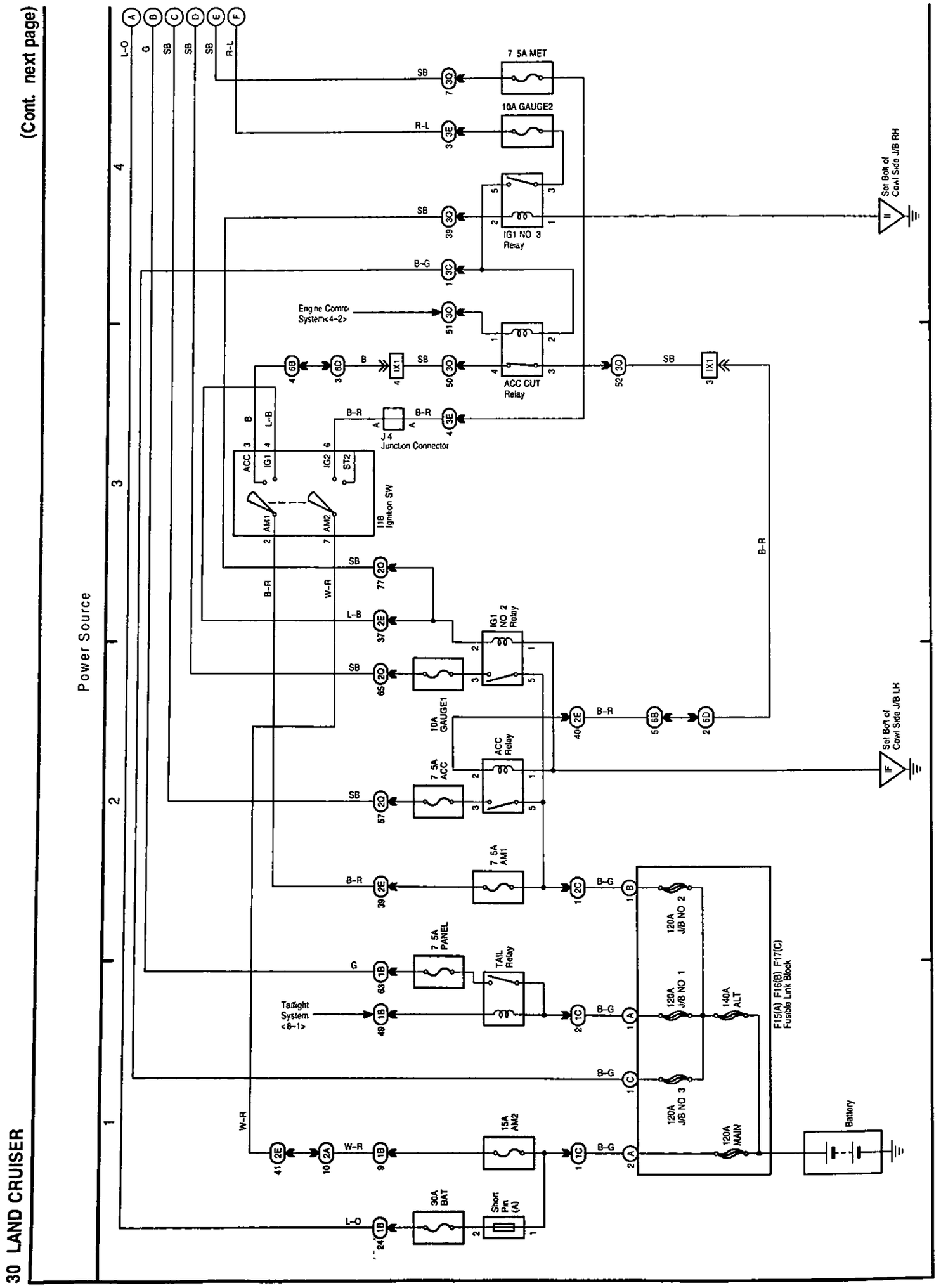
(Cont. next page)
Power Source
7.5A MET
10A GAUGE2
IG1 NO. 3 Relay
ACC CUT Relay
Engine Control System<4-2>
Taillight System <8-1>
J4 Junction Connector
11B Ignition SW
IG1 NO. 2 Relay
ACC Relay
10A GAUGE1
7.5A ACC
7.5A AM1
7.5A PANEL
TAIL Relay
15A AM2
30A BAT
Short Pin (A)
120A J/B NO. 2
120A J/B NO. 1
120A J/B NO. 3
140A ALT
120A MAIN
F15(A) F16(B) F17(C) Fusible Link Block
Battery
Set Bolt of Cowl Side J/B RH
Set Bolt of Cowl Side J/B LH
30 LAND CRUISER

(Cont. next page)

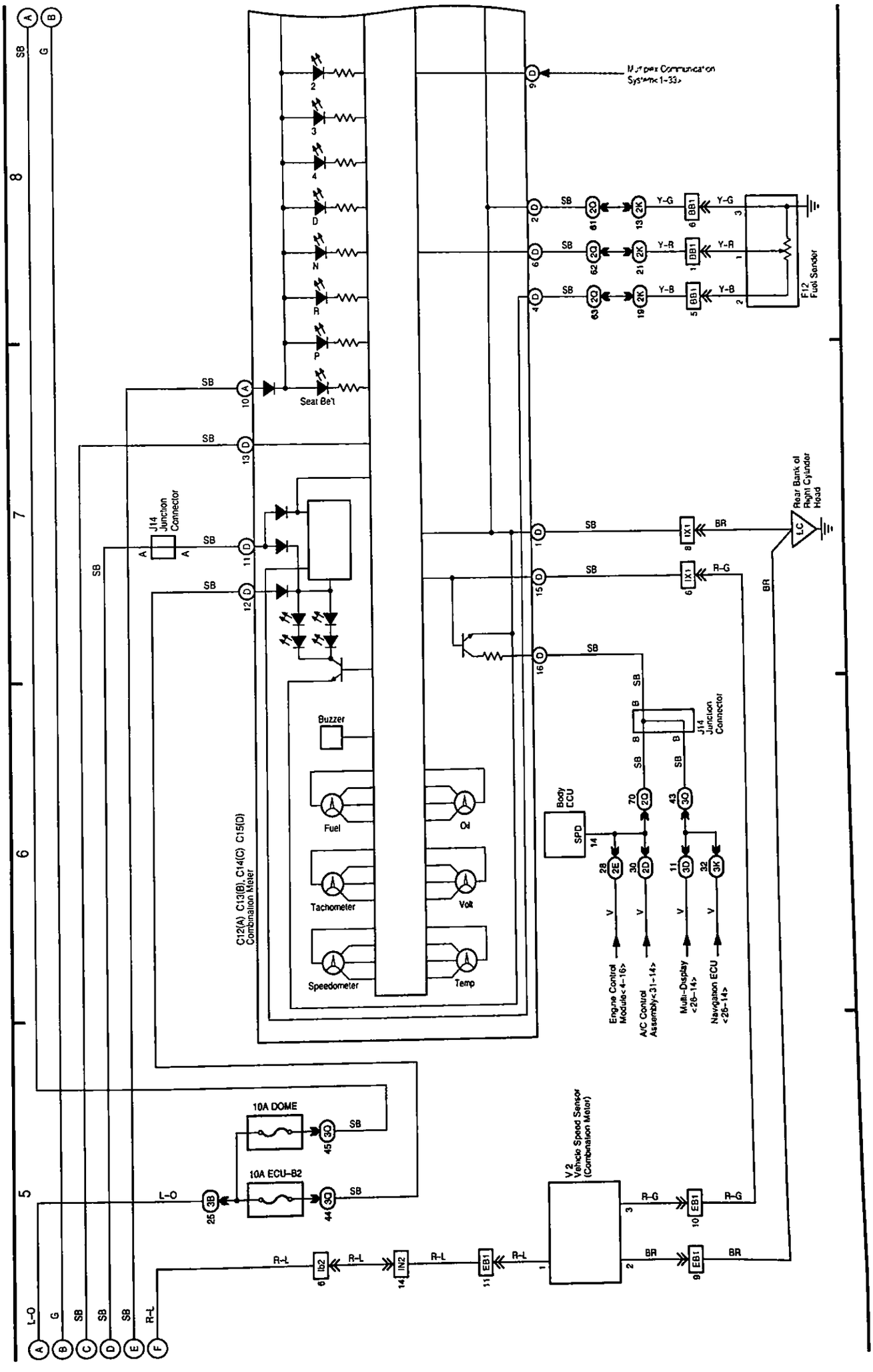

(Cont. next page)

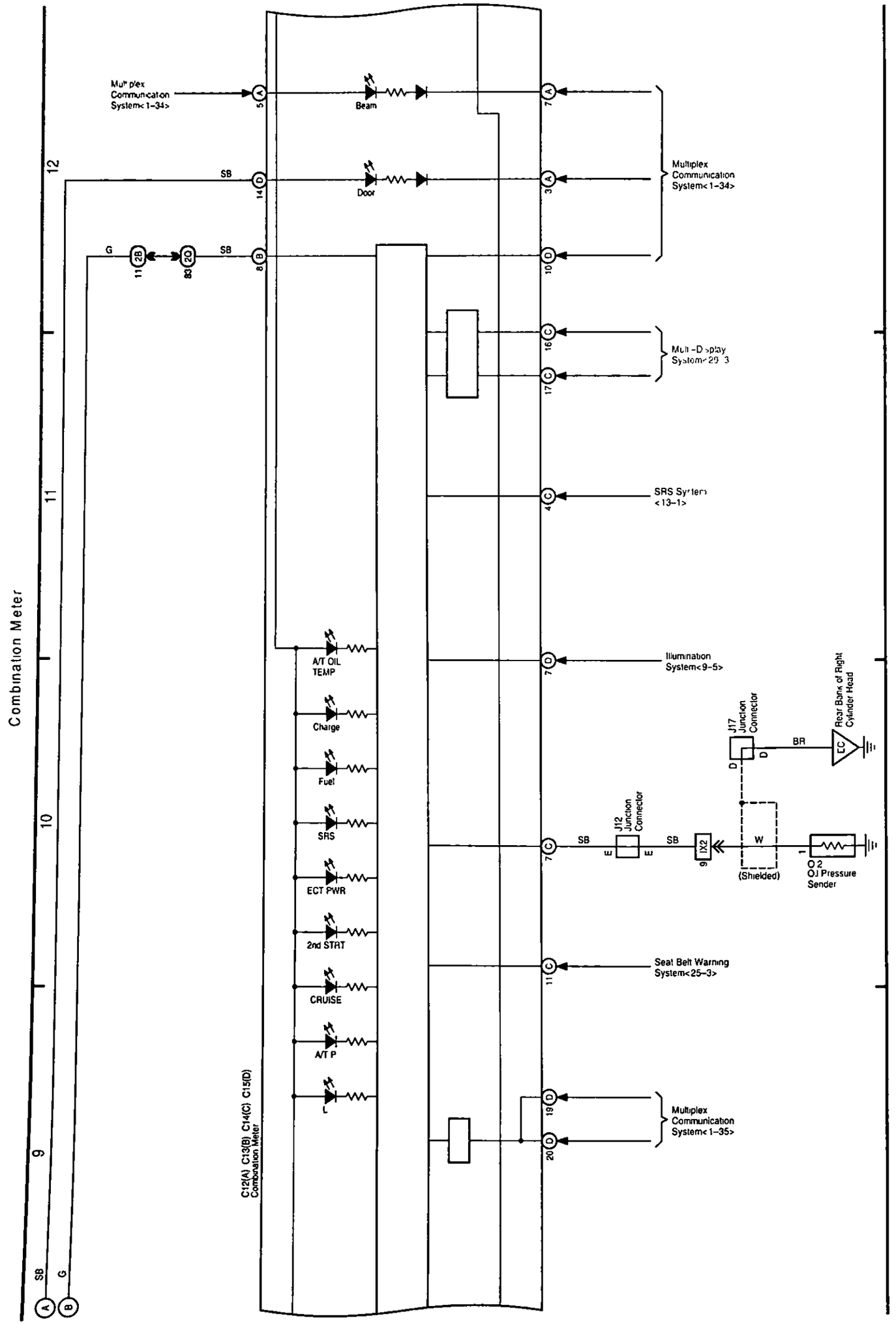

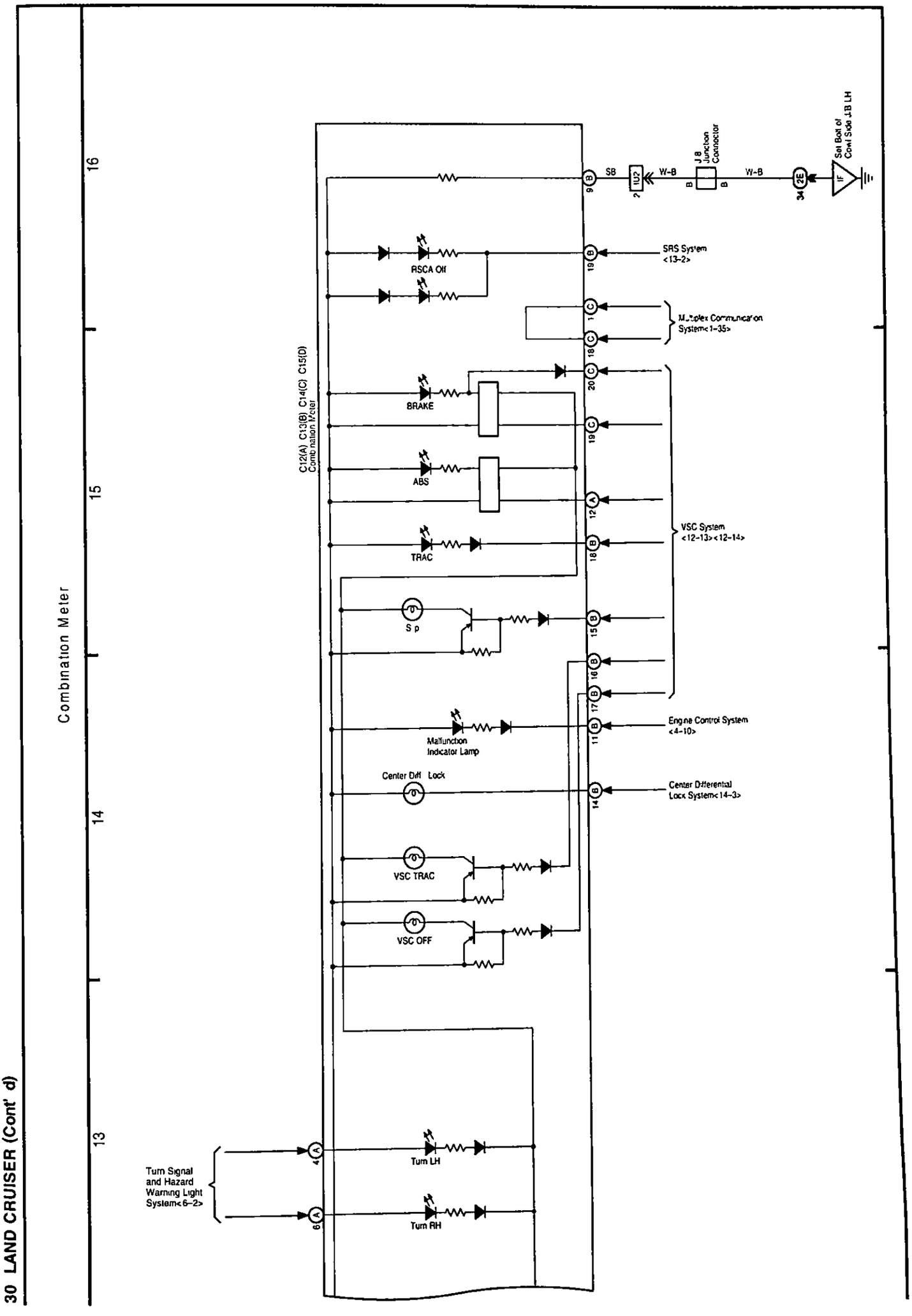
30 LAND CRUISER (Cont' d)
Combination Meter
16
15
14
13
C12(A) C13(B) C14(C) C15(D)
Combination Meter
SB
W-B
J/B Junction Connector
W-B
Set Bolt of Cowl Side J/B LH
SRS System <13-2>
RSCA Off
Multiplex Communication System<1-35>
BRAKE
ABS
TRAC
VSC System <12-13><12-14>
Sp
Malfunction Indicator Lamp
Engine Control System <4-10>
Center Diff Lock
Center Differential Lock System<14-3>
VSC TRAC
VSC OFF
Turn Signal and Hazard Warning Light System<6-2>
Turn LH
Turn RH

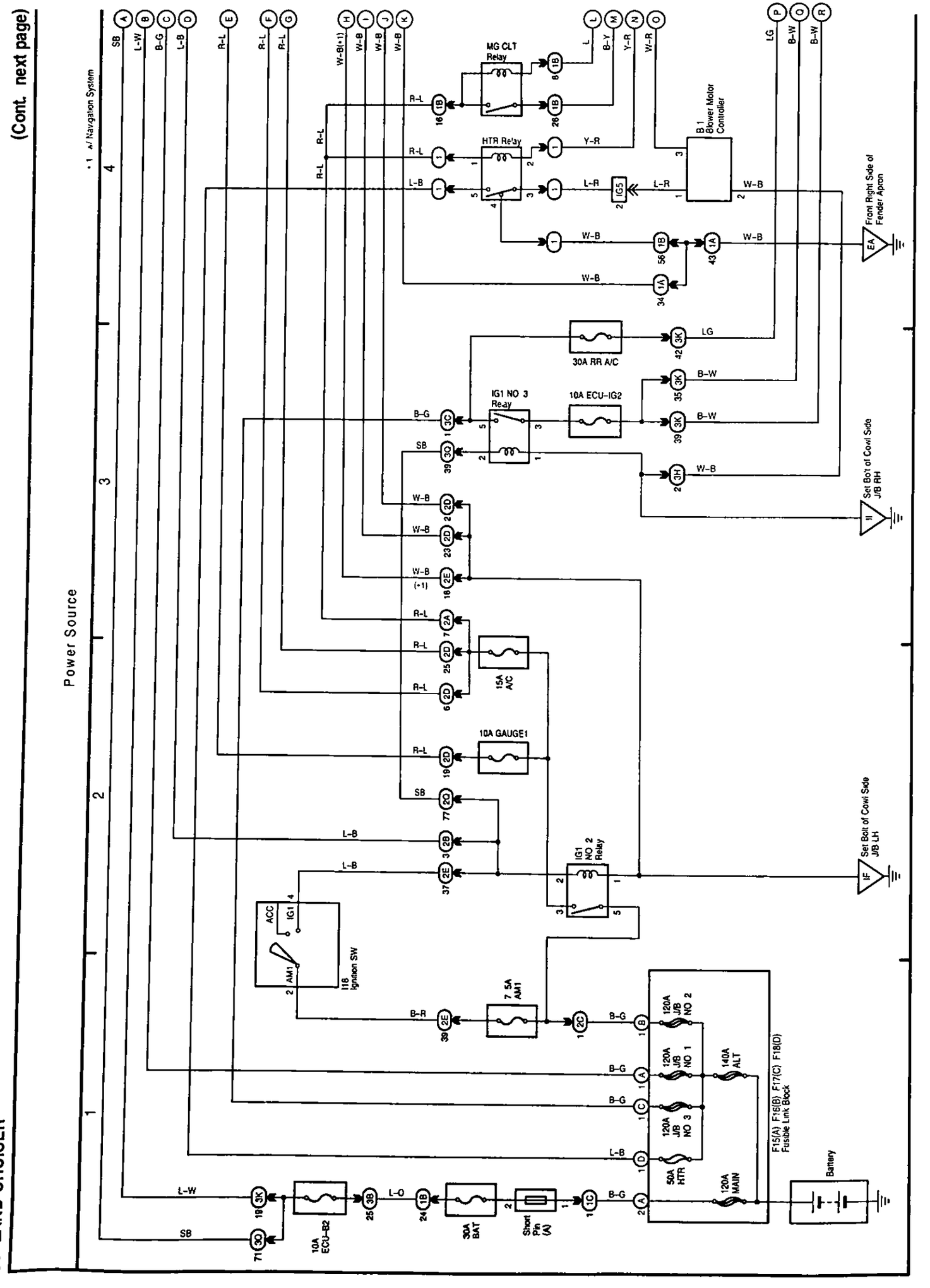
(Cont. next page)
*1 w/ Navigation System
Power Source
MG CLT Relay
HTR Relay
B1 Blower Motor Controller
IG1 NO 3 Relay
IG1 NO 2 Relay
30A RR A/C
10A ECU-IG2
15A A/C
10A GAUGE1
7.5A AM1
118 Ignition SW
120A J/B NO 2
120A J/B NO 1
120A J/B NO 3
140A ALT
50A HTR
120A MAIN
F15(A) F16(B) F17(C) F18(D) Fusible Link Block
Battery
10A ECU-B2
30A BAT
Short Pin (A)
Front Right Side of Fender Apron
Set Bolt of Cowl Side J/B RH
Set Bolt of Cowl Side J/B LH

(Cont. next page)

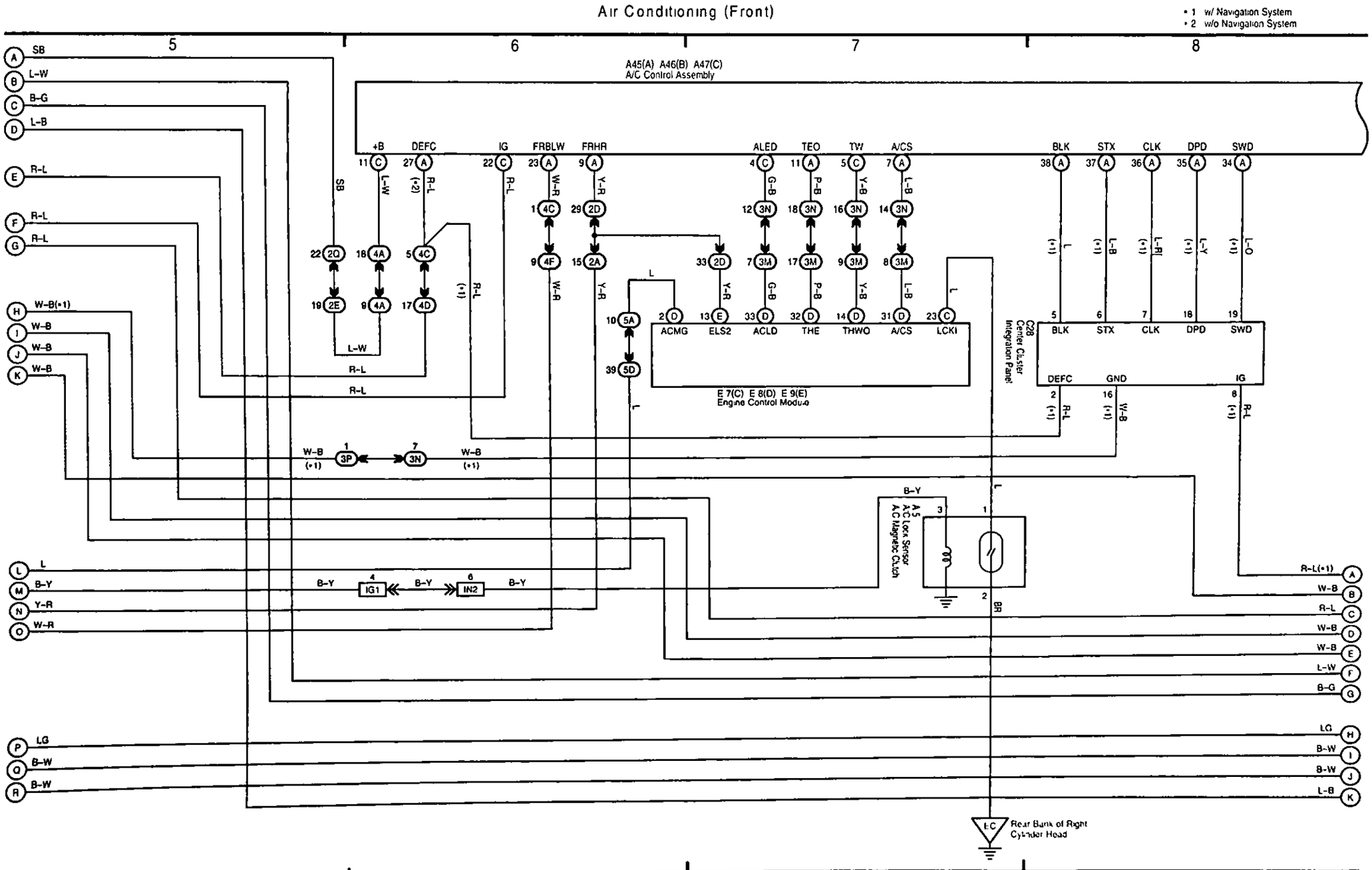

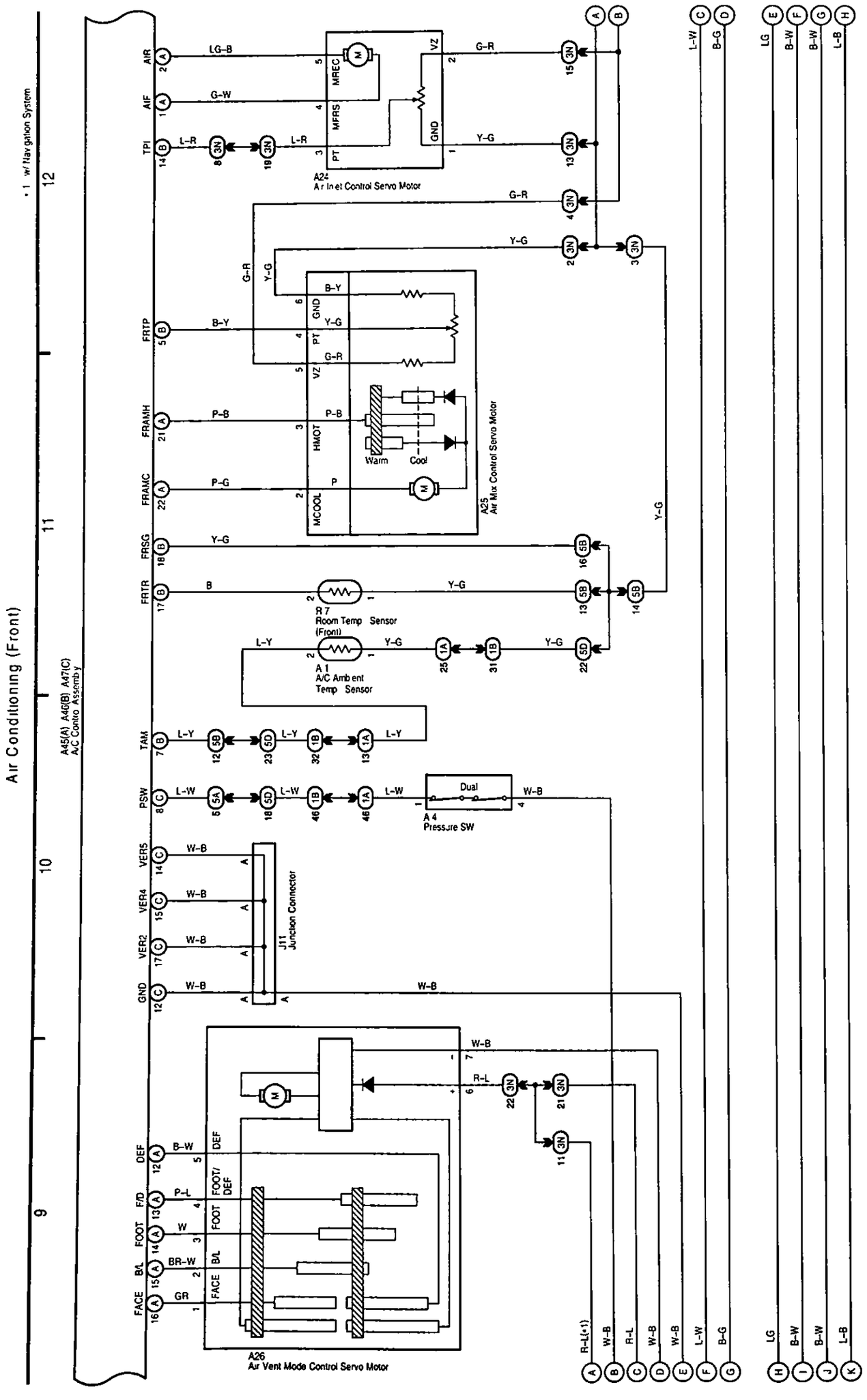
(Cont. next page)
31 LAND CRUISER (Cont' d)
Air Conditioning (Front)
A45(A) A46(B) A47(C)
A/C Control Assembly
* 1 w/ Navigation System
9
10
11
12
AIR
AIF
TPI
FRTP
FRAMH
FRAMC
FRSG
FRTR
TAM
PSW
VER5
VER4
VER2
GND
DEF
F/D
FOOT
B/L
FACE
A24
Air Inlet Control Servo Motor
MREC
MFRS
PT
VZ
GND
A25
Air Mix Control Servo Motor
HMOT
P
MCOOL
Warm
Cool
R7
Room Temp Sensor
(Front)
A1
A/C Ambient
Temp Sensor
A4
Pressure SW
Dual
J11
Junction Connector
A26
Air Vent Mode Control Servo Motor
FOOT/
DEF
B/L
R-L(+1)
W-B
R-L
W-B
W-B
L-W
B-G
LG
B-W
B-W
L-B

(Cont. next page)

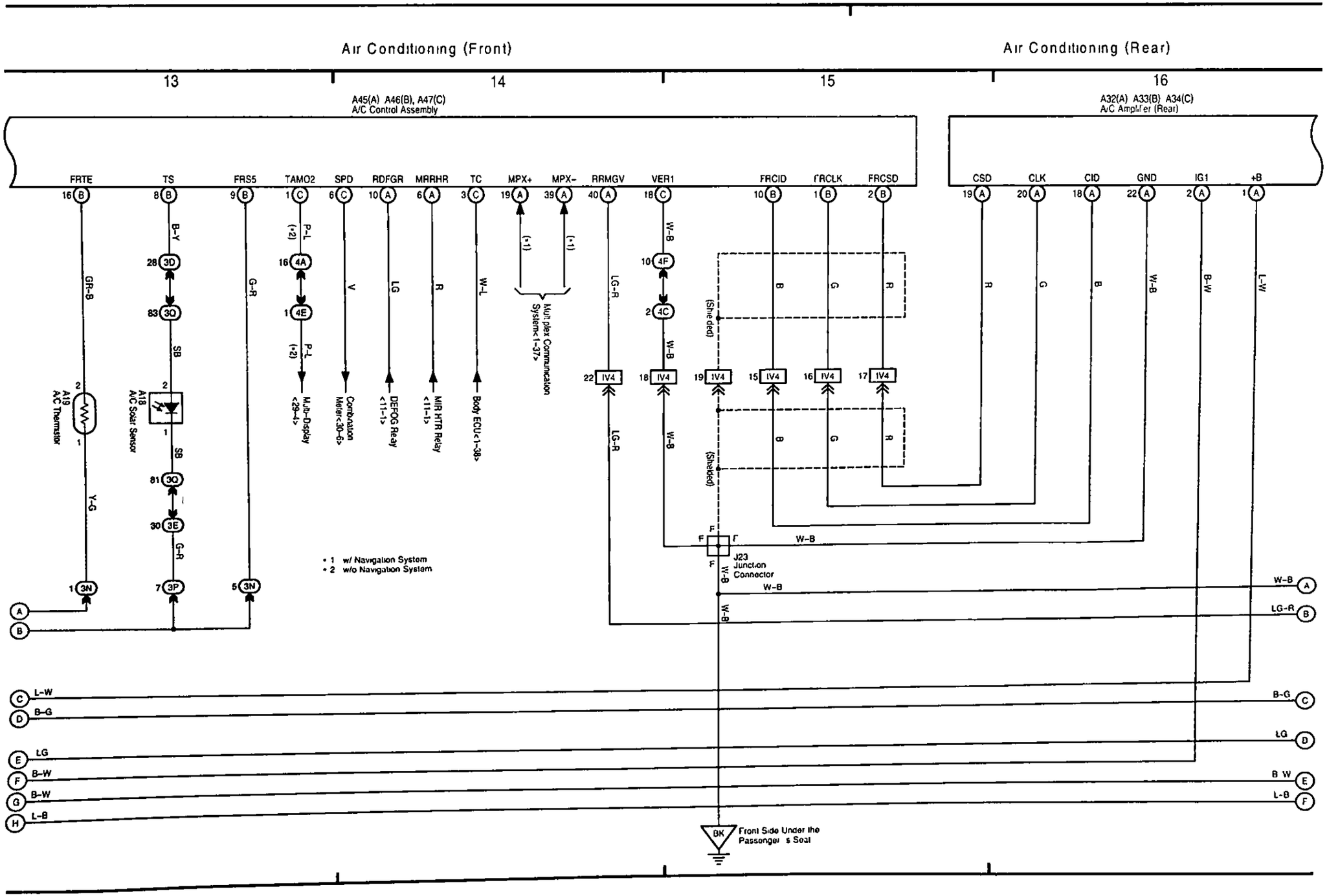

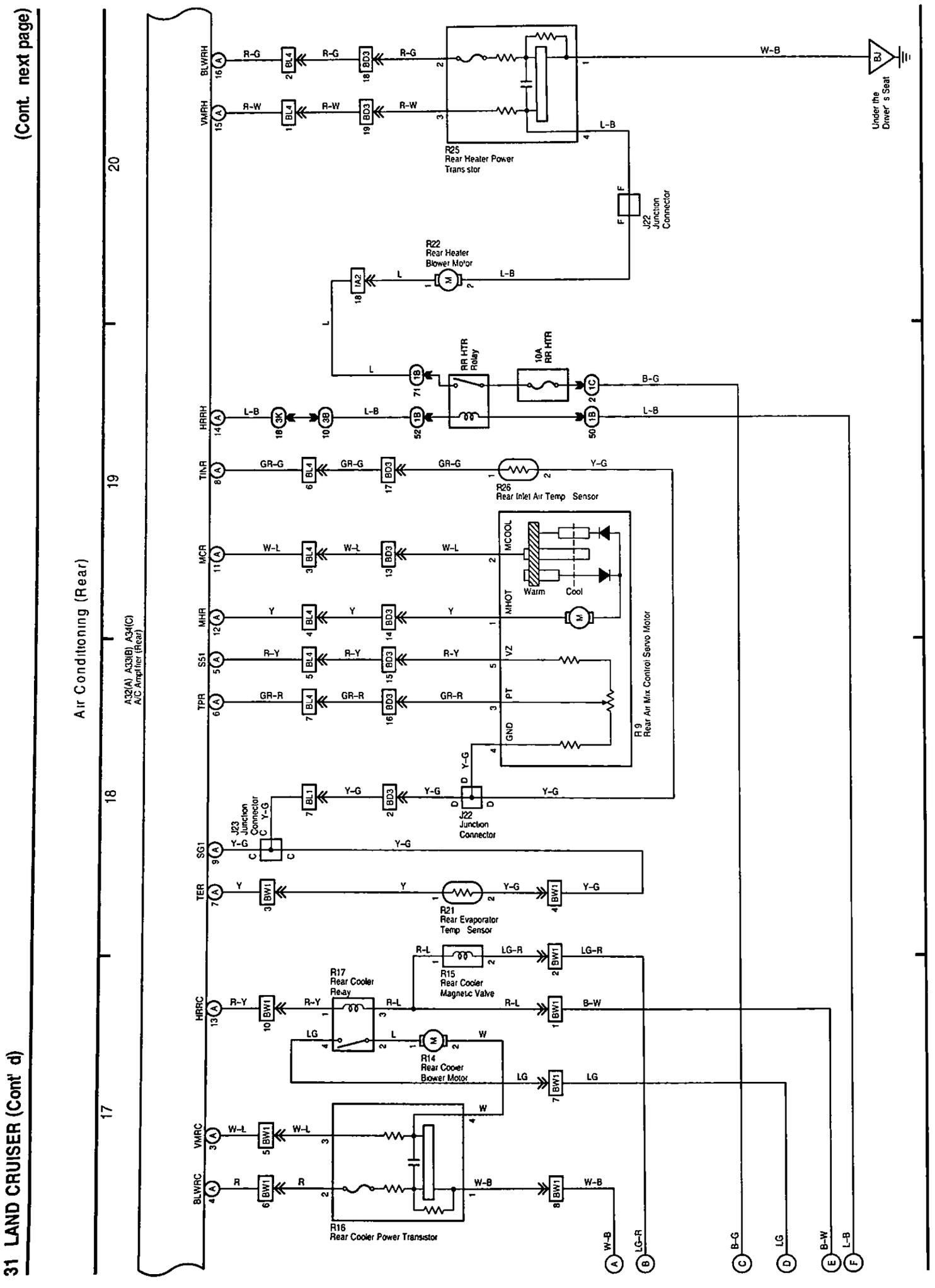
(Cont. next page)
Air Conditioning (Rear)
A32(A) A33(B) A34(C)
A/C Amplifier (Rear)
20
19
18
17
BLWRH
VMRH
HRRH
TIN-R
MCR
MHR
SSI
TPR
SG1
TER
HRRC
VMRC
BLWRC
R25
Rear Heater Power Transistor
R22
Rear Heater Blower Motor
J22
Junction Connector
RR HTR Relay
10A RR HTR
R26
Rear Inlet Air Temp Sensor
R9
Rear Air Mix Control Servo Motor
MCOOL
MHOT
VZ
PT
GND
Warm
Cool
J23
Junction Connector
R21
Rear Evaporator Temp Sensor
R17
Rear Cooler Relay
R15
Rear Cooler Magnetic Valve
R14
Rear Cooler Blower Motor
R16
Rear Cooler Power Transistor
Under the Driver's Seat
31 LAND CRUISER (Cont' d)

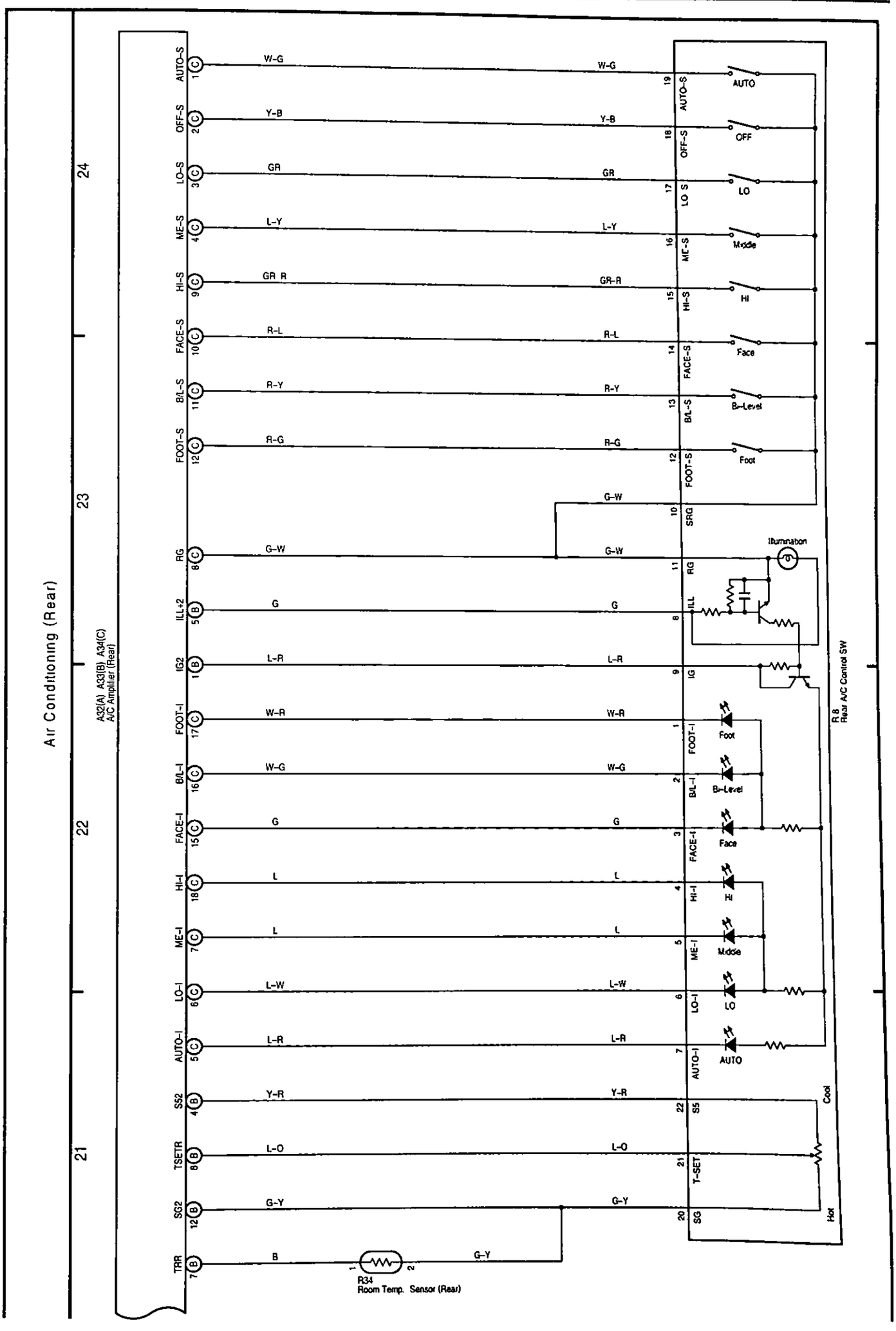
Air Conditioning (Rear)
21
22
23
24
A32(A) A33(B) A34(C)
A/C Amplifier (Rear)
AUTO-S
OFF-S
LO-S
ME-S
HI-S
FACE-S
B/L-S
FOOT-S
RG
ILL+2
IG2
FOOT-I
B/L-I
FACE-I
HI-I
ME-I
LO-I
AUTO-I
SS2
TSETR
SG2
TRR
W-G
Y-B
GR
L-Y
GR-R
R-L
R-Y
R-G
G-W
G
L-R
W-R
L
L-W
Y-R
L-O
G-Y
B
R34
Room Temp. Sensor (Rear)
AUTO
OFF
LO
Middle
HI
Face
B-Level
Foot
SRG
IG
T-SET
SS
Cool
Hot
Illumination
R.8
Rear A/C Control SW

OVERSEAS CUSTOMER SERVICE TECHNICAL DIVISION
TOYOTA MOTOR CORPORATION

PRINTED IN JAPAN(S)
First Printing : Aug. 20,2002 01-020820-00