F ELECTRICAL WIRING DIAGRAM (System Circuits)

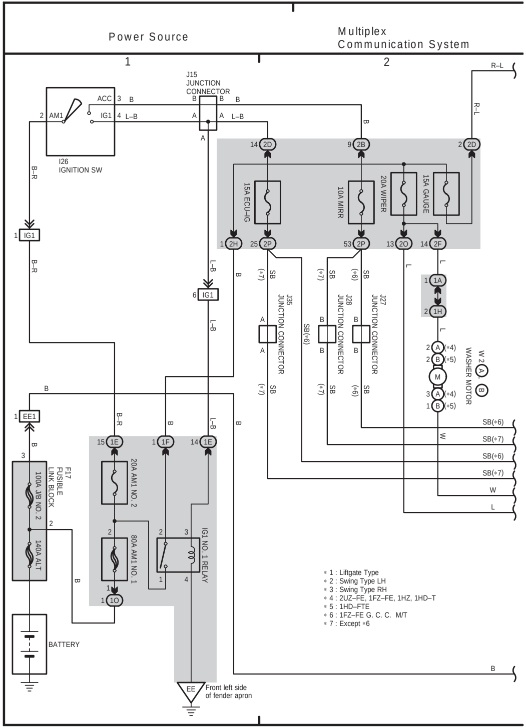
Power Source
Multiplex Communication System
1
2
J15 JUNCTION CONNECTOR
I26 IGNITION SW
ACC
AM1
IG1
B
L–B
B–R
R–L
15A ECU–IG
10A MIRR
20A WIPER
15A GAUGE
14 2D
9 2B
2 2D
1 2H
25 2P
53 2P
13 2O
14 2F
1 IG1
6 IG1
1 1A
2 1H
J35 JUNCTION CONNECTOR
J28 JUNCTION CONNECTOR
J27 JUNCTION CONNECTOR
W 2 A, B WASHER MOTOR
M
SB(∗6)
SB(∗7)
W
L
1 EE1
F17 FUSIBLE LINK BLOCK
100A J/B NO. 2
140A ALT
15 1E
1 1F
14 1E
20A AM1 NO. 2
80A AM1 NO. 1
IG1 NO. 1 RELAY
1 1O
BATTERY
EE
Front left side of fender apron

∗ 1 : Liftgate Type
∗ 2 : Swing Type LH
∗ 3 : Swing Type RH
∗ 4 : 2UZ–FE, 1FZ–FE, 1HZ, 1HD–T
∗ 5 : 1HD–FTE
∗ 6 : 1FZ–FE G. C. C. M/T
∗ 7 : Except ∗6

(Cont. next page)

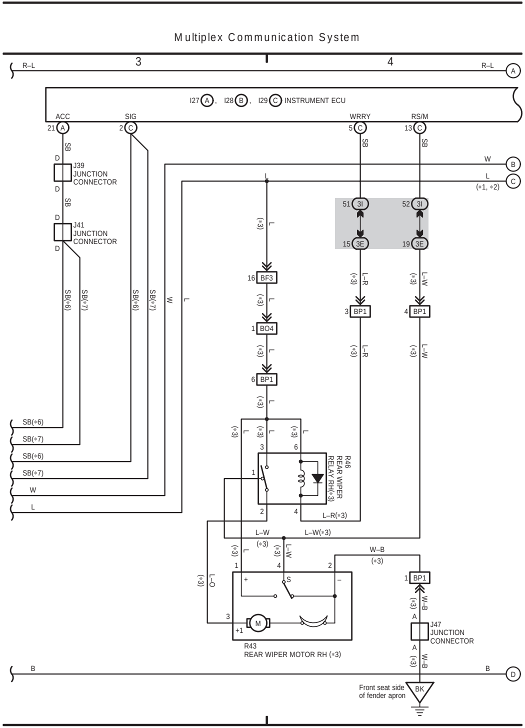
Multiplex Communication System
3
4
R–L
I27 A, I28 B, I29 C INSTRUMENT ECU
ACC
SIG
WRRY
RS/M
21 A
2 C
5 C
13 C
J39 JUNCTION CONNECTOR
J41 JUNCTION CONNECTOR
W
L
(∗1, ∗2)
51 3I
52 3I
15 3E
19 3E
16 BF3
1 BO4
6 BP1
3 BP1
4 BP1
L–R
L–W
R46 REAR WIPER RELAY RH(∗3)
L–R(∗3)
L–W(∗3)
W–B
L–O
R43 REAR WIPER MOTOR RH (∗3)
M
+1
1 BP1
J47 JUNCTION CONNECTOR
B
BK
Front seat side of fender apron
A
B
C
D

Multiplex Communication System

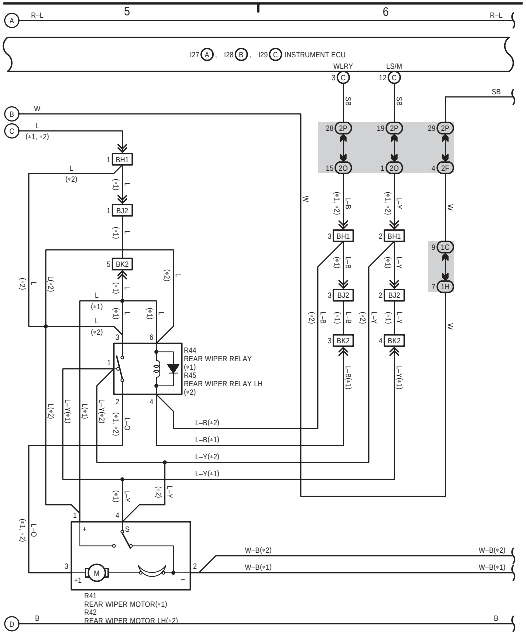
5
6
A R–L
R–L
I27 A, I28 B, I29 C INSTRUMENT ECU
WLRY
LS/M
3 C
12 C
SB
B W
C L
(*1, *2)
1 BH1
L (*2)
(*1) L
1 BJ2
(*1) L
5 BK2
(*1) L
L (*1)
L (*2)
L(*2)
(*2) L
3
6
1
2
4
R44
REAR WIPER RELAY
(*1)
R45
REAR WIPER RELAY LH
(*2)
28 2P
19 2P
29 2P
15 2O
1 2O
4 2F
(*1, *2) L–B
(*1, *2) L–Y
3 BH1
2 BH1
(*1) L–B
(*1) L–Y
3 BJ2
2 BJ2
(*2) L–B
(*1) L–B
(*2) L–Y
(*1) L–Y
3 BK2
4 BK2
L–B(*1)
L–Y(*1)
9 1C
7 1H
W
L(*2)
L–Y(*1)
L(*1)
L–Y(*2)
(*1, *2) L–O
L–B(*2)
L–B(*1)
L–Y(*2)
L–Y(*1)
(*1) L–Y
(*2) L–Y
(*1, *2) L–O
1
4
S
+
3
M
+1
2
–
W–B(*2)
W–B(*1)
R41
REAR WIPER MOTOR(*1)
R42
REAR WIPER MOTOR LH(*2)
D B
B

(Cont. next page)

Multiplex Communication System

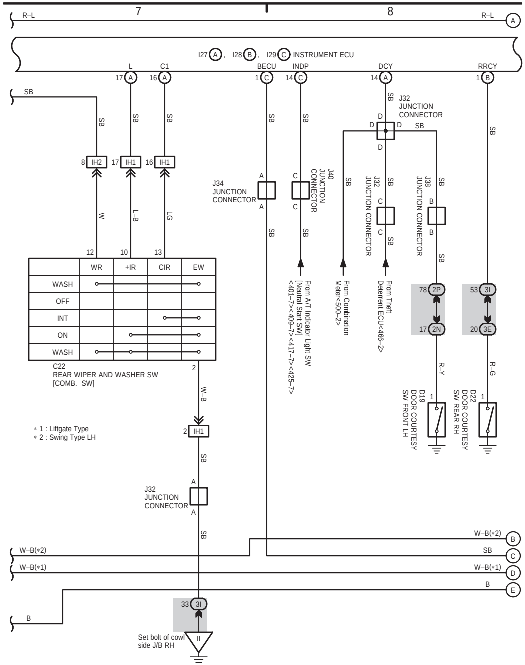
7
8
R–L
R–L A
I27 A, I28 B, I29 C INSTRUMENT ECU
L
C1
BECU
INDP
DCY
RRCY
17 A
16 A
1 C
14 C
14 A
1 B
SB
J32
JUNCTION
CONNECTOR
8 IH2
17 IH1
16 IH1
W
L–B
LG
J34
JUNCTION
CONNECTOR
J40
JUNCTION
CONNECTOR
J32
JUNCTION CONNECTOR
J38
JUNCTION CONNECTOR
From A/T Indicator Light SW
[Neutral Start SW]
<401–7><409–7><417–7><425–7>
From Combination
Meter<500–2>
From Theft
Deterrent ECU<466–2>
12
10
13
WR
+IR
CIR
EW
WASH
OFF
INT
ON
WASH
C22
REAR WIPER AND WASHER SW
[COMB. SW]
2
W–B
2 IH1
J32
JUNCTION
CONNECTOR
78 2P
17 2N
53 3I
20 3E
R–Y
R–G
D19
DOOR COURTESY
SW FRONT LH
D22
DOOR COURTESY
SW REAR RH
W–B(*2) B
SB C
W–B(*1) D
B E
W–B(*2)
W–B(*1)
B
33 3I
II
Set bolt of cowl
side J/B RH

* 1 : Liftgate Type
* 2 : Swing Type LH

Multiplex Communication System

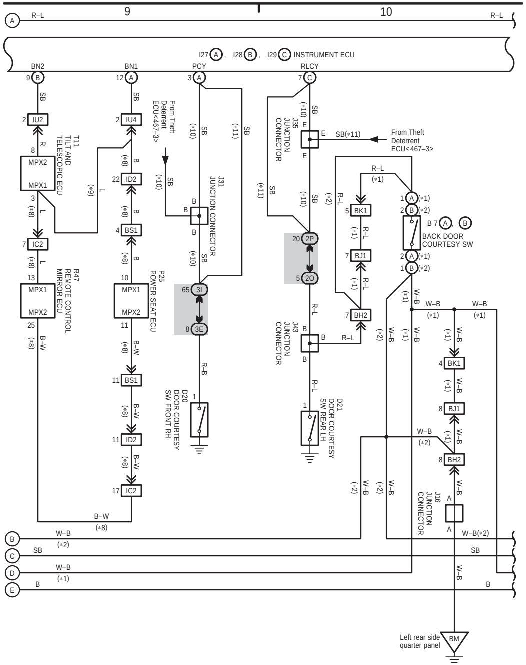
A
R–L
9
10
R–L
I27 (A), I28 (B), I29 (C) INSTRUMENT ECU
BN2
BN1
PCY
RLCY
9 (B)
12 (A)
3 (A)
7 (C)
SB
IU2
IU4
R
L
B
T11 TILT AND TELESCOPIC ECU
MPX2
MPX1
(*8)
(*9)
22 ID2
From Theft Deterrent ECU<467–3>
(*10)
J31 JUNCTION CONNECTOR
(*11)
J35 JUNCTION CONNECTOR
E
SB(*11)
From Theft Deterrent ECU<467–3>
R–L
(*1)
(*2)
4 BS1
IC2
BK1
BJ1
BH2
1 (A) (*1)
2 (B) (*2)
B 7 (A), (B) BACK DOOR COURTESY SW
20 (2P)
5 (2O)
65 (3I)
8 (3E)
R47 REMOTE CONTROL MIRROR ECU
MPX1
MPX2
P25 POWER SEAT ECU
B–W
W–B
R–B
J43 JUNCTION CONNECTOR
11 BS1
11 ID2
17 IC2
D20 DOOR COURTESY SW FRONT RH
D21 DOOR COURTESY SW REAR LH
4 BK1
8 BJ1
8 BH2
J16 JUNCTION CONNECTOR
B–W (*8)
B
W–B (*2)
C
SB
D
W–B (*1)
E
B
W–B(*2)
Left rear side quarter panel
BM

LHD

LHD

(Cont. next page)

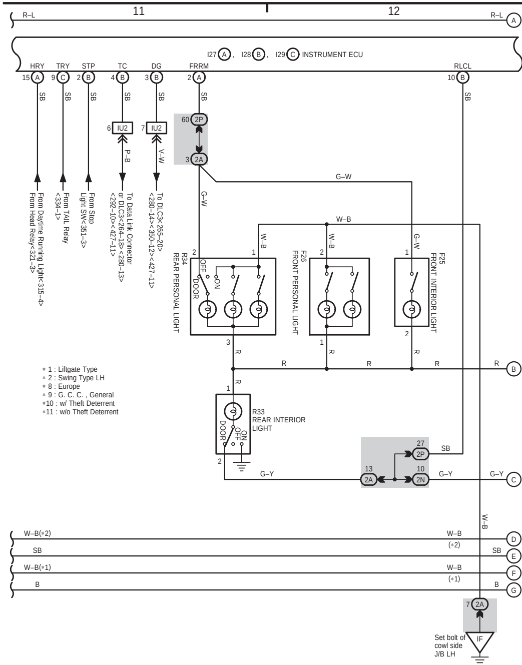
R–L
11
12
R–L
A
I27 (A), I28 (B), I29 (C) INSTRUMENT ECU
HRY
TRY
STP
TC
DG
FRRM
RLCL
15 (A)
9 (C)
2 (B)
4 (B)
3 (B)
2 (A)
10 (B)
SB
6 IU2
7 IU2
P–B
V–W
60 (2P)
3 (2A)
G–W
W–B
From Daytime Running Light<315–4> From Head Relay<321–3>
From TAIL Relay <334–1>
From Stop Light SW<351–3>
To Data Link Connector or DLC3<264–18><280–13><292–10><427–11>
To DLC3<265–20><280–14><350–12><427–11>
R34 REAR PERSONAL LIGHT
OFF
DOOR
ON
F26 FRONT PERSONAL LIGHT
F25 FRONT INTERIOR LIGHT
R
B
R33 REAR INTERIOR LIGHT
DOOR
ON
OFF
27 (2P)
13 (2A)
10 (2N)
SB
G–Y
C
W–B(*2)
D
SB
E
W–B(*1)
F
B
G
7 (2A)
Set bolt of cowl side J/B LH
IF

∗1 : Liftgate Type
∗2 : Swing Type LH
∗8 : Europe
∗9 : G. C. C. , General
∗10 : w/ Theft Deterrent
∗11 : w/o Theft Deterrent

Multiplex Communication System

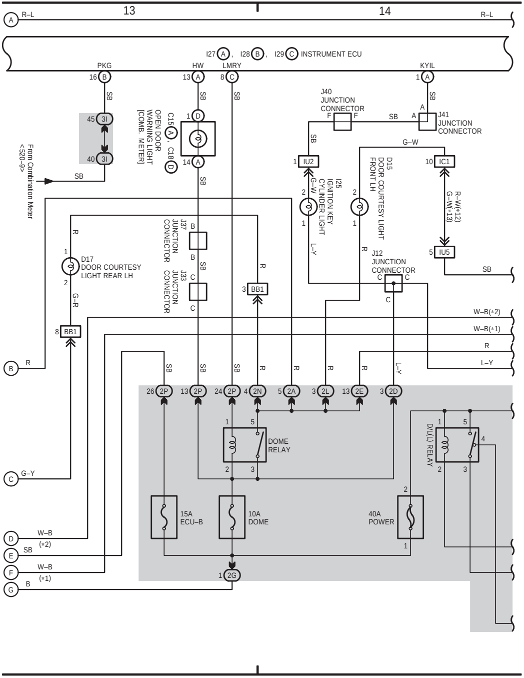
13
14
R–L
I27 A, I28 B, I29 C INSTRUMENT ECU
PKG
HW
LMRY
KYIL
16 B
13 A
8 C
1 A
SB
45 3I
40 3I
From Combination Meter <520–9>
C15 A, C18 D
OPEN DOOR WARNING LIGHT [COMB. METER]
1 D
14 A
J40 JUNCTION CONNECTOR
J41 JUNCTION CONNECTOR
G–W
1 IU2
10 IC1
I25 IGNITION KEY CYLINDER LIGHT
D15 DOOR COURTESY LIGHT FRONT LH
R–W(*12)
G–W(*13)
5 IU5
J37 JUNCTION CONNECTOR
J33 JUNCTION CONNECTOR
D17 DOOR COURTESY LIGHT REAR LH
G–R
8 BB1
3 BB1
L–Y
J12 JUNCTION CONNECTOR
W–B(*2)
W–B(*1)
R
26 2P
13 2P
24 2P
4 2N
5 2A
3 2L
13 2E
3 2D
DOME RELAY
D/L(L) RELAY
15A ECU–B
10A DOME
40A POWER
1 2G
G–Y
W–B
(*2)
(*1)
B

Multiplex Communication System

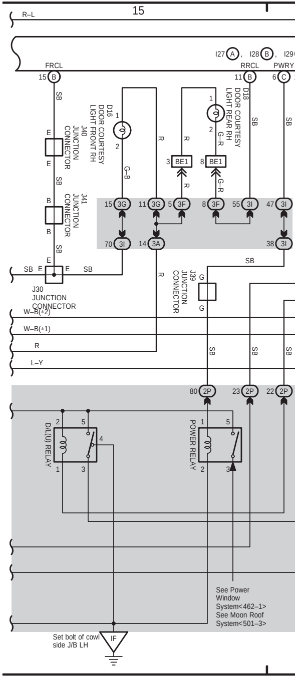
15
R–L
I27 A, I28 B, I29
FRCL
RRCL
PWRY
15 B
11 B
6 C
J40 JUNCTION CONNECTOR
D16 DOOR COURTESY LIGHT FRONT RH
D18 DOOR COURTESY LIGHT REAR RH
G–B
G–R
3 BE1
8 BE1
J41 JUNCTION CONNECTOR
15 3G
11 3G
5 3F
8 3F
55 3I
47 3I
70 3I
14 3A
38 3I
J30 JUNCTION CONNECTOR
J39 JUNCTION CONNECTOR
W–B(*2)
W–B(*1)
R
L–Y
SB
80 2P
23 2P
22 2P
D/L(U) RELAY
POWER RELAY
See Power Window System<462–1>
See Moon Roof System<501–3>
Set bolt of cowl side J/B LH
IF

(Cont. next page)

∗ 1 : Liftgate Type
∗ 2 : Swing Type LH
∗10 : w/ Theft Deterrent
∗11 : w/o Theft Deterrent
∗12 : 2UZ–FE G. C. C.
∗13 : Except ∗12

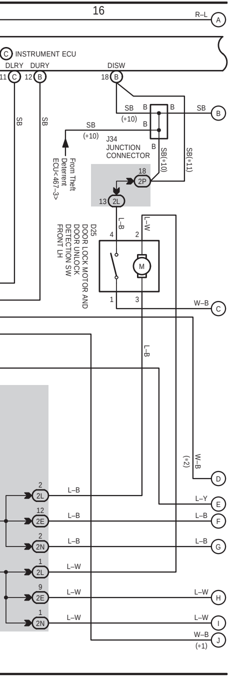
16
R–L
A
C INSTRUMENT ECU
DLRY
DURY
DISW
11 C
12 B
18 B
SB
SB
SB
B
B
B
B
(∗10)
SB
(∗10)
J34
JUNCTION
CONNECTOR
From Theft Deterrent ECU<467–3>
SB(∗10)
SB(∗11)
18 2P
13 2L
L–B
L–W
4
2
M
1
3
D25
DOOR LOCK MOTOR AND
DOOR UNLOCK
DETECTION SW
FRONT LH
W–B
C
L–B
W–B
(∗2)
D
2 2L
L–B
12 2E
L–B
2 2N
L–B
1 2L
L–W
9 2E
L–W
1 2N
L–W
L–Y
E
L–B
F
L–B
G
L–W
H
L–W
I
W–B
(∗1)
J

LHD

LHD

Multiplex Communication System

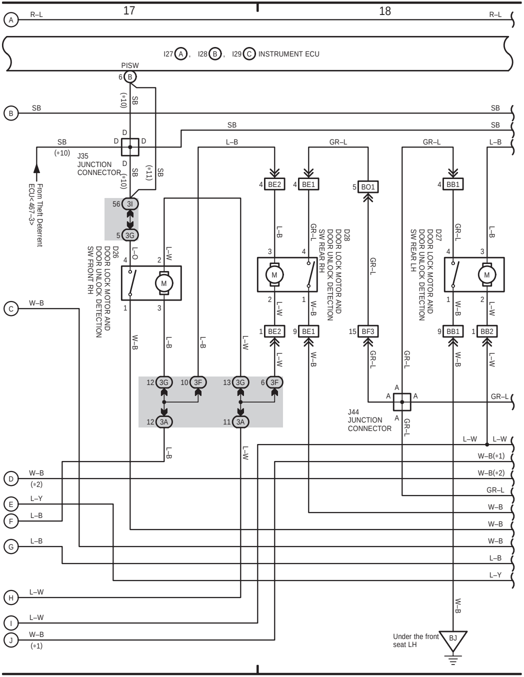
17
18
A
R–L
R–L
I27 A, I28 B, I29 C INSTRUMENT ECU
PISW
6 B
(∗10)
SB
B
SB
SB
SB
SB
D
D
D
D
SB
(∗10)
J35
JUNCTION
CONNECTOR
From Theft Deterrent ECU<467–3>
SB
(∗10)
(∗11)
SB
56 3I
5 3G
L–O
4
2
L–W
M
1
3
D26
DOOR LOCK MOTOR AND
DOOR UNLOCK DETECTION
SW FRONT RH
L–B
GR–L
GR–L
L–B
4 BE2
4 BE1
5 BO1
4 BB1
L–B
GR–L
GR–L
GR–L
L–B
3
4
4
3
M
M
2
1
1
2
L–W
W–B
W–B
L–W
D28
DOOR LOCK MOTOR AND
DOOR UNLOCK DETECTION
SW REAR RH
D27
DOOR LOCK MOTOR AND
DOOR UNLOCK DETECTION
SW REAR LH
1 BE2
9 BE1
15 BF3
9 BB1
1 BB2
L–W
W–B
GR–L
GR–L
W–B
L–W
C
W–B
W–B
L–B
L–B
L–W
12 3G
10 3F
13 3G
6 3F
12 3A
11 3A
L–B
L–W
A
A
A
A
J44
JUNCTION
CONNECTOR
GR–L
GR–L
L–W
L–W
W–B(∗1)
D
W–B
(∗2)
W–B(∗2)
E
L–Y
GR–L
F
L–B
W–B
W–B
G
L–B
W–B
L–B
L–Y
H
L–W
I
L–W
J
W–B
(∗1)
W–B
Under the front seat LH
BJ

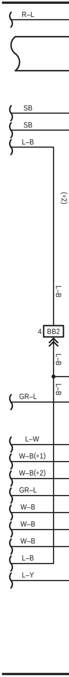
R–L
SB
SB
L–B
(∗2)
L–B
4 BB2
L–B
L–B
GR–L
L–W
W–B(∗1)
W–B(∗2)
GR–L
W–B
W–B
W–B
L–B
L–Y

(Cont. next page)

∗ 1 : Liftgate Type
∗ 2 : Swing Type LH
∗10 : w/ Theft Deterrent
∗11 : w/o Theft Deterrent
∗14 : w/ Memory

Multiplex Communication System

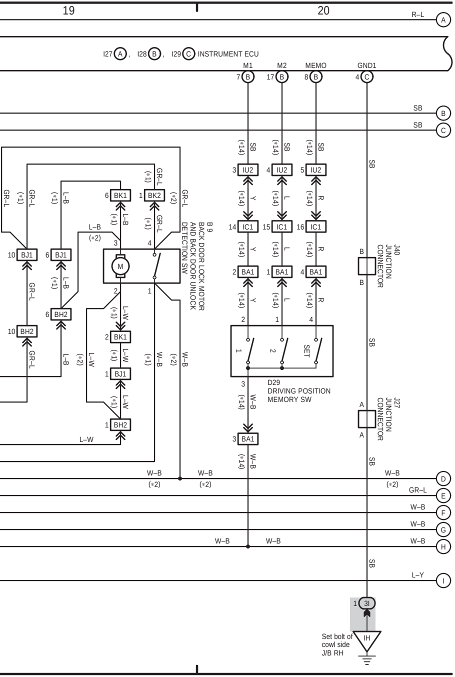
19
20
R–L
I27 A, I28 B, I29 C INSTRUMENT ECU
M1
M2
MEMO
GND1
SB
B 9
BACK DOOR LOCK MOTOR
AND BACK DOOR UNLOCK
DETECTION SW
M
BJ1
BH2
BK1
BK2
IU2
IC1
BA1
D29
DRIVING POSITION
MEMORY SW
1
2
SET
J40
JUNCTION
CONNECTOR
J27
JUNCTION
CONNECTOR
3I
IH
Set bolt of
cowl side
J/B RH
GR–L
L–B
L–W
W–B
Y
L
R
L–Y
(∗1)
(∗2)
(∗14)
A
B
C
D
E
F
G
H
I

Multiplex Communication System

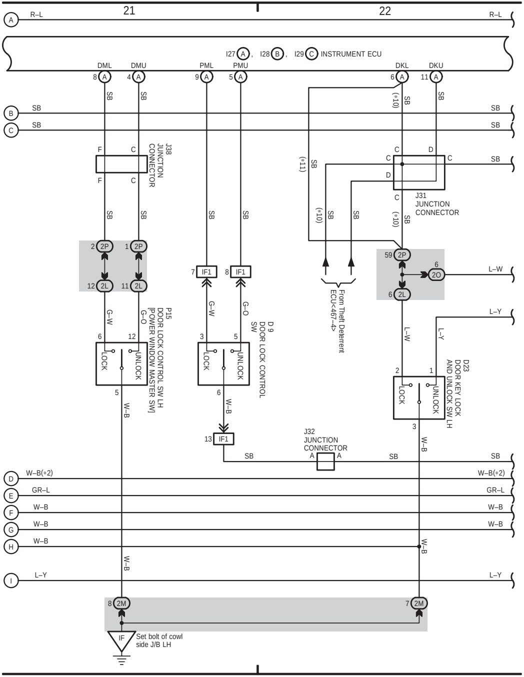
21
22
R–L
I27 A, I28 B, I29 C INSTRUMENT ECU
DML
DMU
PML
PMU
DKL
DKU
SB
J38
JUNCTION
CONNECTOR
J31
JUNCTION
CONNECTOR
2P
2L
2O
IF1
From Theft Deterrent
ECU<467–4>
P15
DOOR LOCK CONTROL SW LH
[POWER WINDOW MASTER SW]
D 9
DOOR LOCK CONTROL
SW
D23
DOOR KEY LOCK
AND UNLOCK SW LH
LOCK
UNLOCK
J32
JUNCTION
CONNECTOR
2M
IF
Set bolt of cowl
side J/B LH
G–W
G–O
L–W
L–Y
W–B
W–B(∗2)
GR–L
(∗10)
(∗11)
A
B
C
D
E
F
G
H
I

Multiplex Communication System

∗ 1 : Liftgate Type
∗ 2 : Swing Type LH
∗ 4 : 2UZ–FE, 1FZ–FE, 1HZ, 1HD–T
∗ 5 : 1HD–FTE
∗10 : w/ Theft Deterrent
∗11 : w/o Theft Deterrent

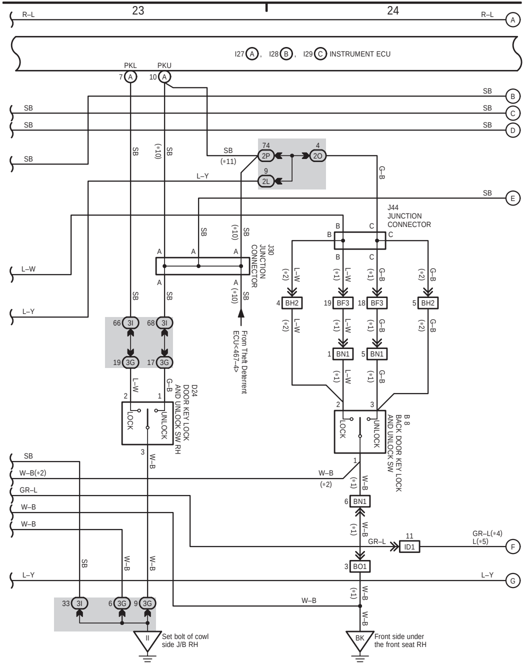
23
24
R–L
A
I27 A , I28 B , I29 C INSTRUMENT ECU
PKL
PKU
7 A
10 A
SB
B
C
D
E
(∗10)
(∗11)
74 2P
4 2O
9 2L
L–Y
G–B
L–W
J44 JUNCTION CONNECTOR
J30 JUNCTION CONNECTOR
From Theft Deterrent ECU<467–4>
(∗1)
(∗2)
4 BH2
19 BF3
18 BF3
5 BH2
1 BN1
5 BN1
66 3I
68 3I
19 3G
17 3G
D24 DOOR KEY LOCK AND UNLOCK SW RH
LOCK
UNLOCK
B 8 BACK DOOR KEY LOCK AND UNLOCK SW
W–B(∗2)
GR–L
W–B
6 BN1
11 ID1
GR–L(∗4) L(∗5)
F
G
3 BO1
33 3I
6 3G
9 3G
II
Set bolt of cowl side J/B RH
BK
Front side under the front seat RH

LHD

LHD

F ELECTRICAL WIRING DIAGRAM (System Circuits)

Multiplex Communication System

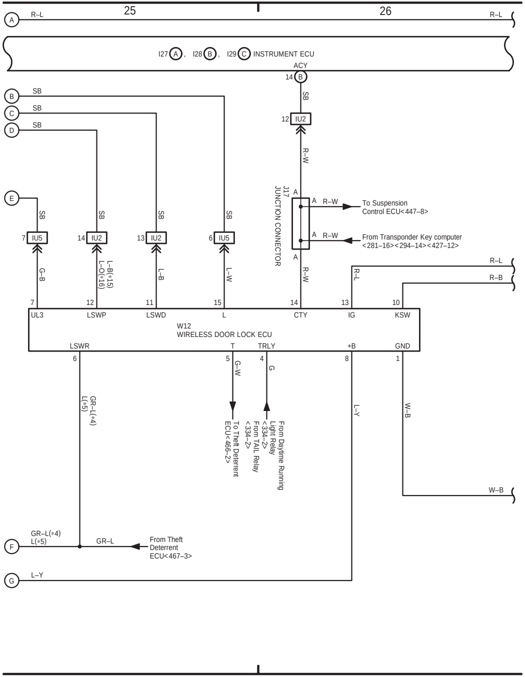
25
26
R–L
A
I27 A , I28 B , I29 C INSTRUMENT ECU
ACY
14 B
SB
12 IU2
R–W
J17 JUNCTION CONNECTOR
To Suspension Control ECU<447–8>
From Transponder Key computer <281–16><294–14><427–12>
B
C
D
E
7 IU5
14 IU2
13 IU2
6 IU5
G–B
L–B(∗15) L–O(∗16)
L–B
L–W
R–B
UL3
LSWP
LSWD
L
CTY
IG
KSW
W12 WIRELESS DOOR LOCK ECU
LSWR
T
TRLY
+B
GND
G–W
G
To Theft Deterrent ECU<466–2>
From TAIL Relay <334–2>
From Daytime Running Light Relay <334–2>
L–Y
W–B
GR–L(∗4) L(∗5)
F
G
GR–L
From Theft Deterrent ECU<467–3>

Multiplex Communication System

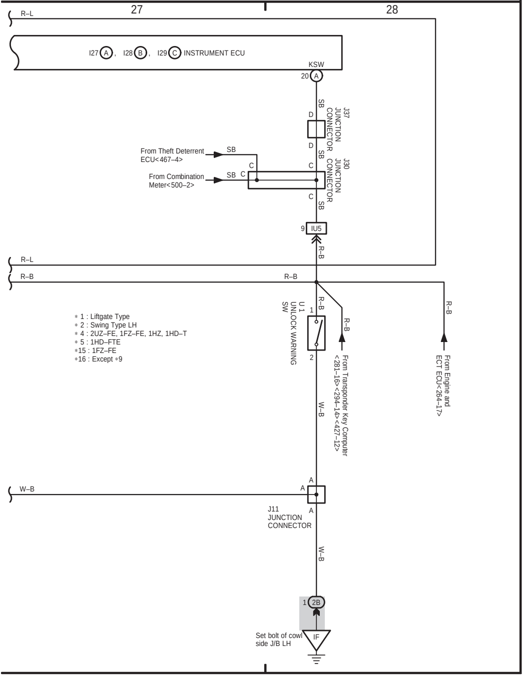
27
28
R–L
I27 (A), I28 (B), I29 (C) INSTRUMENT ECU
KSW
20 (A)
SB
D
J37 JUNCTION CONNECTOR
D
SB
From Theft Deterrent ECU<467–4>
SB
C
C
From Combination Meter<500–2>
SB
C
J30 JUNCTION CONNECTOR
C
SB
9 IU5
R–B
R–L
R–B
R–B
R–B
1
U 1 UNLOCK WARNING SW
2
R–B
From Transponder Key Computer <281–16><294–14><427–12>
R–B
From Engine and ECT ECU<264–17>
∗ 1 : Liftgate Type
∗ 2 : Swing Type LH
∗ 4 : 2UZ–FE, 1FZ–FE, 1HZ, 1HD–T
∗ 5 : 1HD–FTE
∗15 : 1FZ–FE
∗16 : Except ∗9
W–B
W–B
A
A
A
J11 JUNCTION CONNECTOR
W–B
1 2B
Set bolt of cowl side J/B LH
IF

LHD