BR15M–01
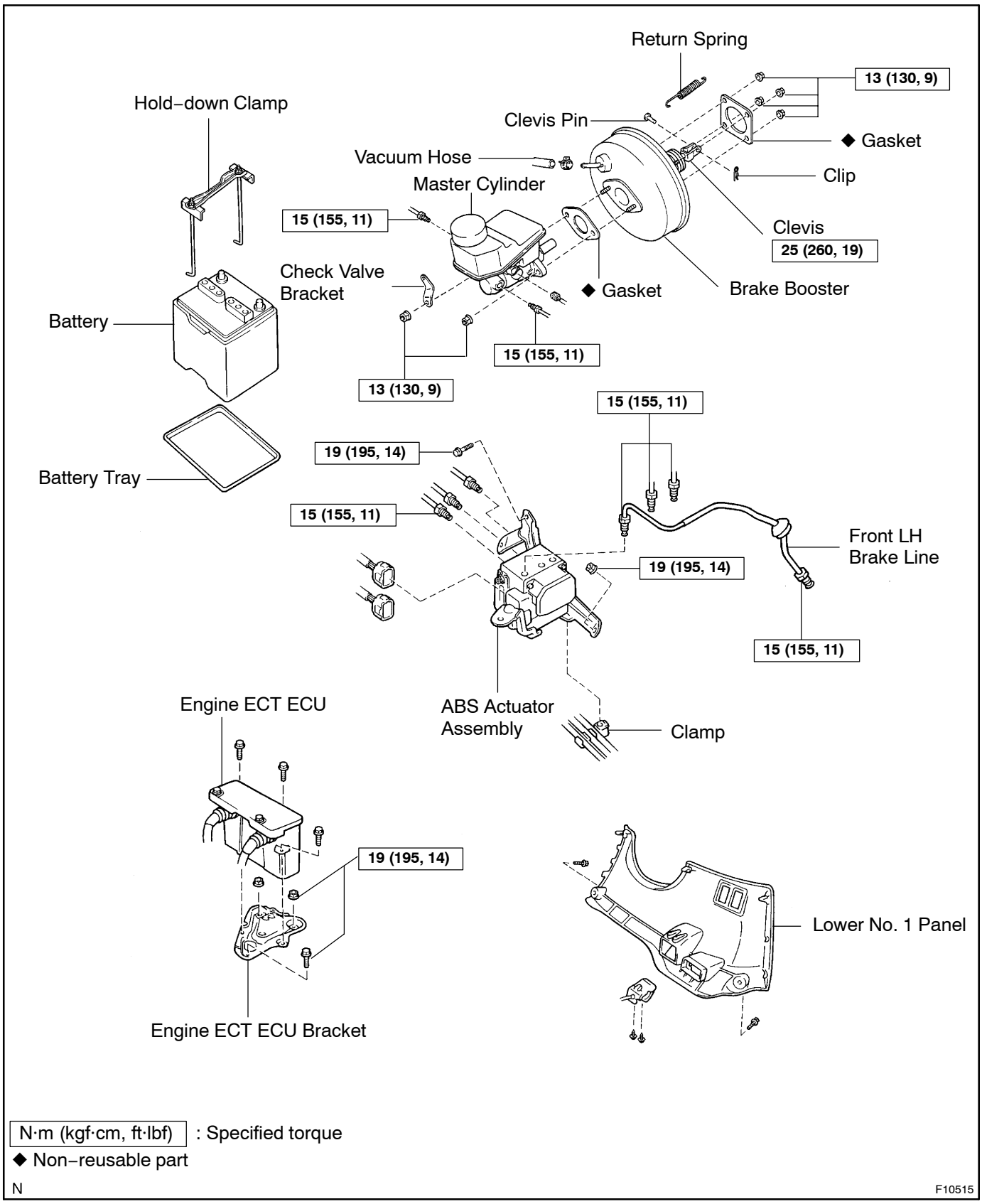
COMPONENTS