AC2JL–01
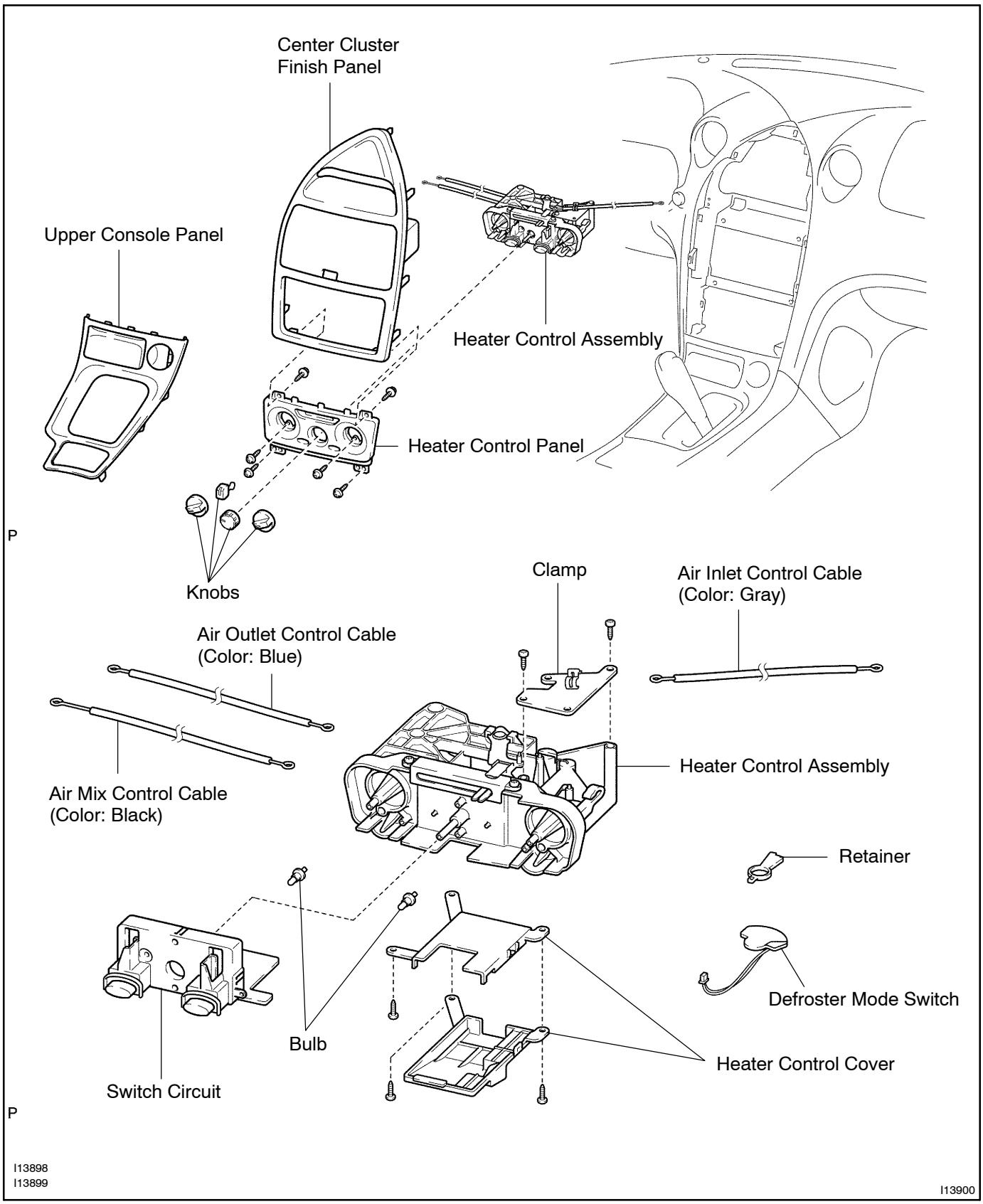
COMPONENTS