46. Remote Control Mirror System

A: WIRING DIAGRAM

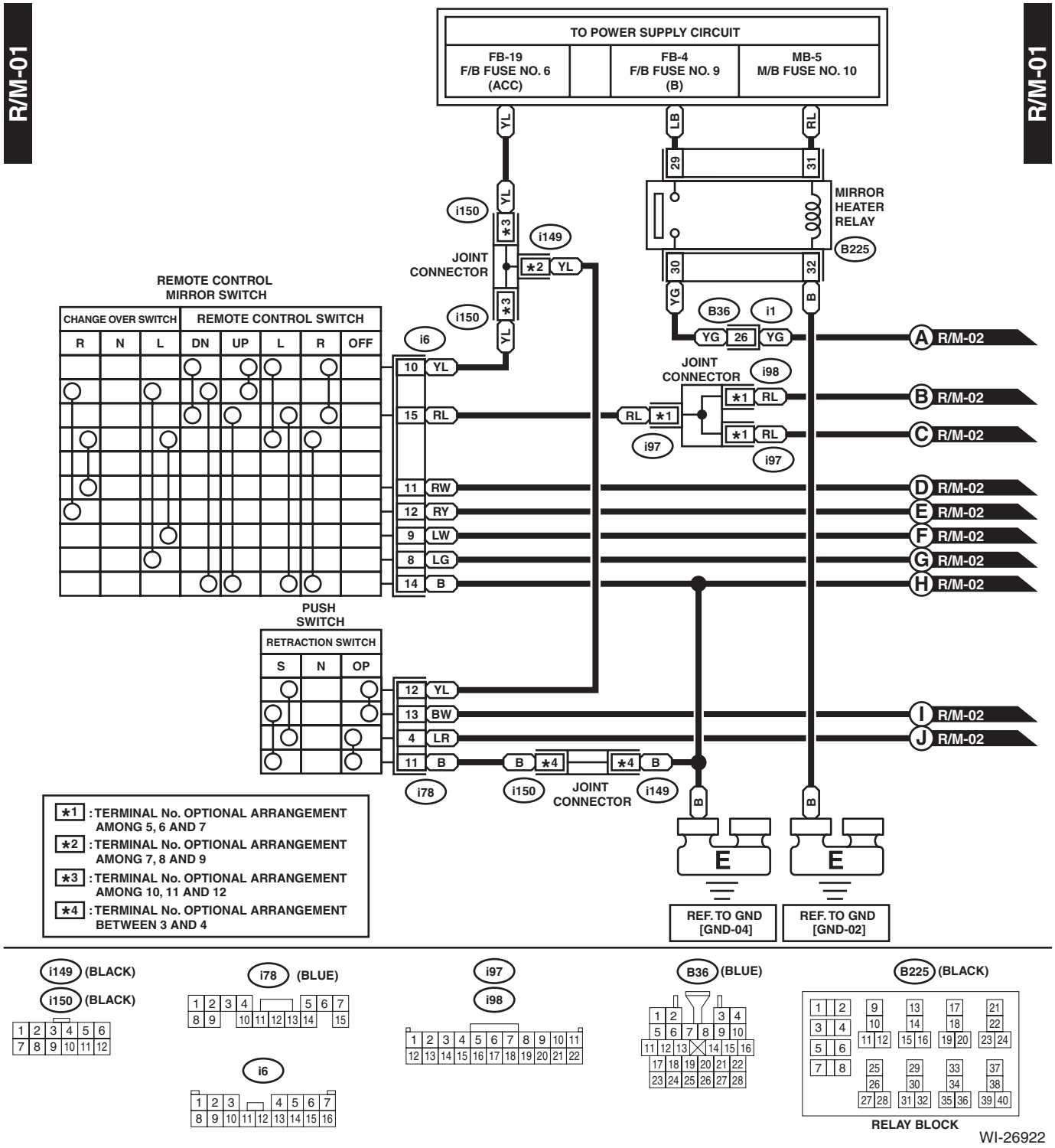

R/M-02

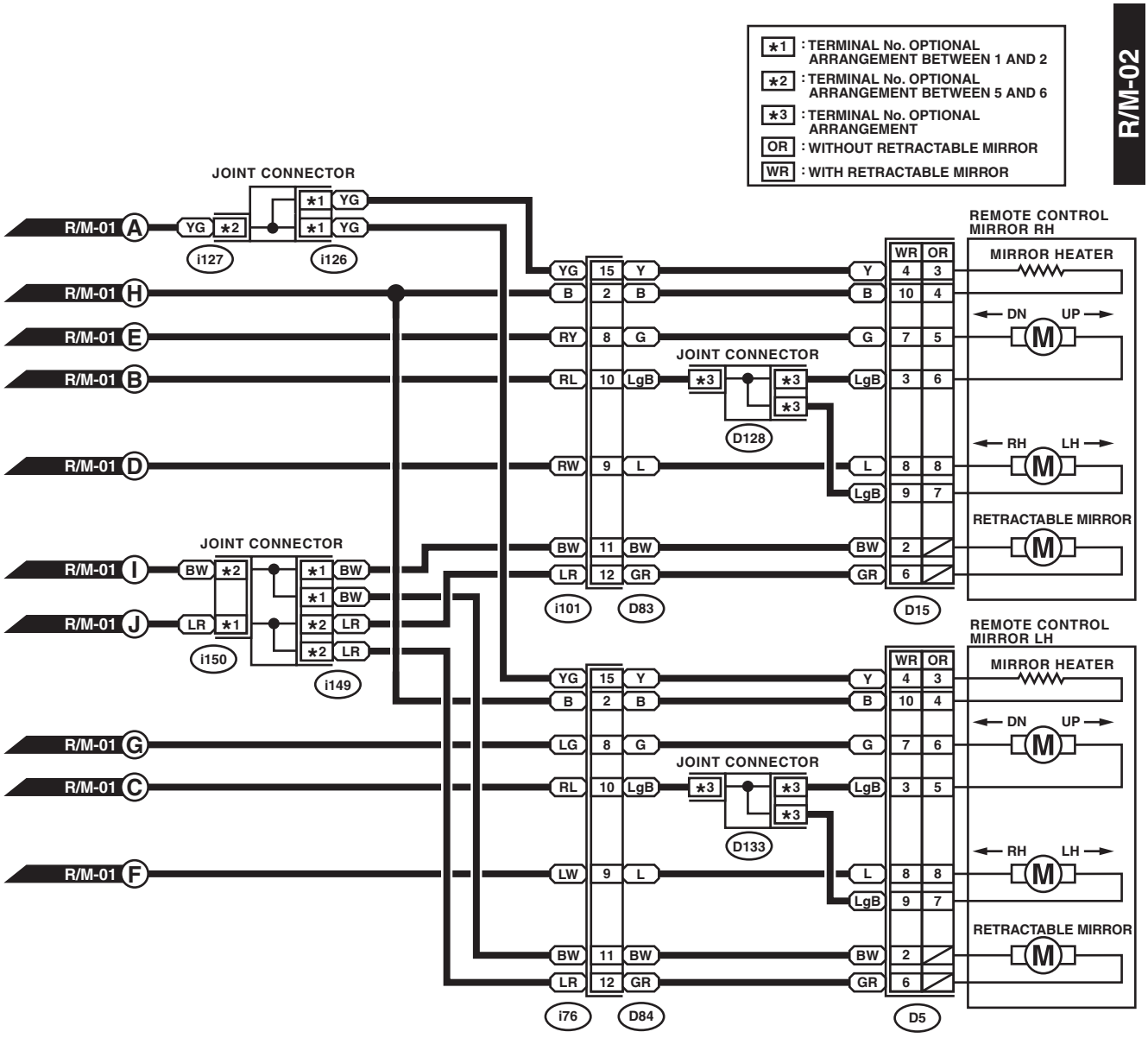

D128
D133

OR : D5 (GRAY)
OR : D15 (GRAY)

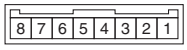

WR : D5
WR : D15

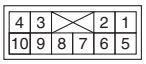

i126 (BLACK)
i127 (BLACK)
i149 (BLACK)
i150 (BLACK)

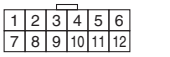

D83
D84

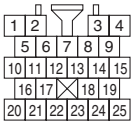

WI-16092