49.Coolant Temperature System
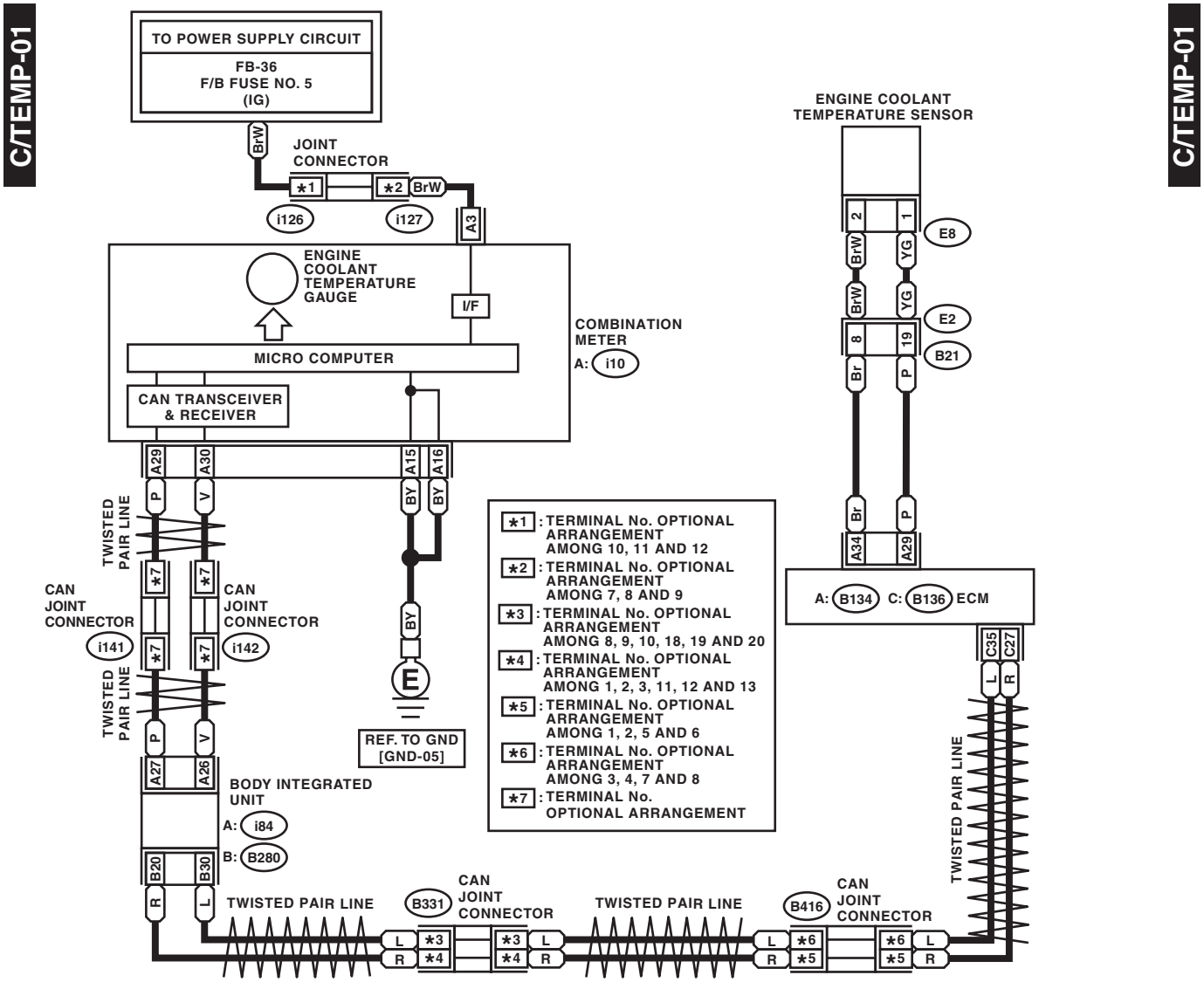
A: WIRING DIAGRAM