# 27.Stop Light System
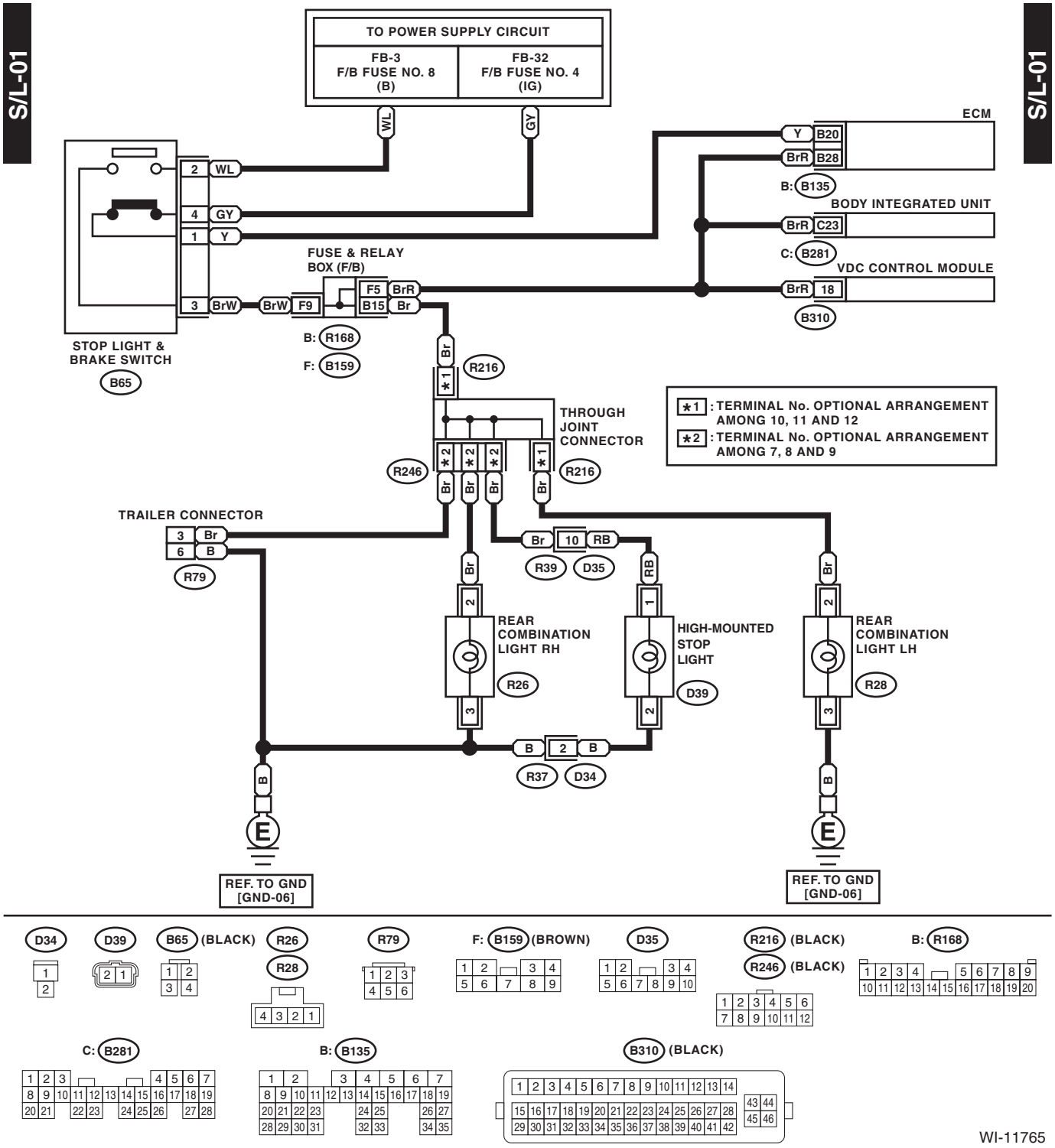
## A: WIRING DIAGRAM