30.Front Wiper and Washer System
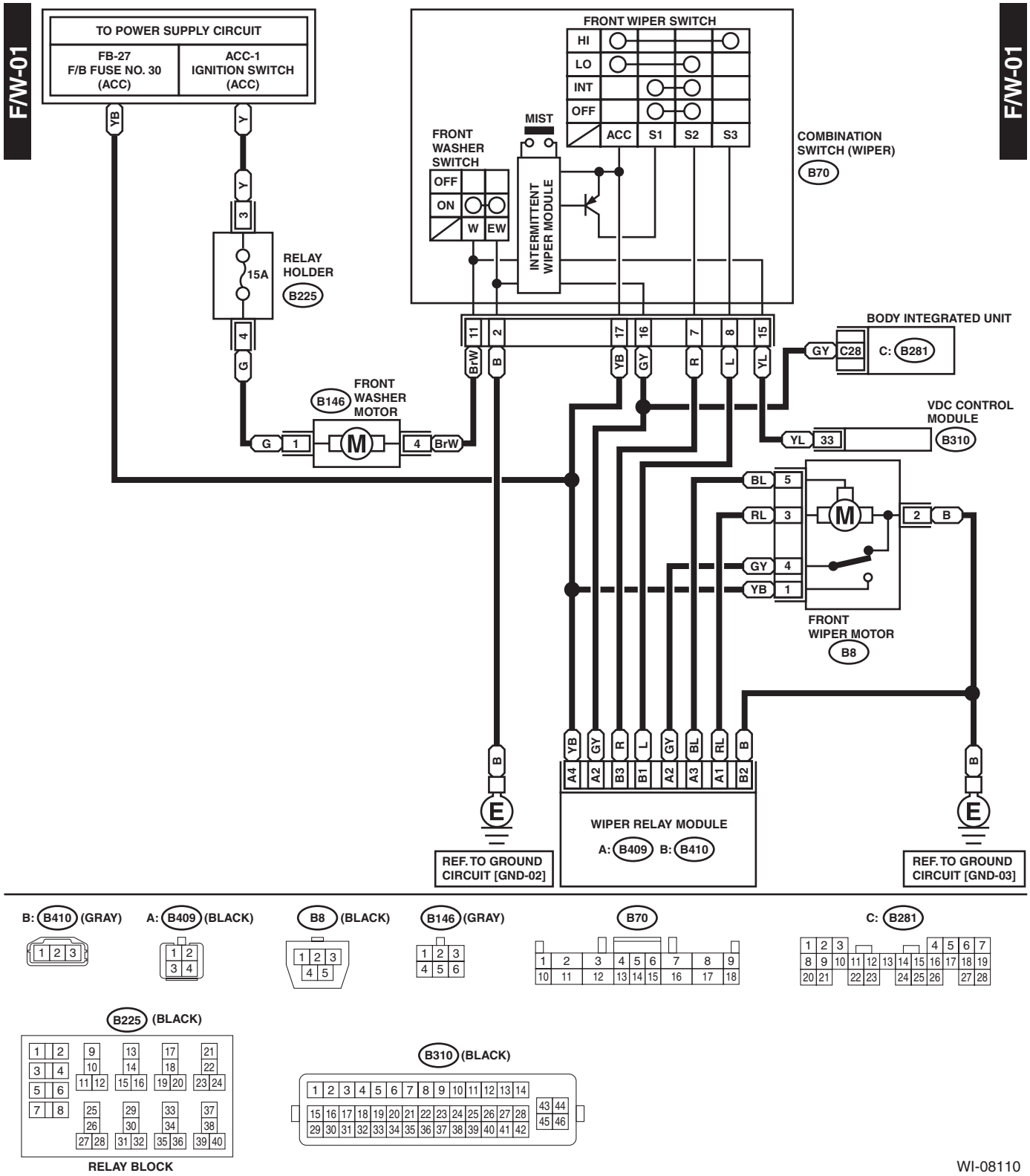
A: WIRING DIAGRAM