8. Stop the engine and wait until the coolant cools down (122 to 140°F [50 to 60 °C]). If there is any loss of coolant, add coolant to the radiator's filler neck and to the reserve tank's "Full" level.
9. Put the radiator cap and reservoir cap back on and tighten firmly.

Air cleaner element

⚠ WARNING
Do not operate the engine with the air cleaner element removed. The air cleaner element not only filters intake air but also stops flames if the engine backfires. If the air cleaner element is not installed when the engine backfires, you could be burned.

The air cleaner element functions as a filter screen. When the element is perforated or removed, engine wear will be excessive and engine life shortened.

The air cleaner element is a viscous type. It is unnecessary to clean or wash the element.

■ Replacing the air cleaner element

Replace the air cleaner element according to the maintenance schedule in the warranty and maintenance booklet. Under extremely dusty conditions, replace it more frequently. It is recommended that you always use genuine SUBARU parts.

– CONTINUED –

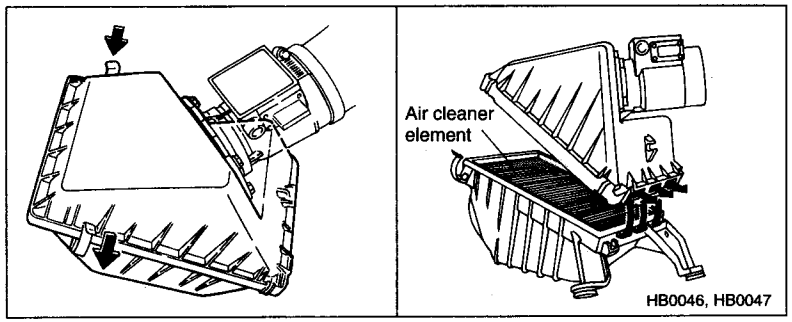

1. Unsnap the two clamps holding the air cleaner case cover.
2. Open the air cleaner case cover and remove the air cleaner element.
3. Clean the inside of the air cleaner cover and case with a damp cloth and install a new air cleaner element.
4. To install the air cleaner case cover, insert three projections on the air cleaner case into the slits on the cleaner case cover and then snap the two clamps on the air cleaner case cover.