Engine, transmission, and differential gear oil leaks

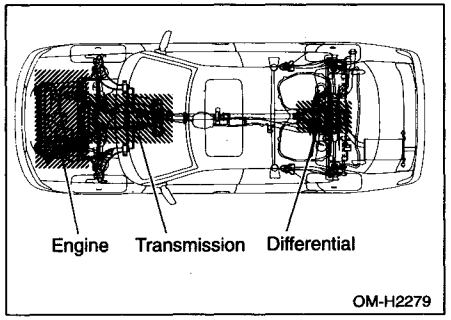

Inspect the following for oil leaks:

- Oil pan mating area
- Oil filter mating area
- Mating area between the engine and transmission
- Around the rear differential case cover (AWD vehicles only)
- Each drain plug and filler plug

If you find any leaks, contact your SUBARU dealer.