Manual transmission oil

■ Checking the oil level

Check the oil level monthly.

1. Park the vehicle on a level surface and stop the engine.

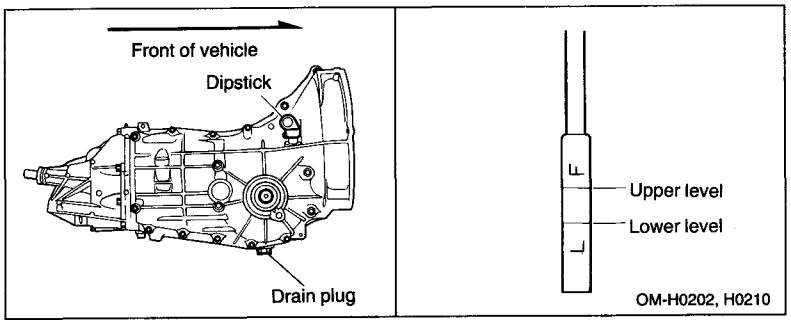

2. Pull out the dipstick, wipe it clean, and insert it again.
3. Pull out the dipstick again and check the oil level on it. If it is below the lower level, add oil through the dipstick hole to bring the level up to the upper level.

■ Recommended grade and viscosity

Each oil manufacturer has its own base oils and additives. Never use different brands together.

Oil grade: API classification GL-5

– CONTINUED –

SAE viscosity No. and Applicable Temperature

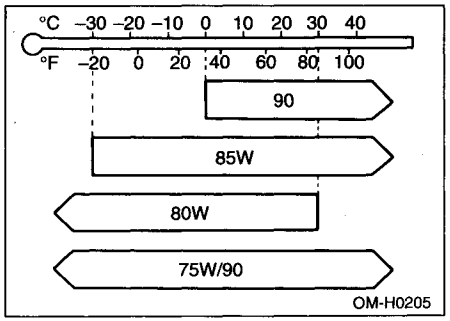

Automatic transmission fluid

The automatic transmission fluid expands largely as its temperature rises; the fluid level differs according to fluid temperature. Therefore, there are two different scales for checking the level of hot fluid and cold fluid on each side of the dipstick.

Though the fluid level can be checked without warming up the fluid on the "COLD" side, we recommend checking the fluid level when the fluid is operating temperature.

■ Checking the fluid level when the fluid is hot

Check the fluid level monthly.

1. Drive the vehicle several miles to raise the temperature of the transmission fluid up to normal operating temperature; 140 to 176°F (60 to 80 °C) is normal.
2. Park the vehicle on a level surface and set the parking brake.
3. First shift the selector lever in each position. Then shift it in the "P" position, and run the engine at idling speed.