■ To remove the cover housing

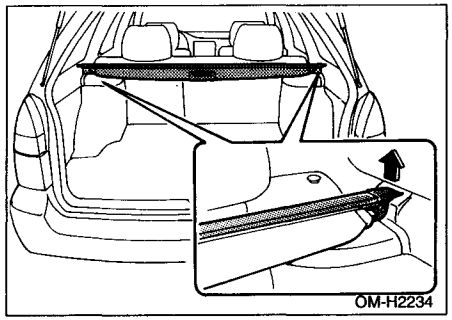

1. Rewind the cover.
2. To take it off the retainer, lift it out.
3. Store the cover housing in the luggage area.

■ To install the cover housing

Insert the both ends of the cover housing into the retainers.

Cargo anchorage eyelets (OUTBACK)

⚠ CAUTION

The cargo anchorage eyelets are designed only for securing light luggage. Never try to secure any luggage which weighs more than the load capacity of the anchorage eyelets. The maximum load capacity is about 44 lb. (20 kg) per eyelet.

– CONTINUED –

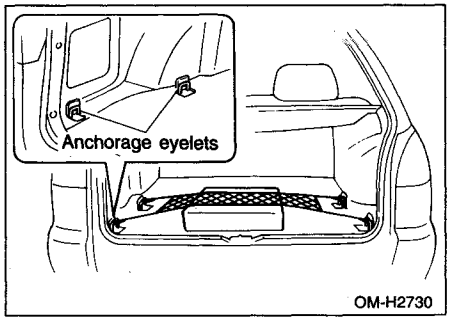

The luggage compartment is equipped with four anchorage eyelets so that luggage can be secured with a luggage net or ropes.

When using the anchorage eyelets, raise them up from under the cutouts of the luggage compartment mat. When not in use, put the eyelets down into the storing recesses.

Storage tray (Wagon — if equipped)

⚠ CAUTION
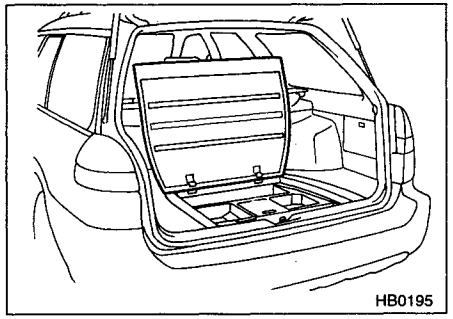
Do not store spray cans, containers with flammable or corrosive liquids or any other dangerous items in the storage tray.