Instrument panel overview

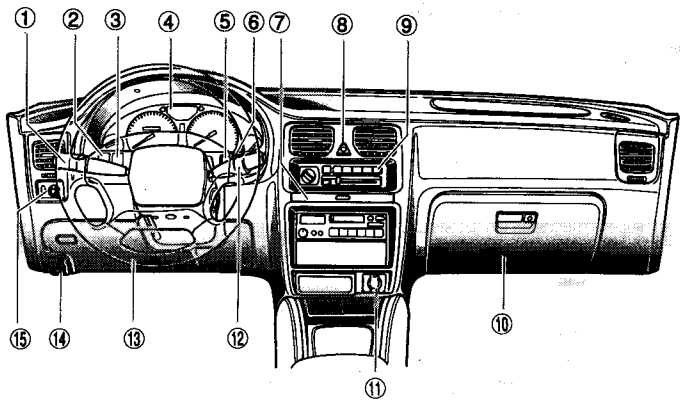

HB0021

① Lighting, turn signal and illumination brightness control switch (page 3-12)
② TCS OFF switch (page 7-37) (TCS OFF indicator light [Page 7-37]) or Security system indicator light (Page 1-8)
③ Fog light switch (page 3-16)
④ Combination meter (page 3-4)
⑤ Rear window defogger switch (page 3-22)
⑥ Cruise control main switch (page 7-26)
⑦ Cup holder (page 6-5)
⑧ Hazard warning flasher (page 3-12)
⑨ Heater or air conditioner control (page 4-3)
⑩ Glove compartment (page 6-3)
⑪ Accessory socket (page 6-7)
⑫ Windshield wiper and washer switch (page 3-19)
⑬ Steering (page 7-25)
⑭ Hood lock release (page 1-22)
⑮ Remote control mirror switch (page 3-24)

Instrument panel overview (Right hand drive vehicles)

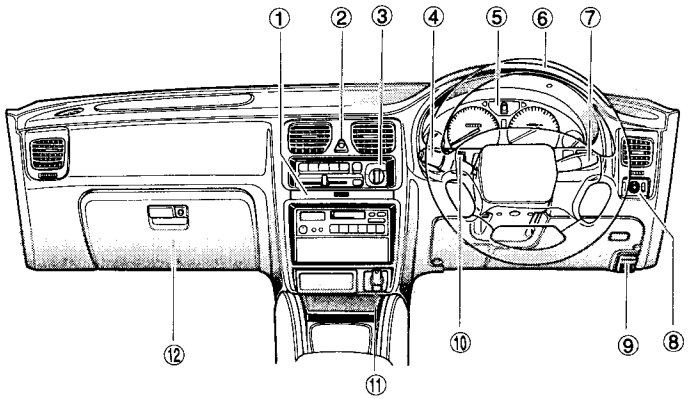

HB0068

① Cup holder (page 6-5)
② Hazard warning flasher (page 3-12)
③ Heater or air conditioner control (page 4-16)
④ Lighting, turn signal and illumination brightness control switch (page 3-12)
⑤ Combination meter (page 3-4)
⑥ Steering (page 7-25)
⑦ Windshield wiper and washer switch (page 3-19)
⑧ Remote control mirror switch (page 3-24)
⑨ Hood lock release (page 1-22)
⑩ Rear window defogger switch (page 3-22)
⑪ Accessory socket (page 6-7)
⑫ Glove compartment (page 6-3)