■ FM reception

Although FM is normally static free, reception can be affected by the surrounding area, atmospheric conditions, station strength and transmitter distance. Buildings or other obstructions may cause momentary static, flutter or station interference. If reception continues to be unsatisfactory, switch to a stronger station.

AM/FM stereo radio with cassette player (if equipped)

The radio will operate only when the ignition switch is in the "ACC" or "ON" positions.

RADIO OPERATION (for radio with weather band)

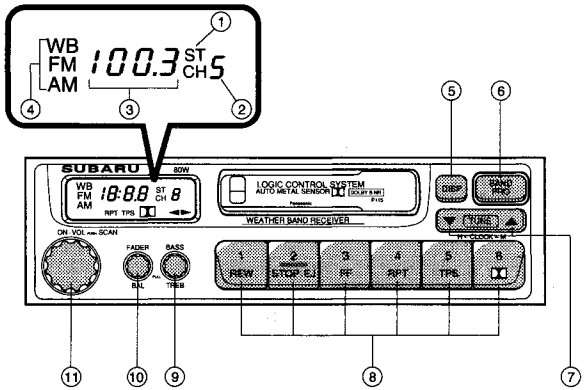

HB0065

① Stereo indicator
② Preset station number
③ Frequency
④ Band
⑤ DISP button
⑥ Band selection switch
⑦ Turning button
⑧ Preset button
⑨ Bass and treble control knob
⑩ Fader and balance control knob
⑪ Power switch, volume control and SCAN button

– CONTINUED –

■ Weather band (WB)

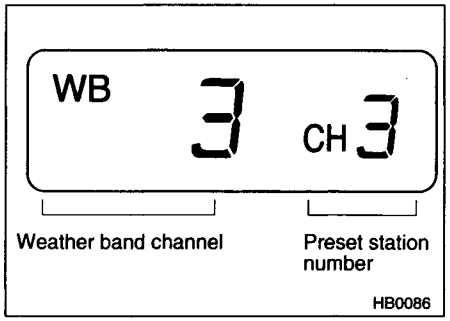

The radio can receive following seven stations of weather band (WB).

WB channel	Station
WB1 :	162.550 MHz
WB2 :	162.400 MHz
WB3 :	162.475 MHz
WB4 :	162.425 MHz
WB5 :	162.450 MHz
WB6 :	162.500 MHz
WB7 :	162.525 MHz

■ Power switch and volume control (ON · VOL)

The same knob is used for both power (on/off) and volume control. The radio is turned on and off by turning the knob clockwise or counterclockwise and the volume is controlled by turning the knob.

■ Fader and balance control (FADER and BAL)

The same knob is used for both fader control and balance control.

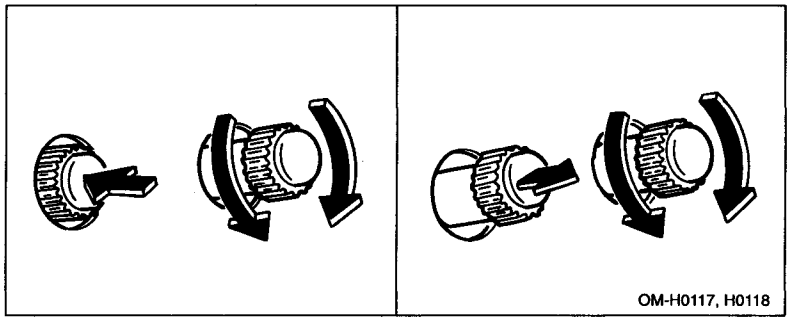

▼ Fader

The fader control adjusts the balance between the front and rear speakers.

Push the knob once to make it pop out. The balance is adjusted by turning the knob from left to right in this condition. A click while turning the knob indicates the center position. After making the desired adjustment, push the knob in again to store the setting.

▼ Balance

The balance control adjusts the balance between the left and right speakers.

Push the knob once to make it pop out, then pull the knob out until it stops. The balance is adjusted by turning the knob from left to right in this condition. A click while turning the knob indicates the center position. After adjusting the balance, push the knob in again to store the setting.

■ Bass and treble control (BASS and TREB)

Bass and treble control is done on same knob. Use that knob for the separate adjustment of low pitch and high pitch sounds.

▼ Bass

The bass control adjusts the level of low pitch sounds.

Push the knob once to make it pop out. The bass is adjusted by turning the knob from left to right in this condition. A click while turning the knob indicates the center position. After adjusting the bass, push the knob in again to store the setting.

– CONTINUED –

▼ Treble

The treble control adjusts the level of high pitch sounds.
Push the knob once and it will pop out, then pull the knob out until it stops. The treble is adjusted by turning the knob from left to right in this condition. A click while turning the knob indicates the center position. After adjusting the treble, push the knob in again to store the setting.

■ Band selection switch (BAND)

Push the band selection switch to select either FM, AM or Weather Band (WB) reception. Each time this button is pressed, the band will change in the following order.

FM → AM → WB

The display indicates which is currently selected.

■ Stereo indicator

The stereo indicator "ST" will come on when an FM stereo broadcast is received.

■ Manual tuning (TUNE)

▼ Manual tuning for FM and AM

Press the tuning button marked "▲" to increase the tuning frequency and press the tuning button marked " ▼ " to decrease it. Each time the button is pressed, the frequency changes 10 KHz in the AM mode and 0.2 MHz in the FM mode. Constant pressure on the button causes a continuous change in the frequency.

▼ Manual tuning for WB

When WB mode is selected, press the tuning button marked "▲" to change the WB channel up and press the tuning button marked " ▼ " to change the WB channel down. Each time the button is pressed, the WB channel changes next channel. Constant pressure on the button causes a continuous change in the frequency.

■ Automatic tuning (SCAN)

Press the volume control knob to change the radio to the SCAN mode. In this mode, the radio scans through the radio band until a station is found. The radio will stop at the station for five seconds while displaying the frequency, after which scanning will continue until the entire band has been scanned from the low end to the high end. Press the volume control knob again to cancel the SCAN mode and to stop on any displayed frequency.

■ Selecting preset stations

Presetting a station with a preset button allows you to select that station in a single operation. Up to six AM, FM and WB stations each may be preset.

■ How to preset stations

1. Press the band selection switch to select either FM, AM or WB reception.
2. Press the volume control knob or tune the radio manually until the desired station frequency is displayed.
3. Press one of the preset buttons for at least two seconds to store the frequency. The frequency of the station will flash once on the display at this time. If the button is pressed for less than two seconds, the preceding selection will remain in memory.

When the volume control knob is pressed for automatic tuning, stations are scanned in the direction of low frequencies to high frequencies only. Automatic tuning may not function properly if the station reception is weakened by distance from the station or proximity to tall buildings and hills.

NOTE

If the connection between the radio and battery is broken for any reason such as vehicle maintenance or radio removal, all stations stored in the preset buttons are cleared. If this occurs, it is necessary to reset the preset buttons.

– CONTINUED –

RADIO OPERATION (for radio without weather band)

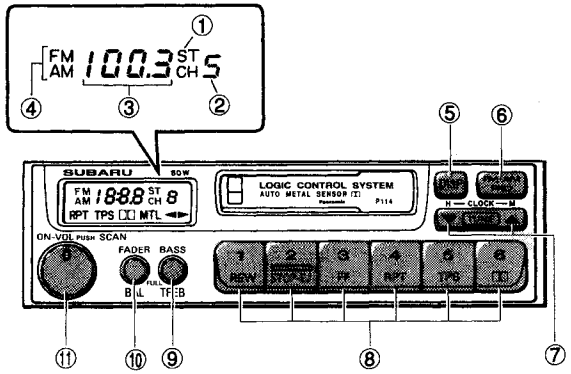

OM-H2432

① Stereo indicator
② Preset station number
③ Frequency
④ Band
⑤ DISP button
⑥ FM/AM selection switch
⑦ Turning button
⑧ Preset button
⑨ Bass and treble control knob
⑩ Fader and balance control knob
⑪ Power switch, volume control and SCAN button

■ Power switch and volume control (ON · VOL)

The same knob is used for both power (on/off) and volume control. The radio is turned on and off by turning the knob clockwise or counterclockwise and the volume is controlled by turning the knob.

■ Fader and balance control (FADER and BAL)

The same knob is used for both fader control and balance control.

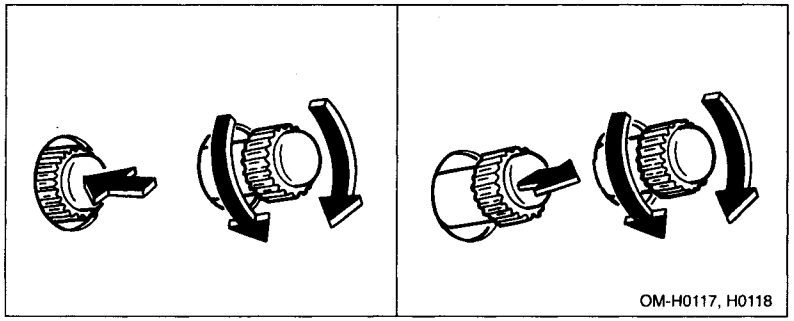

▼ Fader

The fader control adjusts the balance between the front and rear speakers.

Push the knob once to make it pop out. The balance is adjusted by turning the knob from left to right in this condition. A click while turning the knob indicates the center position. After making the desired adjustment, push the knob in again to store the setting.

▼ Balance

The balance control adjusts the balance between the left and right speakers.

Push the knob once to make it pop out, then pull the knob out until it stops. The balance is adjusted by turning the knob from left to right in this condition. A click while turning the knob indicates the center position. After adjusting the balance, push the knob in again to store the setting.

■ Bass and treble control (BASS and TREB)

Bass and treble control is done on same knob. Use that knob for the separate adjustment of low pitch and high pitch sounds.

▼ Bass

The bass control adjusts the level of low pitch sounds.

Push the knob once to make it pop out. The bass is adjusted by turning the knob from left to right in this condition. A click while turning the

– CONTINUED –

knob indicates the center position. After adjusting the bass, push the knob in again to store the setting.

▼ Treble

The treble control adjusts the level of high pitch sounds.
Push the knob once and it will pop out, then pull the knob out until it stops. The treble is adjusted by turning the knob from left to right in this condition. A click while turning the knob indicates the center position. After adjusting the treble, push the knob in again to store the setting.

■ FM/AM selection switch (FM · AM)

Use this switch to select either FM or AM reception. The display indicates which is currently selected.

■ Stereo indicator

The stereo indicator "ST" will come on when an FM stereo broadcast is received.

■ Manual tuning (TUNE)

Press the tuning button marked "▲" to increase the tuning frequency and press the tuning button marked " ▼ " to decrease it. Each time the button is pressed, the frequency changes 10 KHz in the AM mode and 0.2 MHz in the FM mode. Constant pressure on the button causes a continuous change in the frequency.

■ Automatic tuning (SCAN)

Press the volume control knob to change the radio to the SCAN mode. In this mode, the radio scans through the radio band until a station is found. The radio will stop at the station for five seconds while displaying the frequency, after which scanning will continue until the entire band has been scanned from the low end to the high end. Press the volume control knob again to cancel the SCAN mode and to stop on any displayed frequency.

■ Selecting preset stations

Presetting a station with a preset button allows you to select that station in a single operation. Up to six AM and FM stations each may be preset.

■ How to preset stations

1. Press the FM/AM selection switch to select either FM or AM reception.
2. Press the volume control knob or tune the radio manually until the desired station frequency is displayed.
3. Press one of the preset buttons for at least two seconds to store the frequency. The frequency of the station will flash once on the display at this time. If the button is pressed for less than two seconds, the preceding selection will remain in memory.

When the volume control knob is pressed for automatic tuning, stations are scanned in the direction of low frequencies to high frequencies only. Automatic tuning may not function properly if the station reception is weakened by distance from the station or proximity to tall buildings and hills.

NOTE

If the connection between the radio and battery is broken for any reason such as vehicle maintenance or radio removal, all stations stored in the preset buttons are cleared. If this occurs, it is necessary to reset the preset buttons.

– CONTINUED –

CASSETTE PLAYER OPERATION

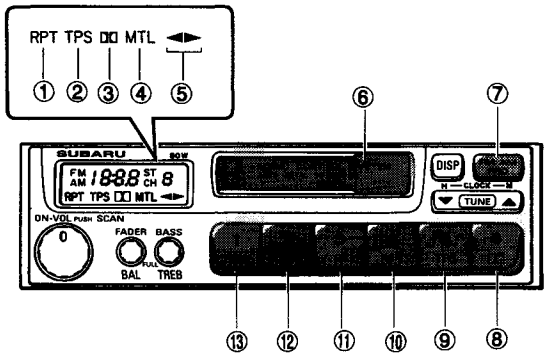

OM-H2433

① Repeat indicator
② TPS indicator
③ Dolby NR indicator
④ Metal tape indicator (if equipped)
⑤ Tape travel indicator
⑥ Cassette slot
⑦ Program switching button
⑧ Dolby NR button
⑨ Tape program sensor button
⑩ Repeat button
⑪ Fast forward button
⑫ Stop and eject button
⑬ Rewind button

■ Cassette slot

When a cassette is partially inserted, it is automatically drawn in and starts tape playback.

■ Tape travel indicators

These indicate the direction the cassette tape is moving.

▶ indicates that the top side of the cassette is being played back.

◀ indicates that the bottom side of the cassette is being played back.

■ Program switching button (PROG)

When the program switching button is pressed during playback, the tape travel indicators will switch and the player will begin playing back the opposite side of the tape. The same mechanism is automatically activated when the end of the tape is reached. This allows the opposite side of the tape to play, providing continuous playback.

■ Fast-forward button (FF)

To fast-forward the tape, press the "FF" button. To stop fast-forwarding, press the "STOP/EJ" button.

■ Rewind button (REW)

To rewind the tape, press the "REW" button. To stop rewinding, press the "STOP/EJ" button.

■ Stop and eject button (STOP/EJ)

When the "STOP/EJ" button is pressed, playback stops and the cassette tape is ejected.
The ejection function also operates when the ignition switch is turned off. Always make certain that you remove the cassette tape.

■ Tape program sensor button (TPS)

Press the "TPS" button during playback to return to the beginning of the current selection or to skip to the beginning of the next selection. To use this function, press the "TPS" button to turn on the "TPS" indicator. If the fast-forward button (FF) is then pressed, the player advances the tape to the beginning of the next selection and starts playing it. If the rewind button (REW) is pressed instead, the player rewinds the tape to the beginning of the current selection and starts replaying it. The "TPS" function may not operate properly under the following conditions:

- When the recording level is low.
- When there are long pauses in the middle of a selection.
- When the tape contains verbal material such as conversations.
- When the blanks between selections are shorter than five seconds.
- When there are no blanks between selections (live concerts, etc.).

– CONTINUED –

■ Repeat button (RPT)

Push the "RPT" button to repeat the piece of music being listened to. To use this function, push the "RPT" button while the piece you want to hear again is being played. "RPT" will be indicated on the display. When the selection ends, the cassette player automatically rewinds to the beginning of the piece and the selection begins again. To cancel the repeat function, push the "RPT" button again. Until the repeat function is cancelled, the same piece of music will be repeated indefinitely. The "RPT" function may not operate properly under the following conditions:

- When the recording level is low.
- When there are long pauses in the middle of a selection.
- When the tape contains verbal material such as conversations.
- When the blanks between selections are shorter than five seconds.
- When there are no blanks between selections (live concerts, etc).

■ Dolby NR button (DD)

Press the "DD" button when playing tapes recorded using the Dolby NR system*. The "DD" indicator will light up and high-frequency noise on the tape will be reduced for clearer sound reproduction.

* Noise reduction system manufactured under license from Dolby Laboratories Licensing Corporation. "Dolby" and double-D Symbol are trade marks of Dolby Laboratories Licensing Corporation.

■ Auto metal sensor

The cassette player automatically adjusts for metal or CrO_2 tape.

■ Metal tape indicator (MTL) (if equipped)

If metal or CrO_2 tape has been inserted into the cassette slot, "MTL" will be indicated on the display.

CLOCK FUNCTION

The radio has a built-in clock function that displays the time when the ignition switch is turned either to "ACC" or "ON".

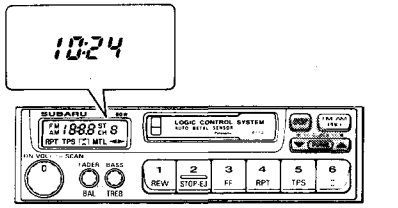

OM-H2434

■ When turning on the radio

When the radio is switched on or the station is changed, the time display is replaced by the frequency display. However, after the frequency has been displayed for five seconds, it is replaced by the time display again.

If you wish to see the time while the frequency is being displayed, press the "DISP" button and the frequency display will be replaced with the time display.

■ Setting the time

To set the time, turn the ignition switch to "ACC" or "ON". Press the "DISP" button and the "H" button together to advance the hours in one-hour increments. Press the "DISP" button and the "M" button together to advance the minutes in one-minute increments.

NOTE

If the connection between the radio and battery is broken for any reason such as vehicle maintenance or radio removal, the time setting will be cleared. If this occurs, it is necessary to reset the time.