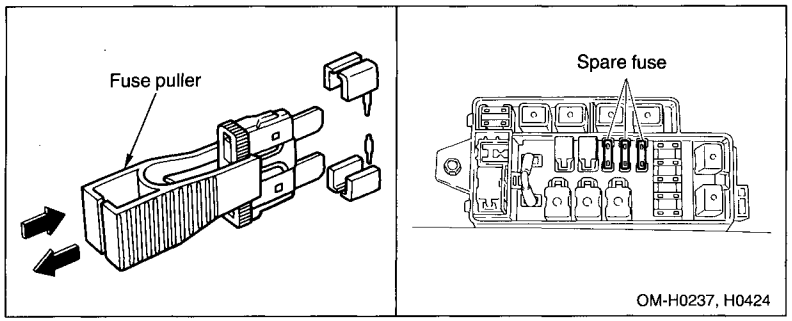

4. Pull out the fuse with the fuse puller provided in the interior fuse box cover.
5. Inspect the fuse. If it has blown, replace it with a spare fuse of the same rating. The spare fuses are stored in the main fuse box in engine compartment.
6. If the same fuse blows again, this indicates that its system has a problem. Contact your SUBARU dealer for repair.

Main fuse and fusible link

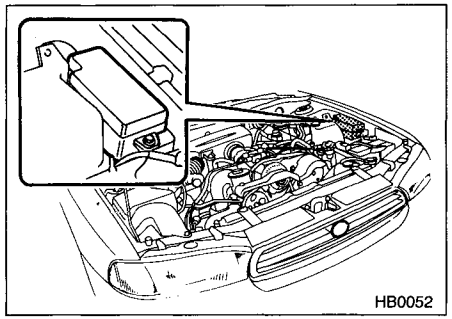

The main fuses and fusible link are designed to melt during an overload to prevent damage to the wiring harness and electrical equipment. Check the main fuses and fusible link if any electrical component fails to

– CONTINUED –

operate (except the starter motor) and other fuses are good. A melted main fuse or fusible link must be replaced. Use only replacements with the same specified rating as the melted main fuse or fusible link. If a main fuse or fusible link blows after it is replaced, have the electrical system checked by your nearest SUBARU dealer.

Installation of accessories

Always consult your SUBARU dealer before installing fog lights or any other electrical equipment in your vehicle. Such accessories may cause the electronic system to malfunction if they are incorrectly installed or if they are not suited for the vehicle.

Checking the headlight aim

Before checking the headlight aim:

1. Set the light switch to the OFF position. Be sure that the area around the headlights has not sustained any accident damage or other type of deformation.
2. Park the vehicle on level ground and remove any heavy objects from the cargo area of the vehicle.
3. Check the tires for correct inflation pressure.
4. Make certain that the vehicle's gas tank is full and that someone is seated in the driver's seat.
5. Bounce the vehicle several times to normalize the suspension.

■ To check the headlight aim

To check the headlight aim, check the vertical and horizontal gauges on the back of head lights.