Engine oil

■ Checking the oil level

Check the engine oil level at each fuel stop.

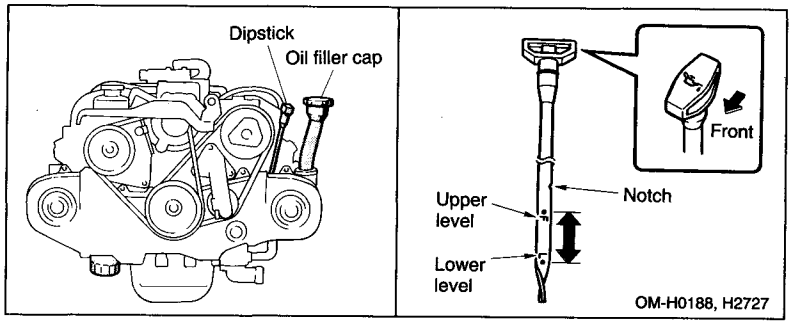

1. Park the vehicle on a level surface and stop the engine.
2. Pull out the dipstick, wipe it clean, and insert it again.
3. Be sure the dipstick is correctly inserted until it stops with the graphic symbol on its top appearing as shown in the illustration.
4. Pull out the dipstick again and check the oil level on it. If it is below the lower level, add oil to bring the level up to the upper level.

> **⚠ CAUTION**
> **Use only engine oil with the recommended grade and viscosity.**

If you check the oil level just after stopping the engine, wait a few minutes for the oil to drain back into the oil pan before checking the level.

Just after driving or while the engine is warm, the engine oil level reading may be in a range between the upper level and the notch mark. This is caused by thermal expansion of the engine oil.

To prevent overfilling the engine oil, do not add any additional oil above the upper level when the engine is cold.

– CONTINUED –

■ Changing the oil and oil filter

Change the oil and oil filter according to the maintenance schedule in the warranty and maintenance booklet.

The engine oil and oil filter must be changed more frequently than listed in the maintenance schedule when driving on dusty roads, when short trips are frequently made when towing a trailer, or when driving in extremely cold whether.

1. Warm up the engine by letting the engine idle for about 10 minutes to ease draining the engine oil.
2. Park the vehicle on a level surface and stop the engine.
3. Remove the oil filler cap.

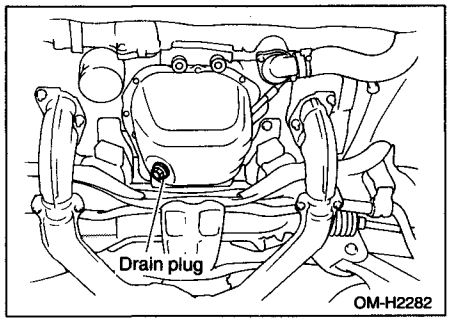

4. Drain out the engine oil by removing the drain plug while the engine is still warm. The used oil should be drained into an appropriate container and disposed of properly.

⚠ WARNING
Be careful not to burn yourself with hot engine oil.

5. Wipe the seating surface of the drain plug with a clean cloth and tighten it securely with a new sealing washer after the oil has completely drained out.

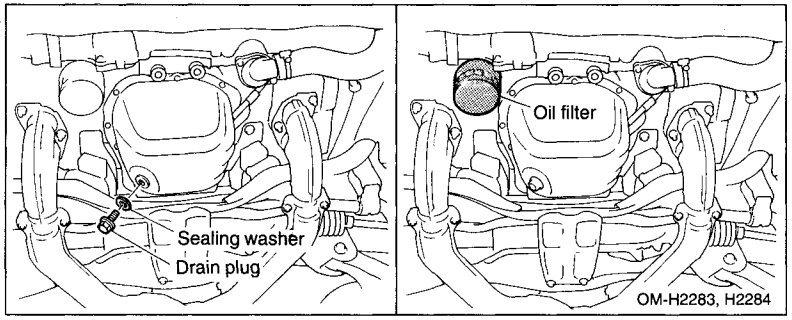

6. Remove the oil filter with an oil filter wrench.
7. Before installing a new oil filter, apply a thin coat of engine oil to the seal.
8. Clean the rubber seal seating area of the lower crank case and install the oil filter by hand turning. Be careful not to twist or damage the seal.
9. Tighten it approximately two-thirds of a turn after the seal makes contact with underside of the crank case.

⚠ CAUTION
Never over tighten the oil filter because that can result in an oil leak.

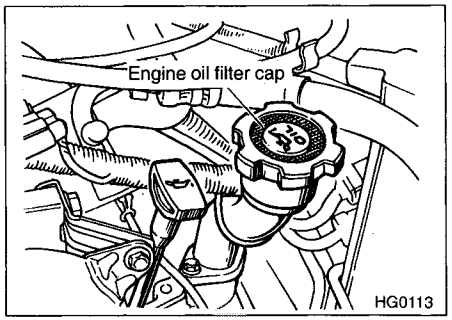

10. Pour the specified amount of engine oil through the filler neck.

– CONTINUED –

Oil capacity
2.2 Liter models: 4.2 US qt (4.0 liters, 3.5 Imp qt)
2.5 Liter models: 4.8 US qt (4.5 liters, 4.0 Imp qt)

11. Start the engine and make sure that no oil leaks appear around the filter's rubber seal.
12. Run the engine until it reaches the normal operating temperature. Then stop the engine and wait a few minutes to allow the oil drain back. Check the oil level again and if necessary, add more engine oil.

■ Recommended grade and viscosity

⚠ CAUTION
Use only engine oil with the recommended grade and viscosity.

Oil grade: API classification SH or SG with the words "ENERGY CONSERVING II" or the ILSAC (International Lubricant Standardization and Approval Committee) certification mark displayed on the container.

API Service label

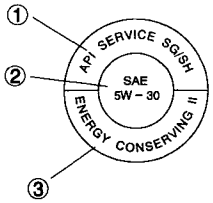

ILSAC Certification Mark

① Indicates the oil quality by API designations
② Indicates the SAE oil viscosity grade
③ Indicates that the oil has fuel saving capabilities

In choosing an oil, you want the proper quality and viscosity, as well as one that will add to fuel economy. The following table lists the recom-

mended viscosities and applicable temperatures.
When adding oil, different brands may be used together as long as they are the same API classification and SAE viscosity as those recommended by SUBARU.

Engine oil viscosity (thickness) affects fuel economy. Oils of lower viscosity provide better fuel economy. However, in hot weather, oil of higher viscosity is required to properly lubricate the engine.

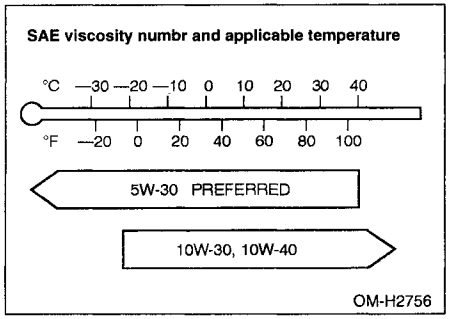

■ Recommended grade and viscosity under severe driving conditions

If the vehicle is used in desert areas, in areas with very high temperatures, or used for heavy-duty applications such as a towing a trailer, use of oil with the following grade and viscosities is recommended.

API classification SH:
SAE viscosity No.: 30, 40, 10W-50, 20W-40, 20W-50