Rear seats

⚠ WARNING

- **Never allow passengers to ride on the folded rear seatback, in the trunk or in the cargo area. Doing so may result in serious injury.**
- **Never stack luggage or other cargo higher than the top of the seatback because it could tumble forward and injure passengers in the event of a sudden stop or accident.**
- **Secure skis and other lengthy items properly to prevent them from shooting forward and causing serious injury during a sudden stop.**

■ Fold down rear seat — Sedan

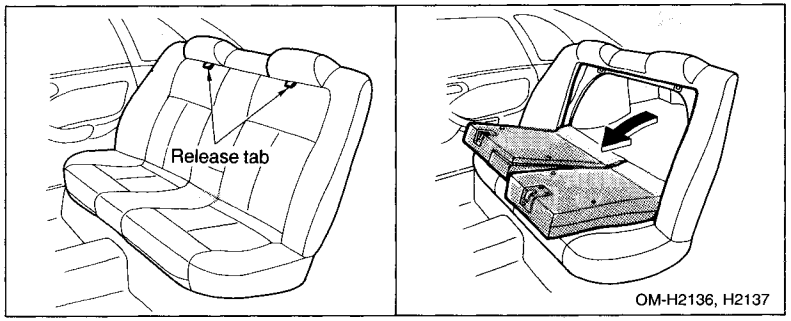

OM-H2136, H2137

To fold the seatback down, pull the release tab attached to the top of the seatback. To restore it, push the seatback up to its original position until it locks. Be sure to confirm that it is locked in place.

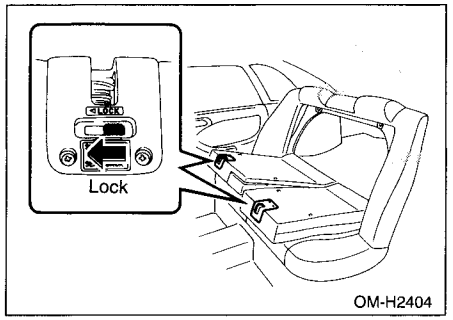

To cancel the fold down function, slide the lock knob located on the backside of the seatback to the "LOCK" position and close the seatback.

▼ Armrest (if equipped)

⚠ WARNING

To avoid the possibility of serious injury, passengers must never be allowed to sit on the center armrest while the vehicle is in motion.

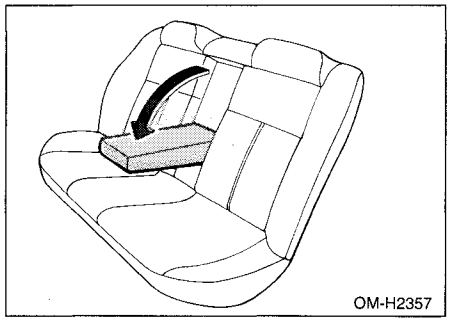

To lower the armrest, pull on the top edge of the armrest.

– CONTINUED –

■ Fold down rear seat — Wagon

⚠ WARNING

After returning the rear seat to its original position, be certain to place all of the seat belts and the tab attached to the seat cushion above the seat cushion. And make certain that the shoulder belts are fully visible.

▼ Folding down the seatback

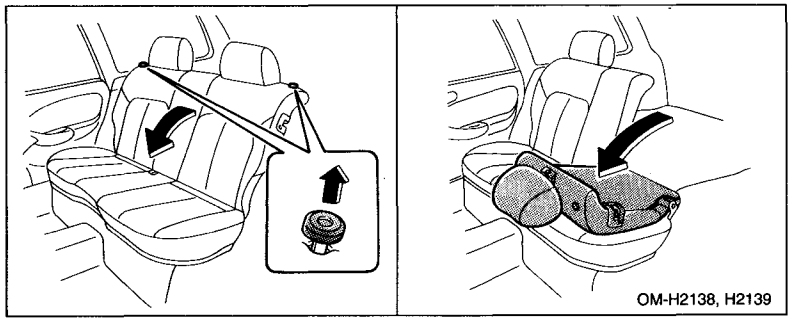

Unlock the seatback by pulling the release knob and fold it down.

▼ Folding down the seat cushion and seatback

1. Move the front seat forward.
2. (If your vehicles' rear seatbacks are equipped with head restraints.) To remove the head restraint, pull the head restraint up while pushing the release button located on the backside of the set-back.

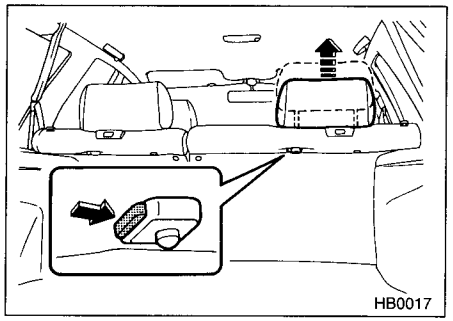

3. Store the seat belts in the seat belt pocket to prevent them falling below the cushion.

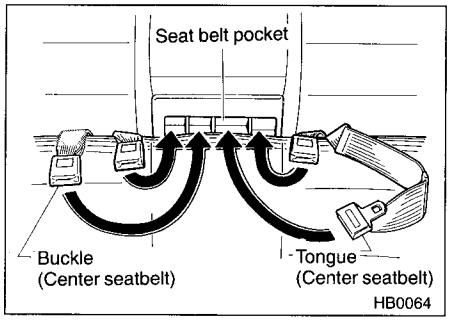

4. Raise the seat cushion by pulling up the tab.

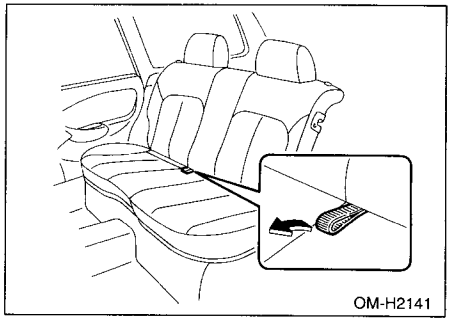

– CONTINUED –

5. Unlock the seatback by pulling the release knob and fold it down. Confirm that the pin located at the bottom of the seat cushion is inserted into the slot at the top of the seatback.

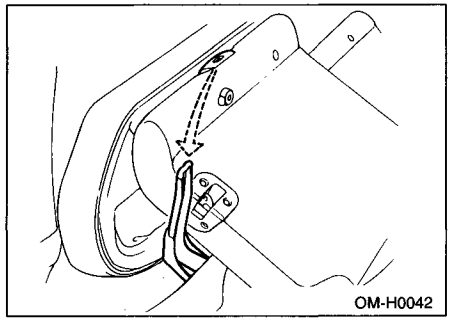

6. Install the head restraints onto the backside of the seatback.

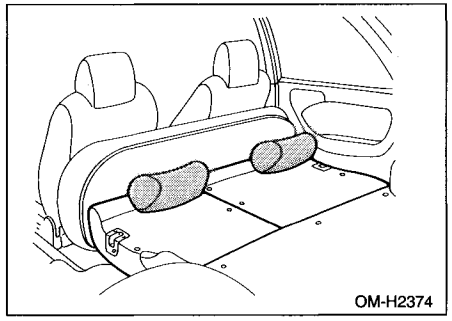

To return the rear seat to its original position, raise the seatback and seat cushion until it locks into place and make sure that they are securely locked.
Make sure that the rear seat belts are not under the seat cushion or seatback.
Place the head restraints (if so equipped) back in their normal position.