SAE viscosity No. and Applicable Temperature

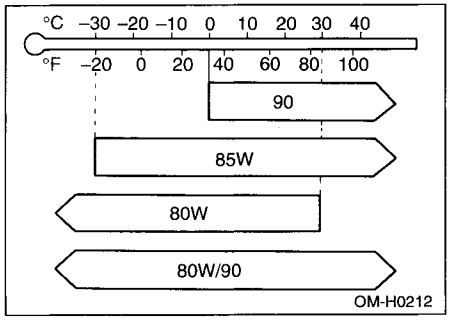

Rear differential gear oil (AWD vehicles)

■ Checking the oil level

⚠ CAUTION

If the vehicle requires frequent refilling, there may be an oil leak. If you suspect a problem, have the vehicle checked at your SUBARU dealer.

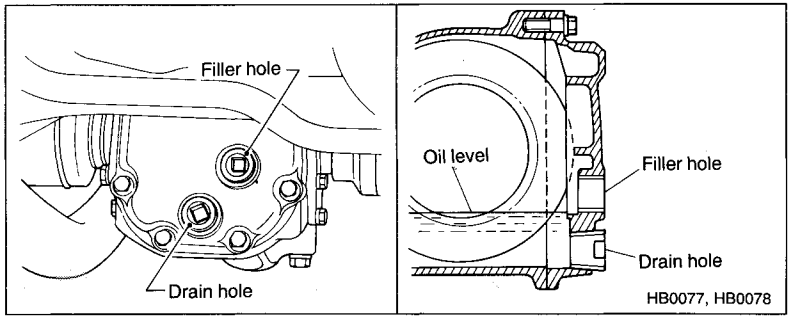

– CONTINUED –

Remove the plug from the filler hole and check the oil level. The oil level should be kept even with the bottom of the filler hole. If the oil level is below the bottom edge of the hole, add oil through the filler hole to raise the level.

■ Recommended grade and viscosity

Each oil manufacturer has its own base oils and additives. Never use different brands together.

Oil grade: API classification GL-5

SAE viscosity No. and Applicable Temperature

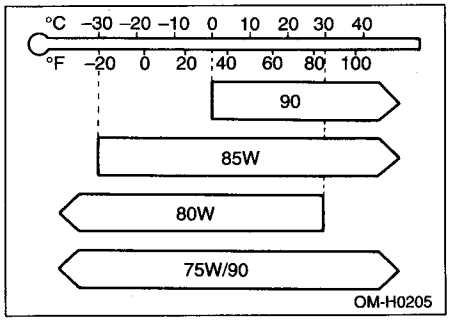

Power steering fluid

The power steering fluid expands largely as its temperature rises; the fluid level differs according to fluid temperature. Therefore, the dipstick has two different checking ranges for hot and cold fluids on it.

■ Checking the fluid level when the fluid is hot

⚠ WARNING
Be careful not to burn yourself because the fluid may be hot.