Front differential gear oil (Automatic transmission)

■ Checking the oil level

Check the differential oil level monthly.

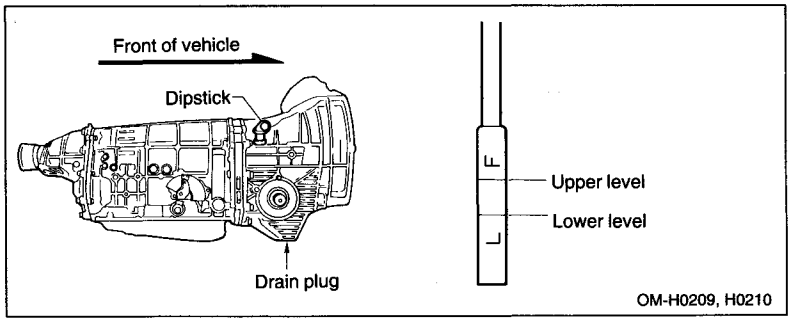

1. Park the vehicle on a level surface and stop the engine.
2. Pull out the dipstick, wipe it clean, and insert it again.
3. Pull out the dipstick again and check the oil level on it. If it is below the lower level, add oil to bring the level up to the upper level.

■ Recommended grade and viscosity

Each oil manufacturer has its own base oils and additives. Never use different brands together.

Oil grade: API classification GL-5

SAE viscosity No. and Applicable Temperature

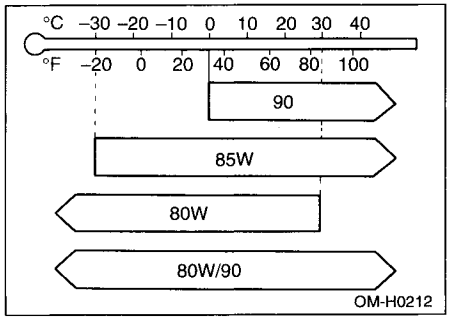

Rear differential gear oil (AWD vehicles)

■ Checking the oil level

⚠ CAUTION

If the vehicle requires frequent refilling, there may be an oil leak. If you suspect a problem, have the vehicle checked at your SUBARU dealer.

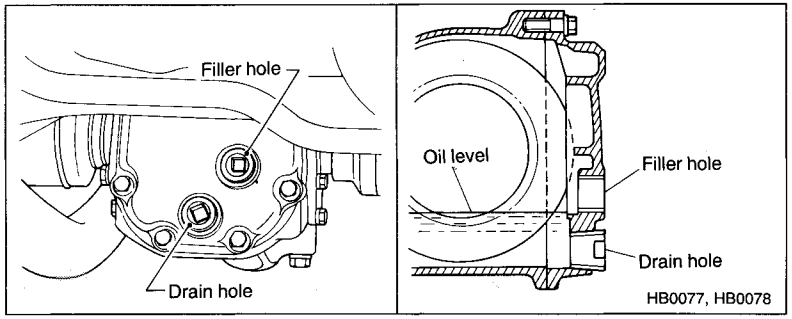

– CONTINUED –