Engine compartment overview

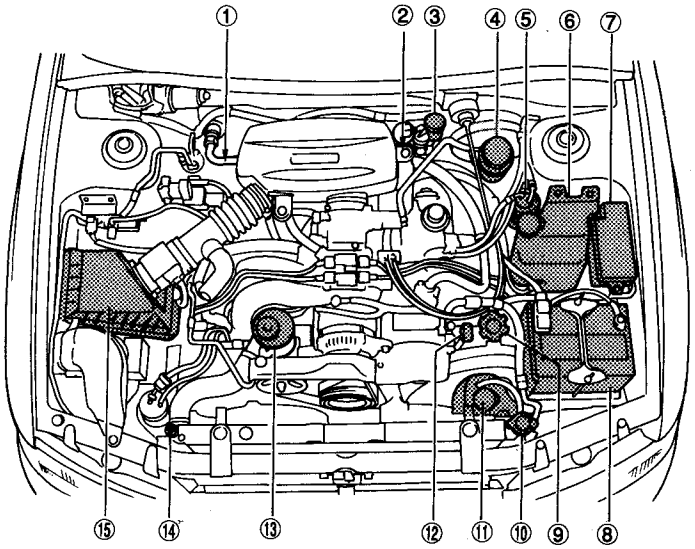

HB0040

① Manual transmission oil level gauge (MT) (page 10-21) or Differential gear oil level gauge (AT) (page 10-24)
② Automatic transmission fluid level gauge (page 10-23)
③ Clutch fluid reservoir (2.5L, MT) (page 10-29)
④ Brake fluid reservoir (page 10-28)
⑤ Fuel filter (page 10-32)
⑥ Windshield washer tank (page 10-32)
⑦ Fuse box (page 10-44)
⑧ Battery (page 10-31)
⑨ Engine oil filler cap (page 10-7)
⑩ Radiator cap (page 10-12)
⑪ Engine coolant reservoir (page 10-12)
⑫ Engine oil level gauge (page 10-7)
⑬ Power steering fluid reservoir (page 10-26)
⑭ Air vent plug (Page 10-12)
⑮ Air cleaner (page 10-17)