Flat tires

⚠ WARNING

- **Do not jack up the vehicle on an incline or a loose road surface. The jack can come out of the jacking point or sink into the ground and this can result in a severe accident.**
- **Use only the jack provided with your vehicle. The jack supplied with the vehicle is designed only for changing a tire. Never get under the vehicle while supporting the vehicle with this jack.**
- **Always turn the engine off before raising the flat tire off the ground using the jack. Never swing or push the vehicle supported with the jack. The jack can come out of the jacking point due to a jolt and this can result in a severe accident.**

If you have a flat tire while driving, never brake suddenly; keep driving straight ahead while gradually reducing speed. Then slowly pull off the road to a safe place.

■ Changing a flat tire

1. Park on a hard, level surface, whenever possible, then stop the engine.
2. Set the parking brake securely and shift a manual transmission vehicle in reverse or an automatic transmission vehicle in the "P" (Park) position.
3. Turn on the hazard warning flasher and have everyone get out of the vehicle.

4. Put wheel blocks at the front and rear of the tire diagonally opposite the flat tire.

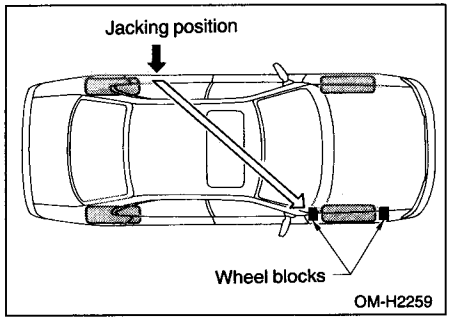

5. Take out the spare tire, jack, and wheel nut wrench. See Tire Changing Tools in this chapter.
6. (If your vehicle has wheel covers) Insert the wheel nut wrench into the notch provided in the wheel cover, and pry it off.

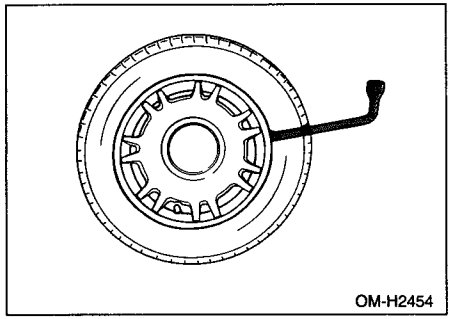

– CONTINUED –

7. Loosen the wheel nuts using the wheel nut wrench but do not remove the nuts.

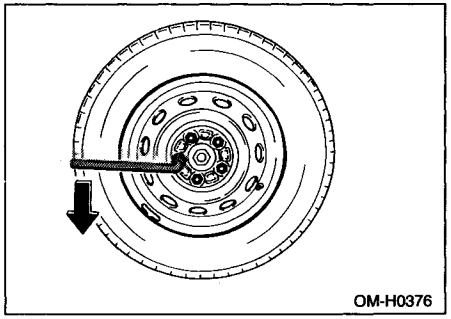

8. Place the jack under the side sill at the front or rear jack-up point closest to the flat tire.
Turn the jackscrew by hand until the jack head engages firmly into the jack-up point.

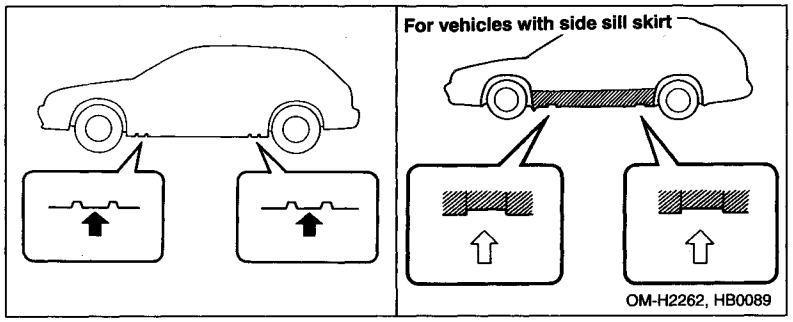

9. Insert the jack handle into the jackscrew, and turn the handle clockwise until the tire clears the ground.

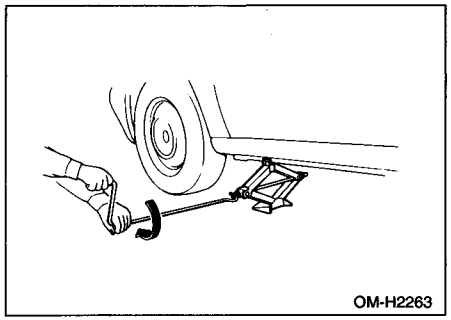
OM-H2263

10. Remove the wheel nuts and the flat tire.
11. Before putting the spare tire on, clean the mounting surface of the wheel and hub with a cloth.

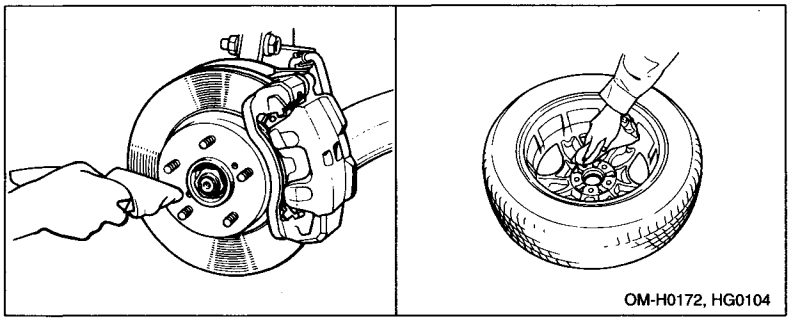
OM-H0172, HG0104

12. Put on the spare tire. Replace the wheel nuts. Tighten them by hand.
13. Turn the jack handle counterclockwise to lower the vehicle.

– CONTINUED –

14. Use the wheel nut wrench to securely tighten the wheel nuts to the specified torque, following the tightening order in the illustration.

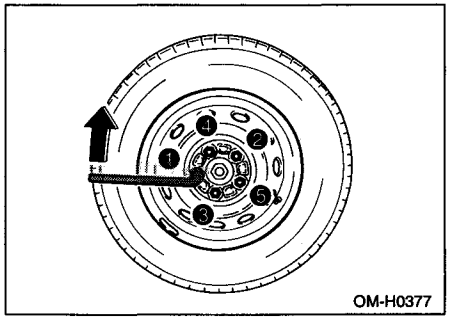

The torque for tightening the nuts is 58 to 72 ft-lb (78 to 98 N-m, 8 to 10 kg-m). This torque is equivalent to applying about 88 to 110 lbs (40 to 50 kg) at the top of the wheel nut wrench. Never use your foot on the wheel nut wrench or a pipe extension on the wrench because you may exceed the specified torque.

15. Store the flat tire in the spare tire compartment.

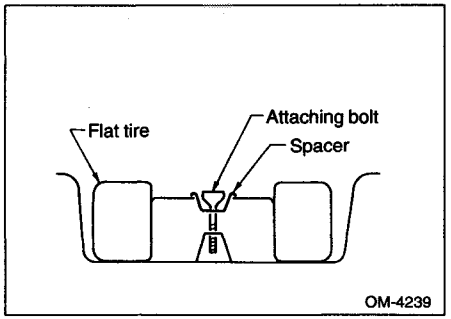

When storing a conventional tire, put the spacer upside down and tighten the attaching bolt firmly.
Also store the jack and wheel nut wrench in their storage locations. See Tire Changing Tools in this section.

■ Temporary spare tire

⚠ WARNING

Never tow a trailer when the temporary spare tire is used. The temporary spare tire is not designed to sustain the towing load. Use of the temporary spare tire when towing can result in failure of the spare tire and/or less stability of the vehicle and may lead to an accident.

Your vehicle has a temporary spare tire. This tire is smaller and lighter than a conventional tire and is designed for emergency use only. Remove the temporary spare tire and re-install the conventional tire as soon as possible because the spare tire is designed only for temporary use.

Check the inflation pressure of the temporary spare tire at **60 psi (420 kPa, 4.2 kg/cm^2)** periodically to keep the tire ready for use.

When using the temporary spare tire, note the following:

- Do not exceed 50 mph (80 km/h).
- Do not put a tire chain on the temporary spare tire. Because of the smaller tire size, a tire chain will not fit properly .
- Do not use two or more temporary spare tires at the same time.
- Do not drive over obstacles. This tire has a smaller diameter, so road clearance is reduced.
- When the wear indicator appears on the tread, replace the tire.

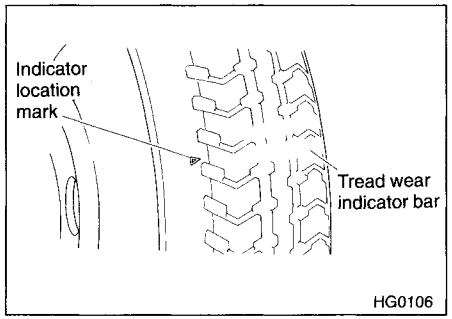

– CONTINUED –

- (If your vehicle is AWD with automatic transmission) Before driving your vehicle with temporary spare tire, put a spare fuse inside the FWD connector located in the engine compartment and confirm that the front-wheel drive warning light comes on. After re-installing the conventional tire, remove the spare fuse from the FWD connector.

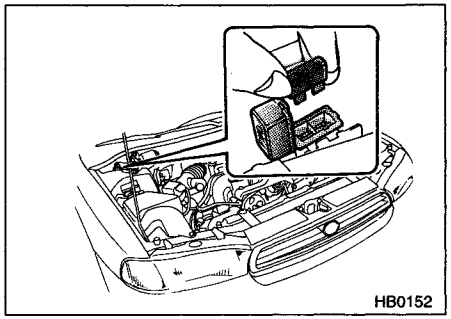

■ Tire changing tools

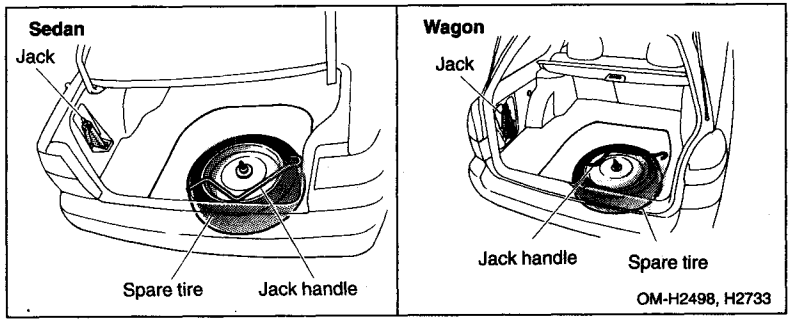

▼ Spare tire

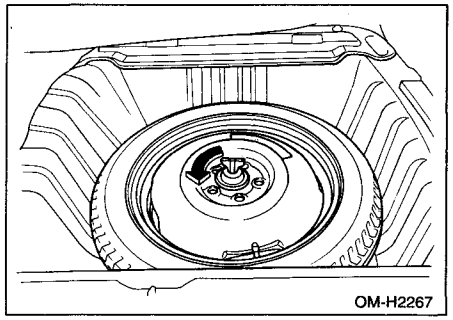

The spare tire is stored under the floor of the trunk or the luggage compartment. To remove the spare tire, first remove the spare tire cover, turn the attaching bolt counterclockwise, then take the spare tire out.

▼ Jack and jack handle

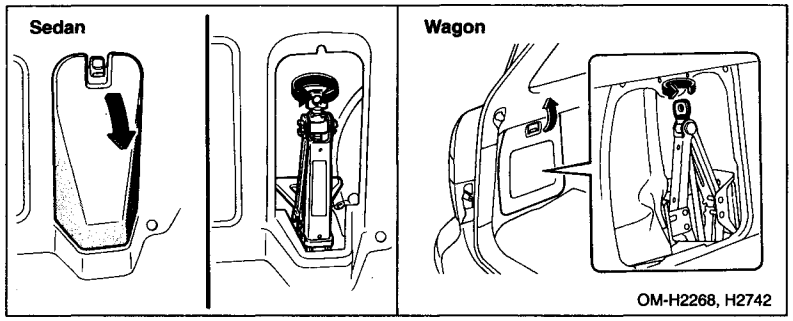

The jack is stored on the left side of the trunk or luggage compartment.

To take out the jack:
Sedan: first pull the tab on the trim cover down to open the cover, turn the jackscrew counterclockwise to loosen it, then remove the jack.
Wagon: first pull the tab on the trim cover to open the cover, turn the jackscrew counterclockwise to loosen it, then remove the jack.

The jack handle is stored under the spare tire cover.