Illustrated index

■ Exterior

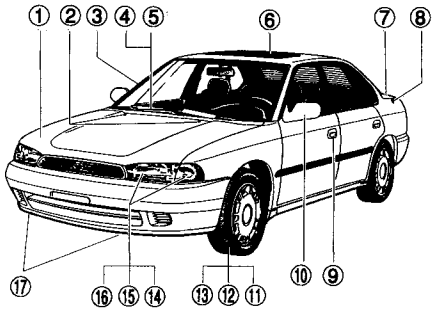

HB0001

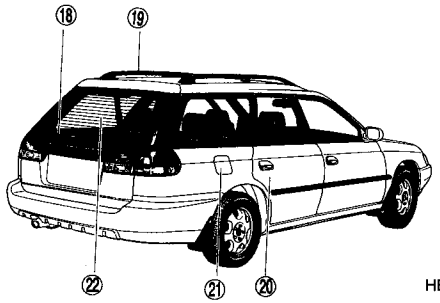

HB0002

① Engine hood (page 1-22)
② Windshield washer (page 3-19)
③ Antenna (page 5-2)
④ Wiper switch (page 3-19)
⑤ Replacement of wiper blade (page 10-33)
⑥ Sunroof (page 1-23)
⑦ Trunk (page 1-16)
⑧ Antenna (page 5-2)
⑨ Locking and unlocking of door (page 1-3)
⑩ Outside mirror (page 3-24)
⑪ Tire chain (page 7-41)
⑫ Replacement of tire (page 10-40)
⑬ Tire inflation pressure (page 10-41)
⑭ Replacement of light bulbs (page 10-51)
⑮ Adjustment of headlight aim (page 10-48)
⑯ Light switch (page 3-12)
⑰ Towing eyelet (page 8-17)
⑱ Rear window wiper and washer (page 3-20)
⑲ Roof rail (Page1-26)
⑳ Child safety lock (page 1-6)
㉑ Fuel filler lid (page 1-20)
㉒ Rear gate (page 1-19)

■ Interior

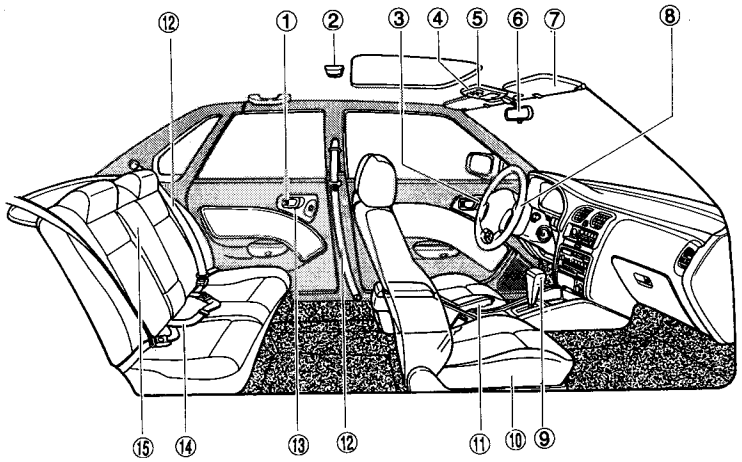

HB0003

① Lock lever (page 1-3)
② Interior light (page 6-10)
③ Power window switch (page 1-11)
④ Spot light (page 6-10)
⑤ Sunroof switch (page 1-24)
⑥ Inside mirror (page 3-23)
⑦ Sun visor (page 6-2)
⑧ Tilt steering wheel (page 7-25)
⑨ Selector lever/Gearshift lever (page 7-18/7-15)
⑩ Front seat (page 2-2)
⑪ Parking brake lever (page 7-31)
⑫ 3-point type seat belt (combination lap/shoulder belts (page 2-11)
⑬ Inside door handle (page 1-5)
⑭ 2-point type seat belt (lap only belt) (page 2-16)
⑮ Rear seat (page 2-6)

– CONTINUED –

■ Luggage compartment

Sedan

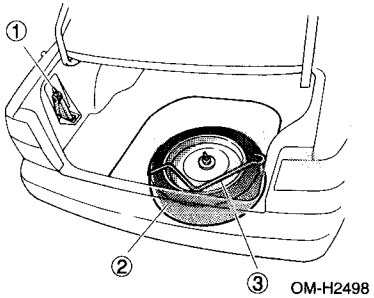

Wagon

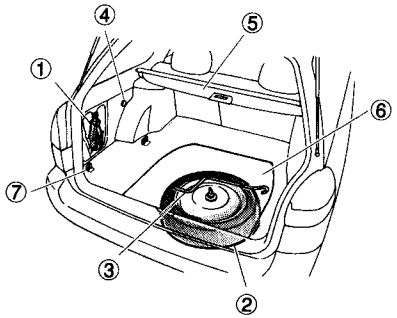

HB0005

① Jack (page 8-13)
② Spare tire (page 8-12)
③ Jack handle (page 8-13)
④ Accessory socket (page 6-6)
⑤ Luggage cover (page 6-12)
⑥ Storage tray (page 6-14)
⑦ Cargo anchorage eyelets (page 6-13)

■ Instrument panel

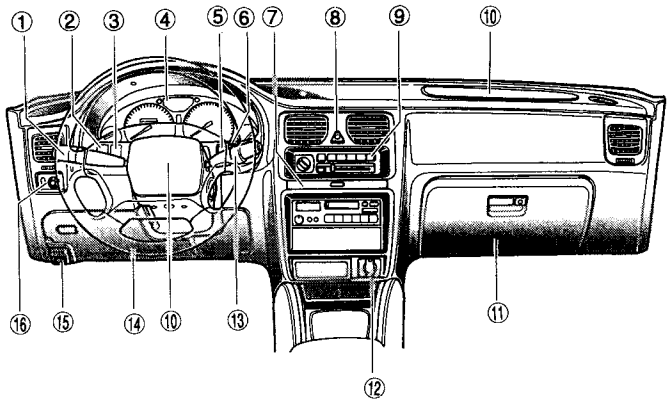

HB0006

① Lighting, turn signal and illumination brightness control switch (page 3-12)
② Security system indicator light (Page 1-8) or TCS OFF switch (page 7-37) (TCS OFF indicator light [Page 7-37])
③ Fog light switch (page 3-16)
④ Combination meter (page 3-4)
⑤ Rear window defogger switch (page 3-22)
⑥ Cruise control main switch (page 7-26)
⑦ Cup holder (page 6-5)
⑧ Hazard warning flasher (page 3-12)
⑨ Heater or air conditioner control (page 4-3)
⑩ SRS AIRBAG (page 2-28)
⑪ Glove compartment (page 6-3)
⑫ Accessory socket (page 6-7)
⑬ Windshield wiper and washer switch (page 3-19)
⑭ Steering (page 7-25)
⑮ Hood lock release (page 1-22)
⑯ Remote control mirror switch (page 3-24)

– CONTINUED –

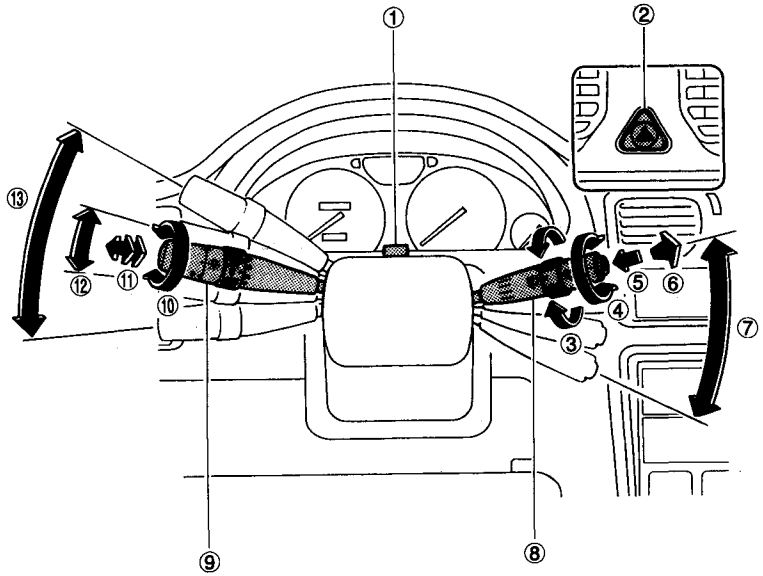

OM-H2500

① Parking light switch (page 3-16)
② Hazard warning flasher switch (page 3-12)
③ Wiper intermittent time control (page 3-19)
④ Rear window wiper and washer switch (page 3-20)
⑤ Windshield washer (page 3-20)
⑥ Mist (page 3-20)
⑦ Windshield wiper (page 3-19)
⑧ Wiper control (page 3-17)
⑨ Light control (page 3-12)
⑩ Headlight ON/OFF (page 3-13)
⑪ Headlight flasher/High/Low beam change (page 3-13)
⑫ Turn signal (for lane change) (page 3-14)
⑬ Turn signal (page 3-14)

■ Instrument panel (Right hand drive vehicles)

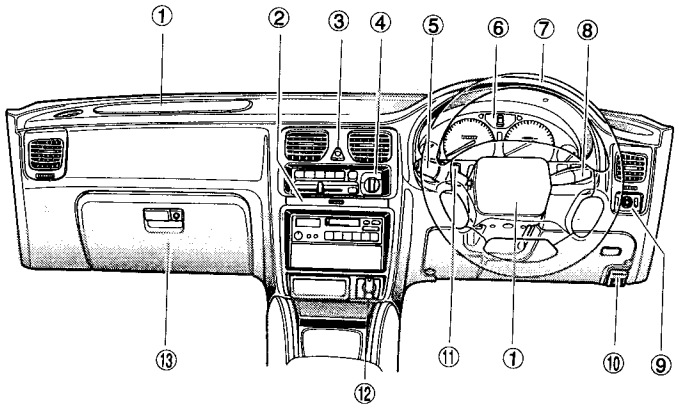

HB0066

① SRS AIRBAG (page 2-28)
② Cup holder (page 6-5)
③ Hazard warning flasher (page 3-12)
④ Heater or air conditioner control (page 4-16)
⑤ Lighting, turn signal and illumination brightness control switch (page 3-12)
⑥ Combination meter (page 3-4)
⑦ Steering (page 7-25)
⑧ Windshield wiper and washer switch (page 3-19)
⑨ Remote control mirror switch (page 3-24)
⑩ Hood lock release (page 1-22)
⑪ Rear window defogger switch (page 3-22)
⑫ Accessory socket (page 6-7)
⑬ Glove compartment (page 6-3)

– CONTINUED –

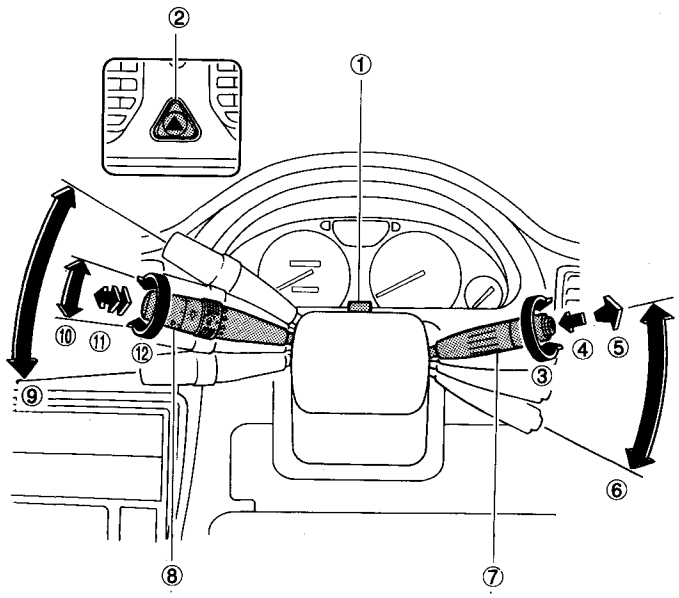

OM-H2502

① Parking light switch (page 3-16)
② Hazard warning flasher switch (page 3-12)
③ Rear window wiper and washer switch (page 3-20)
④ Windshield washer (page 3-20)
⑤ Mist (page 3-20)
⑥ Windshield wiper (page 3-19)
⑦ Wiper control (page 3-17)
⑧ Light control (page 3-12)
⑨ Turn signal (page 3-14)
⑩ Turn signal (for lane change) (page 3-14)
⑪ Headlight flasher/ High/Low beam change (page 3-13)
⑫ Headlight ON/OFF (page 3-13)

■ Combination meter

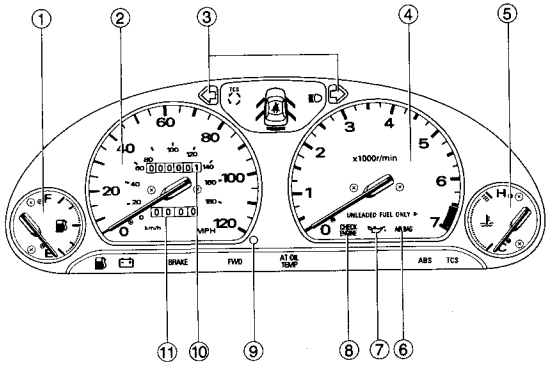

HB0007

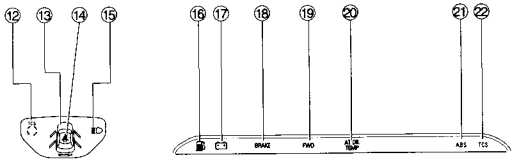

HB0008

① Fuel gauge (page 3-6)
② Speedometer (page 3-5)
③ Turn signal indicator light (page 3-11)
④ Tachometer (page 3-5)
⑤ Temperature gauge (page 3-6)
⑥ SRS AIRBAG warning light (page 3-7)
⑦ Oil pressure warning light (page 3-8)
⑧ CHECK ENGINE warning light/ Malfunction indicator light (page 3-9)
⑨ Trip meter reset knob (page 3-5)
⑩ Odometer (page 3-5)
⑪ Trip meter (page 3-5)
⑫ TCS indicator light (page 3-10)
⑬ Door open warning lights (page 3-11)
⑭ Seatbelt warning light (page 3-7)
⑮ High beam indicator light (page 3-11)
⑯ Low fuel warning light (page 3-11)
⑰ Charge warning light (page 3-8)
⑱ Brake system warning light (page 3-8)
⑲ Front-wheel drive warning light (page 3-11)
⑳ AT oil temperature warning light (page 3-11)
㉑ ABS warning light (page 3-9)
㉒ TCS warning light (page 3-10)