be sure to replace them with genuine SUBARU parts designed for aluminum wheels.

Fuses

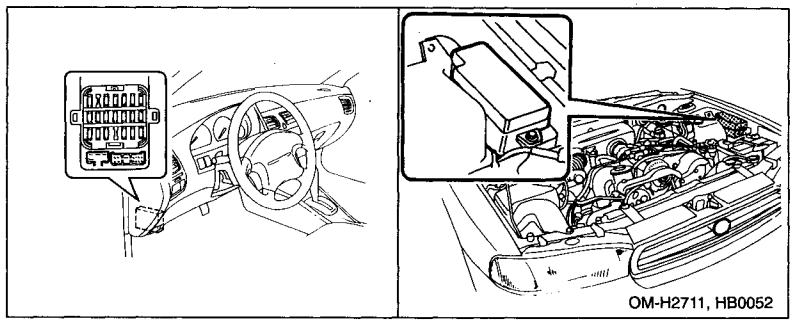

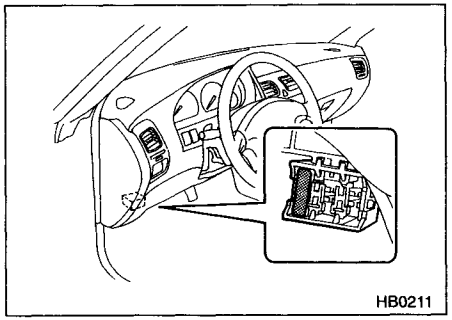

The fuses are designed to melt during an overload to prevent damage to the wiring harness and electrical equipment. The fuses are located in three fuse boxes.
If any lights, accessories or other electrical controls do not operate, inspect the corresponding fuse. If a fuse has blown, replace it.

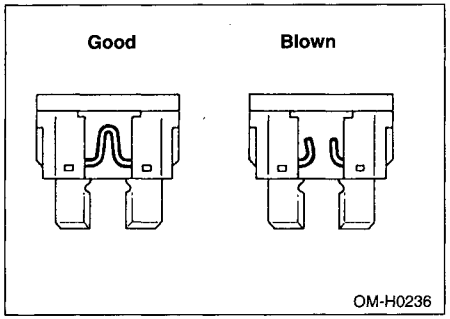

■ Replacing a fuse

⚠ CAUTION
Never replace a fuse with one having a higher rating or with material other than a fuse because serious damage could result.

▼ Fuse box (under the dashbord)

1. Turn the ignition switch to the "LOCK" position and turn off all electrical accessories.
2. Determine which fuse may be blown. The fuse box lids and "Fuse and circuits" in this manual show the circuit for each fuse.
3. Remove the cover from the fuse box.

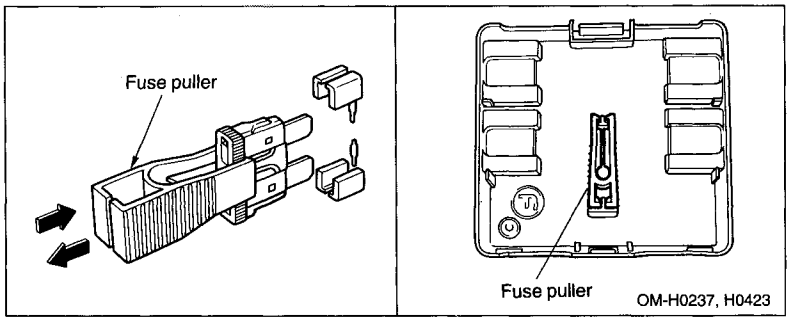

– CONTINUED –

4. Pull out the fuse with the fuse puller provided in the interior fuse box cover.
5. Inspect the fuse. If it has blown, replace it with a spare fuse of the same rating. The spare fuses are stored in the main fuse box in engine compartment.

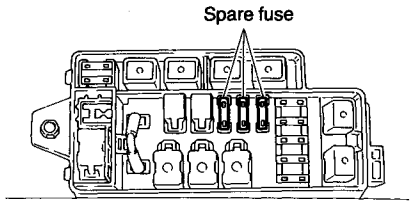

OM-H0424

6. If the same fuse blows again, this indicates that its system has a problem. Contact your SUBARU dealer for repair.

▼ Fuse socket (behind the instrument panel lower cover)

1. Turn the ignition switch to the "LOCK" position and turn off all electrical accessories.
2. Determine which fuse may be blown. Fuse and Circuits section in chapter 11 show the circuit for each fuse.

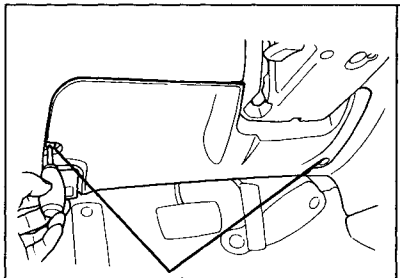

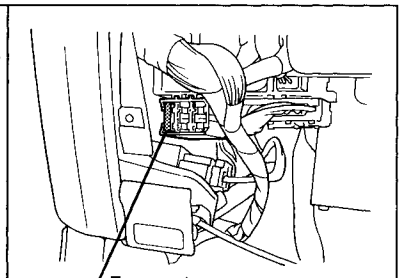

HB0212, HB0216

3. Remove the instrument panel lower cover.

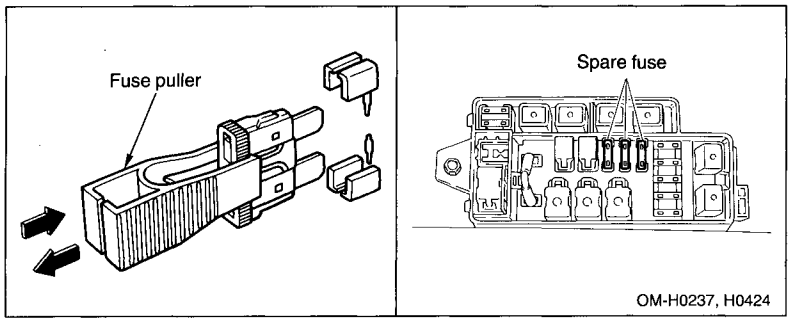

4. Pull out the fuse with the fuse puller provided in the interior fuse box cover.
5. Inspect the fuse. If it has blown, replace it with a spare fuse of the same rating. The spare fuses are stored in the main fuse box in engine compartment.
6. If the same fuse blows again, this indicates that its system has a problem. Contact your SUBARU dealer for repair.

Main fuse and fusible link

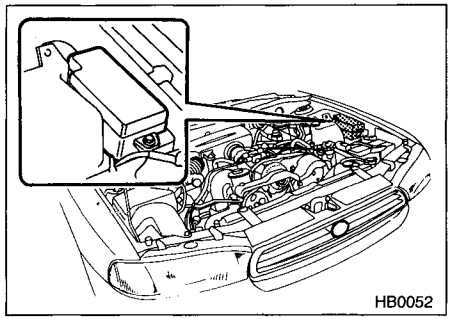

The main fuses and fusible link are designed to melt during an overload to prevent damage to the wiring harness and electrical equipment. Check the main fuses and fusible link if any electrical component fails to

– CONTINUED –