Cooling system, hoses and connections

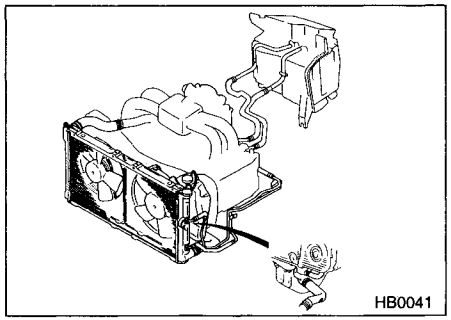

Your vehicle employs an electric cooling fan which is thermostatically controlled to operate when the engine coolant reaches a specific temperature.
If the radiator cooling fan does not operate even when the engine coolant temperature gauge exceeds the normal operating range, the circuit of the cooling fan may be defective. Check the fuse and replace it if necessary. If the fuse is not blown, have the cooling system checked by your SUBARU dealer.

If frequent addition of coolant is necessary, there may be a leak in the engine cooling system. It is recommended that the cooling system and connections be checked for leaks, damage, or looseness.

Engine coolant

■ Checking the coolant level

⚠ WARNING
Never attempt to remove the radiator cap until the engine has been shut off and has cooled down completely. Since the coolant is under pressure, you may suffer serious burns by a spray of boiling hot coolant when the cap is removed.

Check the coolant level at each fuel stop.

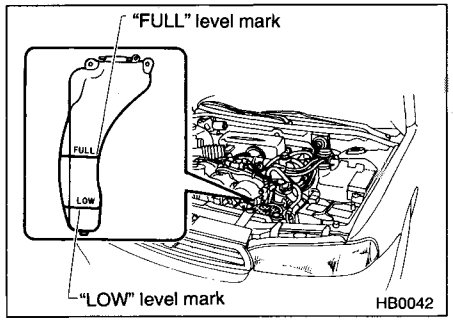

1. Check the coolant level on the outside of the reservoir while the engine is cool.
2. If the level is close to or lower than the "LOW" level mark, add coolant up to the "FULL" level mark. If the reserve tank is empty, remove the radiator cap and refill as required.

⚠ CAUTION

- **The cooling system has been filled at the factory with a high quality, corrosion-inhibiting, year-around coolant which provides protection against freezing down to –33°F (–36°C). For adding, use genuine SUBARU coolant or an equivalent: a mixture of 50% soft water and 50% ethylene-glycol basis coolant. Use of improper coolants may result in corrosion in the cooling system. It is important to maintain protection against freezing and corrosion, even if freezing temperatures are not expected. Never mix different kinds of coolant.**
- **Do not splash the engine coolant over painted parts. The alcohol contained in the engine coolant may damage the paint surface.**

– CONTINUED –

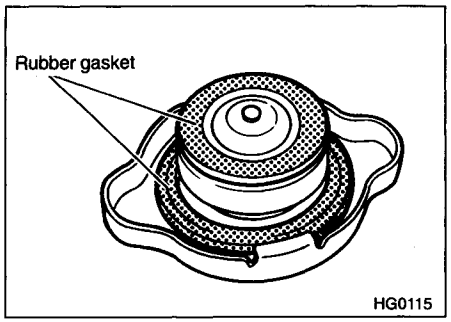

3. After refilling the reserve tank and the radiator, reinstall the caps and check that the rubber gasket inside the radiator cap is in the proper position.

■ Changing the coolant

⚠ WARNING

Never attempt to remove the radiator cap until the engine has been shut off and has cooled down completely. Since the coolant is under pressure, you may suffer serious burns by a spray of boiling hot coolant when the cap is removed.

⚠ CAUTION

- **The cooling system has been filled at the factory with a high-quality, corrosion-inhibiting, year-around coolant which provides protection against freezing down to –33°F (–36°C). Use the recommended coolant only. Use of improper coolants may result in corrosion in the cooling system. It is important to maintain protection against freezing and corrosion, even if freezing temperatures are not expected. Never mix different kinds of coolant.**
- **Do not splash the engine coolant over painted parts. The alcohol contained in the engine coolant may damage the paint surface.**

Change the engine coolant in the following procedures according to the maintenance schedule in the warranty and maintenance booklet.

1. Place a proper container under the drain plug and loosen the drain plug.

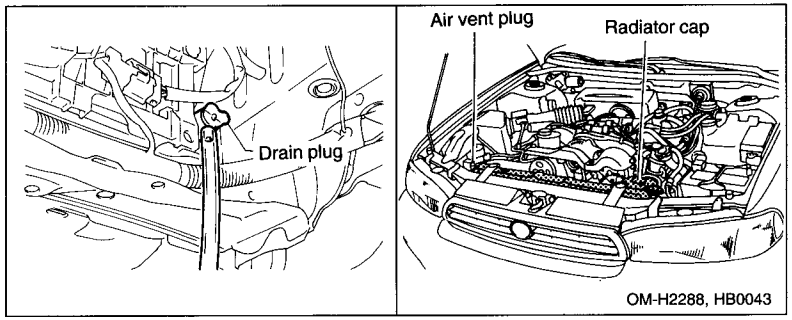

2. Loosen the radiator cap to drain the coolant from the radiator. Then drain the coolant from the reserve tank. Tighten the drain plug securely.

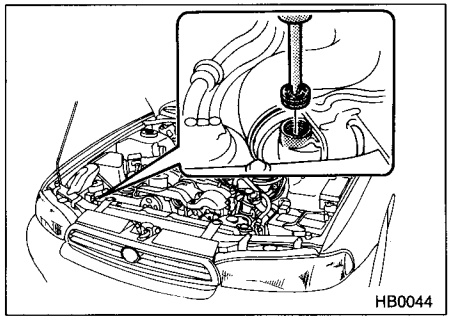

3. Remove the air vent plug from the radiator.

– CONTINUED –

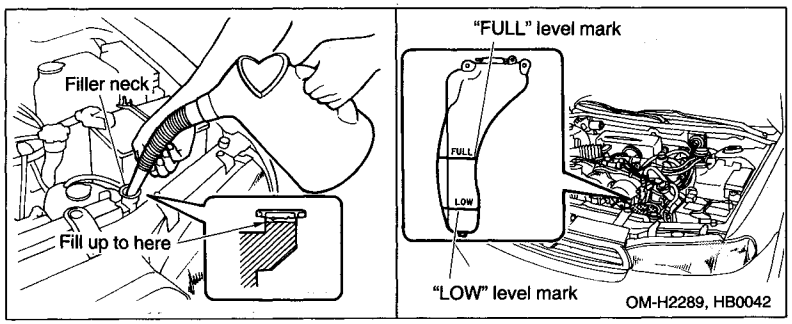

4. Slowly pour the coolant and fill to the radiator filler neck and to the reserve tank's "FULL" level mark. Do not pour the coolant too quickly, as this may lead to insufficient air bleeding and trapped air in the system.

Coolant capacity
2.2 Liter models: 6.2 US qt (5.8 liters, 5.2 Imp qt)
2.5 Liter models: 6.3 US qt (6.0 liters, 5.3 Imp qt)

---

5. Put the air vent plug back on and tighten firmly.

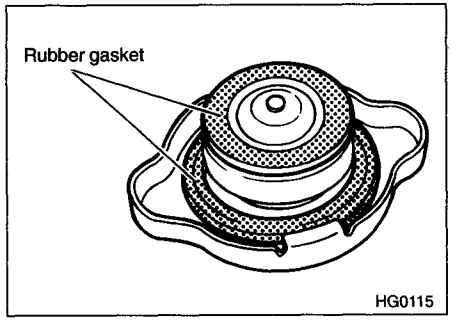

6. Put the radiator cap back on and tighten firmly. At this time, make sure that the rubber gasket in the radiator cap is correctly in place.
7. Start and run the engine for more than five minutes at 2,000 to 3,000 rpm.

8. Stop the engine and wait until the coolant cools down (122 to 140°F [50 to 60 °C]). If there is any loss of coolant, add coolant to the radiator's filler neck and to the reserve tank's "Full" level.
9. Put the radiator cap and reservoir cap back on and tighten firmly.

Air cleaner element

⚠ WARNING
Do not operate the engine with the air cleaner element removed. The air cleaner element not only filters intake air but also stops flames if the engine backfires. If the air cleaner element is not installed when the engine backfires, you could be burned.

The air cleaner element functions as a filter screen. When the element is perforated or removed, engine wear will be excessive and engine life shortened.

The air cleaner element is a viscous type. It is unnecessary to clean or wash the element.

■ Replacing the air cleaner element

Replace the air cleaner element according to the maintenance schedule in the warranty and maintenance booklet. Under extremely dusty conditions, replace it more frequently. It is recommended that you always use genuine SUBARU parts.

– CONTINUED –